www.cargeek.ir

Service Manual 2015

MG GS

This manual provides information on the specifications, the system introduction, the service procedures and the adjustments for the 2015 series MG GS Vehicle.

The technicians, worked for the servicing station authorized by SAIC Motor Passenger Vehicle Co., Ltd., can provide better service for the owners of MG GS vehicle based on a profound understanding this manual and related updated Service Bulletins.

You are suggested that please contact SAIC Motor Passenger Vehicle Co., Ltd. if you want to obtain related information mentioned in this manual about the brand, the parts number, and special tools etc.

www.cargeek.ir

SAIC Motor Passenger Vehicle Co., Ltd.

Copy Right Reserved

All information received cutoff date is March 2015

Any information contained in this manual are the property of the SAIC Motor Passenger Vehicle Co., Ltd.. No part of this manual may be copied, stored in any retrieval system, or spread by any means (including but not limited in electronic, mechanical, photocopying and recording) without written SMC authorization. This applies to all text, illustrations, and tables (not limited in above) mentioned in this manual.

www.cargeek.ir

www.cargeek.ir

How To Use This Manual

General

To assist in the use of this Manual, it is divided into sections and sub-sections. The relevant sub-section title is given at the header of each page.

There is a single Contents section at the front of the Manual, which is divided by section and sub-section. The book is numbered from page 1. The page number is given at the bottom of each page.

The individual actions of the repair operations must be followed in the sequence in which they appear. Item numbers in the illustrations refer to the relevant numbered text under the illustration.

Adjustment and repair operations include reference to Service tool numbers and the associated illustration depicts the tool in use. Adjustment and repair operations also include reference to wear limits, relevant data, torque figures, and specialist information and useful assembly details. Each adjustment or repair operation is given a unique Repair Operation number.

WARNINGS, CAUTIONS, NOTES and TIPS have the following meanings:

When encountering a WARNING, you will be asked to take a necessary action or not to take a prohibited action. If a WARNING is not heeded, the following consequences may occur:

- Serious bodily injury or death to the technician.
- Serious bodily injury or death to other technicians in the workplace area.
- Serious bodily injury to the driver and/or passenger(s) of the vehicle, if the vehicle has been improperly repaired.

CAUTION call special attention to a necessary action or to a prohibited action. If a CAUTION is not heeded, the following consequences may occur:

- Damage to the vehicle.
- Unnecessary vehicle repairs.
- Unnecessary component replacement.
- Improper operation or performance of the system or component under repair.
- Damage to any systems or components which are dependent upon the proper operation of the system or component under repair.
- Improper operation or performance of any systems or components which are dependent upon the proper operation or performance of the system or component under repair.
- Damage to fasteners, basic tools, or special tools.
- The leakage of coolant, lubricant, or other vital fluids.

NOTE statements emphasize a necessary characteristic of a diagnostic or repair procedure. NOTE statements are designed to do the following:

- Clarify a procedure.
- Present additional information for accomplishing a procedure.
- Give insight into the reason or reasons for performing a procedure in the manner recommended.
- Present information that will help to accomplish a procedure in a more effective manner.
- Present information that gives the technician the benefit of past experience in accomplishing a procedure with greater ease.

TIP: Gives helpful information.

References

References to the LH or RH side given in this Manual are made when viewing the vehicle from the rear. With the engine and gearbox assembly removed, the crankshaft pulley end of the engine is referred to as the front.

Operations covered in this Manual do not include reference to testing the vehicle after repair. It is essential that work is inspected and tested after completion and if necessary a road test of the vehicle is carried out. This is of particular importance where safety related items are concerned.

Dimensions

The dimensions quoted are to design engineering specification. Service limits are included where applicable.

Our company are constantly seeking to improve the specification, design and production of their vehicles and alterations take place accordingly. While every effort has been made to ensure the accuracy of this Manual, it should not be regarded as an infallible guide to current specifications of any particular vehicle.

www.cargeek.ir

www.cargeek.ir

Repairs and Replacements

Parts

When replacement parts are required it is essential that only our company's recommended parts are used.

Attention is particularly drawn to the following points concerning repairs and the fitting of replacement parts and accessories.

- Safety features and corrosion prevention treatments embodied in the vehicle may be impaired if other than SMC recommended parts are fitted.
- Torque wrench setting figures given in this Manual must be used.
- Locking devices, where specified, must be fitted. If the efficiency of a locking device is impaired during removal it must be renewed.
- The terms of the vehicle warranty may be invalidated by the fitting of parts other than SMC recommended parts.

All SMC recommended parts have the full backing of the vehicle warranty.

SMC Dealers are obliged to supply only SMC recommended parts.

Special tools

Special tools have been developed to facilitate removal, dismantling and assembly of mechanical components in a cost effective and time efficient manner. The use of special tools also helps prevent the potential for damage to components.

Some operations in the manual cannot be carried out properly without the aid of the relevant special tools.

Special tools can be obtained from the following supplier.

Shanghai Xiangzhi Industrial Development Co., Ltd

Address: 17F, Building C, No.900, Yishan Road, Shanghai

Post Code: 200233

Tel: 021-54234810

www.cargeek.ir

www.cargeek.ir

Contents

General Information 1

General Information 1

General Precautions 1
Safety Instructions 2
Environmental Precautions 3
General Fitting Instructions 5
Ball and Roller Bearings 6
Oil Seals 7
Joints and Joint Faces 8
Locking Devices 8
Screw Threads 9
Fasteners Identification 9
Flexible Pipes and Hoses 11
Fuel Handling Precautions 12
Electrical Precautions 13
Supplementary Restraint System Precautions 14
SRS Component Replacement Policy 20
Air Conditioning System Precautions 21
Air Conditioning Compressor Replacement 23

Lifting & Towing 24

Lifting Vehicle 24
Roadside Assistance 25

Vehicle Identification Number 26

Vehicle Identification Number 26
Position of Other Plates 27

Lubrication & Maintenance 29

Capacity 29
Fluid 29
Lubricating Fluids 30

Engine 31

Engine mechanical system-2.0T 31

Specifications 31
Torque 31
Parameters 34
Description and Operation 40
System Layout 40
Description 60
Operation 62
Service Procedures 64
Mechanical Vacuum Pump 64
Oil Control Valve 64
CVVT Cover 65
Thermostat Housing 65
Intake/Exhaust Phase Modulator 66
Oil-gas Separator 67
Cylinder Head Check 68
Crankshaft Check 72
Connecting Rod Bearing Shell Check 76
Piston Check 77
Rear Crankshaft Oil Seal 79
Front Crankshaft Oil Seal 80
Flywheel - Dual Clutch Automatic Transmission 81
Valve 82
Valve Hydraulic Tappet Assembly 85
Camshaft Cover 86
Camshaft - Intake or Exhaust 89
Intake Manifold Gasket 90
Exhaust Manifold Gasket 92
Oil Pump 93
Engine Oil and Oil Filter 94
Engine Oil Pressure Check 95
Oil Strainer 95
Oil Pan 96
Lower Crankcase 97
Front Timing Cover 99
Engine Timing Chain 101
Crankshaft Torsional Vibration Damper 104
Right Hydraulic Engine Suspension 104
Engine and Dual Clutch Automatic Transmission 106
Cylinder Gasket 109
Turbocharger 111
Turbocharger Coolant Outlet Pipe 114
Turbocharger Coolant Inlet Pipe 115
Turbocharger Oil Return Pipe 117
Turbocharger Air Intake Hose 118
Turbocharger Oil Inlet Pipe 118
Electronic Throttle Intake Pipe 119
Intercooler Air Inlet Hose 120
Oil Filter Module 120
Special Tools 122

Engine mechanical system-1.5T 124

Specifications 124
Torque 124
Parameter 126
Description and Operation 131
System Layout 131

www.cargeek.ir

Contents

Description 149
Operation 151
Diagnostic 153
Symptoms - Engine Mechanical System 153
Engine Misfire, and No Internal Noise 154
Engine Misfire, and Abnormal Noise Found Below Internal Engine 156
Engine Misfire, and Abnormal Noise Found in Valve System 157
Engine Misfire with Coolant Consumption 158
Engine Misfire with Excessive Oil Consumption 159
Engine Noise on Start-Up, but Only Lasting a Few Seconds 160
Upper Engine Noise, Regardless of Engine Speed 161
Lower Engine Noise, Regardless of Engine Speed 162
Engine Noise Under Load 163
Engine Unable to Start - Crankshaft Not Rotate 164
Ingress of Coolant into Combustion Chamber 165
Ingress of Coolant into Engine Oil 166
Engine Compression Pressure Test 167
Cylinder Leak Test 167
Oil Consumption Diagnosis 169
Engine Oil Pressure Diagnosis and Test 170
Engine Oil Leak Diagnosis 171
Crankcase Ventilation System Inspection/Diagnosis 173
Service Procedures 174
Powertrain Disassembly and Assembly - MT 174
Powertrain Disassembly and Assembly - AT 176
Powertrain Mount 179
Flywheel - MT 180
Flywheel - AT 181
Cylinder Head 182
Cylinder Block 184
Crankshaft 185
Lower Crankcase 187
Oil Pan 188
Camshaft Cover 190
Crankshaft Vibration Damper 191
Front Timing Cover 192
Intake and Exhaust Valves 193
Timing Chain 194
Camshaft Phase Regulation Actuator 196
Timing Chain Tensioner 197
Crankshaft Sprocket 197
Camshaft 198
Hydraulic Tappets 199
Intake Manifold 200
Piston 201
Connecting Rod 202
Oil Pump 204
Engine Oil Strainer 205
Front Crankshaft Oil Seal 205
Rear Crankshaft Oil Seal 206
Vacuum Pump 206
Seal-Vacuum Pump 207
Turbocharger 208
Turbocharger Fuel Inlet Pipe 209
Turbocharger Oil Return Pipe 210
Turbocharger Water Inlet Pipe 211
Turbocharger Water Return Pipe 211
Water Outlet Assembly 212
Oil Cooler 213
Cylinder Head Check 213
Valve Mechanism Check 218
Piston Connecting Rod Check 221
Cylinder Block Check 224
Crankshaft Check 226
Engine Oil Filter 229
Special Tools 231
Engine Cooling System 233
Specifications 233
Torque 233
Parameters 234
Description and Operation 236
System Layout 236
Description 242
Operation 244
Service Procedures-2.0T 248
Coolant - Drain and Refill 248
Expansion Tank Cap - Pressure Test 249
System Pressure Test 250
Coolant Expansion Tank 251
Radiator Inlet Pipe 252

www.cargeek.ir

www.cargeek.ir

Contents

Radiator Outlet Pipe 252
Heater Water Inlet Pipe 253
Heater Water Outlet Pipe 254
Expansion Water Tank Outlet Pipe 254
Engine Overflow Pipe A 255
Engine Overflow Pipe B 256
Cooling Fan Assembly 256
Cooling Fan Low Speed Resistance 257
Radiator Assembly 258
2.0T Intercooler 259
Radiator Airflow Side Deflector - Left Upper 261
Radiator Airflow Side Deflector - Left Lower 261
Radiator Airflow Side Deflector - Right Upper 262
Radiator Airflow Side Deflector - Right Lower 262
Transmission Outlet Hose 263
Transmission Inlet Hose 264
Thermostat 265
Clutch Water Pump 266
Electronic Auxiliary Pump 267
Service Procedures-1.5T 268
Coolant - Drain and Refill 268
Expansion Tank Cap - Pressure Test 269
System Pressure Test 270
Coolant Expansion Tank 270
Remove 270
Refit 271
Radiator Inlet Pipe 272
Radiator Outlet Pipe 272
Heater Water Inlet Pipe 273
Heater Water Outlet Hose 274
Engine Overflow Pipe 275
Radiator Overflow Pipe 275
Cooling Fan Assembly 276
Coolant Fan Low Speed Resistor 277
Radiator Assembly 278
1.5T Intercooler 278
Radiator Airflow Side Deflector - Left Upper 280
Radiator Airflow Side Deflector - Left Lower 280
Radiator Airflow Side Deflector - Right Upper 281
Radiator Airflow Side Deflector - Right Lower 281
Thermostat 282
Mechanical Water Pump 282
Special Tools 284
Engine Fuel & Management System 285
Specifications 285
Torque 285
Description and Operation 286
System Layout 286
Description 288
Service Procedures 289
Canister 289
Underfloor Fuel Pipe - 2.0T 289
Underfloor Fuel Pipe-1.5T 290
Rubber Fuel Pipe 292
Fuel Tank Heat Shield - AWD 292
Fuel Tank - 2WD 293
Fuel Tank - AWD 294
Fuel Pump - 2WD 295
Fuel Pump - AWD 296
Fuel System - Pressure Release - 2.0T 297
Fuel System - Pressure Release-1.5T 298
Fuel System - Pressure Test - 2.0T 298
Fuel System - Pressure Test - 1.5T 299
Fuel Tank - Drain 300
Fuel Tank Filler Pipe 300
Fuel Filter 301
Special Tools 302
Engine Control System-2.0T 303
Specifications 303
Torque 303
Description and Operation 304
System Layout 304
System Control Diagram 305
Description 307
Service Procedures 325
Spark Plug 325
Ignition Coil 325
Engine Control Module (ECM) 326
ECT Sensor 327
Intake Camshaft Position Sensor 327
Exhaust Camshaft Position Sensor 328
Oil Pressure Switch 328
Hot Film Meter (HFM) 329
High-pressure Fuel Pump 329

www.cargeek.ir

Contents

Fuel Rail Pressure Sensor 331
Crankshaft Position Sensor 331
Intake Air Temperature/Manifold Absolute Pressure Sensor..... 332
Manifold Absolute Pressure/Temperature Sensor 332
Knock Sensor..... 333
Heated Oxygen Sensor - Front 333
Heated Oxygen Sensor - Rear..... 334
Turbocharger Solenoid Valve..... 334
Fuel Rail..... 335
Injector..... 336
Canister Solenoid..... 337
Special Tools 338
Engine Control System-1.5T 339
Specifications 339
Torque 339
Parameter 339
Description and Operation..... 342
System Layout 342
System Control Diagram 345
Description 347
Operation 358
Service Procedures..... 359
Fuel Pump..... 359
Fuel Rail..... 360
Fuel Injector..... 361
Spark Plug..... 361
Engine Control Module (ECM) 362
Ignition Coil 363
Crankshaft Position Sensor 363
Engine Coolant Temperature Sensor..... 364
Manifold Absolute Pressure Sensor..... 364
Camshaft Position Sensor 365
Camshaft Phase Adjustment Solenoid Valve..... 365
Oil Pressure Sensor..... 366
Knock Sensor..... 366
Oxygen Sensor..... 367
Canister Solenoid..... 368
Turbocharger Electrically Controlled Bypass Valve..... 368
Turbocharger Relief Valve 369
Intake Air Temperature and Pressure Sensor 370
Special Tools 371
Engine Electrical System-2.0T 372
Specifications 372
Torque 372
Description and Operation..... 373
System Layout 373
System Control Diagram..... 374
Description 376
Operation 379
Service Procedures..... 380
Alternator..... 380
Auxiliary Drive Belt..... 381
Starter Motor 382
Automatic Tensioning Wheel - Auxiliary Drive Belt 382
Battery Negative Cable..... 383
Battery Positive Cable..... 383
Battery..... 384
Battery Sensor 385
Special Tools 386
Engine Electrical System-1.5T 387
Specifications 387
Torque 387
Description and Operation..... 388
System Layout 388
Description 389
Service Procedures..... 391
Alternator..... 391
Starter Motor 391
Auxiliary Drive Belt..... 392
Auxiliary Drive Belt Tensioner..... 392
Engine Accessory Belt Abnormal Noise Diagnosis 392
Engine Accessory Belt Vibration Diagnosis 396
Accessory Belt Failure Diagnosis 398
Drive Belt Tensioner Diagnosis..... 399
Battery Negative Cable..... 400
Battery Positive Cable..... 401
Battery..... 402
Special Tools 403
Engine Manifold & Exhaust System-2.0T 404
Specifications 404
Torque 404
Description and Operation..... 405
System Layout 405
Description 408

www.cargeek.ir

www.cargeek.ir

Contents

Operation 409
Service Procedures 410
Electronic Throttle Self-learning - UMC System 410
Electronic Throttle - with Adjustment 410
Air Filter Assembly 411
Air Filter Element 412
Rear Muffler Assembly 412
Catalytic Converter 413
Front Exhaust Pipe 414
Heat Shield - Rear Muffler 415
Heat Shield - Exhaust Passage 415

Engine Manifold & Exhaust System-1.5T 416
Specifications 416
Torque 416
Description and Operation 417
System Layout 417
Description 421
Operation 422
Service Procedures 423
Electronic Throttle Self-learning - UMC System 423
Air Filter Assembly 423
Air Filter Element 424
Electronic Throttle 424
Rear Muffler Assembly 425
Three-way Catalytic Converter 425
Front Exhaust Pipe 427
Heat Shield - Rear Muffler Assembly 428
Heat Shield - Exhaust Passage 428
Hose - Turbocharger to Intercooler 429
Hose - Turbocharger Intercooler to Throttle Body 429

Transmission 431

Shift Lock Control-6 Speed Auto 431
Specifications 431
Torque 431
Description and Operation 432
System Control Diagram 432
Description 433
Operation 436
Service Procedures 437
Shift Lever Knob and Gear Display Panel - Dual Clutch Automatic Transmission 437
Shifter Assembly - Dual Clutch Automatic Transmission 438
Shift Lever P Gear Emergency Unlocking - Dual Clutch Automatic Transmission 439
Parking Cable Inspection and Adjustment - Dual Clutch Automatic Transmission 439
Gear Indicator 440

Shift Lock Control-7 Speed Auto 442
Description and Operation 442
System Layout 442
Description 443
Service Procedures 444
Shift Lever Knob and Sleeve Assembly 444
Shift Lever Assembly 445
Gear Panel 446
Gear Cable 447

Shift Lock Control-6MT 448
Description and Operation 448
System Layout 448
Service Procedures 449
Shift Lever Ball Head and Sleeve Assembly-Manual 449
Shift Lever Assembly - Manual 450

Twin-Clutch Sportronic Transmission-6 Speed 452
Specifications 452
Torque 452
Parameters 453
Description and Operation 454
System Layout 454
System Control Diagram 462
Description 465
Operation 478
Service Procedures 488
Dual Clutch Automatic Transmission 488
TCM - Dual Clutch Automatic Transmission 491
Dual Clutch Automatic Transmission Fluid - Drain and Refill 491
Dual Clutch Automatic Transmission Fluid - Fluid Level Check and Refill 492
Differential Oil Seal - Transmission Housing 494
Differential Oil Seal -Clutch Housing 494
Pressure Filter 495
Parking Brake Cable Bracket 496
Parking Brake Cable Shaft Rocker Arm 496

www.cargeek.ir

Contents

Oil Seal - Parking Brake Cable Shaft 497
Reverse Gear Shaft Sealing Cap 498
Special Tools 499
Dry Dual Clutch Automatic Transmission-7 Speed 500
Specifications 500
Torque 500
Parameter 502
Description and Operation 503
System Layout 503
System Control Diagram 519
Description 521
Operation 529
Service Procedures 553
Dry Dual Clutch Automatic Transmission Oil - Drain and Refill 553
Dry Dual Clutch Automatic Transmission Oil - Check and Refill 554
Dry Dual Clutch Automatic Transmission Assembly 556
Dry Dual Clutch Automatic Transmission Harness 558
Transmission Control Module (TCM) - Dry Dual Clutch Automatic Transmission 559
Transmission Electro-Hydraulic Control Assembly 560
Fork Position Sensor Assembly 562
Input Speed Sensor Assembly 563
Transmission Electro-Hydraulic Control Assembly Harness 563
Dual Clutch Assembly - Dry Dual Clutch Automatic Transmission 564
Clutch Actuator Cylinder Assembly - Dry Dual Clutch Automatic Transmission 566
Shift Shaft Oil Seal - Transmission Housing 567
Input Shaft Housing Oil Seal - Clutch Housing 568
Differential Oil Seal - Transmission Housing 568
Differential Oil Seal - Clutch Housing 569
Dry Dual Clutch Automatic Transmission Disassembly 570
246R Input Shaft Oil Seal 577
Input Shaft Assembly Disassembly 578
1267 Output Shaft Assembly 579
345R Output Shaft Assembly 580
Differential Assembly 580
Transmission Failure Diagnosis 582
Special Tools 589
Transmission-6MT 593
Specifications 593
Torque 593
Parameter 594
Description and Operation 596
System Layout 596
Description 605
Operation 607
Service Procedures 616
Manual Transmission Assembly 616
Gear Shift Control Mechanism Assembly 618
Manual Transmission Fluid - Drain and Refill 620
Reverse Lamp Switch - Manual 621
Left Differential Oil Seal - Manual 621
Right Differential Oil Seal - Manual 622
Manual Transmission Remove 622
Differential Assembly 625
Transmission Accessories and Release Mechanism 626
Input Shaft Assembly 628
Output Shaft Assembly 1 629
Output Shaft Assembly 2 632
Reverse Idler Shaft Assembly 634
Neutral Position Sensor 635
Special Tools 636
Cluth-6MT 638
Specifications 638
Torque 638
Parameter 639
Description and Operation 640
System Layout 640
Description 641
Operation 643
Service Procedures 644
Clutch Assembly 644
Clutch Central Release Cylinder 646
Clutch Pipeline System Bleeding 647
Clutch Master Cylinder 647
Special Tools 649
Power Transfer Unit -AWD 650
Specifications 650
Torque 650
Parameters 651

www.cargeek.ir

www.cargeek.ir

Contents

Description and Operation 652
System Layout 652
Description 654
Operation 656
Service Procedures 657
PTU Assembly 657
Right Oil Seal - PTU Assembly 658
O Ring - PTU Assembly 659
Drain and Refill 659
PTU Assembly Oil Check and Refill 660
Breather Plug 660
Special Tools 661
Final Drive Unit-AWD 662
Specifications 662
Torque 662
Parameters 663
Description and Operation 664
System Layout 664
System Control Diagram 666
Description 667
Operation 669
Service Procedures 672
Rear Axle Assembly 672
Torque Control 673
Harness - Torque Control 674
FDU Input Shaft Oil Seal 674
4WD Control Module (**TCCM**) 675
Right Oil Seal - Rear Axle Assembly 676
Left Oil Seal - Rear Axle Assembly 676
Drain and Refill - Rear Axle 677
FDUFluid Check and Refill 677
Breather Plug 678
Special Tools 679
HVAC System 681
HVAC System 681
Specifications 681
Torque 681
Parameters 682
Description and Operation 683
System Layout 683
Description 685
Operation 690
Service Procedures 692
Refrigerant Recovery and Refill 692
Whether the Refrigerant Refilling is Successful 693
Compressor 694
Compressor–1.5T 695
Compressor Bracket-1.5T 696
Evaporator 696
Expansion Valve 697
Condenser 697
A/C Pressure Sensor 698
A/C Pipe - Compressor/Condenser 699
A/C Pipe A - Evaporator Compressor 700
A/C Pipe B - Evaporator Compressor 701
A/C Filter Cover 702
Air Filter Element 703
Heater Assembly 703
Blower 705
Heater Core 705
Blower Speed Regulation Resistance 706
Left Floor Vent Pipe 707
Right Floor Vent Pipe 707
Left Body Relief Valve 708
Right Body Relief Valve 708
Instrument Face Air Outlet Pipe 709
Left Instrument Defroster Air Outlet Pipe 709
Right Instrument Defroster Air Outlet Pipe 710
Central Instrument Defroster Air Outlet Pipe 710
Special Tools 711
HVAC System-MTC 712
Description and Operation 712
System Layout 712
System Control Diagram 714
Description 715
Operation 716
Service Procedures 717
A/C Controller Assembly - MTC 717
A/C panel - MTC 718
Mode Damper Cable 718
Temperature Damper Cable 719
Special Tools 720
HVAC System-ATC 721
Specifications 721
Torque 721
Description and Operation 722

www.cargeek.ir

Contents

System Layout 722
System Control Diagram..... 724
Description 725
Operation 728
Service Procedures..... 730
A/C Controller Assembly - **ATC** 730
A/C Panel - **ATC** 730
Evaporator Core Temperature Sensor 731
Solar Sensor..... 732
Outside Ambient Temperature Sensor 732
Interior Ambient Temperature Sensor 733
Face Air Outlet Temperature Sensor 733
Footwell Air Outlet Temperature Sensor 734
Blend Damper Servo Motor..... 734
Servo Motor of Recirculated Air Damper 735
Mode Damper Servo Motor..... 735
Special Tools 736

Steering System 737

Front Wheel Steering 737
Specifications 737
Torque 737
Parameters..... 738
Description and Operation..... 739
System Layout 739
Description 741
Operation 743
Service Procedures..... 744
Steering Gear Assembly..... 744
Steering Gear Boot 745
Steering Gear Outer Tie Rod 746
Steering Gear Inner Tie Rod 747
Special Tools 748

Steering Wheel and Column 749
Specifications 749
Torque 749
Description and Operation..... 750
System Layout 750
System Control Diagram..... 751
Description 752
Service Procedures..... 753
Steering Wheel Positioning/Adjustment 753
Steering Wheel Assembly 753
Blank Trim Cover of Steering Wheel Switch..... 755
Steering Wheel Finisher..... 755
Steering Column Trim Cover 756
Steering Column Assembly 756
Steering Wheel Entertainment Button 758
Shift Paddle Switch..... 758
Steering Column Combination Switch..... 759
Special Tools 761

Suspension System..... 763

Wheel Alignment.....763
Specifications 763
Torque 763
Parameters..... 764
Description and Operation..... 765
Description 765
Service Procedures..... 768
Four-wheel Alignment..... 768

Front Suspension 770
Specifications 770
Torque 770
Parameters..... 771
Description and Operation..... 772
System Layout 772
Description 775
Service Procedures..... 777
Front Lower Swing Arm Assembly 777
Front Lower Swing Arm Outer Ball Joint..... 778
Front Lower Swing Arm Rear Bush 778
Front Shock Absorber Assembly 779
Front Subframe Assembly 781
Front Subframe Support Rod 782
Front Horizontal Stabilizer Bar..... 783
Front Horizontal Stabilizer Bar Bushing 784
Front Horizontal Stabilizer Bar Connecting Rod 784
Front Wheel Hub Assembly..... 785
Special Tools 787

Rear Suspension 788

www.cargeek.ir

www.cargeek.ir

Contents

Specifications 788
Torque 788
Parameters 789
Description and Operation 790
System Layout 790
Description 793
Service Procedures 795
Rear Upper Swing Arm Assembly 795
Rear Lower Swing Arm Assembly 795
Rear Upper Swing Arm Bush 796
Rear Shock Absorber Assembly 796
Rear Suspension Spring Assembly 797
Rear Horizontal Stabilizer Bar 798
Rear Horizontal Stabilizer Bar Connecting Rod 799
Rear Horizontal Stabilizer Bar Bushing 799
Rear Lower Swing Arm Bush 800
Rear Wheel Hub 800
Rear Subframe Assembly 802
Rear Subframe Assembly - AWD 803
Rear Lateral Push Rod Assembly 804
Rear Lateral Push Rod Bushing 805
Trailing Arm Assembly 805
Rear Trailing Arm Bushing 806
Special Tools 807
Tyres and Wheels 808
Specifications 808
Torque 808
Service Procedures 809
Wheel 809

Brake System 811

Brake 811
Specifications 811
Torque 811
Parameters 812
Description and Operation 813
System Layout 813
Description 814
Service Procedures 818
Front Brake Pad 818
Front Brake Disc 819
Front Brake Caliper Housing Assembly 820
Rear Brake Pad 821
Rear Brake Disc 822
Rear Brake Caliper Housing Assembly 823
Thickness and Circular Runout Check - Rear Brake Disc 824
Thickness and Circular Runout Check - Front Brake Disc 825
Pedal Assembly-MT 826
Pedal Assembly - AT 827
Brake Pedal Position Sensor 828
Vacuum Booster Assembly 829
Brake Lamp Signal Sensor 830
Brake Lamp Switch Assembly 830
Brake System Bleeding 831
Brake Master Cylinder and Reservoir Assembly 832
Front Brake Hose 833
Rear Brake Hose 834
Left Front Brake Pipe 835
Right Front Brake Pipe 836
Brake Master Cylinder Pipe 837
Connecting Pipe from ABS to Rear Brake Hard Tube 837
Rear Brake Line 838
Special Tools 840
Park Brake 841
Specifications 841
Torque 841
Description and Operation 842
System Layout 842
System Control Diagram 843
Description 844
Service Procedures 846
EPB Module 846
Parking Brake Cable 847
Brake Module 848
Specifications 848
Torque 848
Description and Operation 849
System Layout 849
System Control Diagram 851
Description 852
Service Procedures 857
ABS Modulator 857
Front Wheel Speed Sensor 858
Rear Wheel Speed Sensor 859

www.cargeek.ir

www.cargeek.ir

Contents

Driveline/Axle 861

Drive Axle 861

Specifications 861
Torque 861
Description and Operation 862
System Layout 862
Description 866
Service Procedures 867
Right Front Axle Shaft Assembly 867
Right Rear Axle Shaft Assembly 868
Left Front Axle Shaft Assembly 869
Left Rear Axle Shaft Assembly 871
Rear Drive Shaft 872
Constant Velocity Joint Assembly 873
Constant Velocity Joint Assembly Sleeve 874
Tripod Joint Assembly 874
Tripod Joint Assembly Sleeve 875
Special Tools 876

Interior Fitting 877

Instrument Panel and Console 877

Specifications 877
Torque 877
Service Procedures 878
Driver Side Lower Trim Panel Assembly 878
Glove Box Assembly 878
Instrument Panel (I/P) Assembly 879
Instrument Panel Right Trim Panel Assembly 880
Instrument Panel Beam Assembly 880
Center Console Assembly 882
Instrument Panel Left Trim Panel Assembly 883
Insulation Pad of Engine Compartment Heat Shield 883
Front Insulation Pad 884
Center Console Combination Switch 885
Combination Switch of Upper Center Console 886

Seat 887

Specifications 887
Torque 887
Description and Operation 888
System Layout 888
System Control Diagram 890
Description 891
Operation 892
Service Procedures 894
Front Seat Assembly 894
Front Seat Back Foam 895
Front Seat Back Upholstery 895
Rear Seat (with central armrest) 896
Rear Seat Cushion 897
Rear Seat Cushion Upholstery 898
Rear Seat Cushion Foam 898
Rear Seat Back (with central armrest) 899
Rear Seat Back Upholstery 899
Rear Seat Back Foam 900
External Trim Panel - Front Seat 900
Front Seat Cushion Upholstery 901

Door Trim 902

Specifications 902
Torque 902
Service Procedures 903
Front Door Interior Trim Panel 903
Front Door Waterproof Membrane 904
Front Door Inner Handle 904
Rear Door Interior Trim Panel 905
Rear Door Waterproof Membrane 905
Rear Door Inner Handle 906

Interior Trim and Paneling 907

Specifications 907
Torque 907
Service Procedures 908
A Pillar Upper Trim Panel Assembly 908
A Pillar Lower Trim Panel Assembly 908
B Pillar Upper Trim Panel Assembly 909
B Pillar Lower Trim Panel Assembly 909
D Pillar Upper Trim Panel Assembly 910
Sunvisor Assembly 910
Roof Interior 911
Inner Roof Handle 911
Luggage Compartment Interior Trim Panel 912
Luggage Compartment Sill Trim Panel Assembly 912
Tail Gate Trim Panel 913
Luggage Cover Assembly 913
Carpet 914

Exterior Fitting 915

www.cargeek.ir

www.cargeek.ir

Contents

Fixed Windows **915**
Service Procedures 915
Rear Door Quarter Window 915
Windshield Assembly 915
Rear Window Assembly 916
Bumpers, Fascias and Grille **917**
Specifications 917
Torque 917
Service Procedures 918
Front Bumper 918
Rear Bumper 919
Front Bumper Beam 920
Rear Bumper Beam 920
Exterior Trim and Paneling **921**
Specifications 921
Torque 921
Service Procedures 922
Bottom Deflector 922
Front Wheelhouse Liner 922
Rear Wheelhouse Liner 923
A/C Air Intake Grille Assembly 923
Roof Rack Assembly 924
Roof Moulding 924
Spoiler Assembly 925
Rear Cover Lower Moulding 925
Tail Gate Moulding 926
Sill Moulding 926
Pedal Assembly 927
Mirrors **928**
Specifications 928
Torque 928
Description and Operation 929
System Layout 929
System Control Diagram 930
Description 931
Operation 933
Service Procedures 934
Exterior Rearview Mirror Assembly 934
Exterior Rearview Mirror Cover 934
Automatic Anti-dazzle Interior Rearview Mirror Assembly 935
Manual Anti-dazzle Interior Rearview Mirror Assembly 935
Roof **936**
Specifications 936
Torque 936
Description and Operation 937
System Layout 937
System Control Diagram 938
Description 939
Operation 940
Service Procedures 941
Sunroof Assembly 941
Sunroof Glass Panel 941
Sunroof Sunvisor 942
Sunroof Motor 942
Wipers and Washer **943**
Specifications 943
Torque 943
Description and Operation 944
System Layout 944
System Control Diagram 946
Description 947
Operation 949
Service Procedures 951
Windshield Wiper Arm Assembly 951
Windshield Wiper Linkage and Motor Assembly 951
Windshield Wiper Blade Assembly 952
Washer Reservoir Assembly 952
Washer Pump 953
Rear Window Wiper Arm Assembly 953
Rear Wiper Blade Assembly 954
Rear Window Wiper Motor 954

Lighting Systems 955

Lighting **955**
Specifications 955
Torque 955
Description and Operation 956
System Layout 956
System Control Diagram 957
Description 958
Operation 959
Service Procedures 961
Master Lighting Switch (MLS) 961
Front Reading Lamp Assembly 961
Rear Reading Lamp Assembly 962
Lamps **963**
Specifications 963
Torque 963
Description and Operation 964

www.cargeek.ir

www.cargeek.ir

Contents

System Layout 964
System Control Diagram..... 965
Description 967
Operation 970
Service Procedures..... 974
Tail Lamp Bulb 974
Rear License Plate Lamp Bulb..... 974
Rear Fog Lamp Bulb..... 975
Rear Combination Lamp Bulb 975
Rear Fog Lamp Assembly 976
Daytime Running Lamp Assembly 976
Low Beam Bulb 977
Front Fog Lamp Bulb 977
Front Fog Lamp Assembly..... 978
Headlamp Lighting Calibration (Low Beam and High Beam) 978
Headlamp Assembly..... 979
Front Direction Indicator Bulb 979
Rectifier 980
High Mounted Stop Lamp Assembly 980
Tail Lamp LED Bulb..... 981
LED Rear Combination Lamp Bulb 981
Rear Combination Lamp Assembly..... 982
Tail Lamp Assembly 982
High Beam Bulb..... 983
Headlamp Xenon Bulb 983
Dynamic Headlamp Leveling Control Module 984
Headlamp Leveling Front Suspension Height Sensor 984
Headlamp Leveling Rear Suspension Height Sensor 985
Left Headlamp Direction Drive Control Module 986
Right Headlamp Direction Drive Control Module 986

Body Systems 987

Door.....987
Specifications 987
Torque 987
Description and Operation..... 988
System Layout 988
System Control Diagram..... 989
Description 990
Operation 992
Service Procedures..... 993
Front Door Adjustment 993
Front Door Assembly..... 994
Drive Side Door Outer Handle..... 995
Driver Side Door Outer Handle (with Keyless Entry) 995
Front Passenger Door Outer Handle..... 996
Front Passenger Door Exterior Handle (with Keyless Entry)..... 997
Front Door Hinge Assembly 998
Front Door Lock Cylinder 999
Front Door Lock Assembly.....1000
Front Door Outer Handle Plate 1001
Rear Door Outer Handle 1002
Rear Door Adjustment 1003
Rear Door Assembly 1004
Rear Door Hinge Assembly.....1005
Rear Door Lock Assembly.....1005
Front Side Door Window Weatherstrip.....1006
Front Door Window Inner Weatherstrip.....1007
Front Door Window Outer Weatherstrip.....1007
Front Door Window Regulator.....1008
Front Door Window Glass 1009
Power Window Switch - Rear Door 1010
Power Window Switch - Driver 1010
Power Window Switch - Front Passenger 1011
Rear Door Window Outer Weatherstrip.....1011
Rear Door Window Inner Weatherstrip.....1012
Rear Door Window Weatherstrip 1012
Rear Door Window Regulator.....1013
Rear Door Window Glass 1013

Front Closures 1015
Specifications 1015
Torque 1015
Service Procedures.....1016
Bonnet Assembly.....1016
Bonnet Hinge Assembly 1017
Bonnet Inspection and Adjustment 1017
Bonnet Lock Body Assembly.....1018
Bonnet Release Cable.....1019
Bonnet Open Handle Assembly.....1020
Fender Assembly 1020

www.cargeek.ir

www.cargeek.ir

Contents

Upper Radiator Beam 1021
Battery Tray 1023
Rear Closures 1024
Specifications 1024
Torque 1024
Service Procedures 1025
Fuel Filler Door Assembly 1025
Fuel Filler Door Release Cable Assembly 1025
Fuel Filler Door Open Handle 1026
Tail Gate Assembly 1027
Tail Gate Lock Assembly 1028
Tail Gate Striker 1029
Tail Gate Hinge Assembly 1029
Tail Gate Air Spring and Mounting Ball Head 1030
Horn 1031
Specifications 1031
Torque 1031
Service Procedures 1032
Horn 1032
Body Control Module 1033
Specifications 1033
Torque 1033
Description and Operation 1034
System Layout 1034
System Control Diagram 1035
Description 1036
Operation 1041
Service Procedures 1043
Body Control Module (BCM) 1043
PMDC 1044
Specifications 1044
Torque 1044
Description and Operation 1045
System Layout 1045
System Control Diagram 1046
Description 1047
Operation 1048
Service Procedures 1049
DC Converter with Electrical Power Management 1049

Body Repair 1051

Body Dimension 1051
Point to Point Dimensional Information 1051
Side and Top 1051
Bottom 1053
Rear End 1055
Internal 1056
Front End 1057
Gap Information 1058
Information of Bodyside and Fuel Fill Door 1058
Front End Information 1059
Rear End Information 1061
Sunroof Information 1063
Paint and Coatings 1064
Overview 1064
Collision Repair 1067
Description and Operation 1067
General Welding Protection Measures 1067
Corrosion Protection 1072
Body Seal 1075
Diagnostic 1076
Leak Test 1076
Service Procedures 1077
Roof Panel 1077
Engine Compartment Panel 1078
Dash Panel 1079
Bodyside Panel 1080
Front Floor 1081
Rear Floor 1082
Door Panel Assembly 1083
Bonnet Panel Assembly 1084
Tail Gate Panel Assembly 1085

Safety and Restraints 1087

Vehicle Access 1087
Specifications 1087
Torque 1087
Description and Operation 1088
System Layout 1088
System Control Diagram 1089
Description 1091
Service Procedures 1099
Add and Disable a Key 1099
Passive Entry and Passive Start (PEPS) Control Module 1100
Passive Entry and Passive Start (PEPS) Antenna - Front 1100

www.cargeek.ir

www.cargeek.ir

Contents

Passive Entry and Passive Start (PEPS) Antenna - Middle 1101
Passive Entry and Passive Start (PEPS) Antenna - Rear 1101
Passive Entry and Passive Start (PEPS) Antenna - Rear Bumper Upholstery 1102
Antenna for Keyless Entry and Start (PEPS) - Door Handle 1102
One-touch Ignition Switch 1103
Mechanical Ignition Switch 1103
Alarm System 1104
Description and Operation 1104
System Layout 1104
System Control Diagram 1105
Description 1106
Operation 1107
Service Procedures 1108
Low Frequency Anti-theft Receiving Coil 1108
Backup Coil 1108
Gateway 1109
Specifications 1109
Torque 1109
Description and Operation 1110
System Layout 1110
Description 1111
Service Procedures 1114
Gateway Module 1114
Seat Belts 1115
Specifications 1115
Torque 1115
Description and Operation 1116
System Layout 1116
System Control Diagram 1117
Description 1118
Operation 1120
Service Procedures 1121
Front Seat Belt Height Regulator 1121
Front Seat Belt Assembly 1122
Front Seat Belt Buckle 1123
Rear Seat Belt Assembly 1123
Rear Middle Seat Belt 1124
Rear Seat Middle Belt 1125
Rear Seat Belt Buckle 1126
Supplementary Restraint Systems 1127
Specifications 1127
Torque 1127
Description and Operation 1128
System Layout 1128
System Control Diagram 1129
Description 1130
Operation 1134
Service Procedures 1136
Airbag Control Module 1136
Collision Sensor 1136
Steering Wheel Airbag 1137
Instrument Panel Airbag 1138
Head Impact Protection Airbag Module 1139
Park Assistant System 1141
Specifications 1141
Torque 1141
Description and Operation 1142
System Layout 1142
System Control Diagram 1143
Description 1144
Operation 1146
Service Procedures 1148
Parking Assist Control Module 1148
Ultrasonic Sensor 1148
Rear View Camera 1149
Information and Entertainment 1151
Entertainment and Navigation 1151
Specifications 1151
Torque 1151
Description and Operation 1152
System Layout 1152
System Control Diagram 1153
Description 1154
Operation 1164
Service Procedures 1165
Entertainment Mainframe 1165
A Pillar Tweeter 1166
Front Door Full Range Speaker 1166
Rear Door Tweeter 1167
Rear Door Woofer 1167
Roof Antenna Connecting Cable 1168
Communication Module 1168
Communication Module Battery 1170
Microphone 1170

www.cargeek.ir

www.cargeek.ir

Contents

Communication Antenna 1171

Displays and Gages 1172

Specifications 1172

Torque 1172

Description and Operation 1173

System Layout 1173

System Control Diagram 1175

Description 1176

Operation 1189

Service Procedures 1190

Instrument Pack 1190

Fuse Box and Harness 1191

Specifications 1191

Torque 1191

Service Procedures 1192

Engine Compartment Fuse Box 1192

Battery Fuse Box 1193

Body Harness 1193

Instrument Panel Harness 1201

Driver Door Harness 1203

Front Passenger Door Harness 1204

Rear Door Harness 1205

Center Console Harness 1206

Driver Power Seat Harness 1207

Front Power Socket 1208

Self-learning/Programming 1209

Glass Regulator/Sunroof Initialization 1209

Operation after Battery Disconnection 1210

ECM 1211

TCM 1212

Transmission Control Module (TCM) - 7-speed Automatic 1216

SCU 1218

TCCM 1219

Air Conditioning System (HVAC) 1220

EPS Module 1221

EPB Module 1222

Stability Control System (SCS) 1223

Steering Angle Sensor (**SAS**) 1224

BCM 1225

Communication Module (TBOX) 1226

Gateway (GW) 1227

DHL 1228

PEPS 1229

Instrument Pack (IPK) 1230

SDM 1231

Entertainment System Control Module (FICM) 1232

PMDC 1233

PDC Module 1234

Glossary List 1235

www.cargeek.ir

www.cargeek.ir

www.cargeek.ir

www.cargeek.ir

www.cargeek.ir

www.cargeek.ir

General Information

General Precautions

Dangerous Substances

Modern vehicles contain many materials and liquids which if not handled with care can be hazardous to both personal health and the environment.

Warning: Many liquids and other substances used in vehicles are poisonous and should under no circumstances be consumed and should, as far as possible, be kept from contact with the skin. These liquids and substances include acid, antifreeze, brake fluid, fuel, windscreen washer additives, lubricants, refrigerants and various adhesives.

Warning: Always read carefully the instructions printed on labels or stamped on components and obey them implicitly. Such instructions are included for reasons of your health and personal safety. Never disregard them.

Synthetic Rubber

Many O-rings, seals, hoses, flexible pipes and other similar items which appear to be natural rubber, are in fact, made of synthetic materials called Fluoroelastomers. Under normal operating conditions this material is safe and does not present a health hazard. However, if the material is damaged by fire or excessive heating, it can break down and produce highly corrosive Hydrofluoric acid.

Contact with Hydrofluoric acid can cause serious burns on contact with skin. If skin contact does occur :

- Remove any contaminated clothing immediately.
- Irrigate affected area of skin with a copious amount of cold water or limewater for 15 to 60 minutes.
- Obtain medical assistance immediately.

Should any material be in a burnt or overheated condition, handle with extreme caution and wear protective clothing (seamless industrial gloves, protective apron etc.).

Decontaminate and dispose of gloves immediately after use.

Lubricating Oils

Avoid excessive skin contact with used lubricating oils and always adhere to the health protection precautions.

Warning: Avoid excessive skin contact with used engine oil. Used engine oil contains potentially harmful contaminants which may cause skin cancer or other serious skin disorders.

Warning: Avoid excessive skin contact with mineral oil. Mineral oils remove the natural fats from the skin, leading to dryness, irritation and dermatitis.

Health Protection Precautions

The following precautions should be observed at all times.

- Wear protective clothing, including impervious gloves where practicable.
- Avoid prolonged and repeated contact with oils, particularly used engine oils.
- Do not put oily rags in pockets.
- Avoid contaminating clothes (particularly those next to the skin) with oil.
- Overalls must be cleaned regularly. Discard heavily soiled clothing and oil impregnated footwear.
- First aid treatment should be obtained immediately for open cuts and wounds.
- Apply barrier creams before each work period to help prevent lubricating oil from contaminating the skin.
- Wash with soap and water to ensure all oil is removed (proprietary skin cleansers and nail brushes will help).
- Use moisturisers after cleaning; preparations containing lanolin help replace the skin's natural oils which have been removed.
- Do not use petrol/gasoline, kerosene, diesel fuel, oil, thinners or solvents for cleaning skin.
- Where practicable, degrease components prior to handling.
- If skin disorders develop, obtain medical advice without delay.
- Wear eye protection (e.g. goggles or face shield) if there is a risk of eye contamination. Eye wash facilities should be provided in close vicinity to the work area.

www.cargeek.ir

www.cargeek.ir

Safety Instructions

Jacking

Caution: It is best to use the lift when working under the vehicle. Be sure to hold the wheels with chocks and apply parking brake.

Always use the recommended jacking points.

Always ensure that any lifting apparatus has sufficient load capacity for the weight to be lifted.

Ensure the vehicle is standing on level ground prior to lifting or jacking.

Apply the parking brake and chock the wheels.

Warning: Do not work on or under a vehicle supported only by a jack. Always support the vehicle on safety stands.

Do not leave tools, lifting equipment, spilt oil, etc. around or on the work bench area. Always keep a clean and tidy work area.

Brake Shoes and Pads

Always fit the correct grade and specification of brake linings. When renewing brake pads and brake shoes, always replace as complete axle sets.

Brake Hydraulics

Observe the following recommendations when working on the brake system:

- Ensure that hoses run in a natural curve and are not kinked or twisted.
- Ensure that hoses run in a natural curve and are not kinked or twisted.
- Fit brake pipes securely in their retaining clips and ensure that the pipe cannot contact a potential chafing point.
- Containers used for brake fluid must be kept absolutely clean.
- Do not store brake fluid in an unsealed container, it will absorb water and in this condition would be dangerous to use due to a lowering of its boiling point.
- Do not allow brake fluid to be contaminated with mineral oil, or put new brake fluid in a container which has previously contained mineral oil.
- Do not re-use brake fluid removed from the system.
- Always use clean brake fluid or a recommended alternative to clean hydraulic components.
- After disconnection of brake pipes and hoses, immediately fit suitable blanking caps or plugs to prevent the ingress of dirt.
- Only use the correct brake fittings with compatible threads.
- Observe absolute cleanliness when working with hydraulic components.

Cooling System Caps and Plugs

expansion tank caps and coolant drain or bleed screws when the engine is hot, especially if it is overheated. To avoid the possibility of scalding, allow the engine to cool before attempting removal.

www.cargeek.ir

www.cargeek.ir

www.cargeek.ir

Environmental Precautions

General

This section provides general information which can help to reduce the environmental impacts from the activities carried out in workshops.

Emissions to Air

Many of the activities that are carried out in workshops emit gases and fumes which contribute to global warming, depletion of the ozone layer and/or the formation of photochemical smog at ground level. By considering how the workshop activities are carried out, these gases and fumes can be minimised, thus reducing the impact on the environment.

Exhaust Fumes

Running car engines is an essential part of workshop activities and exhaust fumes need to be ventilated to atmosphere. However, the amount of time engines are running and the position of the vehicle should be carefully considered at all times, to reduce the release of poisonous gases and minimise the inconvenience to people living nearby.

Solvents

Some of the cleaning agents used are solvent based and will evaporate to atmosphere if used carelessly, or if cans are left unsealed. All solvent containers should be firmly closed when not needed and solvent should be used sparingly. Suitable alternative materials may be available to replace some of the commonly used solvents. Similarly, many paints are solvent based and the spray should be minimised to reduce solvent emissions.

Refrigerant

Discharge and replacement of these materials from air conditioning units should only be carried out using the correct equipment.

Engines:

Always adhere to the following.

- Don't leave engines running unnecessarily;
- Minimise testing times and check where the exhaust fumes are being blown.

Materials:

- Keep lids on containers of solvents;
- Only use the minimum quantity;
- Consider alternative materials;
- Minimise over-spray when painting.

Gases:

- Use the correct equipment for collecting refrigerants;
- Don't burn rubbish on site.

Discharges to Water

Oil, petrol, solvent, acids, hydraulic oil, antifreeze and other such substances should never be poured down the drain and every precaution must be taken to prevent spillage reaching the drains.

Handling of such materials must take place well away from the drains and preferably in an area with a kerb or wall around it, to prevent discharge into the drain. If a spillage occurs it should be soaked up immediately. Having a spill kit available will make this easier.

Checklist

Always adhere to the following disposal and spillage prevention instructions.

- Never pour anything down a drain without first checking that it is environmentally safe to do so, and that it does not contravene any local regulations.
- Store liquids in a walled area;
- Protect bulk storage tanks from vandalism by locking the valves;
- Transfer liquids from one container to another in an area away from open drains;
- Ensure lids are replaced securely on containers;
- Make sure that taps on liquid containers are secure and cannot be accidentally turned on;
- Have spill kits available near to points of storage and handling of liquids.

Spill Kits

Special materials are available to absorb a number of different substances. They can be in granular form, ready to use and bought in convenient containers for storage. Disposal of used spill-absorbing material is dealt with in 'Waste Management' section.

Land Contamination

Oils, fuels and solvents etc. can contaminate any soil that they are allowed to contact. Such materials should never be disposed of by pouring onto soil and every precaution must be taken to prevent spillage reaching soil. Waste materials stored on open ground could also leak, or have polluting substances washed off them that would contaminate the land. Always store these materials in suitable robust containers.

Checklist

Always adhere to the following.

- Don't pour or spill anything onto the soil or bare ground;
- Don't store waste materials on bare ground, see 'Spillage prevention' list.

www.cargeek.ir

www.cargeek.ir

Local Issues

A number of environmental issues will be of particular concern to residents and other neighbours close to the site. The sensitivity of these issues will depend on the proximity of the site and the layout and amount of activity carried on at the site.

Car alarm testing, panel beating, hammering and other such noisy activities should, whenever possible, be carried out indoors with doors and windows shut or as far away from houses as possible.

Be sensitive to the time of day when these activities are carried out and minimise the time of the noisy operation, particularly in the early morning and late evening.

Another local concern will be the smell from the various materials used. Using less solvent, paint and petrol could help prevent this annoyance.

Local residents and other business users will also be concerned about traffic congestion, noise and exhaust fumes, be sensitive to these concerns and try to minimise inconvenience from deliveries, customers and servicing operations.

Checklist

Always adhere to the following.

- Identify where the neighbours who are likely to be affected are situated;
- Minimise noise, smells and traffic nuisance;
- Prevent litter by disposing of waste in the correct manner;
- Have waste containers emptied regularly.

Waste Management

One of the major ways that pollution can be reduced is by the careful handling, storage and disposal of all waste materials that occur on sites. This means that it is necessary to not only know what the waste materials are, but also to have the necessary documentation and to know local regulations that apply.

Handling and Storage of Waste

They should be stored in such a way as to prevent the escape of the material to land, water or air.

They must also be segregated into different types of waste e.g. oil, metals, batteries, used vehicle components. This will prevent any reaction between different materials and assist in disposal.

Disposal of Waste

Disposal of waste materials must only be to waste carriers who are authorised to carry those particular waste materials and have all the necessary documentation. The waste carrier is responsible for ensuring that the waste is taken to the correct disposal sites.

Dispose of waste in accordance with the following guidelines.

- Fuel, hydraulic fluid, anti-freeze and oil: keep separate and dispose of to specialist contractor.
- Refrigerant: collect in specialist equipment and reuse.
- Detergents: safe to pour down the foul drain if diluted.
- Paint, thinners: keep separate and dispose of to specialist contractor.
- Components: send back to supplier for refurbishment, or disassemble and reuse any suitable parts. Dispose of the remainder in ordinary waste.
- Small parts: reuse any suitable parts, dispose of the remainder in ordinary waste.
- Metals: can be sold if kept separate from general waste.
- Tyres: keep separate and dispose of to specialist contractor.
- Packaging: compact as much as possible and dispose of in ordinary waste.
- asbestos material : keep separate and dispose of to specialist contractor.
- Oily and fuel wastes (e.g. rags, used spill kit material): keep separate and dispose of to specialist contractor.
- Air filters: keep separate and dispose of to specialist contractor.
- Rubber/plastics: dispose of in ordinary waste.
- Hoses: dispose of in ordinary waste.
- Batteries: keep separate and dispose of to specialist contractor.
- Airbags - explosives: keep separate and dispose of to specialist contractor.
- Electrical components: send back to supplier for refurbishment, or disassemble and reuse any suitable parts. Dispose of the remainder in ordinary waste.
- Catalysts: can be sold if kept separate from general waste
- Used spill-absorbing material: keep separate and dispose of to specialist contractor.

www.cargeek.ir

www.cargeek.ir

General Fitting Instructions

Component Removal

Whenever possible, clean components and surrounding area before removal.

- Blank off openings exposed by component removal.
- Immediately seal fuel, oil or hydraulic lines when apertures are exposed; use plastic caps or plugs to prevent loss of fluid and ingress of dirt.
- Close the open ends of oilways exposed by component removal with tapered hardwood plugs or conspicuous plastic plugs.
- Immediately a component is removed, place it in a suitable container; use a separate container for each component and its associated parts.
- Clean bench and provide marking materials, labels and containers before dismantling a component.

Dismantling

Observe scrupulous cleanliness when dismantling components, particularly when brake, fuel or hydraulic system parts are being worked on. A particle of dirt or a cloth fragment could cause a serious malfunction if trapped in these systems.

- Blow out all tapped holes, crevices, oilways and fluid passages with an air line. Ensure that any O-rings used for sealing are correctly replaced or renewed, if disturbed during the process.
- Use marking ink to identify mating parts and ensure correct reassembly. Do not use a centre punch or scriber to mark parts, they could initiate cracks or distortion in marked components.
- Wire together mating parts where necessary to prevent accidental interchange (e.g. roller bearing components).
- Attach labels to all parts which are to be renewed, and to parts requiring further inspection before being passed for reassembly; place these parts in separate containers from those containing parts for rebuild.
- Do not discard a part due for renewal until after comparing it with a new part, to ensure that its correct replacement has been obtained.

Cleaning Components

Always use the recommended cleaning agent or equivalent. Ensure that adequate ventilation is provided when volatile degreasing agents are being used. Do not use degreasing equipment for components containing items which could be damaged by the use of this process.

General Inspection

All components should be inspected for wear or damage before being reassembled.

- Never inspect a component for wear or dimensional check unless it is absolutely clean; a slight smear of grease can conceal an incipient failure.
- When a component is to be checked dimensionally against recommended values, use the appropriate measuring equipment (surface plates, micrometers, dial gauges etc.). Ensure the measuring equipment is calibrated and in good serviceable condition.
- Reject a component if its dimensions are outside the specified tolerances, or if it appears to be damaged.
- A part may be refitted if its critical dimension is exactly to its tolerance limit and it appears to be in satisfactory condition. Use 'Plastigauge' for checking bearing surface clearances.

www.cargeek.ir

www.cargeek.ir

www.cargeek.ir

Ball and Roller Bearings

General

When removing and installing bearings, ensure that the following practices are observed to ensure component serviceability.

- Remove all traces of lubricant from bearing under inspection by cleaning with a suitable degreasant; maintain absolute cleanliness throughout operations.
- Hold inner race of bearing between finger and thumb of one hand and spin outer race to check that it revolves absolutely smoothly. Repeat, holding outer race and spinning inner race.
- Rotate outer ring gently with a reciprocating motion, while holding inner ring; feel for any check or obstruction to rotation. Reject bearing if action is not perfectly smooth.
- Lubricate bearing with generous amounts of lubricant appropriate to installation.
- Inspect shaft and bearing housing for discoloration or other markings which indicate movement between bearing and housing.
- Ensure that shaft and housing are clean and free from burrs before fitting bearing.
- If one bearing of a pair shows an imperfection, it is advisable to replace both with new bearings; an exception could be if the faulty bearing had covered a low mileage, and it can be established that damage is confined to only one bearing.
- Never refit a ball or roller bearing without first ensuring that it is in a fully serviceable condition.
- When hub bearings are removed or displaced, new bearings must be fitted; do not attempt to refit the old hub bearings.
- When fitting a bearing to a shaft, only apply force to the inner ring of the bearing. When fitting a bearing into a housing, only apply force to the outer ring of the bearing.
- In the case of grease lubricated bearings (eg. hub bearings) fill the space between bearing and outer seal with the recommended grade of grease before fitting seal.
- Always mark components of separable bearings (eg. taper roller bearings) when dismantling, to ensure correct reassembly. Never fit new rollers in a used outer ring; always fit a complete new bearing assembly.

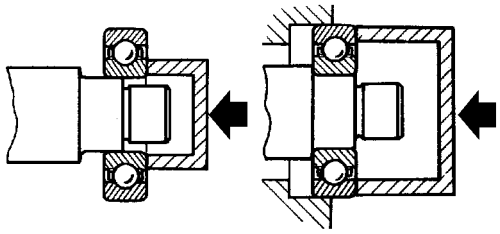

S003040

www.cargeek.ir

www.cargeek.ir

Oil Seals

General

Always renew oil seals which have been removed from their working location (whether as an individual component or as part of an assembly). NEVER use a seal which has been improperly stored or handled, such as hung on a hook or nail.

- Carefully examine seal before fitting to ensure that it is clean and undamaged.
- Ensure the surface on which the new seal is to run is free of burrs or scratches. Renew the component if the original sealing surface cannot be completely restored.
- Protect the seal from any surface which it has to pass when being fitted. Use a protective sleeve or tape to cover the relevant surface.
- Lubricate the sealing lips with a recommended lubricant before use to prevent damage during initial use. On dual lipped seals, smear the area between the lips with grease.
- If a seal spring is provided, ensure that it is fitted correctly. Place lip of seal towards fluid to be sealed and slide into position on shaft. Use fitting sleeve where possible to protect sealing lip from damage by sharp corners, threads or splines. If a fitting sleeve is not available, use plastic tube or tape to prevent damage to the sealing lip.

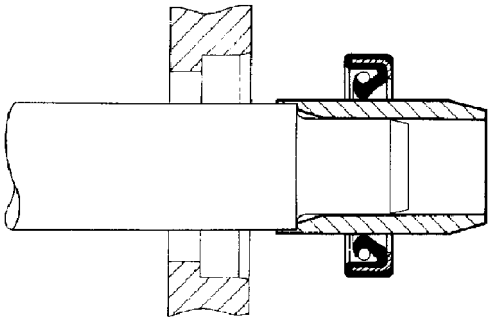

S003041

- Grease outside diameter of seal, place square to housing recess and press into position using great care, and if possible a 'bell piece' to ensure that seal is not tilted. In some cases it may be preferable to fit seal to housing before fitting to shaft. Never let weight of unsupported shaft rest in seal.

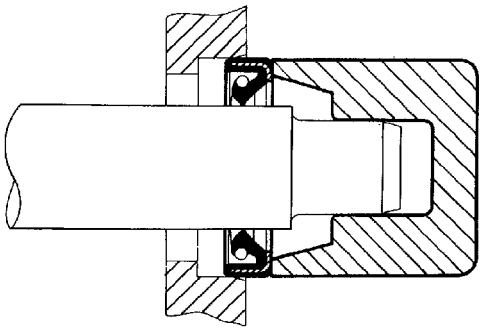

S003042

- Use the recommended service tool to fit an oil seal. If the correct service tool is not available, use a suitable tube approximately 0.4 mm (0.015 in.) smaller than the outside diameter of the seal. Use a hammer VERY GENTLY on drift if a suitable press is not available.
- Use the recommended service tool to fit an oil seal. If the correct service tool is not available, use a suitable tube approximately 0.4 mm (0.015 in.) smaller than the outside diameter of the seal. Use a hammer VERY GENTLY on drift if a suitable press is not available.

www.cargeek.ir

www.cargeek.ir

www.cargeek.ir

Joints and Joint Faces

General

Fit joints dry unless specified otherwise.

- Always use the correct gaskets as specified.
- When sealing compound is used, apply in a thin uniform film to metal surfaces; take care to prevent sealing compound from entering oilways, pipes or blind tapped holes.
- If gaskets and/or sealing compound is recommended for use; remove all traces of old sealing compound prior to reassembly. Do not use a tool which will damage the joint faces and smooth out any scratches or burrs using an oil stone.
- Prior to reassembly, blow through any pipes, channels or crevices with compressed air.

Locking Devices

General

Always replace locking devices with one of the same design.

Tab Washers

Always release locking tabs and fit new locking washers. Do not re-use locking tabs.

Locking Nuts

Always use a backing spanner when loosening or tightening locking nuts, brake and fuel pipe unions.

Roll Pins

Always fit new roll pins of an interference fit in the hole.

Circlips

Always fit new circlips of the correct size for the groove.

Keys and Keyways

Remove burrs from edges of keyways with a fine file and clean thoroughly before attempting to refit key.

Clean and inspect key closely; keys are suitable for refitting only if indistinguishable from new, as any indentation may indicate the onset of wear.

Split Pins

Always fit new split-pins of the correct size for the hole in the bolt or stud.

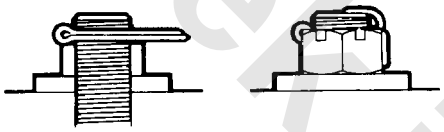

S003043

www.cargeek.ir

www.cargeek.ir

www.cargeek.ir

Screw Threads

General

Metric threads to ISO standards are used.

Damaged nuts, bolts and screws must always be discarded. Cleaning damaged threads with a die or tap impairs the strength and fit of the threads and is not recommended.

Always ensure that replacement bolts are at least equal in strength to those replaced.

Castellated nuts must not be loosened to accept a split-pin, except in recommended cases when this forms part of an adjustment.

Do not allow oil or grease to enter blind threaded holes. The hydraulic action on screwing in the bolt or stud could split the housing.

Always tighten a nut or bolt to the recommended torque figure. Damaged or corroded threads can affect the torque reading.

To check or re-tighten a bolt or screw to a specified torque figure, first loosen a quarter of a turn, then re-tighten to the correct torque figure.

Oil thread lightly before tightening to ensure a free running thread, except in the case of threads treated with sealant/lubricant, and selflocking nuts.

Fasteners Identification

Bolt Identification

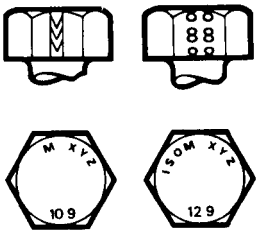

S003044

An ISO metric bolt or screw made of steel and larger than 6 mm in diameter can be identified by either of the symbols ISO M or M embossed or indented on top of the bolt head.

In addition to marks identifying the manufacturer, the top of the bolt head is also marked with symbols indicating the strength grade, e.g. 8.8; 10.9; 12.9; 14.9. As an alternative, some bolts and screws have the M and strength grade symbol stamped on the flats of the hexagon.

Encapsulated Bolts and Screws

S003045

Encapsulated bolts and screws have a microencapsulated locking agent pre-applied to the thread. They are identified by a coloured section which extends 360° around the thread. The locking agent is released and activated by the assembly process and is then chemically cured to provide the locking action.

Unless a specific repair procedure states otherwise, encapsulated bolts may be reused providing the threads are undamaged and the following procedure is adopted:

- Remove loose adhesive from the bolt and housing threads.
- Ensure threads are clean and free of oil and grease.
- Apply an approved locking agent.

www.cargeek.ir

www.cargeek.ir

An encapsulated bolt may be replaced with a bolt of equivalent specification provided it is treated with an approved locking agent.

Self-locking Bolts and Screws

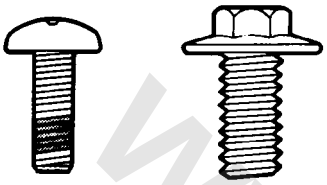

S003046

Self-locking bolts and screws, i.e. nylon patched or trilobular thread can be reused providing resistance can be felt when the locking portion enters the female thread.

Nylon patched bolts and screws have a locking agent pre-applied to the threads. They are identified by the presence of a coloured section of thread which extends for up to 180° around the thread.

Trilobular bolts (i.e. Powerlok) have a special thread form which creates a slight interference with the thread of the hole or nut into which it is screwed.

DO NOT reuse self-locking fasteners in critical locations (e.g. engine bearings, flywheel). Always use the correct replacement self-locking nut, bolt or screw.

DO NOT fit non self-locking fasteners in applications where a self-locking nut, bolt or screw is specified.

Nut Identification A

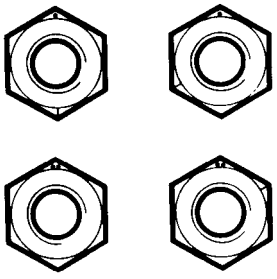

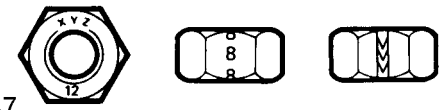

S003047

A nut with an ISO metric thread is marked on one face or on one of the flats of the hexagon with the strength grade symbol 8, 12, or 14. Some nuts with a strength grade 4, 5 or 6 are also marked and some have the metric symbol M on the flat opposite the strength grade marking.

When tightening a slotted or castellated nut, never loosen it to insert a split pin except where recommended as part of an adjustment. If difficulty is experienced, alternative washers or nuts should be selected, or the washer thickness reduced.

Where bearing preload is involved, nuts should be tightened in accordance with special instructions.

Self-locking Nuts

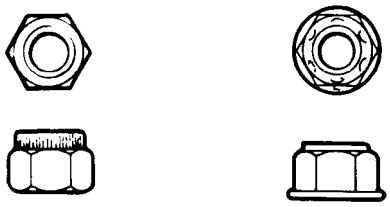

S003048

Self-locking nuts, e.g. nylon insert or deferred thread nuts, can be reused providing resistance can be felt when the locking portion of the nut passes over the thread of the bolt or stud.

Where self-locking nuts have been removed, it is advisable to replace them with new ones of the same type.

Don't use non self-lock nuts in the area where self-lock nuts must be used.

www.cargeek.ir

www.cargeek.ir

Flexible Pipes and Hoses

General

When removing and installing flexible hydraulic pipes and hoses, ensure that the following practices are observed to ensure component serviceability.

- Clean end fittings and the area surrounding them as thoroughly as possible.
- Obtain appropriate plugs or caps before detaching hose end fittings, so that the ports can be immediately covered to prevent the ingress of dirt.

  Clean hose externally and blow through with airline. Examine carefully for cracks, separation of plies, security of end fittings and external damage. Reject any faulty hoses.
- When refitting a hose, ensure that no unnecessary bends are introduced, and that hose is not twisted before or during tightening of union nuts.
- Fit a cap to seal a hydraulic union and a plug to its socket after removal to prevent ingress of dirt.
- Absolute cleanliness must be observed with hydraulic components at all times.

  After any work on hydraulic systems, carefully inspect for leaks underneath the vehicle while a second operator applies maximum brake pressure to the brakes (engine running) and operates the steering.

Fuel System Hoses

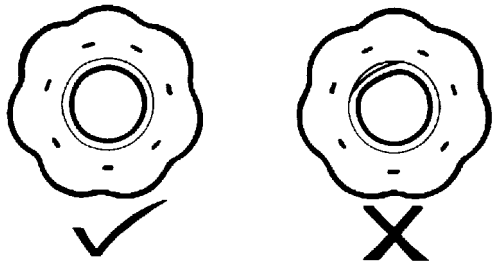

S003049

All fuel hoses are made up of two laminations, an armoured rubber outer sleeve and an inner viton core. If any of the fuel system hoses have been disconnected, it is imperative that the internal bore is inspected to ensure that the viton lining has not become separated from the armoured outer sleeve. A new hose must be fitted if separation is evident.

Cooling System Hoses

The following precautions MUST be followed to ensure that integrity of cooling hoses and their connections to system components are maintained.

Hose Orientation and Connection

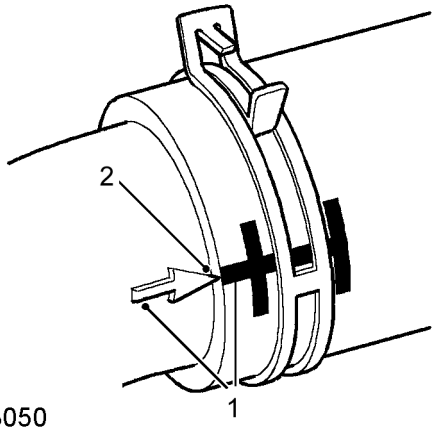

S003050

Correct orientation of cooling hoses is important in ensuring that the hose does not become fatigued or damaged through contact with adjacent components. Where 'timing' marks (1) are provided on the hose and corresponding connection, these must be used to ensure correct orientation. Hoses must be pushed fully onto their connection points. Usually, a moulded form (2) on the stub pipe provides a positive indicator.

Hose Clip

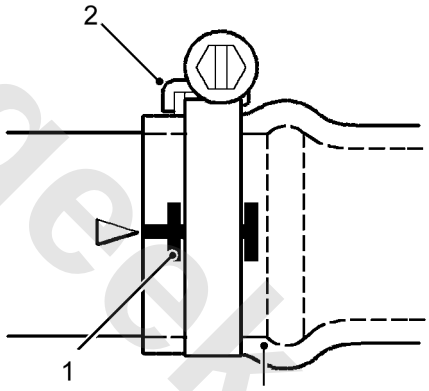

S003051

Markings (1) are usually provided on the hose to indicate the correct clip position. If no markings are provided, position the clip directly behind the retaining lip at the end of the stub as shown. Worm drive clips should be oriented with the crimped side of the drive housing (2) facing towards the end of the hose, or the hose may become pinched between the clip and the stub pipe retaining lip. Worm drive clips should be tightened to 3 Nm unless otherwise stated. Ensure that hose clips do not foul adjacent components.

Heat Protection

Always ensure that heatshields and protective sheathing are in good condition. Replace if damage is evident. Particular care must be taken when routing hoses close to hot engine components, such as the exhaust manifold and the Exhaust Gas Recirculation (EGR) pipe. Hoses will relax and deflect slightly

www.cargeek.ir

www.cargeek.ir

when hot; ensure this movement is taken into account when routing and securing hoses.

Fuel Handling Precautions

General

Fuel vapour is highly flammable and in confined spaces is also explosive and toxic. The vapour is heavier than air and will always fall to the lowest level. The vapour can be easily distributed throughout a workshop by air currents; consequently, even a small spillage of fuel is potentially very dangerous.

The following information provides basic precautions which must be observed if fuel is to be handled safely. It also outlines other areas of risk which must not be ignored. This information is issued for basic guidance only, if in doubt consult your local Fire Officer.

Always have a fire extinguisher containing FOAM, CO2, GAS or POWDER close at hand when handling or draining fuel or when dismantling fuel systems. Fire extinguishers should also be located in areas where fuel containers are stored.

Always disconnect the vehicle battery before carrying out dismantling or draining work on a fuel system.

Whenever fuel is being handled, drained or stored, or when fuel systems are being dismantled, all forms of ignition must be extinguished or removed; any lead lamps must be flameproof and kept clear of spillage.

Warning: No one should be permitted to repair components associated with fuel without first having specialist training.

Warning: Do not remove fuel system components while the vehicle is over a pit.

Fuel Tank Draining

Fuel tank draining should be carried out in accordance with the procedure outlined in the FUEL DELIVERY section of this manual and observing the following precautions

Warning: Do not remove fuel system components while the vehicle is over a pit. Extraction or draining of fuel must be carried out in a well ventilated area.

The capacity of containers must be more than adequate for the amount of fuel to be extracted or drained. The container should be clearly marked with its contents and placed in a safe storage area which meets the requirements of local authority regulations.

Fuel Tank Removal

When the fuel line is secured to the fuel tank outlet by a spring steel clip, the clip must be released before the fuel line is disconnected or the fuel tank is removed. This procedure will avoid the possibility of fumes in the fuel tank being ignited when the clip is released.

www.cargeek.ir

www.cargeek.ir

As an added precaution, fuel tanks should have a 'FUEL VAPOUR' warning label attached to them as soon as they are removed from the vehicle.

Fuel Tank Repairs

No attempt should be made to repair a plastic fuel tank. If the structure of the tank is damaged, a new tank must be fitted.

Body Repairs

Plastic fuel pipes are particularly susceptible to heat, even at relatively low temperature, and can be melted by heat conducted from some distance away.

When body repairs involve the use of heat, all fuel pipes which run in the vicinity of the repair area must be removed, and the tank outlet plugged.

Warning: If welding is to be carried out in the vicinity of the fuel tank, the fuel system must be drained and the tank removed before welding commences.

Electrical Precautions

General

The following guidelines are intended to ensure the safety of the operator while preventing damage to the electrical and electronic components fitted to the vehicle. Where necessary, specific precautions are detailed in the individual procedures of this manual.

Equipment

Prior to commencing any test procedure on the vehicle ensure that the relevant test equipment is working correctly and any harness or connectors are in good condition. It is particularly important to check the condition of the lead and plugs of mains operated equipment.

Polarity

Never reverse connect the vehicle battery and always ensure the correct polarity when connecting test equipment.

High Voltage Circuits

Whenever disconnecting live HT circuits always use insulated pliers and never allow the open end of the HT lead to contact other components, particularly ECUs. Exercise caution when measuring the voltage on the coil terminals while the engine is running, high voltage spikes can occur on these terminals.

Connectors and Harnesses

The engine compartment of a vehicle is a particularly hostile environment for electrical components and connectors:

- Always ensure electrically related items are dry and oil free before disconnecting and connecting test equipment.
- Ensure disconnected multiplugs and sensors are protected from being contaminated with oil, coolant or other solutions. Contamination could impair performance or result in catastrophic failure.
- Never force connectors apart using tools to prise apart or by pulling on the wiring harness.
- Always ensure locking tabs are disengaged before disconnection, and match orientation to enable correct reconnection.
- Ensure that any protection (covers, insulation etc.) is replaced if disturbed.

Having confirmed a component to be faulty:

- Switch off the ignition and disconnect the battery.
- Remove the component and support the disconnected harness.
- When replacing the component keep oily hands away from electrical connection areas and push connectors home until any locking tabs fully engage.

www.cargeek.ir

www.cargeek.ir

Battery Disconnection

Before disconnecting the battery, disable the alarm system and switch off all electrical equipment.

Caution: To prevent damage to electrical components, always disconnect the battery when working on the vehicle's electrical system. The ground lead must be disconnected first and reconnected last.

Caution: Always ensure that battery leads are routed correctly and are not close to any potential chafing points.

Battery Charging

Always ensure any battery charging area is well ventilated and that every precaution is taken to avoid naked flames and sparks.

Disciplines

Remove the handset prior to making any connection or disconnection in the system to prevent electrical surges caused by disconnecting 'live' connections damaging electronic components.

Ensure hands and work surfaces are clean and free of grease, swarf, etc. Grease collects dirt which can cause electrical tracking (shortcircuits) or high resistance contacts.

When handling printed circuit boards, treat with care and hold by the edges only; note that some electronic components are susceptible to body static.

Connectors should never be subjected to forced removal or refit, especially inter-board connectors. Damaged contacts can cause short-circuit and open-circuit fault conditions.

Prior to commencing test, and periodically during a test, touch a good vehicle body earth to discharge static charge. Some electronic components are vulnerable to the static electricity that may be generated by the operator.

Electrical Multiplugs Lubricate

In order to prevent corrosion, Some multiplugs under bonnet and carpet is wiped special lubricate in factory. If these is destroyed in maintaining, repair and replacing process, special lubricate should be newly wiped

Supplementary Restraint System Precautions

General Precautions

The SRS system contains components which could be potentially hazardous to the service engineer if not serviced and handled correctly. The following guidelines are intended to alert the service engineer to potential sources of danger and emphasise the importance of ensuring the integrity of **SRS** components fitted to the vehicle.

Warning: It is imperative that before any work is undertaken on the SRS system the appropriate information is read thoroughly.

Warning: It is imperative that before any work is undertaken on the SRS system the appropriate information is read thoroughly.

Warning: The airbag module contains sodium azide which is poisonous and extremely flammable. Contact with water, acid or heavy metals may produce harmful or explosive compounds. Do not dismantle, incinerate or bring into contact with electricity, before the unit has been deployed.

Warning: Always replace a seat belt assembly that has withstood the strain of a severe vehicle impact, or if the webbing shows signs of fraying.

Warning: Always disconnect the vehicle battery before carrying out any electric welding on a vehicle fitted with an SRS system.

Caution: Do not expose an airbag module or seat belt pre-tensioner to heat exceeding 85 °C.

It should be noted that these precautions are not restricted to operations performed when servicing the **SRS** system, the same care must be exercised when working on ancillary systems and components located in the vicinity of the **SRS** components; these include, but are not limited to:

- *Steering system* steering wheel airbag, rotary coupler.
- *Front fascia* passenger front airbag.
- *Interior trim* **ICS** Head Curtain Airbags (('A'-post trim, 'B'-post upper trim, grab handles, headlining above front doors) ; **SRS** Electronic Control Unit (ECU) (beneath centre console); side impact crash sensors (under carpet beneath front seats)
- *Seats* side (thorax) airbags.
- *Electrical system*–**SRS** harnesses, link leads and connectors.

Making the System Safe

Before working on, or in the vicinity of **SRS** components, ensure the system is rendered safe by performing the following procedures:

www.cargeek.ir

www.cargeek.ir

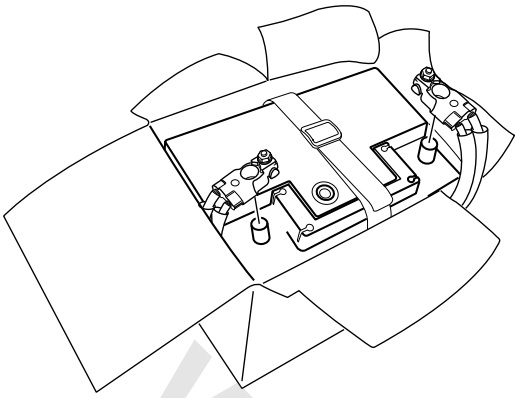

S003092

- Remove the handset from the docking station.
- Disconnect both battery leads, earth lead first.
- Wait 10 minutes for **SRS ECU** the SRS ECU back-up power circuit to discharge.

The **SRS** system uses energy reserve capacitors to keep the system active in the event of electrical supply failure under crash conditions. It is necessary to allow the capacitor sufficient time to discharge (10 minutes) in order to avoid the risk of accidental deployment.

Caution: Disconnect the battery before starting the SRS operation. Disconnect the battery negative terminal first. DO NOT disconnect the battery in the reverse order.

Installation

In order to ensure system integrity, it is essential that the SRS system is regularly checked and maintained **SRS** so that it is ready for effective operation in the event of a collision. Carefully inspect SRS components before installation. **SRS** Do not install a part that shows signs of being dropped or improperly handled, such as dents, cracks or deformation.

Warning: The integrity of the SRS system is critical for safety reasons.

Ensure the following precautions are always adhered to:

- Never install used SRS components from another vehicle **SRS** or attempt to repair an **SRS** component.
- Never use the SRS parts without a clear identification **SRS** label.
- Never use an airbag or **SRS** ECU that has been dropped.
- When repairing an SRS system only use **SRS** genuine new parts.
- Never apply electrical power to an SRS component unless instructed to do **SRS** so as part of an approved test procedure.
- Ensure the bolts are tightened to the correct torque. Always use new fixings **SRS** when replacing SRS components.
- Ensure the ECU is always installed correctly. **SRS ECU**. **SRS ECU** There must not be any gap between the ECU and the bracket to which it is mounted. **SRS ECU** An incorrectly mounted ECU could cause the system to malfunction.
- Do not supply power to the ECU are connected. **SRS** before all SRS components **SRS ECU** before all SRS components.

Caution: Ensure SRS components are not contaminated with oil, grease, detergent or water.

Caution: Torque wrenches should be regularly checked for accuracy to ensure that all fixings are tightened to the correct torque.

Caution: Following seat belt pretensioner deployment, the seat belts can still be used as conventional seat belts, but will need to be replaced as soon as possible to re-establish full SRS protection.

Caution: If the SRS component is to be replaced, the bar code of the new unit must be recorded.

SRS Component Testing Precautions

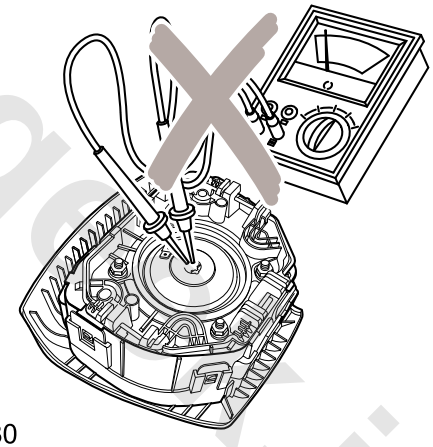

S003080

The **SRS** components are triggered using relatively low operating currents, always adhere to the following precautions:

Warning: Do not use a multimeter or other general purpose test equipment on SRS system components or accidental deployment may occur. Only use the recommended diagnostic equipment to diagnose system faults.

Warning: Do not use electrical test equipment on the SRS harness while it is connected to any of the SRS system components. It may cause accidental deployment and personal injury.

www.cargeek.ir

www.cargeek.ir

Handling and Storage

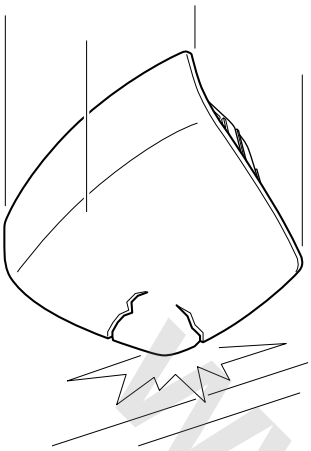

S003081

Always comply with the following handling precautions.

Warning: ***The SRS components are sensitive and potentially hazardous if not handled correctly; always comply with the following handling precautions:***

- ***ECU and airbag must be stored in a cabinet in a dry room at normal room temperatures not exceeding 85° C. Ensure that heating, fire, water and other chemical corrosive substances cannot contaminate the stored SRS components.***
- ***For safety reasons, do not store inflammable goods close to the area where the SRS components are stored.***
- ***Keep new airbag module in the original packaging, until just before fitting.***
- ***The storage area must comply with all legal requirements. It must have suitable fire extinguishers or other fire extinguishing equipment.***
- ***Never drop an SRS component. The airbag diagnostic control unit is a particularly shock sensitive device and must be handled with extreme care.***
- ***Never wrap your arms around an airbag module. If an airbag module has to be carried, hold it by the cover, with the cover uppermost and the base away from your body.***
- ***Never transport airbag modules or seat belt pre-tensioners in the cabin of a vehicle.***

Warning: Never attach anything to an airbag cover or any trim componentcovering an airbag module. Do not allow anything to rest on top of an airbag module.

Caution: Do not apply grease or cleaning solvents to seat belt pretensioner units, component failure could result.

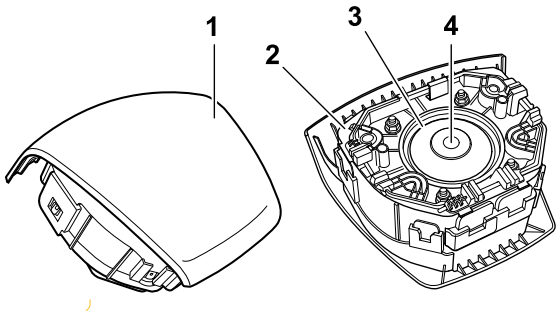

S003082

Warning: Store the airbag module with the deployment side uppermost. If it is stored deployment side down, accidental deployment will propel the airbag module with enough force to cause serious injury.

Warning: Airbag modules and seat belt pre-tensioners are classed as explosive devices. For overnight and longer term storage, they must be stored in a secure steel cabinet which has been approved as suitable for the purpose and has been registered by the local authority.

Warning: When recovering the seat belt pretensioner, DO NOT aim the piston pipe at yourself or others. Keep the pistons facing the ground. Hold the case instead of the seat belt.

Warning: Store the airbag module or seat belt pre-tensioners in a designated storage area.

Caution: Improper handling or storage can internally damage the airbag module, making it inoperative. If you suspect the airbag module has been damaged, install a new module and refer to theDeployment/Disposal Procedures for disposal of the damaged module.

SRS Harnesses and Connectors

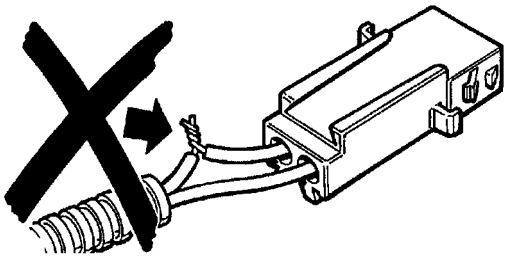

S003005

Always observe the following precautions **SRS** with regards to SRS system electrical wiring:

- Never attempt to modify, splice or repair **SRS** wiring.

www.cargeek.ir

www.cargeek.ir

- Never install electronic equipment (such as a mobile telephone, two-way radio or in-car entertainment system) in such a way that it could generate electrical interference in the airbag harness. Seek specialist advice when installing such equipment.

Note: SRS system wiring can be identified by a special yellow outer sleeve protecting the wires (black with yellow stripe protective coverings are sometimes used).

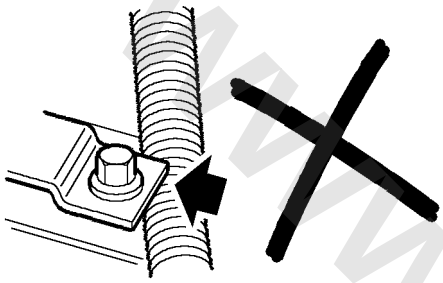

S003006

Warning: Always ensure SRS wiring is routed correctly. Be careful to avoidtrapping or pinching the SRS wiring. Do not leave the connectors hanging loose or allow SRS components to hang from their harnesses. Look for possible points of chafing.

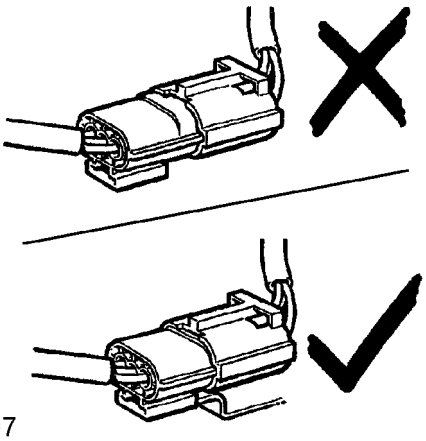

S003007

Precautions for Vehicle Owners

For the airbag to work effectively and protect vehicle owners, follow the precautions listed below.

Driver and passengers must use seat belts correctly. Correctly using the seat belts can protect the body and reduce injuries in the event of an accident.

Never fit any accessory that obstructs or impairs the operation of the seat belt pretensioners or airbags.

Do not place any object on the steering wheel or instrument panel that could penetrate an inflating airbag or be a thrown item likely to cause injury.

Never fit cover on seat which fitting side airbag.

Children under 12 years old should not sit in the front seat.

Only genuine accessory parts are allowed to be installed.

Only authorised people can remove airbag modules, ECU, SRS system wiring harness and connectors. **SRS ECU** and **SRS** system wiring harness and connectors.

If the airbag and seat belt pre-tensioner are deployed during an accident, **SRS ECU** must be replaced and discarded.

Every SRS system on every car **SRS** has been paired and identified, **SRS** illegally adding or modifying the SRS system and the wiring harness could injure people.

Modifying the vehicle structure or SRS system is strictly not allowed **SRS** and may cause wrong airbag deployment or failure to deploy when required.

Rotary Coupler Precautions

Caution: Always follow the procedure for fitting and checking the rotary coupler as instructed in the SRS repairs section. Comply with all safety and installation procedures to ensure the system functions correctly.

Observe the following precautions:

- Do not unlock and rotate the rotary coupler when it is removed from the vehicle.
- Do not turn the road wheels when the rotary coupler is removed from the vehicle.
- Always ensure the rotary coupler is removed and installed in its centred position and with the front road wheels in the straight ahead position - procedure. **SRS** refer to the SRS repair section for the correct removal and installation
- If a new rotary coupler is being installed, ensure the locking tab holding the coupler's rotational position is not broken; units with a broken locking tab should not be used.

Warning Labels

Warning symbols are displayed at various positions in the vehicle. **SRS** components have additional warning labels displayed on them to indicate that particular care is needed when handling them. These include airbag modules, **SRS ECU**, seat belt pre-tensioners and the rotary coupler.

The following warning symbols may be displayed at various locations on the vehicle:

www.cargeek.ir

www.cargeek.ir

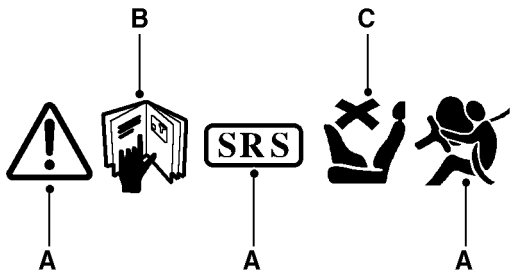

S003008

A The need for caution when working in close proximity to SRS components. **SRS** in close proximity to SRS components.

B Refer to the publication where the procedures, **SRS** instructions and advice can be found (usually Workshop Manual or Owner's Handbook) for working on the SRS system.

C Do not use rear facing child seats in the front passenger seat if the vehicle is fitted with a passenger airbag.

Warning: It is imperative that before any work is undertaken on the SRS system the appropriate information is read thoroughly.

The following list indicates possible locations and content for warning labels. Exact positions and content may vary dependent on model year, legislation and market trends.

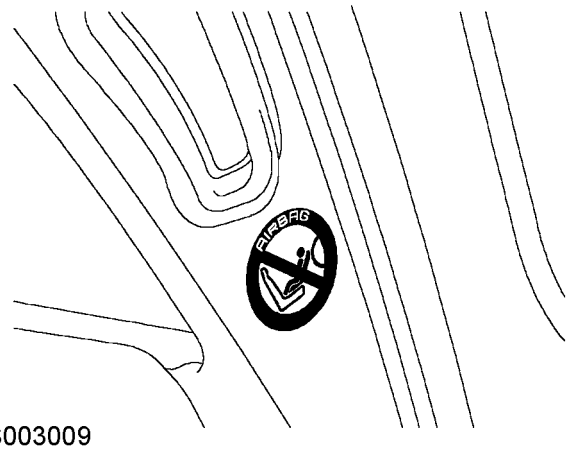

S003009

Do not use rear facing child seat in front passenger seat of vehicles fitted with passenger airbag.

Rotary Coupler

1. The need for caution when working **SRS** in close proximity to SRS components.
2. Refer to Workshop Manual for detailed instructions.
3. Ensure the wheels are in the straight ahead position before removal and refitting.
4. Bar code. The code number must be recorded if the rotary coupler is to be replaced.

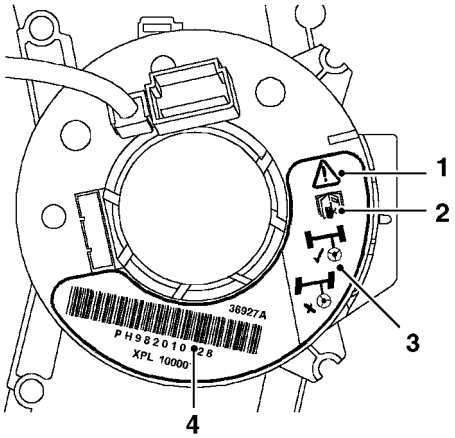

S003011

Bar Codes

Bar codes **SRS** are fitted to SRS system components and components **SRS** which are critically related to SRS operation. The code number(s) must be recorded if the component is to be replaced.

Components featuring bar codes include the following:

- Driver's front airbag module – label attached to rear of module housing
- Passenger front airbag module – label attached at side of module housing
- **SRS ECU** Included **SRS ECU** on label on top of ECU
- Rotary coupler – several labels on front face

Vehicle Recovery

Towing SRS Components Not Deployed

Normal towing procedures are unlikely to cause an airbag to deploy. However, as a precaution, remove the handset from the docking station and then disconnect both battery leads. Disconnect the negative '-' lead first.

Towing SRS Components Not Deployed

Once the driver ' s airbag has been deployed, the vehicle must have a suspended tow. However, as a precaution remove the handset from the docking station and then disconnect both battery leads. Disconnect the negative ' - ' lead first.

SRS Components Deployed

If a vehicle is to be scrapped and contains an undeployed airbag module, the module must be manually deployed.

Always observe the following precautions:

Warning: Only personnel who have undergone the appropriate training should undertake deployment of airbag and seat belt pre-tensioner modules.

Warning: A deployed airbag or seat belt pre-tensioner is very hot, DO NOT return to a deployed airbag module until at least 30 minutes have elapsed since deployment.

www.cargeek.ir

Warning: Only use approved deployment equipment, and only deploy SRS components in a well-ventilated designated area. Ensure SRS components are not damaged or ruptured before deployment.

Warning: Contact with chemicals from deployed and damaged SRS components could present a health hazard, wear protective clothing when handling. DO NOT eat, drink or smoke when handling SRS components.

Warning: Deployment of airbag modules and seat belt pre-tensioners can cause injury to personnel in the close vicinity of the deploying unit. In case of injury seek urgent medical advice. Possible sources of injury include:

- *impact - due to inflating airbag or pretensioner operation causing component 'kick'.*
- *hearing - due to noise produced by deploying airbags and seat belt pretensioner units.*
- *burns - hot component parts and gases.*
- *irritation to eyes and lungs - from deploying gases or combustion residue.*

Warning: Ensure the SRS component to be deployed is securely fastened to its mounting.

Warning: Compliance with the following precautions MUST be ensured:

- *Only use deployment equipment approved for the intended purpose.*
- *Before commencing deployment procedure, ensure the deployment tool functions properly.*
- *Deployment of airbag/pre-tensioner modules should be performed in a well ventilated area which has been designated for the purpose.*
- *Ensure airbag/pre-tensioner modules are not damaged or ruptured before attempting to deploy.*
- *Notify the relevant authorities of intention to deploy airbag and pretensioner units.*
- *When deploying airbag and seat belt pre-tensioner units, ensure that all personnel are at least 15 metres away from the deployment zone.*
- *When deploying seat belt pretensioners in the vehicle, ensure the pre-tensioner unit is fully secured to its fixing point.*
- *When removing deployed airbag and seat belt pre-tensioner modules, wear protective clothing. Use gloves and seal deployed units in a plastic bag.*
- *Following deployment of any component of the SRS system within the vehicle, all SRS components must be replaced. DO NOT re-use or salvage any parts of the SRS system.*
- *Do not lean over airbag modules or seat belt pre-tensioner units when connecting deployment equipment.*

www.cargeek.ir

www.cargeek.ir

www.cargeek.ir

SRS Component Replacement Policy

Impacts Which Do Not Deploy the Airbags or Pre-tensioners

Check for structural damage in the area of the impact, paying particular attention to bumper armatures, longitudinals, crash cans and bracketry.

Impacts Which Deploy the Airbags or Pre-tensioners

The replacement and inspection policy is dependent on the type and severity of the crash condition. **SRS**. The following guidelines are the minimum that should be exercised as a result of the deployment of specific SRS components:

Front Airbag Deployment (driver and passenger)

If the front airbags are deployed, the following parts must be replaced:

- Driver airbag module
- Passenger airbag module
- Flyleads (where applicable) connecting **SRS** front airbag modules to SRS harness
- Seat belt pre-tensioners
- Driver's seat belt retractor
- Rotary coupler
- **SRS ECU**

In addition, the following should be inspected for damage and replaced as necessary:

- Front passenger's seat belt retractor (webbing, tongue latching, 'D' loop, body anchorage point)
- Rear seat belt buckles (webbing, buckle covers, body anchorage and tongue latching function)
- Fascia moulding adjacent to passenger airbag module
- Steering wheel (if damage is evident)
- Front seat frames and head restraints (if there is evidence of damage to the seat frame or cushion pan)
- Steering column (if adjustment is lost or there are signs of collapse)
- Seat belt automatic height adjusters on 'BC' posts
- Rear seat belt escutcheons in parcel shelf trim

Side (Thorax) Airbags

If the side (thorax) airbags are deployed, the following parts must be replaced, on the side of the vehicle on which the deployment occurred:

- Seat (thorax) airbag module
- Seat squab foam
- Seat squab cover
- Front seat belt buckle pre-tensioners
- **SRS** ECU
- Side impact crash sensors (both sides of vehicle)

In addition, the following should be inspected for damage and replaced as necessary:

- Front seat belts (retractors, webbing, tongue latching, 'D' loop and body anchorage points)
- Rear seat belt buckles (webbing, buckle covers, tongue latching and body anchorage)
- Front seat frame (if there is evidence of external or airbag deployment damage to seat frame)
- 'BC' post internal finishers and fixings
- Door casings
- Seat belt automatic height adjusters on 'B' post
- Rear seat belt escutcheons in parcel shelf trim

Inflatable Curtain Structure (ICS) Airbags Modules

If the Inflatable Curtain Structure airbag modules are deployed, the following parts must be replaced, (**ICS**) on the side of the vehicle for which deployment occurred:

- **ICS** airbag module
- Link lead between airbag gas generator **SRS** and SRS harness
- Airbag retaining clips above window aperture
- 'A' post internal finisher
- Front seat belt pre-tensioners
- **SRS ECU**
- Side impact crash sensors (both sides of vehicle)

In addition, the following should be inspected for damage and replaced as necessary:

- Headlining
- **ICS** mounting brackets
- Alarm sensor
- Front seat belts (retractors, webbing, tongue latching, 'D' loop and body anchorage points)
- Rear seat belt buckles (webbing, buckle covers, tongue latching and body anchorage)
- 'BC' post upper finisher and fixings
- Door casing
- Seat belt automatic height adjusters on 'B' post
- Rear seat belt escutcheons in parcel shelf trim

Rear Impacts

Rear impacts may cause the seat belt pretensioners to deploy. If this occurs, all pretensioner units must be replaced. In addition, the following components should be inspected for damage and replaced as necessary:

www.cargeek.ir

www.cargeek.ir

- Front seat frames
- Seat belt automatic height adjusters on 'B'- post
- Front seat belts (retractors, webbing, tongue latching, 'D' loop and body anchorage points)
- Rear seat belt buckles (webbing, buckle covers, tongue latching and body anchorage)
- Rear seat belt escutcheons in parcel shelf trim
- **SRS ECU**

Periodic Replacement of SRS Components

The performance of the propellants within airbags and pre-tensioners will deteriorate over a period of time. As a result, it is essential that the airbags and pre-tensioners are periodically replaced to maintain occupant safety. Airbags, seat belt pre-tensioners and the rotary coupler should be replaced at 12 year intervals.

Air Conditioning System Precautions

General

The air conditioning system contains fluids and components which could be potentially hazardous to the service engineer or the environment if not serviced and handled correctly. The following guidelines are intended to alert the service engineer to potential sources of danger and emphasise the importance of ensuring the integrity of the air conditioning operating conditions and components fitted to the vehicle.

Where necessary, additional specific precautions are detailed in the relevant sections of this Manual which should be referred to prior to commencing repair operations.

The refrigerant used in the air conditioning system is HFC-134a (Hydrofluorocarbon) R134a.

Warning: Servicing must only be carried out by personnel familiar with both the vehicle system and the charging and testing equipment. All operations must be carried out in a well ventilated area away from open flame and heat sources.

Warning: R134a is a hazardous liquid and when handled incorrectly can cause serious injury. Suitable protective clothing, consisting of face protection, heat-proof gloves, rubber boots and rubber apron or waterproof overalls, must be worn when carrying out operations on the air conditioning system.

Remedial Actions

If an accident involving R134a should occur, conduct the following remedial actions:

- If liquid R134a enters the eye, do not rub it. Gently run large quantities of eye wash over affected eye to raise the temperature. If an eye wash is not available, cool, clean water may be used to flush the eye. After rinsing, cover the eye with a clean pad and seek immediate medical attention.
- If liquid R134a is splashed onto the skin, run large quantities of water over the affected area to raise the temperature. Implement the same action if the skin comes in contact with discharging cylinders. Wrap the contaminated body parts in blankets (or similar materials) and seek immediate medical attention.
- If the debilitating effects of inhalation of R134a vapour is suspected, seek fresh air. If the affected person is unconscious, move them away from the contaminated area to fresh air and apply artificial respiration and/ or oxygen and seek immediate medical attention.

www.cargeek.ir

www.cargeek.ir

Warning: Due to its low evaporating temperature, R134a must be handled with care. R134a splashed on any part of the body will cause immediate freezing of that area. Also, refrigerant cylinders and replenishment trolleys when discharging will freeze skin to them if contact is made.

Service Precautions

Observe the following precautions when handling components used in the air conditioning system:

- Air conditioning units must not be lifted by their hoses, pipes or capillary lines.
- Hoses and lines must not be subjected to any twist or stress; the efficiency of the system will be impaired by kinks or restrictions. Ensure that hoses are correctly positioned before tightening couplings, and ensure that all clips and supports are utilised.
- Flexible hoses should not be positioned close to the exhaust manifold (less than 100 mm) unless protected by heat shielding.
- Completed assemblies must be checked for refrigeration lines touching metal panels. Any direct contact of components and panels may transmit noise and so must be eliminated.
- The appropriate torque wrench must be used when tightening refrigerant connections to the stipulated value. An additional spanner must be used to hold the union to prevent twisting of the pipe when tightening connections.
- Before connecting any hose or pipe, ensure that refrigerant oil is applied to the seat of the new O-rings, BUT NOT to the threads of the connection.
- All protective plugs must remain in place to seal the component until immediately prior to connection.
- Ensure components are at room temperature before uncapping, to prevent condensation of moisture from the air that enters it.
- Components must not remain uncapped for longer than 15 minutes. In the event of a delay, the caps must be fitted.
- When disconnecting, immediately cap all air conditioning pipes to prevent ingress of dirt and moisture into the system.
- The receiver/drier contains desiccant which absorbs moisture. It must be positively sealed at all times. A receiver/drier that has been left uncapped must not be used, fit a new unit.
- The receiver/drier should be the last component connected to the system to ensure optimum dehydration and maximum moisture protection of the system.
- Whenever the refrigerant system is opened, the receiver/drier must be renewed immediately before evacuating and recharging the system.
- Use alcohol and a clean lint-free cloth to clean dirty connections.
- Ensure that all new parts fitted are marked for use with R134a.

Refrigerant Oil

Refrigerant oil easily absorbs water and must not be stored for long periods. Do not pour unused refrigerant oil back into the container. Always use an approved refrigerant oil.

When replacing components in the A/C system, drain the refrigerant oil from the component being replaced into a graduated container. On assembly, add the quantity of refrigerant oil drained to the new component.

Compressor

A new compressor is sealed and pressurised with Nitrogen gas. When fitting a new compressor, slowly release the sealing cap; gas pressure should be heard to vent as the seal is broken.

Caution: Do not remove the cap(s) until immediately prior to connecting the air conditioning pipes to the compressor.

Rapid Refrigerant Discharge

If the air conditioning system is involved in accident damage and the system is punctured, the refrigerant will discharge rapidly. The rapid discharge of refrigerant will also result in the loss of most of the oil from the system. The compressor must be removed and all the remaining oil in the compressor drained and refilled as instructed in the air conditioning section of this manual.

Precautions for Refrigerant Recovery, Recycling and Recharging

When the air conditioning system is recharged, any existing refrigerant is first recovered from the system and recycled. The system is then charged with the required weight of refrigerant and volume of refrigerant oil.

Warning: Refrigerant must always be recycled before re-use to ensure that the purity of the refrigerant is high enough for safe use in the air conditioning system.

Warning: Recycling should always be carried out with equipment which is design certified by Underwriter Laboratory Inc. for compliance with SAE J1991. Other equipment may not recycle refrigerant to the required level of purity.

Warning: A R134a Refrigerant Recovery Recycling Recharging Station must not be used with any other type of refrigerant.

www.cargeek.ir

www.cargeek.ir

***Warning:** Refrigerant R134a from domestic and commercial sources must not be used in motor vehicle air conditioning systems.*

***Caution:** The system must be evacuated immediately before recharging commences. Delay between evacuation and recharging is not permitted.*

Air Conditioning Compressor Replacement Replacement Instructions

A new compressor is supplied filled with a full charge of refrigerant oil. The new compressor must be drained and a calculated quantity of oil added before fitting. To calculate the quantity of oil to be added, carry out the following procedure:

1. Remove the filler/drain plug from the old compressor.
2. Invert the compressor and gravity drain the oil into a calibrated measuring cylinder. Rotate the compressor clutch to ensure the compressor is completely drained.
3. Record the quantity of oil drained, discard the oil.
4. Remove the filler/drain plug from the new compressor.
5. Invert the compressor and gravity drain the oil into a calibrated measuring cylinder. Rotate the compressor clutch to ensure the compressor is completely drained.
6. Add the same amount of oil drained from the old compressor to the new compressor.
7. Discard the remaining oil drained from the new compressor.
8. Fit and tighten the compressor filler/drain plug.

www.cargeek.ir

www.cargeek.ir

www.cargeek.ir

Lifting & Towing

Lifting Vehicle

Description

Before lifting the vehicle, note the followings:

- The vehicle shall be parked on a level and firm ground.
- Put the hand brake in place.
- Select P or N gear.

To avoid damage to the underbody parts, please follow the procedures below:

Do not put the jack or axle bracket under the following components:

- Body Structural Parts
- Bumper
- Fuel Line
- Brake Line
- Front Suspension Arm
- Steering Connecting Mechanism
- Rear Suspension Arm
- Fuel Tank
- Engine Oil Pan
- Transmission Housing
- Rear Towing Eye

Note: Jacking and supporting the front of the vehicle should only be done under the customer front jacking points and/or the jacking bracket on the front section of the front subframe.

Front/Rear Supporting Point of the Vehicle

The jack of the vehicle is only applied to replace wheels in emergency. Do not use it for other purposes.

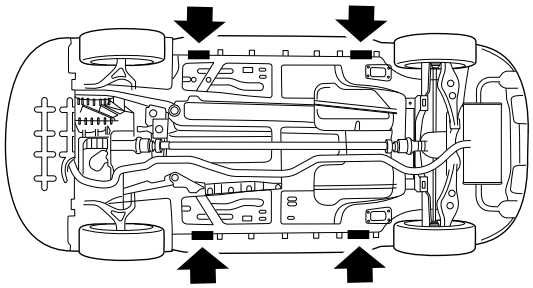

S0000109

If use the jack to replace wheels, ensure that the jack is placed on a solid level ground and under the supporting point near the wheel to be removed. Note: the round head of the jack must be in the corresponding slot on the baseplate.

Warning: Do not work on or under a vehicle supported only by a jack. Always support the vehicle on safety stands.

Hydraulic Jack

The hydraulic jack to be used must have a bearing capacity of at least 1500kg (3,300lbs).

Warning: Do not commence work on the underside of the vehicle until suitable safety supports have been positioned under the sill reinforced brackets.

Warning: Always chock the wheels when jacking.

Lifting and Supporting the Vehicle

Put the head of the jack at the lifting point of the front/rear doorsill of the vehicle.

Caution: Do not jack or support the vehicle on any other points than those indicated. Failure to comply is likely to result in damage to the body or chassis components.

Warning: Do not commence work on the underside of the vehicle until suitable safety supports have been positioned under the sill reinforced brackets.

Warning: Always chock the wheels when jacking.

Column Lifter

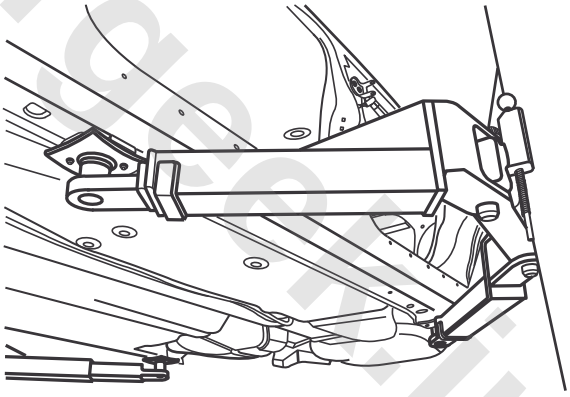

S003031

Put the mat under the jacking point on the sill.

www.cargeek.ir

Roadside Assistance

Instructions for Roadside Assistance

It is recommended that a rescue trailer or a two-wheel rescue vehicle shall be used. In emergency, towing the vehicle with front towing point.

Front Towing Eye

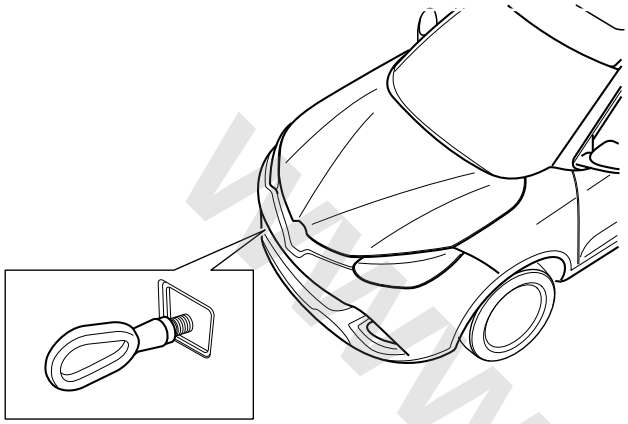

S0000101

In the front of the vehicle, removable towing eye can be used for rescue operation. The front towing eye is usually kept in the vehicle toolbox and should be put back after use. To fit the towing eye, the towing eye cover at the right side of the front bumper shall be removed first, then screw the towing eye into the mounting position of the front bumper assembly (bumper beam).

Rear Towing Hook

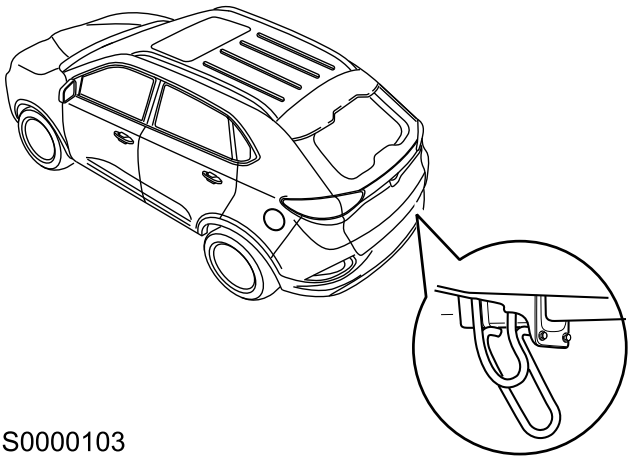

S0000103

The fixed rear towing hook can only tow the light vehicles. The rear towing point of the vehicle equipped with manual transmission can be used for rear towing.

Caution: A rear suspended tow must not be used for vehicles with an automatic transmission, as serious damage will be caused to the transmission.

Dual Clutch Automatic Transmission (2WD)

Generally, the vehicles with dual clutch automatic transmission should be towed with the front wheels off the road (the front wheels hanged up).

Caution: A rear suspended tow must not be used for vehicles with an automatic transmission, as serious damage will be caused to the transmission.

When the vehicles with dual clutch automatic transmission are towed with four wheels from front, attention must be paid to the followings:

Warning: When the vehicle is being towed.

- ***The selector must be at 'N'.***
- ***The vehicle must not be towed at speeds greater than 30 km/h or for a distance exceeding 50 km.***
- ***Do not tow if the gearbox or a drive shaft is faulty.***
- ***Ensure the gear lever is in neutral and the parking brake is released.***
- ***Remember that greater effort than normal will be necessary to operate the brakes and steering if the vehicle is being towed without the engine running.***

Caution: Do not tow on four wheels if the gearbox or drive shafts are touching the body or frame.

Note: A vehicle with an automatic transmission cannot be started by towing or pushing.

AWD Vehicles

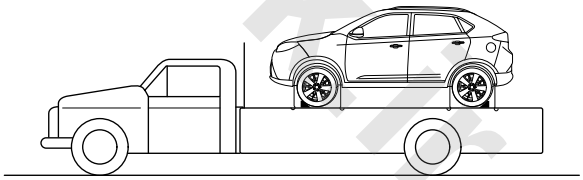

S0000107

For **AWD** vehicles, the vehicle shall be towed with all wheels off the ground, this operation involves use of the wheel lift, wheel trolley or flat-bed trailer.

www.cargeek.ir

Vehicle Identification Number

Vehicle Identification Number

Vehicle Identification Number (VIN)

For example, LSJA24W6XDSXXXXXX

LSJ	Code of Vehicle Manufacturer
A2	Model/Type
4	Body Structural Characteristics 4 = 5-Door Hatchback
W	Engine W = Gasoline Engine 2.0T
X	Check bit (represented by any figure from 0 to 9 or letter X)
6	Occupant Restraint System 6 = Seat Belt, Driver, Front Passenger Frontal Airbag and Side Airbag
D	Model Year D = 2013
S	Assembly Plant S = Shanghai Lingang
XXXXXX	6 digits = Production Sequential Number

VIN Also printed at the following locations:

The plane behind the lower left corner of the windshield.

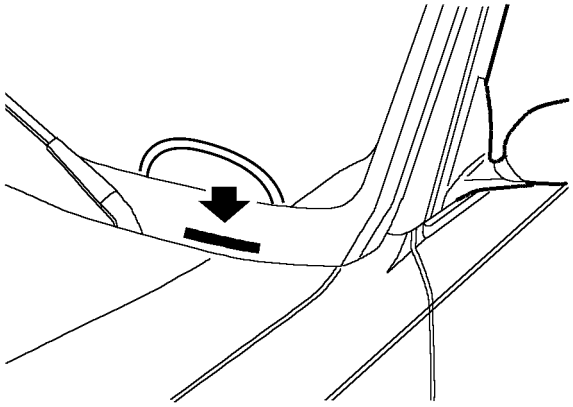

S003020

Printed on the seat beam under the right seat.

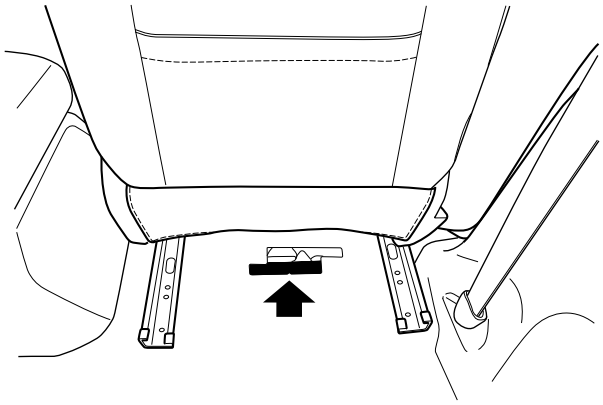

S0000104

Position of Identification Plate

The identification plate is located at the lower side of the right B-pillar.

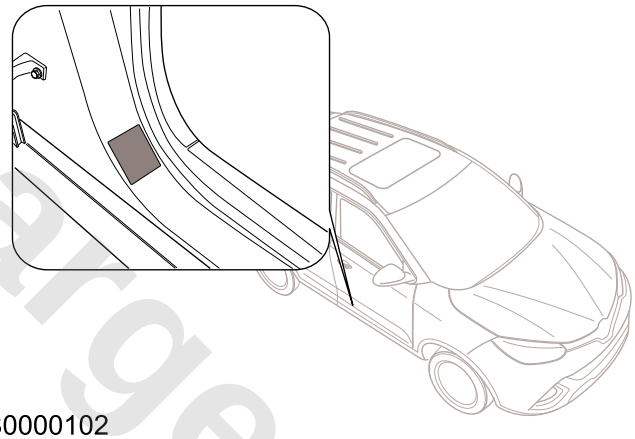

S0000102

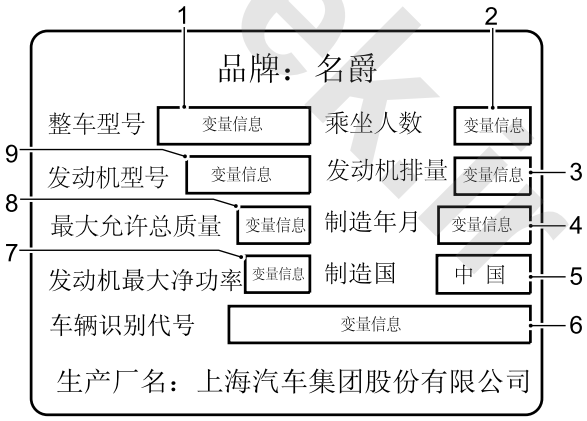

Identification plate contains the following information:

1. Vehicle Model
2. Number of Occupants
3. Engine Displacement
4. Manufacturing Date
5. Manufacturing country
6. Vehicle Identification Number （ **VIN** ）
7. Maximum Net Engine Power

www.cargeek.ir

www.cargeek.ir

8. Maximum Authorized Total Mass
9. Engine Model

Position of Other Plates

Engine Number

Printed on the left rear part of the cylinder block, as shown by the arrow.

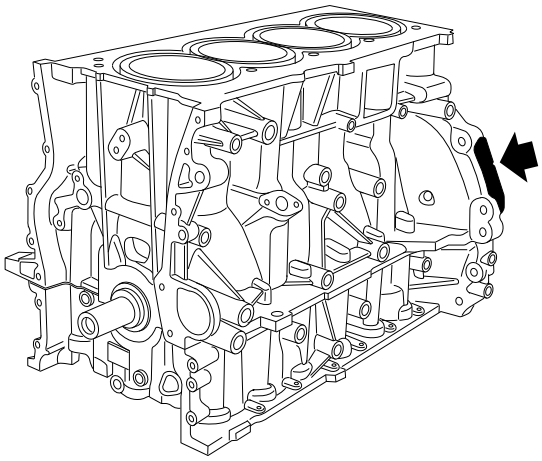

Engine Number

Printed on the left rear part of the cylinder block, as shown by the arrow.

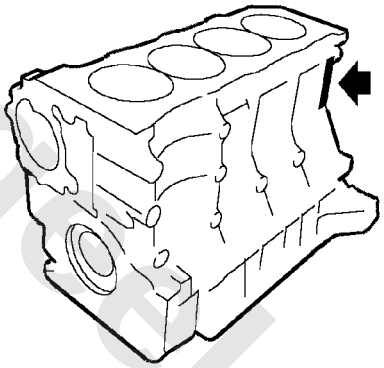

S003028

Dual Clutch Automatic Transmission Number

Printed on the top surface of the transmission housing, see the figure below.

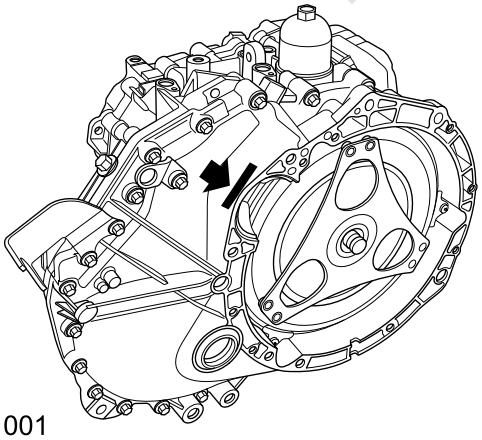

S0001001

www.cargeek.ir

www.cargeek.ir

www.cargeek.ir

Automatic Transmission Number - 7AT

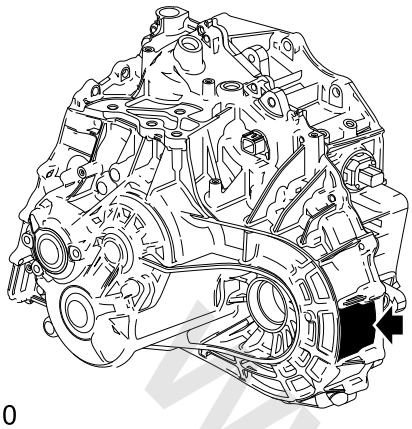

S0000110

The label is printed on the surface of the transmission housing.

Manual Transmission Number - 6MT

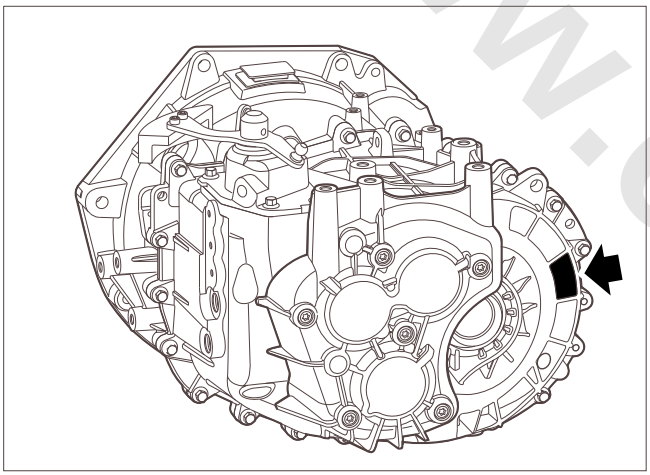

The label is printed at the right side of the transmission housing.

www.cargeek.ir

www.cargeek.ir

www.cargeek.ir

Lubrication & Maintenance

Capacity

Liquid Capacity

The following capacity values are merely approximate value for the corresponding system.

Component/System	Capacity
Fuel Tank: Serviceable	55 L
Engine-2.0T : Replacement of the Engine Oil and Oil Filter	6.0 L
Engine-1.5T : Replacement of the Engine Oil and Oil Filter	5.5 L
Dual Clutch Automatic Transmission Refill from Dry State	6.5 L
Manual Transmission – SCM250: Refill Refill from Dry State	2.2 L 2.5 L
Automatic Transmission - 7AT: Refill	2.45 L
Power Takeoff (Refill from Dry State)	0.58 L
FDU (Refill from Dry State)	0.56 L
Cooling System: Engine - 2.0T	8.2 L
Cooling System: Engine - 1.5T	7.1 L
Brake Fluid for Brake System (Refill from Dry State)	0.8 L
Windshield Washer Reservoir	2.0 L

Fluid

Fuel

Following recommended oils must be applied:

For gasoline engines,

RON 95 and above gasoline is recommended.

Antifreeze Fluid

The mixture with 50% water and 50% **OAT** shall be used. The antifreeze containing organic acid technology (**OAT**) preservative and summer coolant or ethylene-glycol-based antifreeze (methanol not contained) are applied to protect the cooling system. Only the antifreeze with **OAT** antiseptic can be used.

Do not use other types of antifreeze to supplement or refill the cooling system. In emergency, if the antifreeze of this type is unavailable, the clean water can be used to fill the cooling system. However, this may lower the frost protection capability. The correct antifreeze concentration must be recovered as soon as possible.

When it is time for inspection specified in the Maintenance List, drain the cooling system and clean it, then refill the cooling system with appropriate coolant.

After refilling antifreeze, attach the warning label at a prominent position of the vehicle to show the type of antifreeze used in the cooling system, so that correct antifreeze can be used for next refill.

Concentration of Antifreeze Fluid

The overall antifreeze concentration shall not be less than 50% of the volume, meanwhile make sure the antisepsis property of the coolant. Antifreeze concentration more than 60% is not recommended as it will weaken the cooling efficiency.

The antifreeze capacity recommended in the following table shall provide frost protection at -37°C ~ -40°C.

Engine - 2.0T

Concentration	50%
Capacity of Antifreeze Fluid	4.1L

Engine-1.5T :

Concentration	50%
Capacity of Antifreeze Fluid	3.55L

Brake Fluid

Use brake fluid DOT4 only.

www.cargeek.ir

Lubricating Fluids

Overview

The engine and other lubrication systems are filled with high-performance lubricating fluid to extend the service life.

Caution: Always use a high quality oil of the correct viscosity range in the engine. The use of oil of the incorrect specification can lead to high oil and fuel consumption and ultimately to damaged components.

The use of the engine oil of recommended specifications containing additives may decrease the corrosive acid caused by combustion and prevent formation of residues. These residues may block the oil passage. Other engine oil additives should not be used. Repair and maintenance must be carried out within the specified interval.

Engine Oil

5W/30 engine oil in compliance with ACEA C3 specifications should be used. The engine oil viscosity/temperature range refers to the following table:

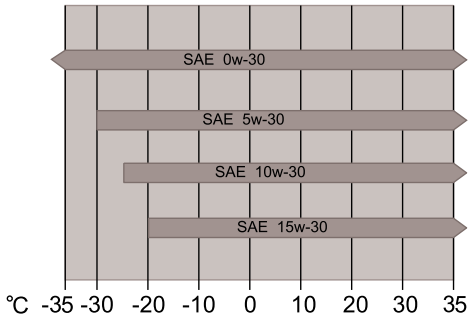

Transmission Fluid

Failure to use the specified transmission fluid may result in serious damage to the transmission.

Dual Clutch Automatic Transmission-6 Speed

Please refill with PENTOSIN FFL-2.

Dual Clutch Automatic Transmission-7 Speed

Please refill with DEXRON ·DCT Fluid.

Power Takeoff and Rear Axle Assembly

Please refill with Idemitsu Apolloil Wide Gear LW 80W-90 GL5.

General Lubricating Grease

Use FN745/94 grease produced by Fuchs.

Engine Cover Lock Body

Use FN745/94 grease produced by Fuchs.

Lock, Lock Body and Hinge

Do not apply any lubricating grease on the fixing end of the torsion bar spring, however, Krupp Isoflex Topas L32CN grease is recommended for its rotating end.

Washer Fluid

Use QX-35 washer fluid.

www.cargeek.ir

www.cargeek.ir

www.cargeek.ir

Engine mechanical system-2.0T

Specifications

Torque

Description	Value
Bolt - mechanical vacuum pump to cylinder head	13-15Nm
Bolt - VVT Control valves to CVVT housing	5–7Nm
Bolt - CVVT Housing to camshaft cover	9-11Nm
Stud- thermostat housing to cylinder block	3-5Nm
Bolt - thermostat housing to cylinder block	9-11Nm
Bolt - thermostat housing bracket to block and cylinder head	22-28Nm
Bolt - turbocharger bracket to turbocharger	40–45Nm
Bolt - turbocharger bracket to crankcase	50–60Nm
Bolt - auxiliary pump bracket and CAC hose bracket to cylinder head	9–11Nm
Bolt - VVT unit to camshaft	40Nm+120°
Bolt -oil separator to camshaft cover	9–11Nm
Bolt - camshaft cover to cylinder head	9–11Nm
Nut - exhaust manifold to cylinder head	23–27Nm
Bolt -exhaust manifold heat shield to exhaust manifold	22–28Nm
Nut - intake manifold to cylinder head	23–27Nm
Spark plugs	15-20Nm
Bolt - piston cooling jets to crankcase	18–22Nm
Bolt - crankshaft trigger wheel to crankshaft	10–12Nm
Bolt - crankshaft retainer to cylinder block	9–11Nm
Bolt - connecting rod	25Nm+90°
Bolt - bearing cap to cylinder block	9–11Nm
Bolt - flywheel to crankshaft	20Nm+60°
Bolt - PAS bracket to cylinder head	23–27Nm
Bolt - chain guide rail upper to camshaft cover	9–11Nm
Bolt - cylinder head heat shield to camshaft cover	9–11Nm
Bolt - turbocharger outlet pipe to cylinder head heat shield bracket	8–12Nm
Nut - turbocharger inlet pipe to camshaft cover Stud	8–12Nm
Bolt -oxygen sensor connector bracket to camshaft cover	8–12Nm
Bolt -camshaft inspect cover to camshaft cover and cylinder head	5–7Nm
Bolt -low pressure tube bracket to camshaft cover	9–11Nm
Stud - camshaft cover to cylinder head	9–11Nm
Stud- inlet manifold to cylinder head	9–11Nm
Bolt- intake manifold bracket to intake manifold	22–28Nm
Stud- exhaust manifold to cylinder head	13–17Nm
Stud-turbocharger to exhaust manifold	8–12Nm
Bolt - oil pump to bedplate	23–27Nm
Bolt - oil pump procket to oil pump	68–72Nm

www.cargeek.ir

www.cargeek.ir

Description	Value
Plug - sump drain	20–25Nm
Oil filter	20–25Nm
Bolt -oil pick pipe to oil pump	9–11Nm
Bolt - oil pick pipe bracket to bedplate	13–17Nm
Bolt -oil pick pipe to oil pick pipe bracket	9–11Nm
Bolt - sump and chain bedplate	8–12Nm
Bolt-Air conditioner compressor to engine	19–25Nm
Bolt - transmission to engine	75–90Nm
Bolt - bearing cap to cylinder block	35Nm +90°+45°
Bolt - bedplate to cylinder block	23-27Nm
Bolt - engine lifting eye	22–28Nm
Bolt - timing chain cover to engine	80–90Nm
Idler -idler A to timing chain cover	32–38Nm
Bolt - timing chain cover to engine	23–27Nm
Bolt - timing chain cover to engine	9-11Nm
Bolt - sump to timing chain cover	9-11Nm
Idler -idler C to cylinder block	45–55Nm
Bolt - PAS pulley to PAS idler	9–11Nm
Bolt - water pump pulley to water pump	7.5–10.4Nm
Bolt - Fuel pipe fixed bracket to engine	19–25Nm
Bolt - oil pump chain tensioner to bedplate	20–24Nm
Bolt - chain guide rail and chain tensioner rail	20-24Nm
Bolt - timing chain tensioner to cylinder block	9–11Nm
Bolt - torsion vibration damper to crankshaft	85Nm+90°
Bolt - engine mounting to body	90–110Nm
Bolt -engine mounting to engine	50Nm+90°
Bolt - transmission mounting bracket	55–65Nm
-	
Nut - transmission bracket to transmission mounting	90–110Nm
Bolt-compressor/condenser pipe to compressor	19-25Nm
Bolt - coolant outlet tube to twin clutch sportronic transmission	7–10Nm
clamp- clamp to twin clutch sportronic transmission	7–10Nm
Bolt - cylinder head to cylinder block	45Nm+90°+90°
Nut - turbocharger to exhaust manifold	28–32Nm
Bolt - turbocharger outlet oil tube to turbocharger	9–11Nm
Bolt - turbocharger outlet oil tube bracket to exhaust manifold	22-28Nm
Bolt - turbocharger outlet oil tube to turbocharger inlet oil tube	9–11Nm
Bolt - turbocharger inlet oil tube to turbocharger	18–22Nm
Nut - turbocharger outlet pipe to turbocharger	35–40Nm
Nut - turbocharger inlet pipe to turbocharger	35–40Nm

www.cargeek.ir

www.cargeek.ir

Description	Value
Bolt -turbocharger heat shield to turbocharger	22–28Nm
Bolt - turbocharger outlet oil tube to crankcase	9–11Nm
Nut - turbocharger inlet oil tube to crankcase	18–22Nm
Bolt - CAC hose bracket to CAC hose	5.5Nm
Bolt - CAC hose bracket to intercooler	10–15Nm
Bolt - WAPU to cylinder block	22-28Nm
Bolt - coolant inlet pipe to WAPU	8–12Nm
Bolt - coolant inlet pipe to cylinder block	8–12Nm

www.cargeek.ir

www.cargeek.ir

Parameters

NLE-2.0T Engine Assembly

Model	2.0 L gasoline engine, 16 valves, dual overhead camshaft, variable intake/exhaust cam timing
Cylinder Arrangement	4 cylinders, inline
Cylinder Bore Diameter	Φ88mm
Stroke	82mm
Displacement	1.995 L
Ignition Sequence	1-3-4-2
Compression Ratio	10
Direction of Rotation	Clockwise (when viewed from the front engine)
Rated Power	162kW/5000-5300rpm
Max Torque	350Nm/2500-4000rpm
Idle Speed	700rev/min
Max Engine Speed	6500rpm
Weight (excluding engine oil, A/C, clutch assembly)	153.2kg

www.cargeek.ir

www.cargeek.ir

www.cargeek.ir

Crankshaft

Cylinder Block/Skirt Rack Classification/Dimension Grade A Grade B Grade C	 Φ56.000-Φ56.005mm Φ56.006-Φ56.011mm Φ56.012-Φ56.019mm
Tolerance of Crankshaft Main Journal Grade 1 Grade 2 Grade 3	 Φ51.9810-Φ51.9879mm Φ51.9880-Φ51.9939mm Φ51.9940-Φ52.0000mm
Diameter of Crankshaft Connecting Rod Journal	Φ51.981-Φ52.000mm
Cylindricity	0.004
Quantity of Main Bearing Shell	5 Pieces for Upper/Lower Sides Respectively
Model	Upper Main Bearing Shell with Oil Hole and Oil Circuit
Thrust Washer	Two half washers are fixed on the left/right thrust wahser at the 4th main bearing seat, which fit the thrust surface.
Thickness of Thrust Washer	2.413-2.463mm
Crankshaft Axial Clearance	0.094-0.277mm

www.cargeek.ir

www.cargeek.ir

www.cargeek.ir

Cylinder Block and Piston

Cylinder Block:	
Material of Cylinder Block	Aluminum Alloy
Cylinder Liner Type	Precast Liner
Cylinder Liner Diameter	Φ88-Φ88.01mm
Connecting Rod:	
Model of Connecting Rod	Fractured Connecting Rod, C70S6
Distance between Centres of Connecting Rod	150.5
Piston Pin Type	Full Floating
Fitted Connecting Rod	Gap
Length of Piston Pin	56.7-57mm
Connecting Rod Bearing Shell:	
Gap	0.023-0.073mm
Piston:	
Model	Alluminium Alloy Piston
Piston Diameter	Φ87.965±0.009mm
Tolerance of Piston Pin Bore	Φ23 (+0.005 , +0.013) mm
Max Ovality	0.5±0.03 at 36 0.7±0.03 at 10
Piston Ring:	
Model	Second Compression Ring, 1st Oil Ring
Top Compression Ring	Steel Strip Ring, Height of Ringe: 1.2 (-0.03, -0.01)
Second Compression Ring	Cast Iron Ring, Height of Ring: 1.2 (-0.03, -0.01)
Oil Ring	Two-piece Oil Ring, Height of Ring: 2.0 (-0.03, -0.01)
Tolerance between Piston Ring and Ring Groove:	
Top Compression Ring	0.04-0.08mm
Second Compression Ring	0.03-0.07mm
Oil Ring	0.02-0.06mm
Gap of Piston Ring Notch:	
Top Compression Ring	0.20-0.35mm
Second Compression Ring	0.40-0.60mm
Oil Ring	0.20-0.40mm
Radial Width of Piston Ring:	
Top Compression Ring	3.1±0.10mm
Second Compression Ring	3.6±0.10mm
Oil Ring	2.75±0.15mm

www.cargeek.ir

Cylinder Head and Valve

Cylinder Head:	
Material	Aluminum Alloy
Planeness of 25*25 Area	0.0075mm
Cylinder Head Height: Planeness	137±0.05mm 0.08mm
Camshaft:	
Model	Dual Overhead Assembled Camshaft
Bearing	6th Gear Bearing
Drive	Timing Chain Drive
Camshaft Axial Clearance	0.07-0.22mm
Camshaft Journal	Diameter of 1st Gear Journal: Φ31.957-Φ31.972mm Diameter of 2-6 Gear Journal: Φ24.96-Φ24.98mm
Bearing Clearance	Clearance of 1st Gear Bearing: 0.04-0.075mm Clearance of 2-6 Gear Bearing: 0.02-0.061mm
Hydraulic Tappet:	
Model	Hydraulic tappet, roller rocker arm
OD of Hydraulic Tappet	Φ11.994±0.006mm
Valve Timing	Initial assembly timing is as follows:
Intake Valve: ON OFF Max. lift	 20°CA ATDC 80°CA ABDC 40°CA BBDC
Exhaust Valve: ON OFF Max. lift	 64°CA BBDC 4°CA BTDC 56°CA ABDC
Valve Stem Diameter: Intake Valve Exhaust Valve	 Φ5.475±0.0075mm Φ5.455±0.0075mm
Clearance between Valve Stem and Valve Guide: Intake Valve Exhaust Valve	 0.0175–0.0445mm 0.0375–0.0645mm
Valve Stem Height A: New Intake Valve New Exhaust Valve	 49.9-50.4mm 50.09-50.59mm

www.cargeek.ir

www.cargeek.ir

Valve Head Diameter:	
Intake Valve	Φ34.2±0.1mm
Exhaust Valve	Φ28.3±0.1mm
Valve Thickness:	
Intake Valve	1.65±0.15mm
Exhaust Valve	1.75±0.15mm
Length of Intake Valve	113.4-113.9mm
Length of Exhaust Valve	116.29-116.79mm
Valve Surface Angle -Intake Valves & Exhaust Valves	45°15¢±15¢
Valve Spring:	
Free Length	52.3mm
Mounting Length	40.2mm
Assembly Load	250N
Intake Valve Max. Opening/Load	533N
Exhaust Valve Max. Opening/Load	533N

www.cargeek.ir

www.cargeek.ir

Lubrication

Lubrication	
Oil Pump Model	External Gear Pump
Free Length of Pressure Relief Valve Spring	45mm
Oil Filter	Oil Filter (Full Flow)
Cutoff Pressure of 1000r/min Pressure Relief Valve	0.5-0.6Mpa, oil temperature: 90°

Spark Plug

Spark Plug	
Supplier: Clearance:	NGK 0.7-0.8mm
Manufacturer of Ignition Coil	UAES
Primary Resistance	0.453Ω±12%
Secondary Resistance	9.64KΩ±12%

www.cargeek.ir

www.cargeek.ir

Description and Operation

System Layout

Engine Layout

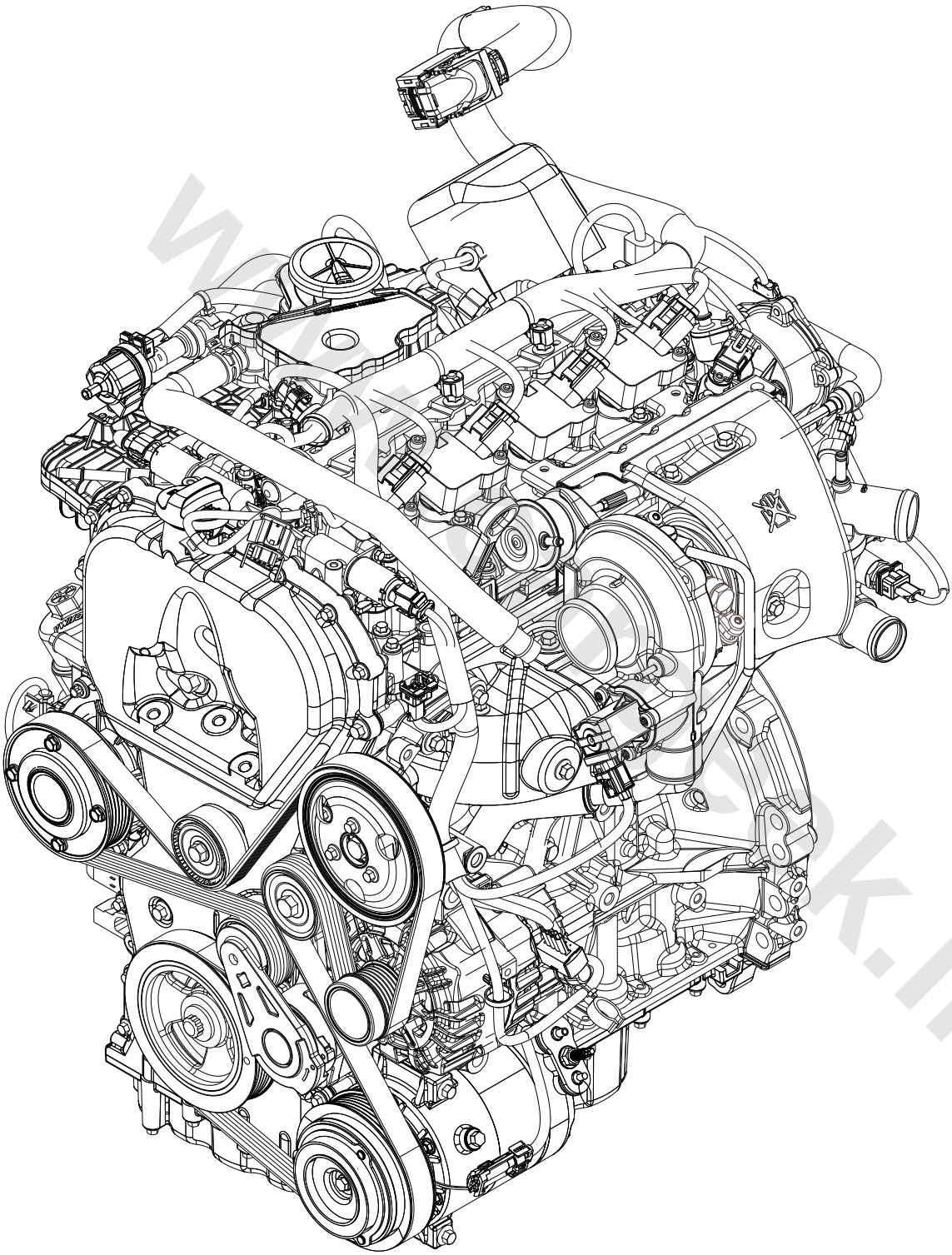

S1110100

1. 2.0T Engine

www.cargeek.ir

Cylinder Block Exploded View

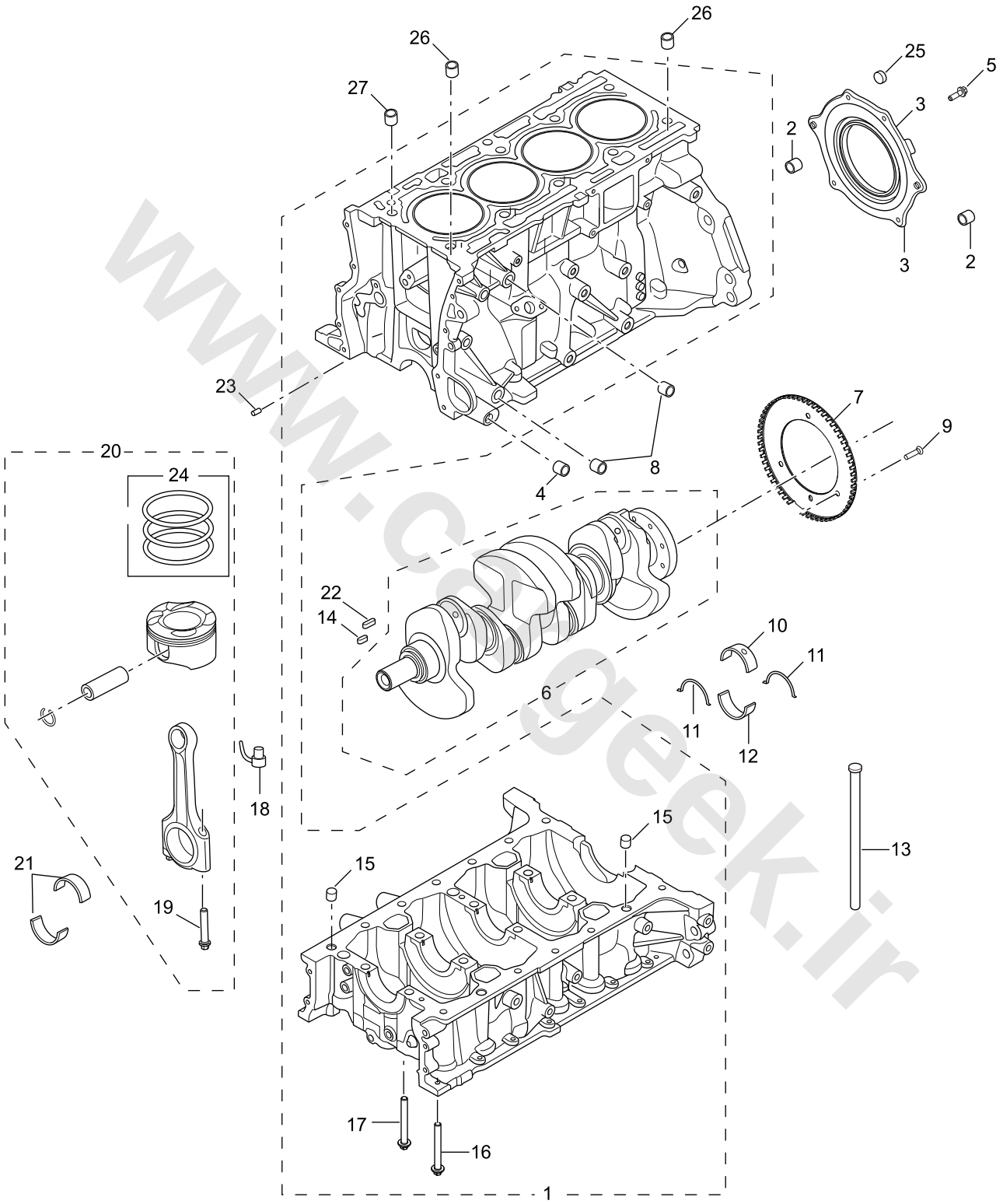

S1110101

1. Cylinder Block Assembly
2. Transmission Locating Pin
3. Rear Crankshaft Oil Seal
4. Locating Pin - A/C Compressor
5. Screw - Rear Crankshaft Oil Seal
6. Crankshaft Assembly
7. Crankshaft Signal Wheel
8. Locating Pin - Engine
9. Screw - Crankshaft Signal Wheel
10. Crankshaft Main Bearing Shell (Upper)

www.cargeek.ir

11. Crankshaft Thrust Washer
12. Crankshaft Main Bearing Shell (Lower)
13. Engine Oil Return Pipe
14. Crankshaft Torsional Vibration Damper Button
15. Cylinder Block Locating Pin
16. Bolt - Engine Skirt Rack
17. Bolt - Engine Skirt Rack
18. Piston Cooling Nozzle
19. Bolt - Connecting Rod
20. Piston Connecting Rod Assembly
21. Connecting Rod Bearing Shell
22. Crankshaft Key
23. Locating Pin - Timing Chain Cover
24. Piston
25. Plug - Cylinder Block Oil Passage
26. Cylinder Head Locating Pin
27. Oil Check Valve

www.cargeek.ir

www.cargeek.ir

Cylinder Head Exploded View

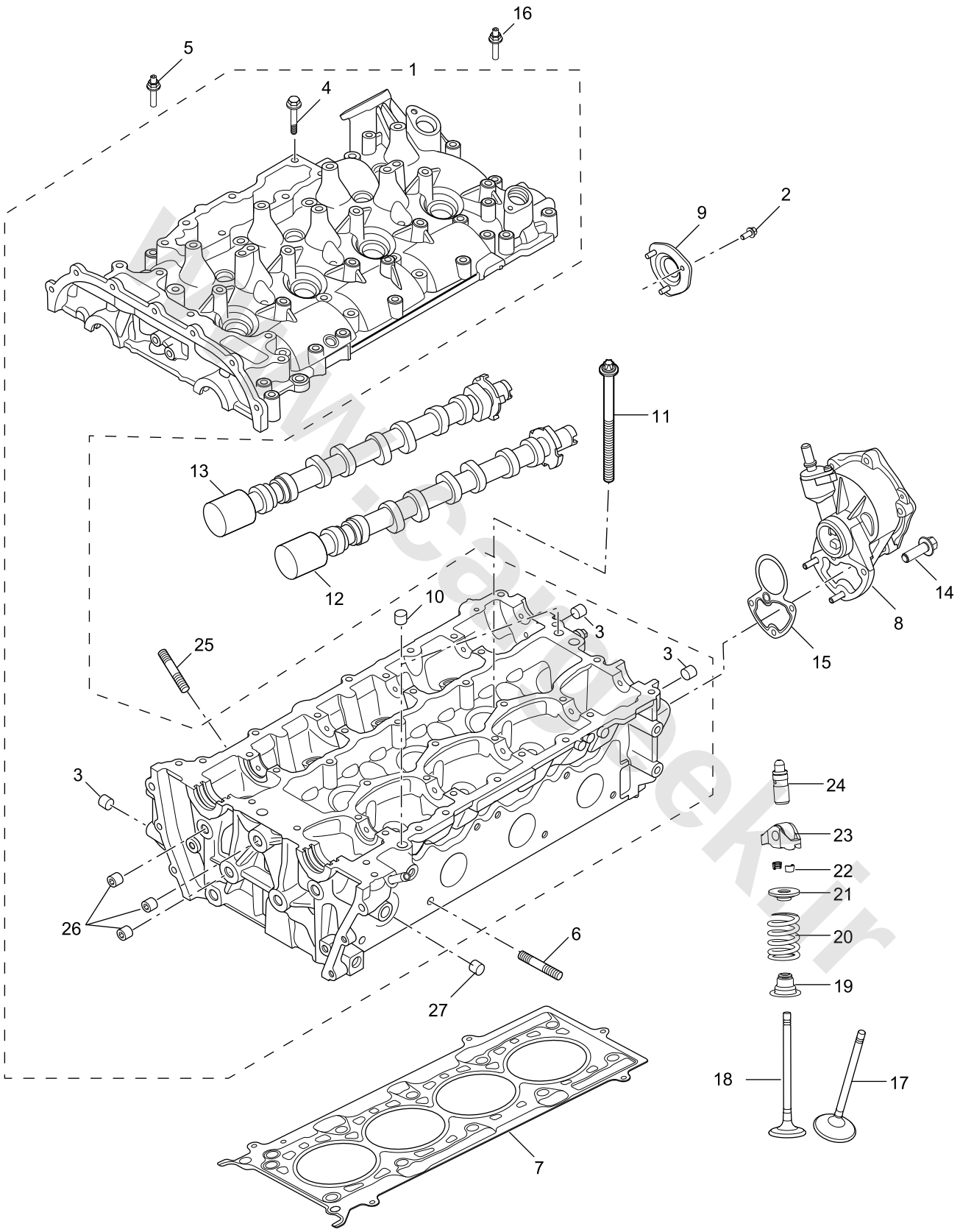

1. Engine Cylinder Head Assembly
2. Bolt - Camshaft Access Hole Cover Plate
3. Cylinder Head Oil Passage Blocked
4. Bolt - Camshaft Bracket
5. Bolt - Camshaft Bracket
6. Bolt - Exhaust Manifold

www.cargeek.ir

7. Cylinder Head Gasket
8. Engine Vacuum Pump Assembly
9. Cover Plate - Camshaft Access Hole
10. Cylinder Head Locating Pin
11. Bolt - Cylinder Head
12. Exhaust Camshaft
13. Intake Camshaft
14. Bolt - Engine Vacuum Pump
15. Gasket - Engine Vacuum Pump
16. Stud - Camshaft Bracket
17. Exhaust Valve
18. Intake Valve
19. Valve Stem Oil Seal
20. Valve Spring
21. Valve Spring Cover
22. Valve Lock Clamp
23. Engine Rocker Arm Assembly
24. Valve Tappet Assembly
25. Stud - Intake Manifold
26. Cylinder Head Oil Passage Blocked
27. Locating Pin - Power Steering Pump Bracket

www.cargeek.ir

www.cargeek.ir

Camshaft Cover Exploded View

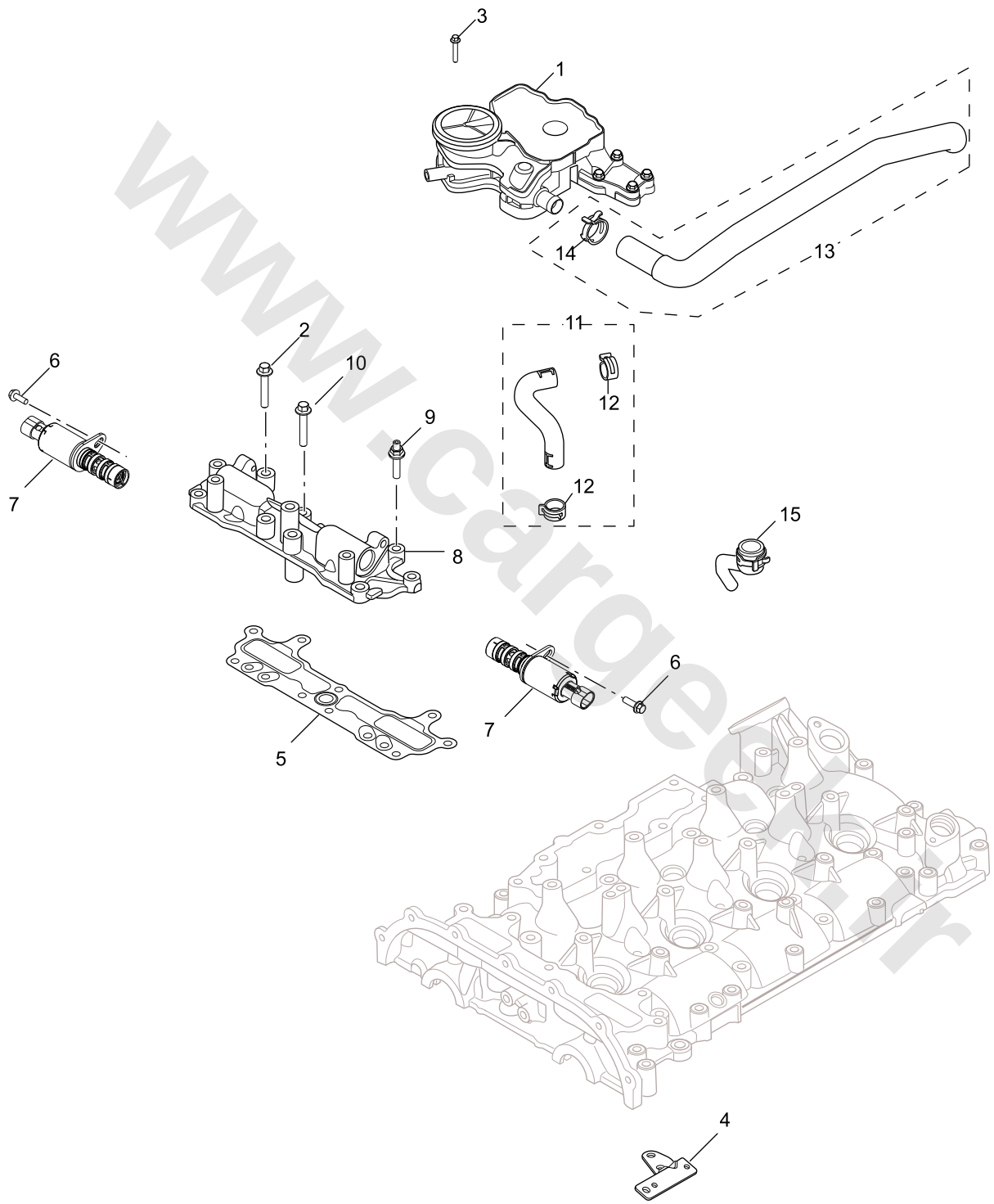

S1110103

1. Oil Separator Assembly
2. Bolt - Oil Control Valve Seat
3. Bolt - Oil Separator Cover Plate
4. Bracket - Emission Control Valve
5. Gasket - Oil Control Valve Seat
6. Bolt - Oil Control Valve

www.cargeek.ir

7. Oil Control Valve
8. Machined Part of Oil Control Valve Seat
9. Stud - Oil Control Valve Seat
10. Bolt - Oil Control Valve Seat
11. Crankshaft Part Load Breather Hose Assembly
12. Pipe Clip - Crankshaft Part Load Breather Hose
13. Crankshaft Full Load Breather Hose Assembly
14. Pipe Clip - Crankshaft Full Load Breather Hose
15. Pipe - Oil Separator to Intake Manifold

www.cargeek.ir

www.cargeek.ir

Ignition System/Fuel Injection System Exploded View

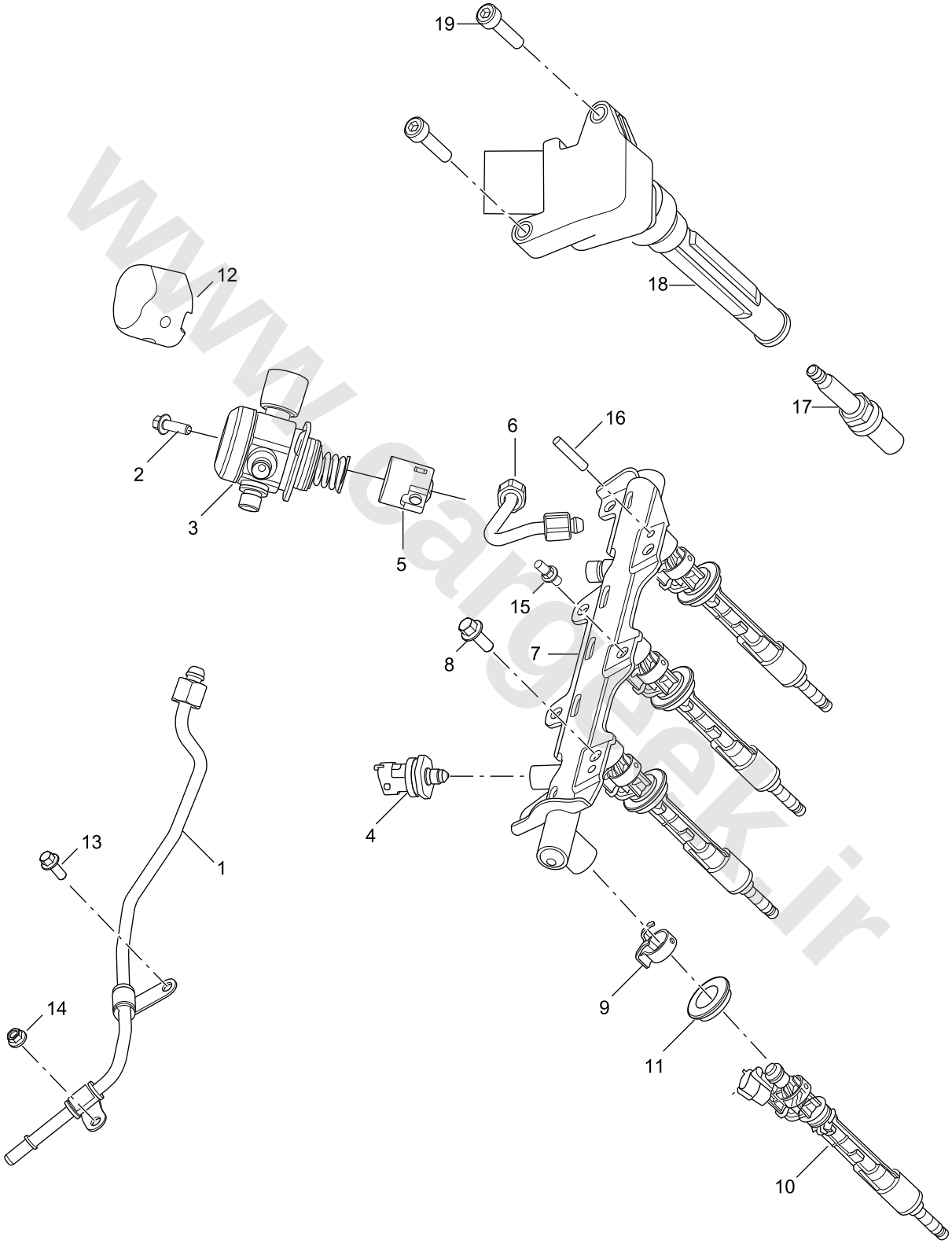

S1110104

1. Engine Low-pressure Fuel Pipe
2. Screw - Engine Fuel Pump
3. Engine High-pressure Fuel Pump
4. Sensor - Fuel Rail Fuel Pressure

www.cargeek.ir

www.cargeek.ir

5. High-pressure Fuel Pump Tappet
6. Engine High-pressure Fuel Pipe
7. Fuel Rail
8. Bolt - Fuel Rail
9. Clip - Injector
10. Injector Assembly
11. Injector Seal Ring
12. Fuel Pump Sound Insulator
13. Bolt - Engine Low-pressure Fuel Pipe
14. Nut - Engine Low-pressure Fuel Pipe
15. Bolt - Fuel Rail
16. Locating Pin - Fuel Rail
17. Spark Plug Assembly
18. Ignition Coil Assembly
19. Screw - Ignition Coil

www.cargeek.ir

www.cargeek.ir

www.cargeek.ir

Timing Chain System Exploded View

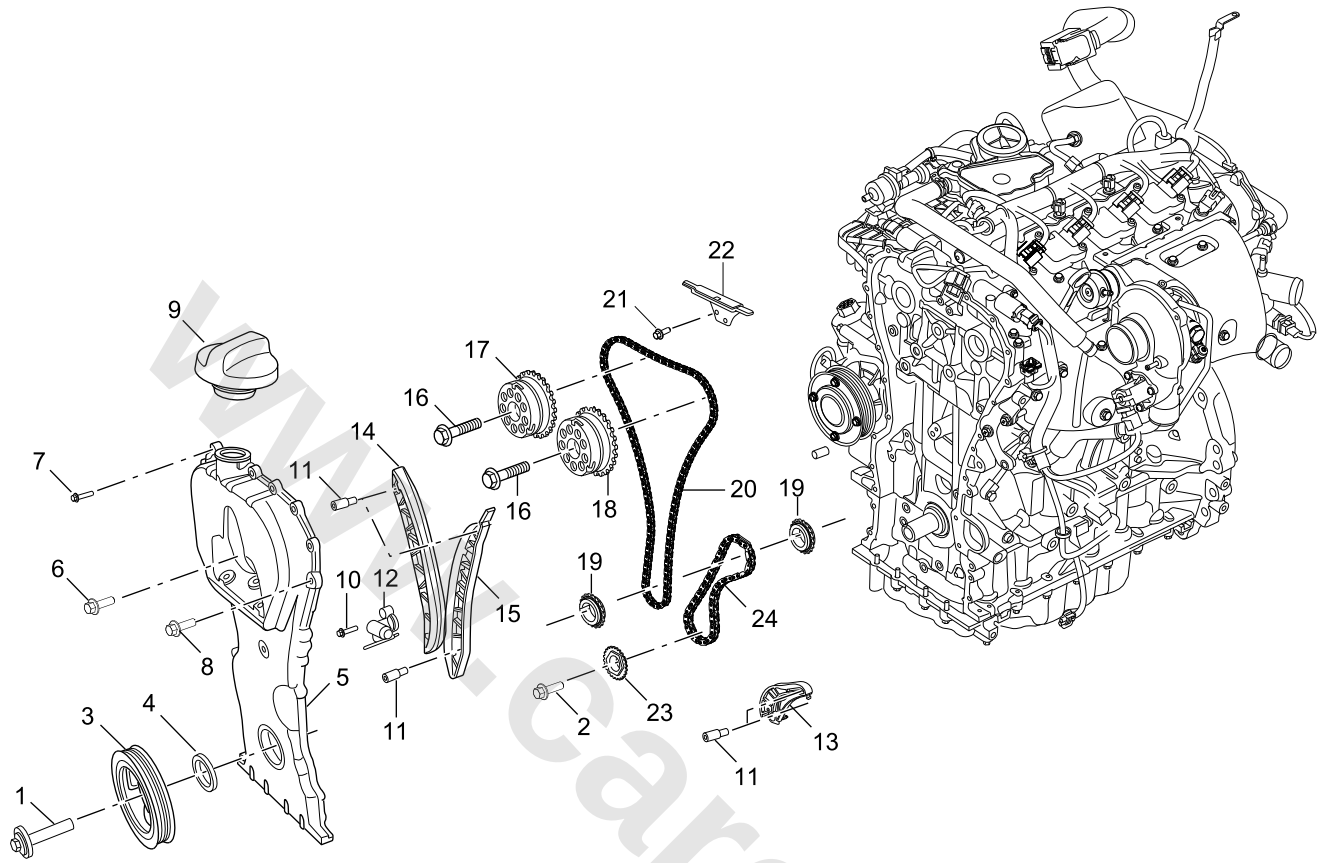

S1110105

1. Bolt -Crankshaft Torsional Vibration Damper
2. Bolt - Oil Pump Sprocket
3. Crankshaft Torsional Vibration Damper
4. Front Crankshaft Oil Seal
5. Timing Chain Cover
6. Bolt - Timing Chain Cover
7. Bolt - Timing Chain Cover
8. Bolt - Timing Chain Cover
9. Oil Filter Cap Assembly
10. Bolt - Timing Chain Tensioner
11. Locating Pin - Timing Chain Guide Rail
12. Timing Chain Tensioner Assembly
13. Oil Pump Chain Tensioner
14. Timing Chain Guide Rail
15. Timing Chain Guide Rail
16. Bolt - Phase Modulator
17. Intake Phase Modulator
18. Exhaust Phase Modulator
19. Crankshaft Sprocket
20. Timing Chain Assembly
21. Bolt - Timing Chain Guide Rail
22. Timing Chain Guide Rail
23. Sprocket - Oil Pump
24. Chain - Oil Pump

www.cargeek.ir

Oil Cooling Module/Oil Pump/Oil Pan Exploded View

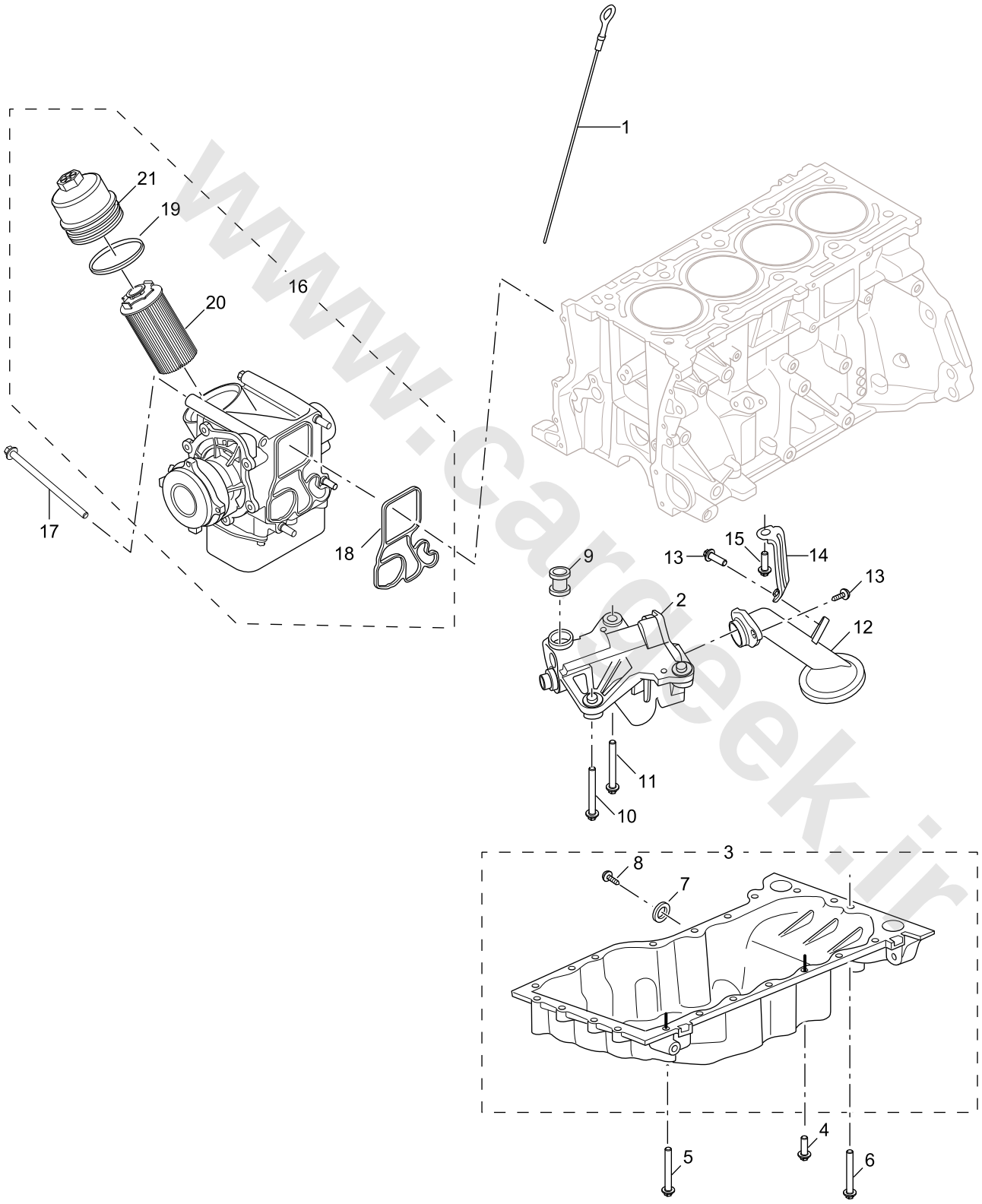

S1110106

1. Oil Level Indicator
2. Oil Pump Assembly
3. Oil Pan Assembly
4. Bolt - Oil Pan

www.cargeek.ir

www.cargeek.ir

5. Bolt - Oil Pan
6. Bolt - Oil Pan
7. Gasket - Oil Pan Drain Plug
8. Drain Plug - Oil Pan
9. Oil Pump Connector
10. Bolt - Oil Pump
11. Bolt - Oil Pump
12. Oil Pump Suction Pipe Assembly
13. Screw - Oil Pump Suction Pipe
14. Oil Pump Suction Pipe Bracket
15. Screw - Oil Pump Suction Pipe Bracket
16. Oil Filter Assembly
17. Bolt - Oil Filter
18. Seal Ring - Oil Filter Module
19. Seal Ring - Oil Filter Cover
20. Oil Filter Element
21. Oil Filter Cover Assembly

www.cargeek.ir

www.cargeek.ir

Water Pump/Thermostat Exploded View

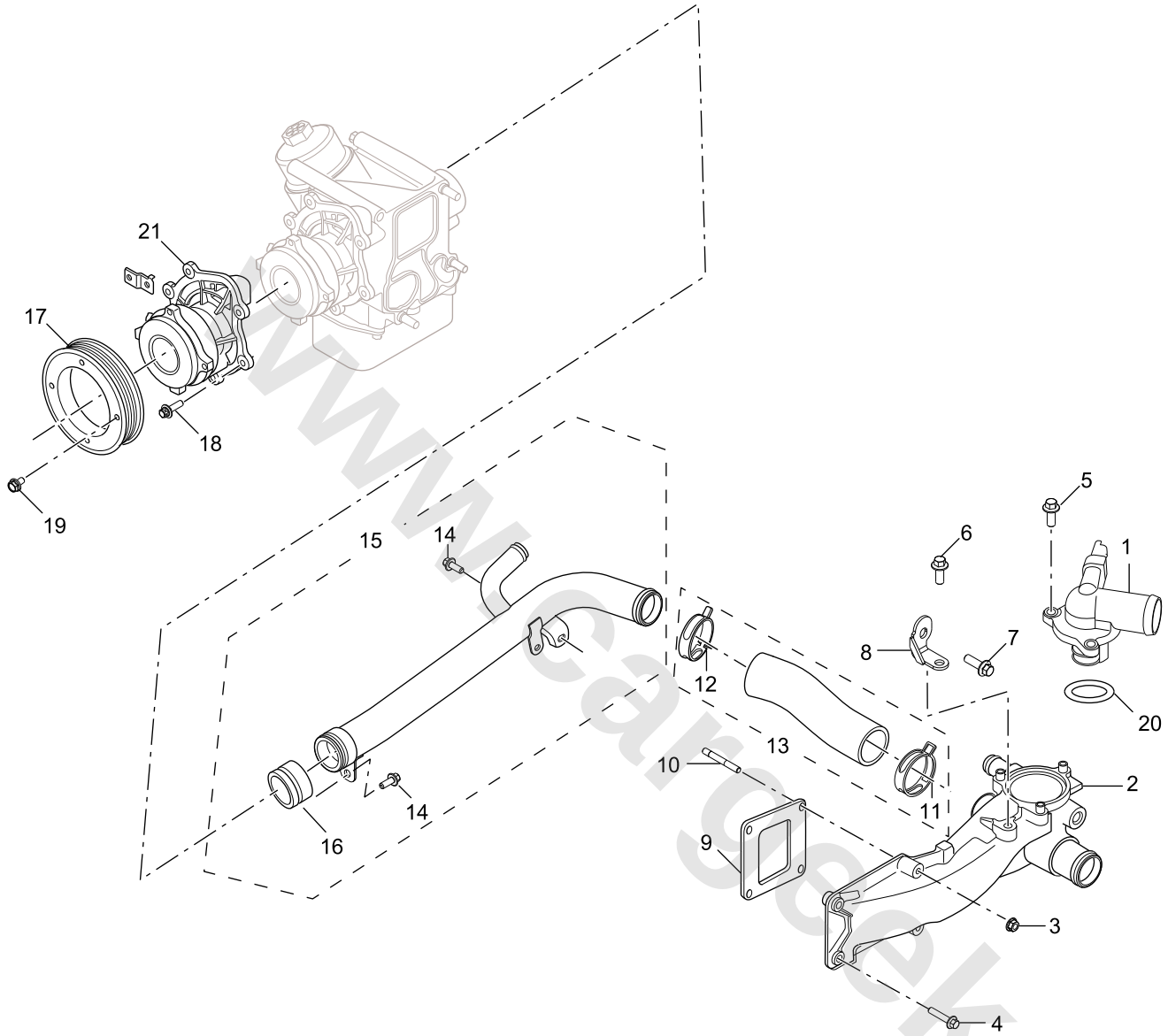

S1110107

1. Thermostat Assembly
2. Thermostat Housing Assembly
3. Nut - Thermostat Housing
4. Bolt - Thermostat Housing
5. Screw - Engine Cooling Water Pipe
6. Bolt - Thermostat Housing Bracket
7. Bolt - Thermostat Housing Bracket
8. Thermostat Housing Bracket
9. Seal Ring - Thermostat Housing
10. Bolt - Thermostat Housing
11. Clip - Engine Cooling Water Pipe
12. Clip - Engine Cooling Water Pipe
13. Water Pump Inlet Pipe Assembly
14. Screw - Engine Cooling Water Pipe
15. Water Pump Inlet Pipe Assembly
16. O Ring - Water Pump Inlet Pipe
17. Water Pump Pulley
18. Bolt - Coolant Pump
19. Screw - Water Pump Pulley
20. Thermostat Seal Ring
21. Engine Water Pump Assembly

www.cargeek.ir

Intake Manifold Exploded View

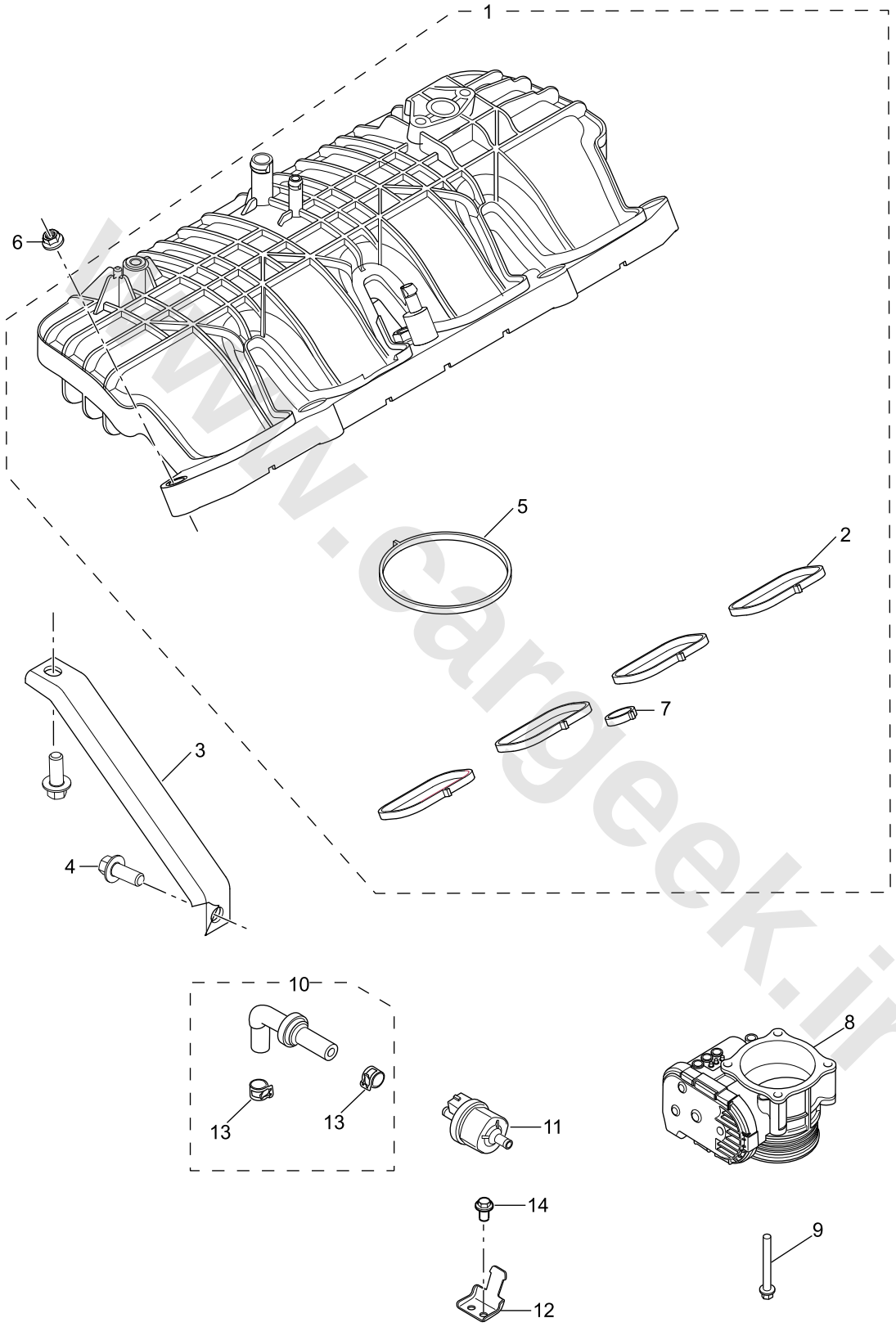

S1110108

1. Intake Manifold Assembly
2. Intake Manifold Gasket
3. Intake Manifold Bracket
4. Bolt - Intake Manifold Bracket
5. Gasket - Throttle Body
6. Nut - Intake Manifold

www.cargeek.ir

www.cargeek.ir

7. Intake Manifold Gasket
8. Throttle Body Assembly
9. Screw - Throttle Body
10. Pipe Assembly - Canister Solenoid to Manifold
11. Solenoid Solenoid Assembly
12. Canister Solenoid Bracket
13. Clamp - Canister Solenoid Pipe
14. Bolt - Canister Solenoid Bracket

www.cargeek.ir

www.cargeek.ir

www.cargeek.ir

Exhaust Manifold Exploded View

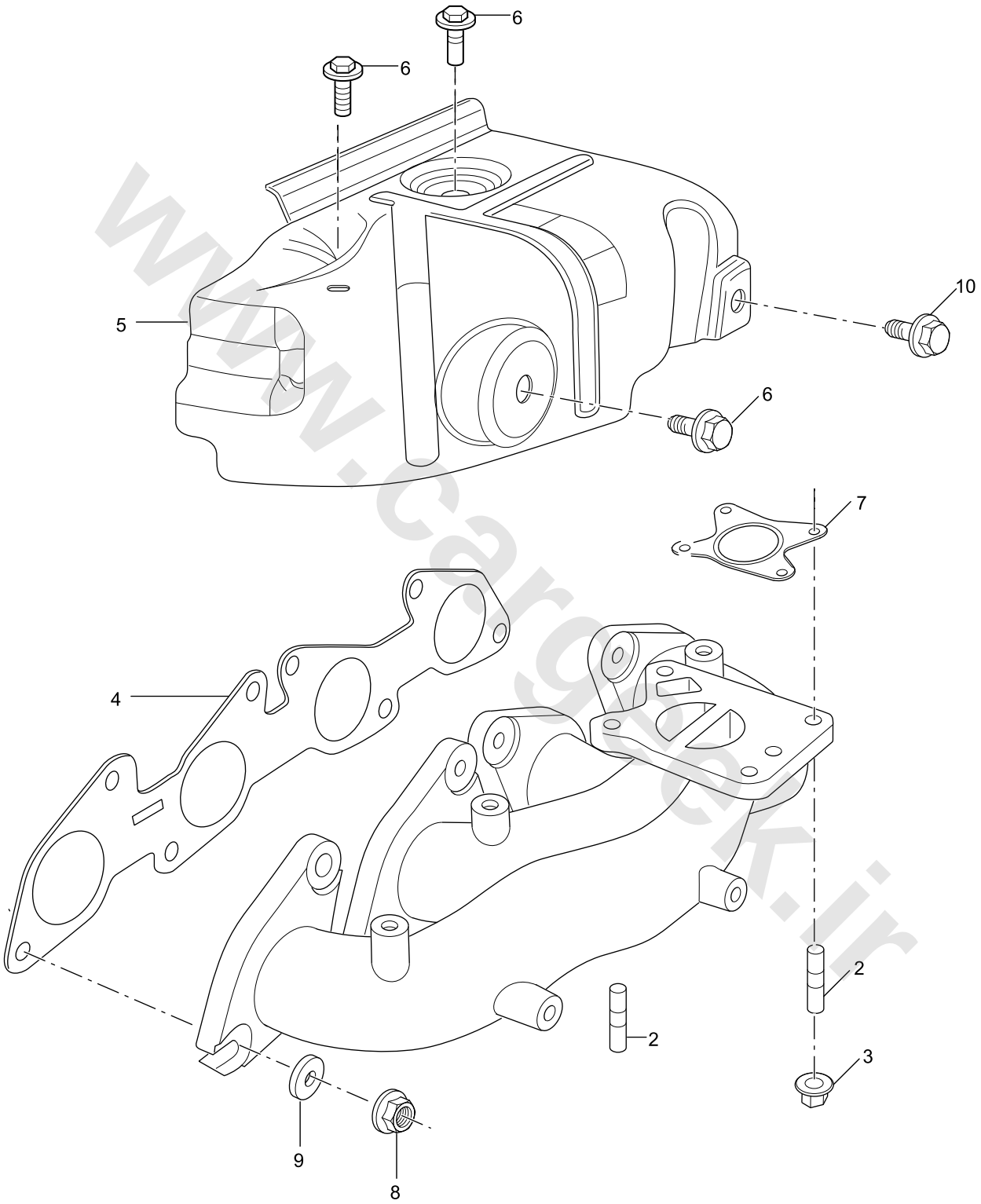

S1110109

1. Exhaust Manifold
2. Stud - Turbocharger
3. Nut - Turbocharger
4. Exhaust Manifold Gasket
5. Exhaust Manifold Heat Shield
6. Bolt - Exhaust Manifold Heat Shield

www.cargeek.ir

www.cargeek.ir

7. Gasket - Turbocharger
8. Nut - Exhaust Manifold Pipe
9. Exhaust Manifold Gasket
10. Bolt - Exhaust Manifold Heat Shield

www.cargeek.ir

www.cargeek.ir

Turbocharger Exploded View

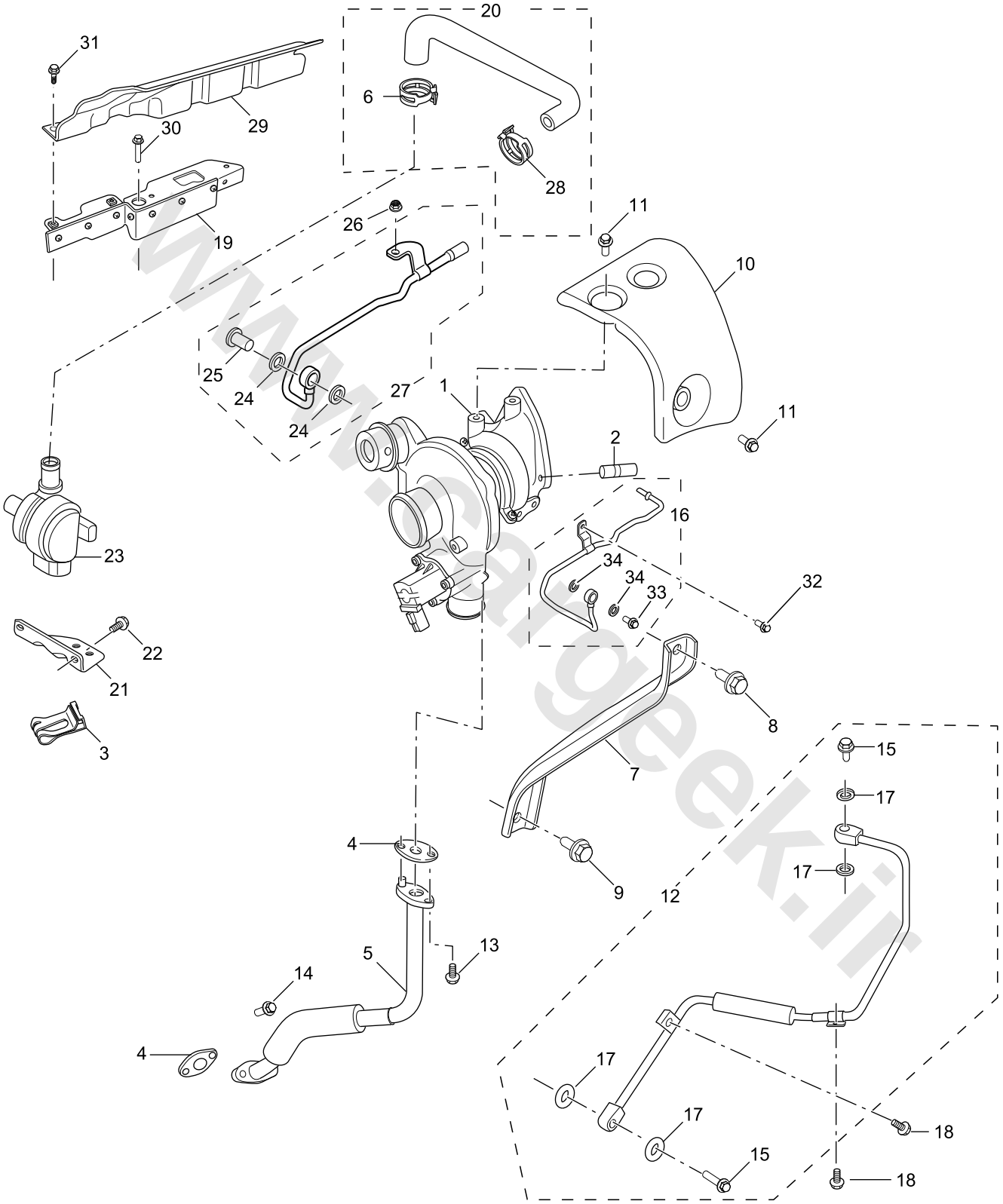

S1110110

1. Turbocharger Assembly
2. Stud - Turbocharger Exhaust Pipe
3. Clip - Electronic Water Pump
4. Gasket - Turbocharger Oil Return Pipe
5. Turbocharger Oil Return Pipe Assembly
6. Clip - Engine Cooling Water Pipe

www.cargeek.ir

7. Turbocharger Bracket
8. Bolt - Turbocharger Bracket
9. Bolt - Turbocharger Bracket
10. Heat Shield - Turbocharger
11. Bolt - Turbocharger Heat Shield
12. Turbocharger Oil Inlet Assembly
13. Bolt - Turbocharger Oil Return Pipe
14. Bolt - Turbocharger Oil Return Pipe
15. Bolt - Turbocharger Oil Inlet Pipe
16. Turbocharger Water Oil Outlet Pipe Assembly
17. Gasket - Turbocharger Oil Inlet Pipe
18. Bolt - Turbocharger Oil Inlet Pipe Bracket
19. Cylinder Head Heat Shield Bracket
20. Electronic Water Pump Outlet Pipe Assembly
21. Electronic Water Pump Bracket
22. Bolt - Electronic Water Pump Bracket
23. Electronic Water Pump
24. Gasket - Turbocharger Coolant Pipe
25. Bolt - Turbocharger Coolant Pipe
26. Nut - Turbocharger Coolant Pipe Bracket
27. Turbocharger Water Inlet Pipe Assembly
28. Clip - Engine Cooling Water Pipe
29. Cylinder Head Heat Shield
30. Bolt - Cylinder Head Heat Shield Bracket
31. Bolt - Cylinder Head Heat Shield
32. Bolt - Turbocharger Coolant Pipe Bracket
33. Bolt - Turbocharger Coolant Pipe
34. Gasket - Turbocharger Coolant Pipe

www.cargeek.ir

www.cargeek.ir

Accessory Belt Exploded View

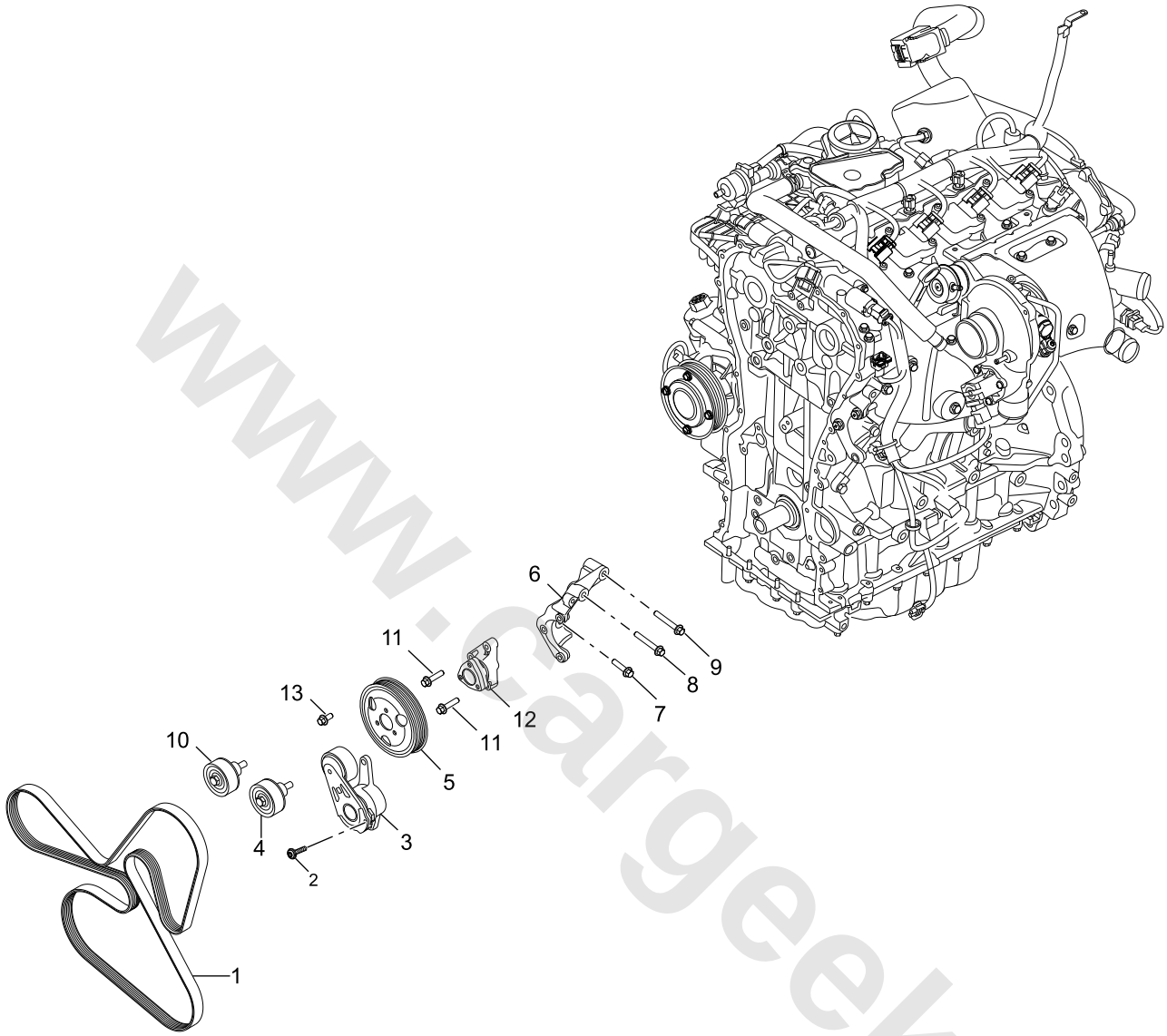

S1110111

1. Front Engine Belt
2. Screw - Tensioner
3. Auxiliary Belt Tensioner Assembly
4. Belt Idler Assembly
5. Pulley - Power Steering Pump
6. Power Steering Pump Bracket
7. Bolt - Power Steering Pump Bracket
8. Bolt - Power Steering Pump Bracket
9. Bolt - Power Steering Pump Bracket
10. Belt Idler Assembly
11. Bolt - EPAS Idler
12. EPAS Idler
13. Bolt - Power Steering Pump Pulley

www.cargeek.ir

Description

Overview

The NLE engine features inline 4-cylinder, 16-valve, DOHC, timing chain drive and direct injection system.

It is composed of cylinder block, cylinder head, crankshaft, connecting rod and camshaft, etc.The cylinder head is made of cast aluminum, and 10 high-strength bolts connect it to the cast aluminum cylinder block through multiple layers of cylinder gasket, so the whole strength is high and the structure is reliable.

Cylinder Block Components

The cylinder block is made of common cast aluminum AlSi9Cu3, this provides high overall strength, reducing the likelihood of deformation.The cylinder liner is formed by cylinder hole honing.Y-shaped water passages are processed between two adjacent cylinders to ensure radiating effect of the cylinder block.

The aluminum alloy thermal expansion piston is fitted with full floating piston pins, the clearance between the piston pin and the connecting rod small end shall be appropriate, and the two ends of the piston pin is fixed by circlips.Each piston is provided with two compression rings and one oil ring.

The forging steel connecting rod has the structure of the H-section.The big end of the connecting rod moves on the bearing shell of the crankshaft journal.The connecting rod adopts forging+cracking process.

The crankshaft has four balance weights which are supported by five bearing shells.The end float is controlled by the thrust washer on the top of the central main bearing shell.The radial clearance of the bearing shell is optional, controlled by the bearing shells of two different grades.The oil groove offered in the upper half part of the main bearing shell supply oil to the connecting rod big end bearing shell through the oil hole in the crankshaft.

Cylinder Head Components

The cylinder head adopts 4-valve structure for each cylinder, the spark plug is mounted at the center of the combustion chamber. The overhead valve structure generates powerful whirlpool in the combustion chamber and allows the gas mixture to be distributed evenly, which facilitates spread of flame and improvement of the combustion condition, engine power performance, fuel economy and emission performance.

One end of the camshaft drive roller rocker arm is supported by the hydraulic tappet, and the other end is by the valve stem. The valve is driven by the moment of the rocker arm.The hydraulic tappet can compensate the valve clearance automatically.The valve stem oil seal is press-fitted on the cylinder head oil seal seat and can be used as the valve spring seat to support the valve spring.

The exhaust valve can remove the carbon deposit, and the valve stem with a machined side can remove the carbon deposit at the end of the valve guide and in the combustion chamber and thus avoid valve seizing.

The metal cylinder gasket is of a multi-layer structure, the cylinder opening adopts a pressing ring structure, which enhances sealing at cylinder opening; local rubber coat technology is adopted to ensure the sealing performance.

Four oil orifices are arranged on both the front and rear of the camshaft head journal, which correspond to two oil circuits respectively.The oil circuits are two-way circuits. When the front takes oil, the rear drains and vice versa.Oil enters the oil control solenoid valve via the oil ducts.The tail end of the camshaft is equipped with a camshaft signal wheel to provide signals for camshaft position sensor.There is a tail groove on the camshaft for controlling camshaft timing phase during assembly.

A phase modulator is fitted at the drive ends of the intake and exhaust camshafts, which is fixed by bolts.The phase modulator includes two hydraulic pressure chambers.The ECU controls the duty cycle signal of the OCV valve according to the engine working condition, and the OCV valve adjusts the camshaft phase and achieves an optimum distribution by controlling the hydraulic pressure level in the two chambers.

Two oil control valves are fitted on the housing of the camshaft cover control valve, which are fixed by an O ring and a bolt respectively.The control valve is a four-way proportioning valve, which consists of an oil inlet, an oil return port and two oil circuits connected with the phase modulator chamber.

Lower Crankcase Components

The lower crankcase assembly includes the lower crankcase and oil pump. The aluminum lower crankcase is designed into a shape that is suitable for accumulating oil around the oil strainer, the oil pump is fitted to the bottom of the crankcase. Oil passes through the oil strainer with screen, and it is then pressurized by the oil pump before returning to the oil strainer.

Clean oil is distributed to the main bearing and cylinder head via main oil passage of the engine body to lubricate the crankshaft, connecting rod and camshaft, etc.The mating face of the lower crankcase and engine body are sealed by sealant and secured with bolts.

Engine Accessories

The accessories are a single 6-ribbed belt drive system driven by crankshaft pulley: the system drives the water pump, alternator and A/C compressor, and tensions the belt via a damping tensioner.

www.cargeek.ir

Positive Crankcase Ventilation

The ventilation system redirects the exhaust gas escaped to the crankcase back into the intake system with the help of intake system vacuum level, then sends it to the cylinder for combustion, so as to reduce the air pollution.

Oil and gas in the crankcase are separated via an oil separator in the camshaft cover, and oil flows back to the crankcase.

High Pressure Common Rail & Direct Injection Gasoline System

Comparing with PFI engine, the gasoline direct injection engine avoids introducing moisture to the wall of the intake port, this allows accurate calculation of the fuel, reduction of the HC emission level during cold start and improvement of the engine transient response speed.

The gasoline in-cylinder direct injection (GDI) system includes: High-pressure oil pump, high-pressure oil pipe, fuel rail, rail pressure sensor and injector.

The overhead cam drives the high-pressure oil pump to deliver high-pressure fuel to the fuel rail pump via the oil pipe, the injector injects the fuel into the cylinder at a certain pulse width, the rail pressure sensor provides rail pressure signal feedback for the ECU, and the ECU controls the rail pressure by the high-pressure oil pump.The pressure of the NLE fuel injection system is up to 15MPa. ECU controls the spray form and fuel-injection quantity by controlling the rail pressure and fuel injection pulse width so as to meet the requirements for injection under different conditions.

Turbocharger

The high temperature and high pressure gas exhausted from the engine exhaust manifold contains a certain energy.For naturally aspirated engines, this energy is often wasted during emissions.The turbocharger can use the exhaust gas as power to improve the engine power (around 30%) and cylinder scavenging performance, this can effectively reduce NOx emission.The turbine wheel and compressor impeller realize rigid connection through the turbocharger shaft, and this is called the turbocharger rotor.The turbocharger rotor is fixed in the turbocharger through the floating bearing (A smaller friction resistance moment can be guaranteed when the rotor rotates at high speed.).When the engine works, the exhaust gas impacts the turbine wheel at a certain angle with a high speed, which drives the turbocharger rotor to rotate at high speed.The high-speed rotation of the compressor impeller raises the pressure in the engine intake manifold, and pressurization is thus achieved during this process.By this way, high pressure will allow more air with larger density to enter into the cylinder during intake process. This helps to improve fuel combustion and engine performance.

Water cooling and oil cooing are used due to high temperature of the gasoline engine turbocharger.

www.cargeek.ir

www.cargeek.ir

Operation

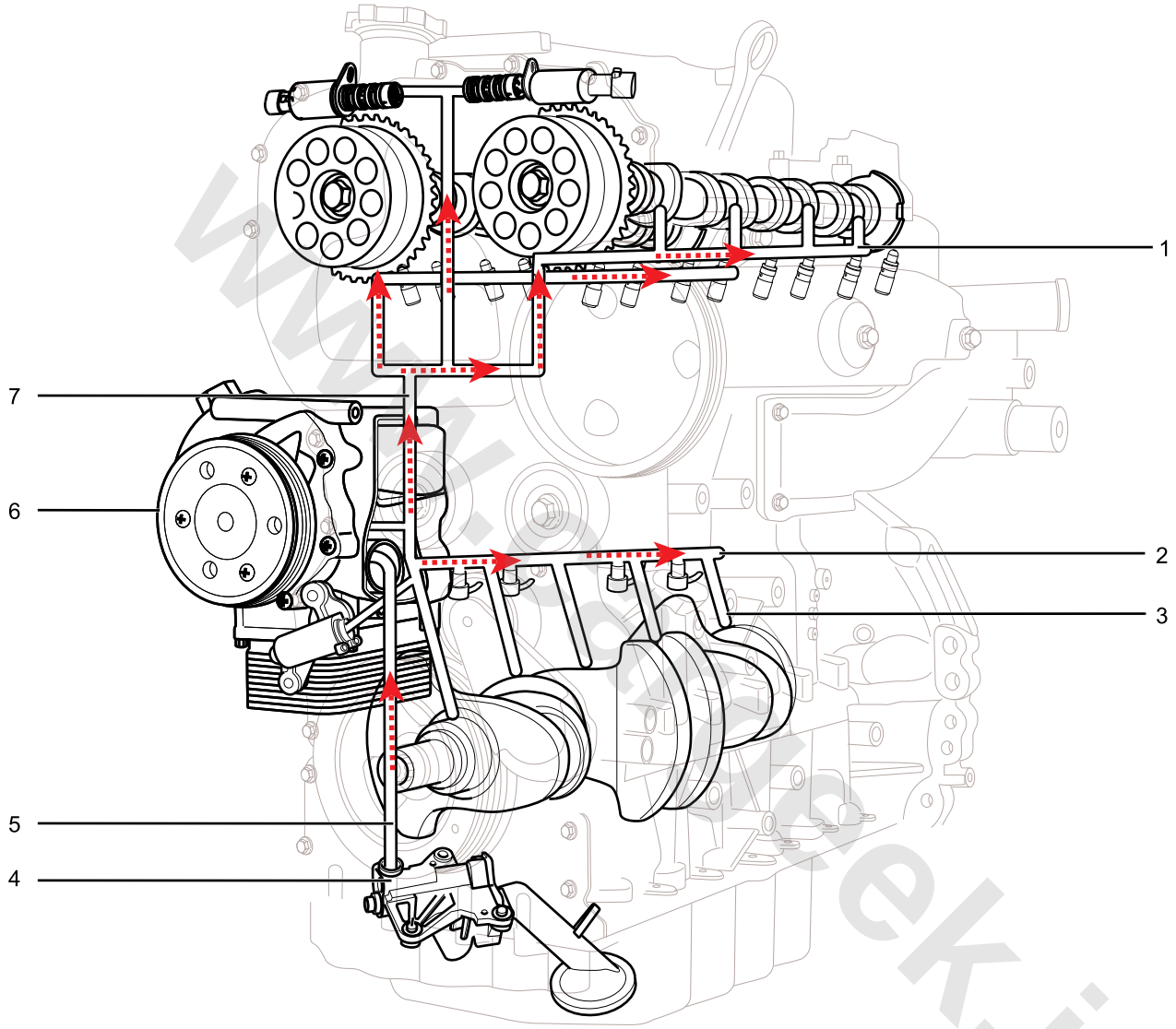

S1112001

1. Cylinder Head Oil Passage
2. Cylinder Block Main Oil Circuit
3. Crankshaft Cross Oil Circuit
4. Oil Pump
5. Main Oil Circuit
6. Oil Filter
7. Main Oil Circuit

Lubricant Oil Circuit

The lubrication system is a full-flow filtration, forced oil supply system. Oil is drawn from the oil pan through the oil suction pipe by the oil pump, and the oil suction pipe is provided with a strainer which can prevent impurities from entering the oil pump.

The crankshaft uses a chain to drive the oil pump with a pressure limiting valve. When the oil pressure achieves a certain value, the pressure limiting valve opens, the excess oil returns to the inlet side of the oil pump, and this helps maintain the oil pressure within a certain working pressure range and ensure normal operation of the engine. The oil from the oil pump outlet flows into the oil filter module through the skirt rack and engine body oil circuit.

The oil filter module is directly fitted on the engine body, which contains the oil cooler and oil filter. The oil cooler cools the oil before delivering it into the oil filter, this oil filter is an environment-friendly filter, so you just need to replace the

www.cargeek.ir

filter element when doing maintenance. The oil filter is fitted with a bypass valve, when the filter element is blocked, it will open and ensure free flow of the oil, but the element shall be replace under this situation.

The oil then enters into the main oil circuit fitted with the piston cooling nozzle which is used for cooling the piston and lubricating the connecting rod small end and piston pin. The oil lubricates the main bearing shell through the cross oil circuit, and the cross oil circuit of the crankshaft delivers the oil from the main bearing shell to the connecting rod big end bearing shell.

The cylinder head includes 3 side oil circuits connected with the engine body main oil circuit, one of them provides pressure for the VCT, and oil flows into the two horizontal oil circuits of standard length via the other two side circuits, the oil source of each hydraulic tappet and camshaft journal is thus provided.

The turbocharger lubricant pipe and main engine oil circuit of the turbocharged engine are connected. Oil comes into the turbocharger before flowing back into the engine body cavity by the oil return pipe.

www.cargeek.ir

www.cargeek.ir

Service Procedures

Mechanical Vacuum Pump

Remove

1. Remove the battery box.

☞ **Battery Remove**

2. Remove the engine cover.
3. Disconnect the vacuum pipe from the vacuum pump.

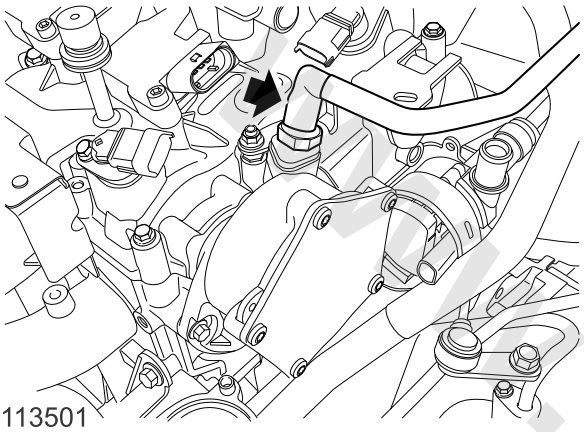

S1113501

4. Remove 3 bolts fitting the vacuum pump to the cylinder head to release the vacuum pump, and discard the gasket.

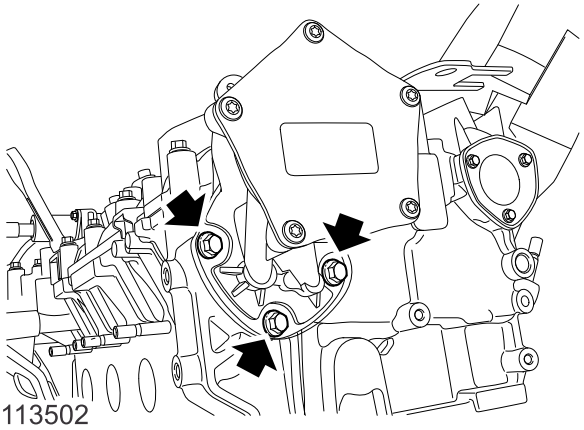

S1113502

Refit

1. Fit new gaskets.
2. Pass the 3 bolts through the mechanical vacuum pump to fix the gasket to the mechanical vacuum pump.
3. Adjust the connecting parts of the mechanical vacuum pump to level position, insert them into the camshaft groove, fit 3 bolts, tighten to **13-15Nm** and check the torque.
4. Connect the vacuum pipe of the mechanical vacuum pump.
5. Fit the engine cover.
6. Fit the battery.

☞ **Battery Refit**

Oil Control Valve

Remove

1. Disconnect the battery negative.
2. Remove the engine cover.
3. Disconnect the oil control valve connector.

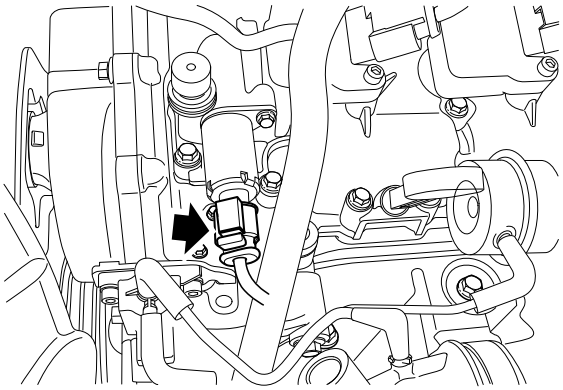

S1113503

4. Release 2 bolts fixing the 2 oil control valves to the CVVT cover and remove the oil control valves.

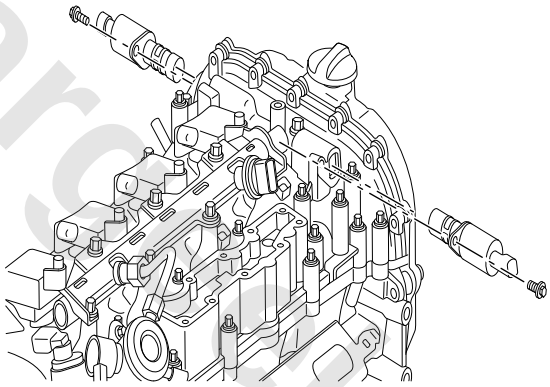

S1113504

Refit

1. Fix 2 oil control valves to the CVVT cover, fit 2 bolts, tighten to **5–7Nm** and check the torque.
2. Connect the oil control valve connector.
3. Fit the engine cover.
4. Connect the battery negative.

www.cargeek.ir

CVVT Cover

Remove

1. Disconnect the battery negative.
2. Remove the engine cover.
3. Remove the oil control valve.

Oil Control Valve Remove

4. Remove 9 bolts fixing the CVVT cover to the camshaft cover, and remove the CVVT cover and gasket.

Caution: *Mounting Position of Stud*

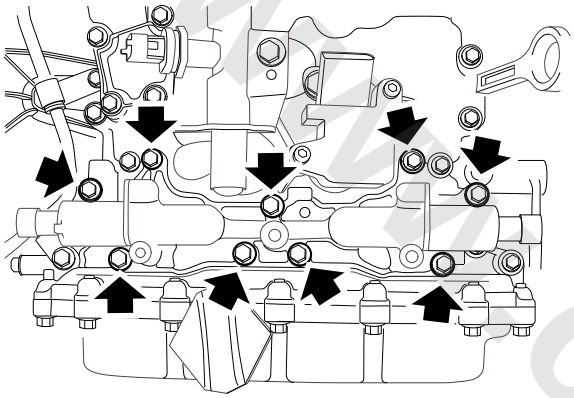

S1113505

Refit

1. Clean the junction between the CVVT cover and the camshaft cover.
2. Fit the gasket and ensure it is aligned with all holes.
3. Fix the CVVT cover to the camshaft cover, fit 9 bolts, tighten to **9-11Nm**, and check the torque.

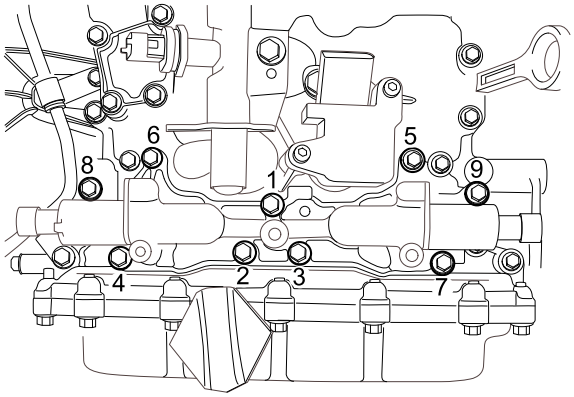

S1113630

4. Fit the oil control valve.

Oil Control Valve Refit

5. Fit the engine cover.
6. Connect the battery negative.

Thermostat Housing

Remove

1. Disconnect the battery negative.
2. Remove the battery bracket.

Battery Bracket Remove

3. Drain the engine coolant.

Coolant - Drain

4. Remove the thermostat.

Thermostat Remove

5. Remove the engine coolant temperature sensor.

Engine Coolant Temperature Sensor Remove

6. Remove 1 bolt (1) fixing the throttle air inlet pipe to the bracket, and take away the throttle air inlet pipe.
7. Release the clamp and disconnect the cooling pipe of the thermostat housing.

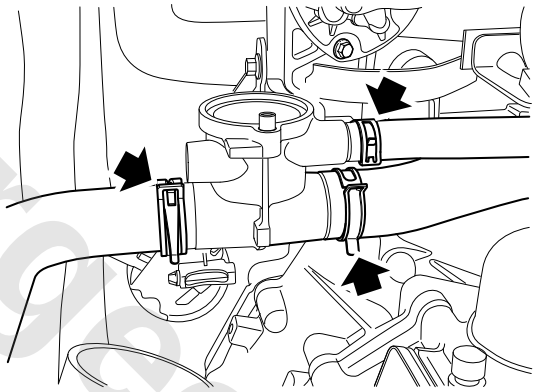

S1113506

8. Remove 2 bolts fixing the turbocharger bracket to the cylinder block and turbocharger, and remove the bracket.

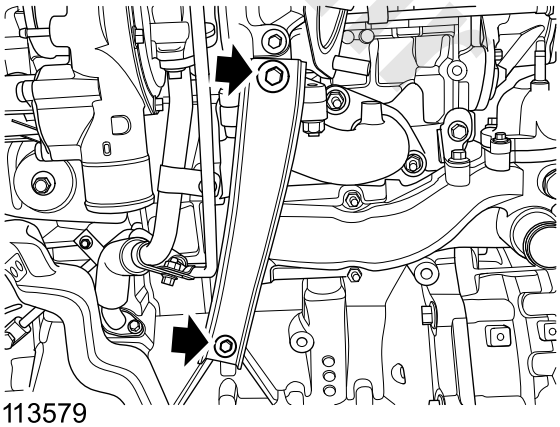

S1113579

9. Remove 2 bolts fixing the thermostat housing bracket to cylinder head and thermostat housing.
10. Remove 2 bolts and 2 nuts fixing the thermostat housing to the engine cylinder block, remove the thermostat housing and discard gasket.

www.cargeek.ir

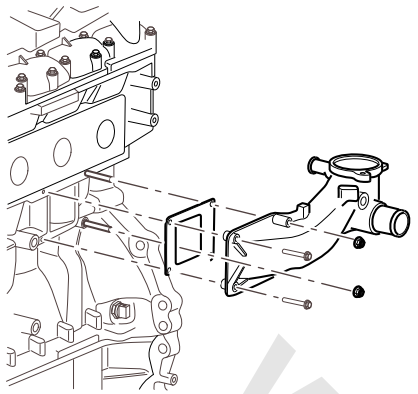

S1113507

11. Remove and discard 2 studs.

Refit

1. Fit 2 new studs to the cylinder block, tighten to **3-5Nm** and check the torque.
2. Fit new gaskets, fix the thermostat housing to engine cylinder block, fit 2 bolts and 2 nuts and pre-tighten them, then tighten to **9-11Nm** in the diagonal sequence and check the torque.
3. Fix the thermostat housing bracket to the cylinder head and thermostat housing, fit 2 bolts, tighten to **22-28Nm** and check the torque.
4. Connect the cooling pipe of the thermostat housing and secure it with clamps.
5. Fix the turbocharger bracket to the cylinder block and turbocharger, fit 1 turbocharger bolt, tighten to **40–45Nm**, then fit 1 cylinder block bolt, tighten to **50–60Nm** and check the torque.
6. Fix the throttle air inlet pipe to the bracket, fit 1 bolt, tighten to **9–11Nm**, and check the torque.
7. Fit the engine coolant temperature sensor.

Engine Coolant Temperature Sensor Refit

8. Fit the thermostat.

Thermostat Refit

9. Refill the engine coolant.

Coolant - Refill

10. Fit the battery bracket.

Battery Bracket Refit

11. Connect the battery negative.

Intake/Exhaust Phase Modulator

Remove

1. Drain the engine oil.

Engine Oil Drain

2. Remove the engine timing chain.

Engine Timing Chain Remove

3. Release the bolt of the intake/exhaust phase modulator.
4. Remove and discard 1 bolt fixing the intake/exhaust phase modulator to the intake/exhaust camshaft respectively, identify the intake/exhaust phase modulator and remove the phase modulator.

Refit

1. Fit the intake phase modulator to the front of the intake camshaft, fit new bolt to the phase modulator and pre-tighten it.

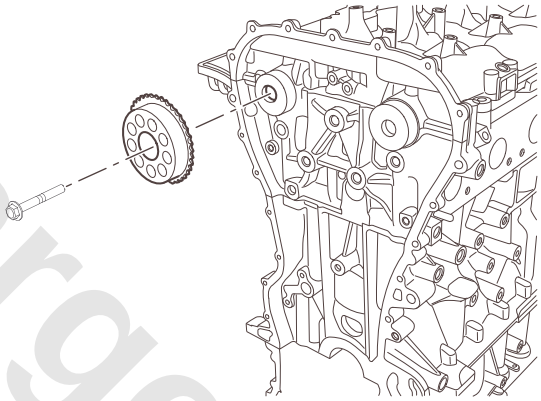

S1113509

2. Fit the exhaust phase modulator to the front of the exhaust camshaft, fit new bolt to the phase modulator and pre-tighten it.

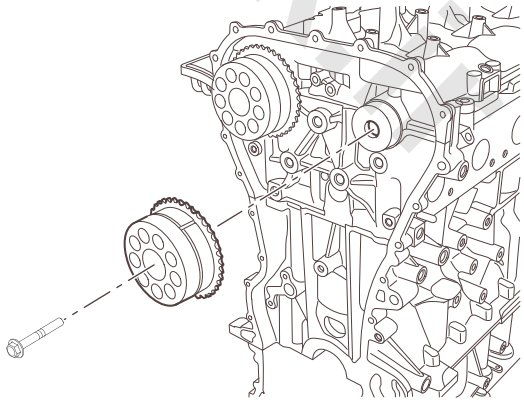

S1113510

3. Tighten the phase modulator bolt, tighten to **40Nm+120°** (monitor if final torque is 140-200Nm) and check the torque.
4. Fit the engine timing chain.

Engine Timing Chain Refit

5. Refill engine oil.

www.cargeek.ir

Engine Oil Refill

Oil-gas Separator

Remove

1. Disconnect the battery negative.
2. Remove the engine cover.
3. Release the clamp, and disconnect the breather pipe from the oil-gas separator.

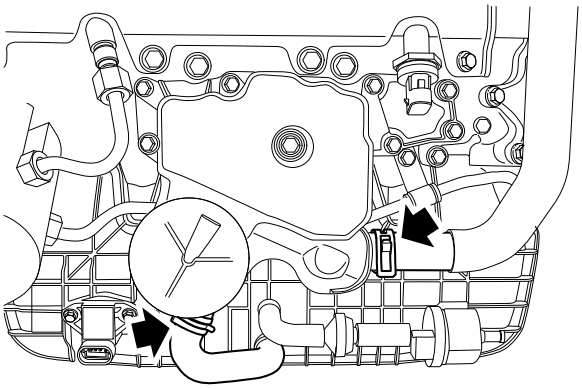

S1113511

4. Remove 8 bolts fixing the oil-gas separator to the camshaft cover to release the oil-gas separator.

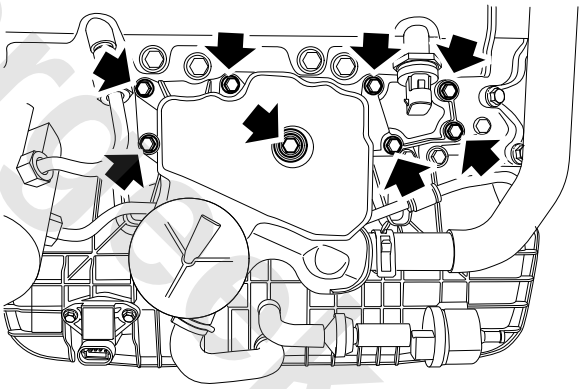

S1113512

5. Release the clamp, and remove the oil return pipe from the oil-gas separator.

Refit

1. Clean the junction of the oil-gas separator.
2. Fit the oil return pipe to the intake manifold.
3. Adjust the angle of the oil return pipe, fit the big end of the oil return pipe to the oil-gas separator and secure with clamps.
4. Fix the oil-gas separator to the camshaft cover, fit 8 bolts, tighten to **9–11Nm**, and check the torque.

www.cargeek.ir

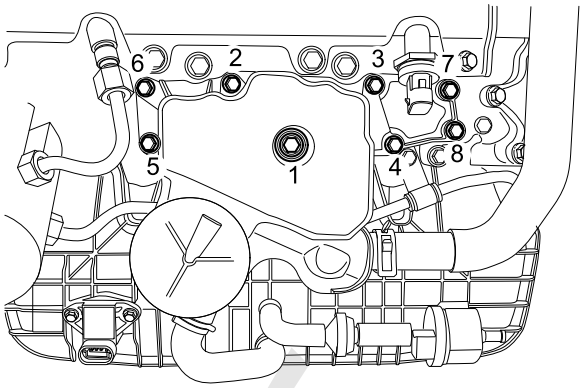

S1113631

5. Connect the vacuum pipe of the oil-gas separator and secure with clamps.
6. Fit the engine cover.
7. Connect the battery negative.

Cylinder Head Check

Remove

1. Remove the cylinder head.

Cylinder Head Remove

2. Remove 5 nuts fixing the intake manifold to the cylinder head, remove the intake manifold and discard the gasket.

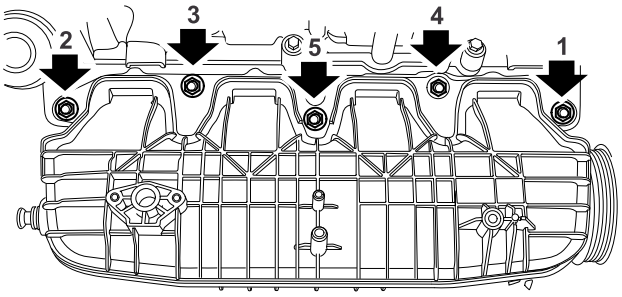

S1113513

3. Remove 4 bolts fixing the exhaust manifold heat shield to the exhaust manifold to release the heat shield.

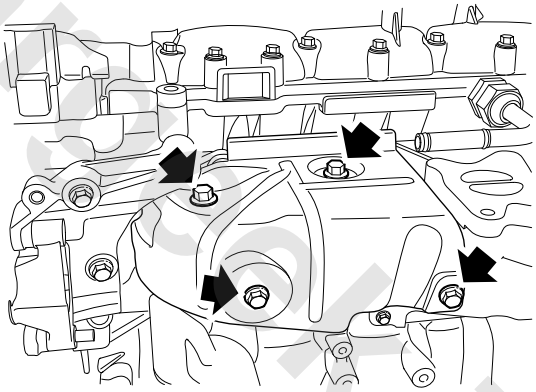

S1113514

4. Remove and discard 8 nuts fixing the exhaust manifold to the engine, remove the exhaust manifold and discard the gasket.

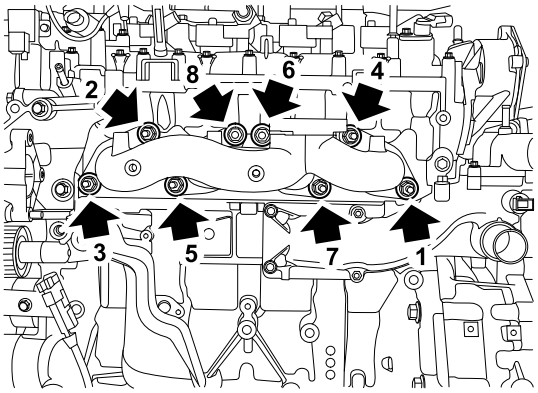

S1113515

5. Clear the dirt in the spark plug gap, and remove the

www.cargeek.ir

spark plug from the cylinder head.

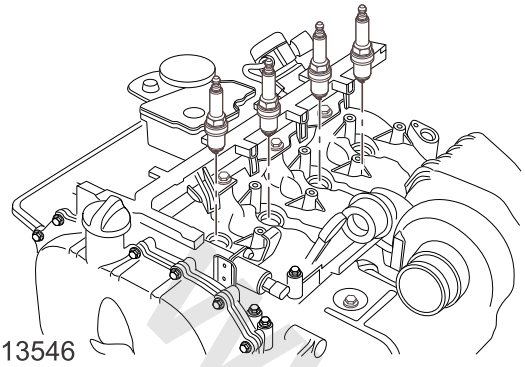

S1113546

6. Put the camshaft into the camshaft bearing seat of the cylinder head.
7. Apply engine oil to the camshaft journal evenly.

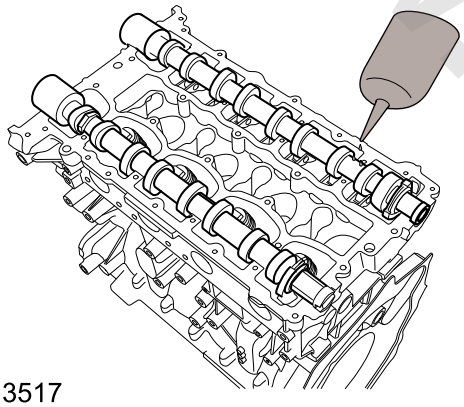

S1113517

8. Fix the camshaft cover to the cylinder head, fit 39 bolts, tighten to **9–11Nm** in the sequence shown, and check the torque.

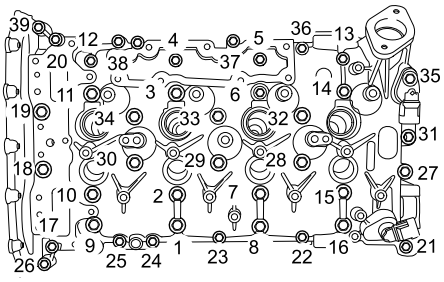

S1113518

9. Place the camshaft in the mounting position on the cylinder head, fit a micrometer on the front end of the camshaft along the thrust direction. When the camshaft is moving forward or backward (in the axial direction), measure the end clearance. The measurement shall be within 0.07-0.22mm, if it is not within the specified range, replace the cylinder head or camshaft.

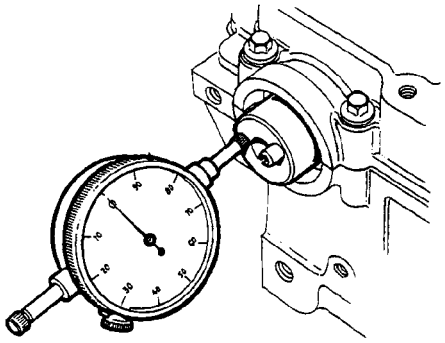

S103293

10. Remove 39 bolts fixing the camshaft cover to the cylinder head in the sequence shown, and remove the camshaft cover.

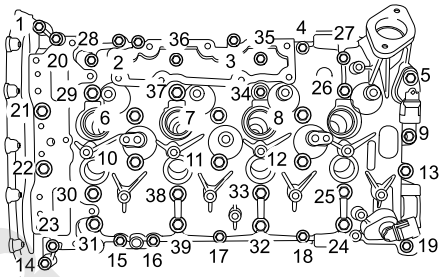

S1113519

11. Identify the position of each camshaft carefully, and remove the camshaft from the camshaft seat.
12. With a viscous magnet, remove 16 roller rocker arms and hydraulic tappet from the cylinder head, and keep them in the mounting sequence.

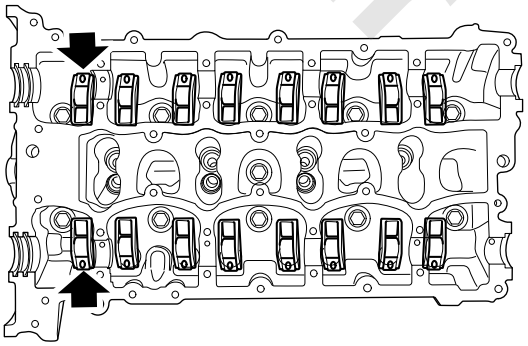

S1113521

13. Measure the outside diameter of each tappet, and the OD shall be Φ11.994±0.006mm, if it is out of the range, replace it.
14. Ensure that the oil holes in each tappet are clean.

www.cargeek.ir

15. Clean the surfaces of the camshafts and cylinder head bearing.
16. Inspect the camshaft and replace if it is scratched, pitted or excessively worn.
17. Fix the camshafts to the cylinder head, and place a plastic gauge on each journal.
18. Then fit the camshaft cover and 39 bolts, tighten to **9–11Nm** in the sequence shown, but do not rotate the camshaft.

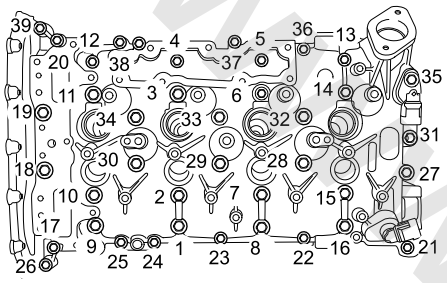

S1113518

19. Remove 39 bolts fixing the camshaft cover to the cylinder head in the sequence shown, and remove the camshaft cover.

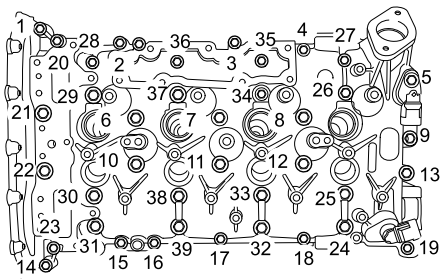

S1113519

20. Measure the widest part of the plastic gauge on each journal and determine the clearance between the journal of 1st gear/2-6 gear and the cylinder head.

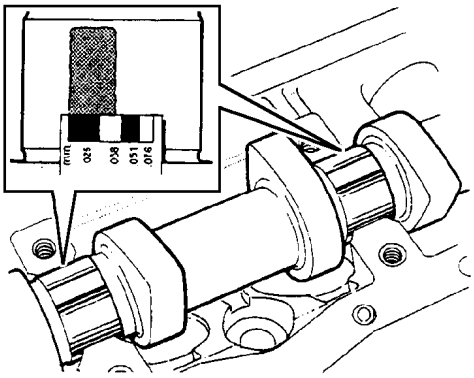

S103298

21. Compare the measured clearance with the standard value. If the measured clearance exceeds the standard value, and the camshaft journal is within the standard value, renew the cylinder head and camshaft cover assembly.

Parameters

22. Remove the valve.

Valve Remove

23. Clean the mating face of the cylinder head.
24. Check the cylinder head for damage.Pay special attention to the gasket surface of the cylinder head.
25. Check the surface of the cylinder head for scratch, and check the flatness of the cylinder head according to the method shown, do the operation in a cross way. If the flatness is not the specified value (0.08mm), replace the cylinder head.

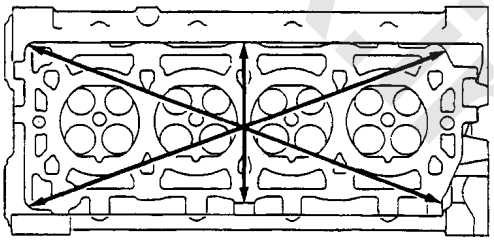

S103303

26. Check the height of the cylinder head, if it is out of the specified range (137±0.05mm), replace the cylinder head.
27. Remove the carbon deposit and loose particle from the valve guide, valve, valve seat and combustion surface.
28. Measure the clearance between the valve stem (1) and valve guide (2).

www.cargeek.ir

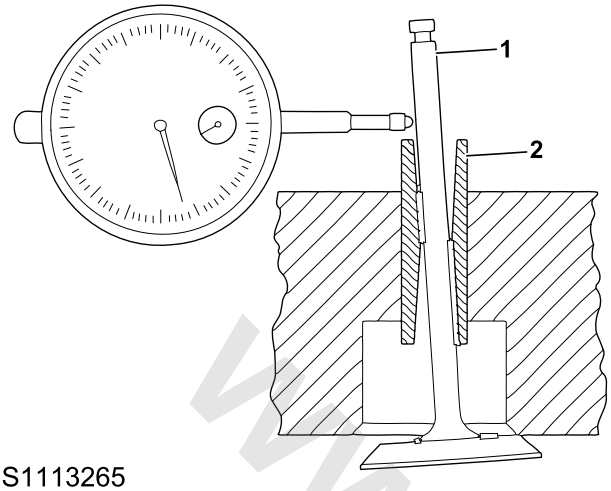

S1113265

Standard Value	
Intake Valve	0.0175–0.0445mm
Exhaust Valve	0.0375–0.0645mm

29. Apply Prussian blue (or lead white) to the contact surface of the valve seat and check the valve contact surface condition. Check if the continuous contact is achieved throughout the circle. If continuous contact is not achieved, replace the valve. If the contact surface is still abnormal in the following check, replace the entire cylinder head.

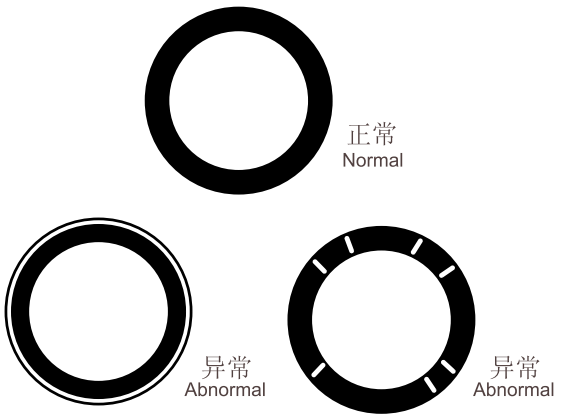

30. Insert the valve into the valve guide of the cylinder head, and check the fitting height A of the valve stem.

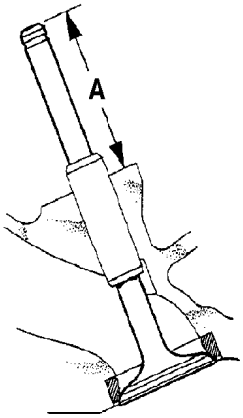

S103306

Standard Value	
Intake Valve	49.9-50.4mm
Exhaust Valve	50.09-50.59mm

Refit

1. Clean the seal area of the cylinder head and camshaft support. Treat the sealing surface with foam remover and plastic scraper, but never use any metal scraper. Clean the mating surface of the intake/exhaust manifolds.
2. Blow the oil passage and coolant passage dry. Ensure clean oil can be supplied to the camshaft cover.

Tip: Please use SAIC MOTOR recommended solvent.

3. Fit the valves.

Valve Refit

4. Clean the mating surface of the exhaust manifold and cylinder head.
5. Fit new gasket to the exhaust manifold, secure the exhaust manifold on the engine, fit 8 gaskets and new nut with high temperature antiwelding agent, then tighten to **23–27Nm** in the sequence shown and check the torque.

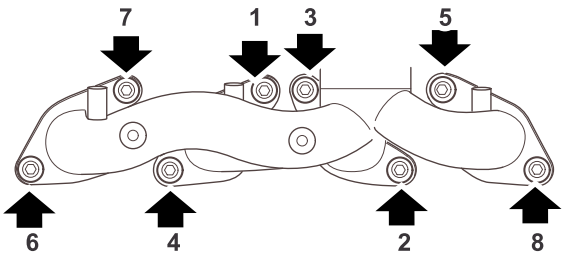

S1113522

6. Fix the exhaust manifold heat shield to the exhaust manifold, fit 4 bolts, tighten to **22–28Nm** and check

www.cargeek.ir

www.cargeek.ir

the torque.

7. Fit the hydraulic tappet into the corresponding mounting bore on the cylinder head, and lubricate it with clean engine oil.
8. Ensure the roller rocker arm holder is secure, align the ball groove of the roller rocker arm with the plunger ball head of the hydraulic tappet, and gently press the ball head into the ball groove.
9. Fit the new intake manifold gaskets.
10. Fix the intake manifold to the cylinder head, fit 5 nuts, tighten to **23–27Nm** in the sequence shown, and check the torque.

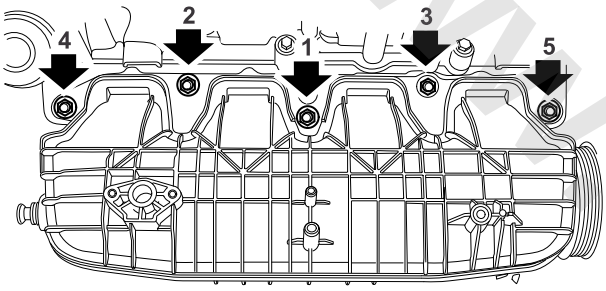

S1113554

11. Adjust the clearance of every spark plug to 0.7–0.8mm.
12. Fit the spark plug and tighten it to **15-20Nm**.
13. Fit the cylinder head.

Cylinder Head Refit

Crankshaft Check

Remove

1. Remove the engine timing chain.

Engine Timing Chain Remove

2. Remove the oil pump.

Oil Pump Remove

3. When moving the crankshaft forward and backward sufficiently, measure the gap between the thrust bearing and the crankshaft with the dial gage. The standard gap value is 0.094-0.277mm. If the measurement is not within the specified range, replace the thrust bearing and conduct another measurement. If it remains out of the standard limit, replace the crankshaft.

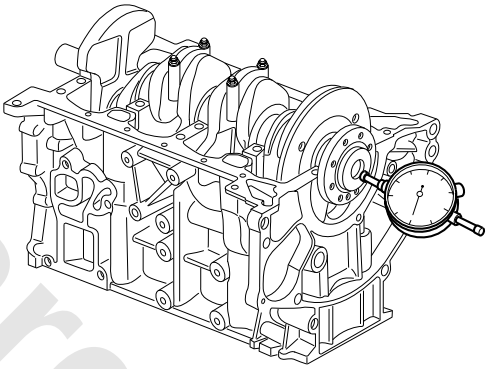

S1113532

4. Remove the engine skirt rack.

Engine Skirt Rack Remove

5. Remove the lower bearing from the bearing seat bore of the engine skirt rack.

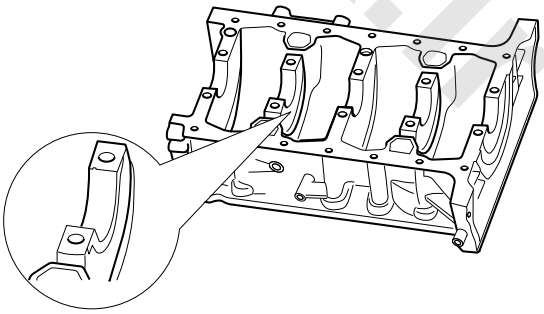

S1113524

6. Remove the connecting rod bearing shell.

Connecting Rod Bearing Shell Remove

7. Remove the crankshaft.
8. Remove the upper main bearing and thrust washer from the cylinder block.

www.cargeek.ir

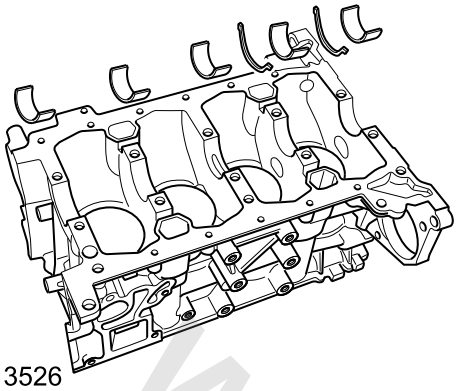

S1113526

9. Remove and discard 3 bolts fixing the signal gear to the crankshaft, and remove the signal gear.

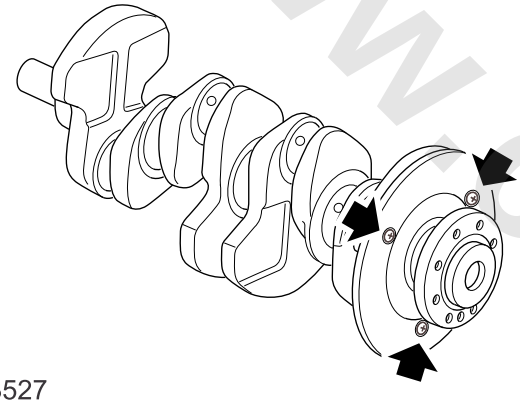

S1113527

10. Remove 4 bolts fixing 4 piston cooling nozzles to the cylinder block.

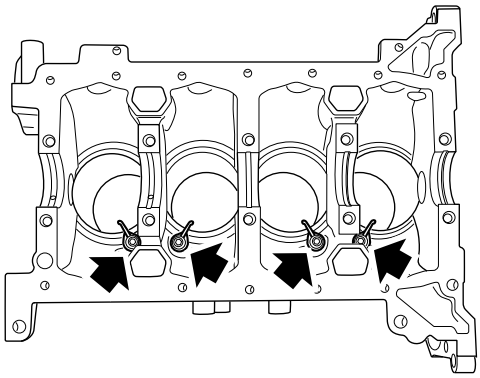

S1113528

11. Check the surface of the cylinder block for scratch, and check the flatness of the cylinder block according to the method shown, do the operation in a cross way. If the flatness is not the specified value (0.08mm), replace the cylinder block.

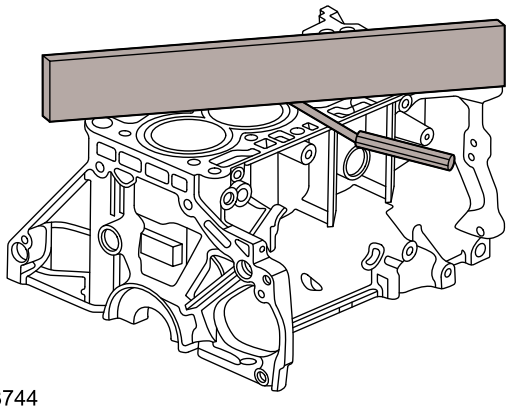

S1113744

12. Measure the cylinder diameter at different points of each cylinder with an inside micrometer, check for wear, out of round and taper. The standard value of the cylinder diameter is Φ88-Φ88.01mm.

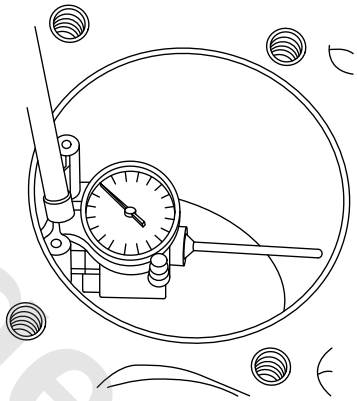

S1113743

Refit

1. Clean the crankshaft, cylinder block, signal gear, skirt rack and mating face of the main bearing, and ensure there is no foreign material.
2. Clean the oil circuit, water channel and ensure there is no foreign material.
3. Check the crankshaft and signal gear for damage or burr.
4. Check the crankshaft bearing for any pit, groove (1), severe scratch or discoloration (2). If any part of the bearing is shiny and polished (3), this may indicate misalignment.

www.cargeek.ir

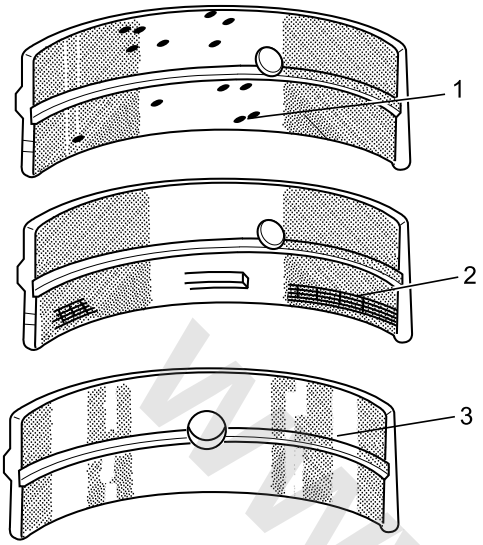

S1113237

5. Check the classification identification of the crankshaft main journal from the flange of the crankshaft flywheel.

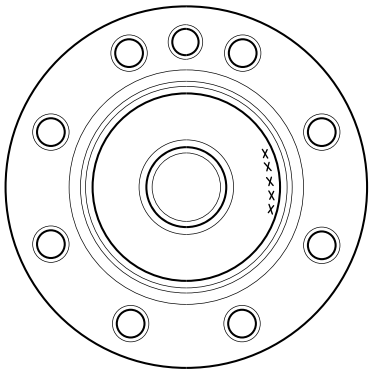

S1113626

6. Check the diameter of the main journal.
7. Check the corresponding classification identification on the cylinder block and skirt rack.
8. The selection order of the bearing starts with the engine (from front to rear), with the timing chain cover located at the first place.
9. Select the correct main bearing according to the group number of the cylinder block/skirt rack and crankshaft, see the table below.

Main Bearing Selection Table						
Crankshaft Main Journal Classification	1		2		3	
Main bearing to be fitted	Upper	Lower	Upper	Lower	Upper	Lower

Main Bearing Selection Table							
Cylinder Block/Skirt Rack Classification	A	Red	Blue	Red	Yellow	Red	Red
	B	Yellow	Blue	Yellow	Yellow	Yellow	Red
	C	Blue	Blue	Blue	Yellow	Blue	Red

10. The colors on the edge of bearing shells which indicate the thickness of bearing shells are as follows:
    a. Yellow = thin
    b. Blue = medium
    c. Red = thick
11. Use a piece of cloth without rough edges and appropriate solvents to clean the sealing surface of the cylinder block and bearing seat.

Tip: Please use SAIC MOTOR recommended solvent.

12. Press the upper main bearing into the bore of the cylinder block bearing seat. Align the bearing with the groove of the bearing seat bore, and ensure the oil orifice is not covered.

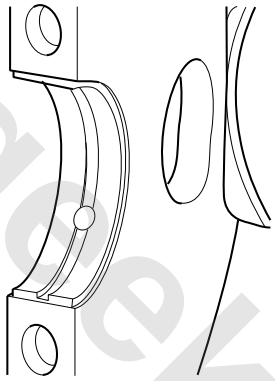

S1113531

13. Clean and fit the new thrust washer to the two sides of the cylinder block main bearing 4.

Tip: The oil groove surface of the thrust washer is the surface contacting with the crankshaft thrust surface, and never fit it reversely.

14. Measure the inner diameter of the crankshaft main bearing with an inside micrometer.

www.cargeek.ir

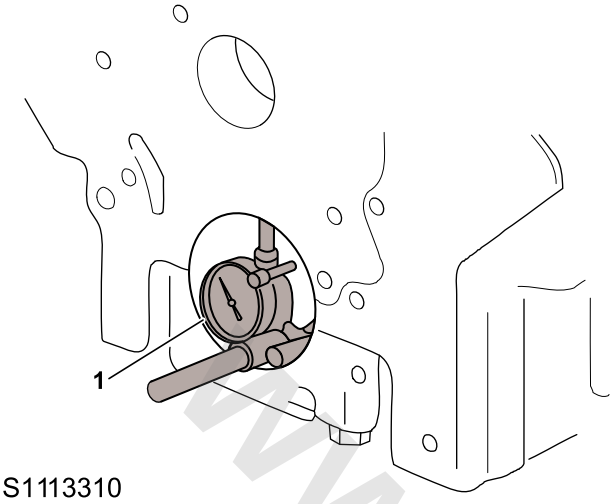

S1113310

15. Check the crankshaft main journal, refer to "Parameter" for details.
16. Fix 4 piston cooling nozzles to the cylinder block and secure with the locating pin, fit 4 bolts, tighten to **18–22Nm**, and check the torque.
17. Fix the signal gear to the crankshaft, fit 3 bolts, tighten them to **10–12Nm**, and check the torque.
18. Apply oil to the crankshaft main journal and inner surface of the upper main bearing shell, and put the crankshaft assembly (fitted with signal gear) into the engine body.
19. Use the **TEN00123** to fix it to bearing 1, 5, and tighten to **9–11Nm**.

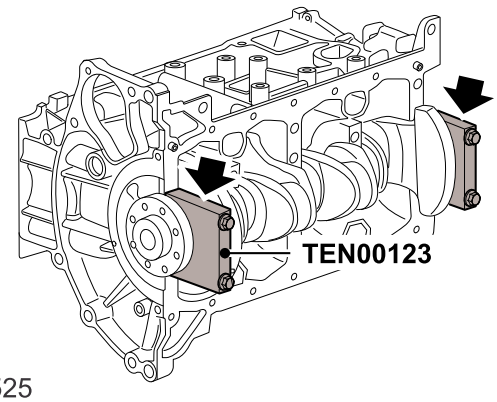

S1113525

20. Rotate the crankshaft to locate cylinder 1 and 4 at the top dead center.
21. Fit the connecting rod bearing shell.

Connecting Rod Bearing Shell Refit

22. Fit the lower bearing to the bore of the skirt rack bearing seat.
23. Fit the engine skirt rack.

Engine Skirt Rack Refit

24. Fit the oil pump.

Oil Pump Refit

25. Fit the timing chain.

Engine Timing Chain Refit

26. Turn the ignition switch to ON position. Connect **VDS** and execute" ECM Adaption Reset " .
27. Wait the 2-5 seconds, turn off the ignition switch, then restart the vehicle .

www.cargeek.ir

www.cargeek.ir

Connecting Rod Bearing Shell Check

Remove

1. Remove the cylinder head.

☞ **Cylinder Head Remove**

2. Remove the engine skirt rack.

☞ **Engine Skirt Rack Remove**

3. Use the **TEN00123** to fix it to bearing 1, 5, and tighten to **9–11Nm**.

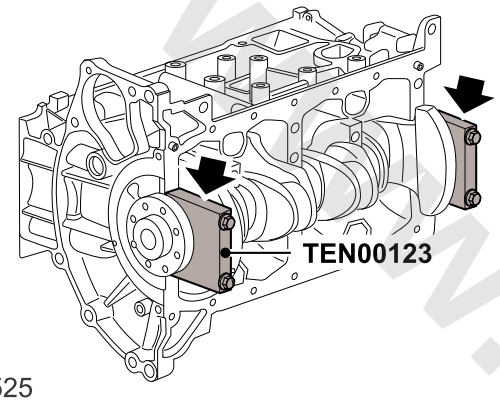

S1113525

4. Rotate the crankshaft to allow the connecting rod bolts to be easily removed.
5. Remove and discard the connecting rod bolt. Remove the shell cap of the connecting rod big end, mark it according to the original position and keep it in order.

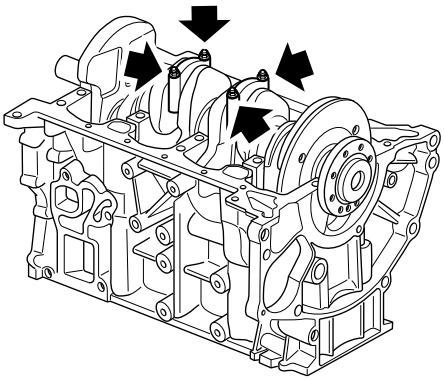

S1113533

6. Remove the half shell from the shell cap of the connecting rod big end.
7. Disconnect the connecting rod from the crankshaft, and remove the other half of the shell from the connecting rod.

Refit

1. Clean the crankshaft journal, connecting rod, connecting rod big end shell cap and bearing shell, and ensure there is no foreign material.
2. With no connecting rod bearing shell fitted, fit the connecting rod cap and new connecting rod bolts, and tighten them to **25Nm+90°**. Measure the diameter of the connecting rod big end with an inside micrometer. If the limit value is exceeded, replace the connecting rod.

Tip: *If the connecting rod shall be replaced, read the group information on the connecting rod.*

3. with the **TEN00130**, fit the two halves of the connecting rod bearing shell to the connecting rod and the corresponding connecting rod big end shell cap.

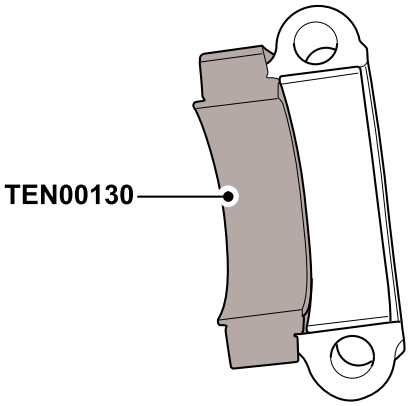

S1113628

4. Apply lubricant to the surface of the connecting rod bearing shell.
5. Locate the piston connecting rod assembly to the crankshaft.
6. The raised letter "ZY" and "A"/"B"/"C" on the shell cap shall face the front of the engine and be fitted to the connecting rod.

Caution: *The cylinder protrusion on the connecting rod and the arrow on the piston shall both face the front of the engine.*

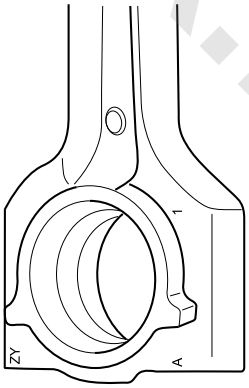

S1113534

7. Check if the identification letter of each connecting rod is on the same side.

www.cargeek.ir

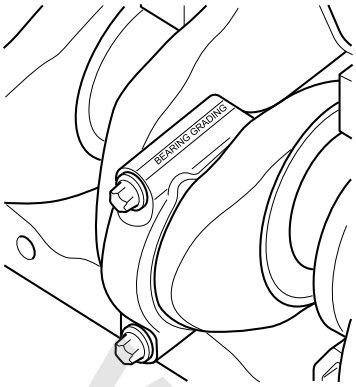

S1113535

8. Fit the connecting rod bolt, tighten to **25Nm+90°**, and check the torque.
9. Rotate the crankshaft and ensure free rotation of the crankshaft connecting rod.
10. Remove the **TEN00123**.
11. Fit the engine skirt rack.

Engine Skirt Rack Refit

12. Fit the cylinder head.

Cylinder Head Refit

Piston Check

Remove

1. Remove the cylinder head assembly.

Cylinder Head Gasket Remove

2. Remove the connecting rod bearing shell.

Connecting Rod Bearing Shell Remove

3. Push the piston to the top of the cylinder bore.

Caution: Remove the carbon deposits on the top of the cylinder bore first to avoid scratching the piston rings and the piston.

4. The connecting rod shall not contact the inner wall of the cylinder bore. Push the piston assembly out of the cylinder bore carefully.

Caution: Please carefully mark each piston and match liner.

5. Fit the connecting rod big end cap into the connecting rod, and lightly tighten the connecting rod bolt.
6. Remove and discard the used piston ring with an expander (tool).

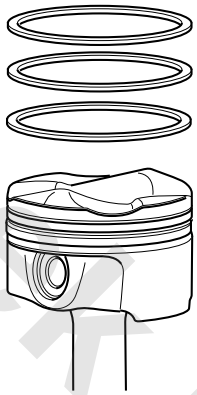

S1113536

Refit

1. Check the pistons for deformation and crack.
2. Clean the piston ring groove and purge the oil passage.
3. Measure the piston ring opening clearance. Use a cylinder block with qualified cylinder barrel, lubricate the piston and piston ring with clean engine oil, insert the piston ring into the middle of the cylinder block with a piston, and measure the piston ring end clearance with a clearance gauge. If the limit value is exceeded, replace the piston ring.

www.cargeek.ir

www.cargeek.ir

S111A405

Piston Ring Opening Clearance	Standard Value (mm))
Top Compression Ring	0.20–0.35
Second Compression Ring	0.40–0.60
Oil Ring	0.20–0.40

4. Measure the side clearance between the piston ring and the piston ring groove with a feeler gauge. If the limit value is exceeded, replace the piston ring or piston.

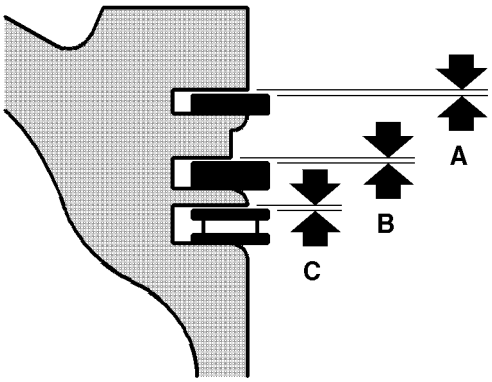

S103334

Side Clearance between Piston Ring and Ring Groove	Standard Value (mm))
Top Compression Ring	0.04-0.08
Second Compression Ring	0.03-0.07
Oil Ring	0.02-0.06

5. Measure the piston diameter at the location 10mm from the bottom of the skirt. The standard value is Φ87.965±0.009mm.

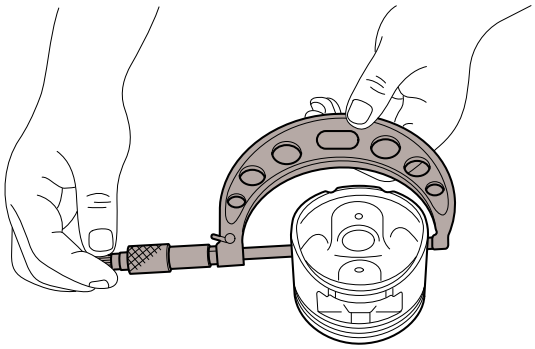

6. Fit the spring of the piston oil ring.
7. With an expander, fit the piston ring in the order of oil ring, second compression ring and second compression.
8. Ensure piston rings are free to rotate, the gap between the two compression rings shall form an angle of 120° and away from the piston thrust side.

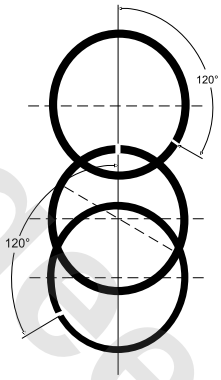

S1113615

9. The oil ring gap and spring gap are arranged at 30°on the opposite side of the piston pin axis.
10. Lubricate the cylinder liner opening, piston and piston ring with engine oil, and ensure the piston ring gap is correctly positioned.
11. Fit the piston connecting rod assembly with piston ring to the **T10016**.
12. Make the front mark on the piston face the front of the engine, and fit the piston into the cylinder liner.

www.cargeek.ir

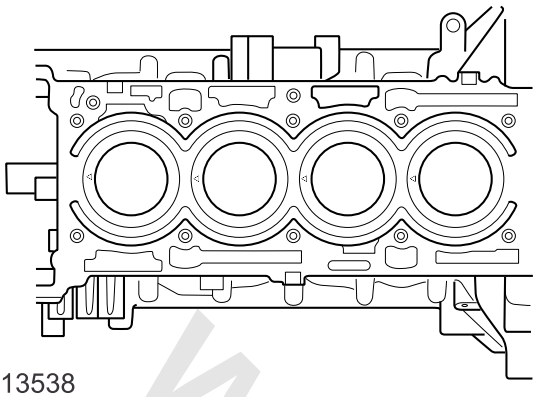

S1113538

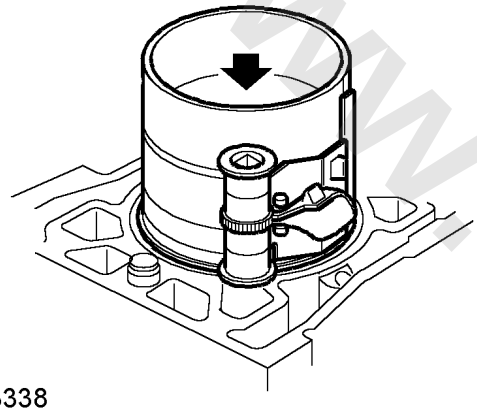

S103338

13. Push the piston connecting rod assembly into the cylinder liner until it is aligned with the upper surface of the cylinder liner.

Caution: Do not push pistons below top face of cylinder liner until big end bearings and caps are to be fitted.

Tip: It is recommended to replace the piston connecting rod assembly as a set.

14. Fit the connecting rod bearing shell.

Connecting Rod Bearing Shell Refit

15. Fit the cylinder head.

Cylinder Head Gasket Refit

Rear Crankshaft Oil Seal

Remove

1. Remove the flywheel - dual clutch automatic transmission.

Flywheel - Dual Clutch Automatic Transmission Remove

2. Release 6 bolts fixing the rear crankshaft oil seal to the engine, and remove and discard the rear crankshaft oil seal.

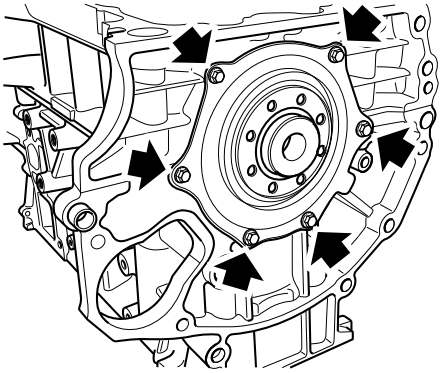

S1113539

Refit

1. Clean the working surface of the cylinder block and crankshaft. Keep these surfaces clean and dry, free from sealant.
2. Apply sealant of 3mm wide to the bracket of the rear crankshaft oil seal.

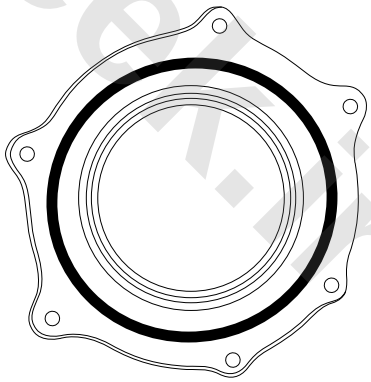

S1113540

3. Fit the **TEN00128** to the rear crankshaft oil seal and prevent the lip from rolling up.

www.cargeek.ir

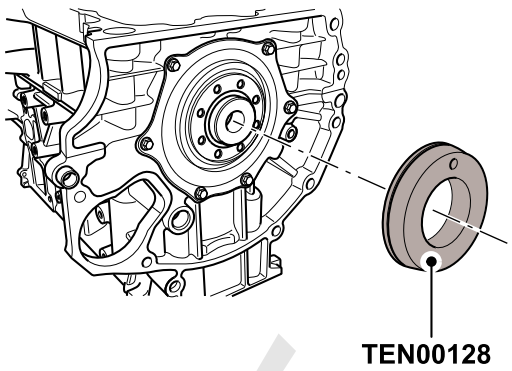

S1113632

4. Align the **TEN00128** and the real crankshaft oil seal, fit 2 locating pins and 6 bolts, then tighten to **9–11Nm** in the sequence shown and check the torque.

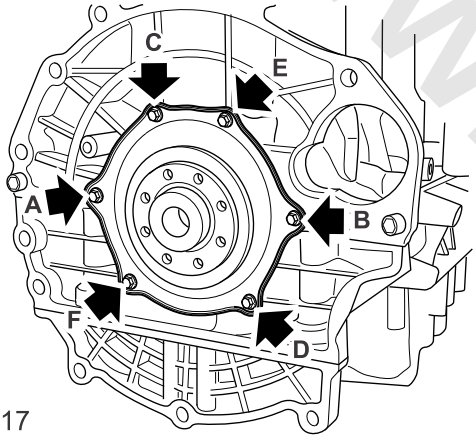

S1113617

5. Remove the **TEN00128** and check oil seal lip for rollup.
6. Fit the flywheel-dual clutch automatic transmission.

Flywheel – Dual Clutch Automatic Transmission Refit

Front Crankshaft Oil Seal

Remove

1. Remove the crankshaft torsional vibration damper.

Crankshaft Vibration Damper Remove

2. With a slotted screwdriver r or equivalent, remove the front crankshaft oil seal, and take care not to scratch the ID of the hole on the front cover.

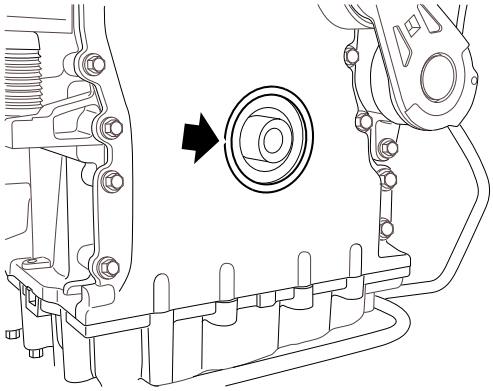

S1113542

Refit

1. Clean the operating surface of the crankshaft and oil seal groove on the chain cover, and ensure there is no foreign material.
2. Fit the front crankshaft oil seal into the corresponding hole of the front lower cover (see the figure), press the oil seal fully with the **TEN00129**, and the top of the oil seal shall be 1.8-2.2mm from the plane of the front cover.

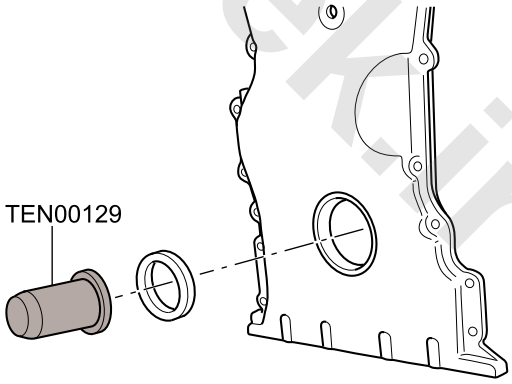

S1113543

3. Fit the crankshaft pulley.

Crankshaft Pulley Refit

4. Fit the auxiliary drive belt.

Auxiliary Drive Belt Refit

www.cargeek.ir

Flywheel - Dual Clutch Automatic Transmission

Remove

1. Remove the dual clutch automatic transmission.

☞ **Dual Clutch Automatic Transmission Remove**

2. Secure the flywheel with the **TEN00122** to restrict rotation of the crankshaft.

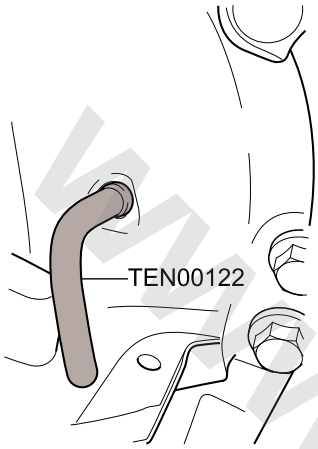

S1113544

3. Remove and discard 8 bolts fixing flywheel to the crankshaft.

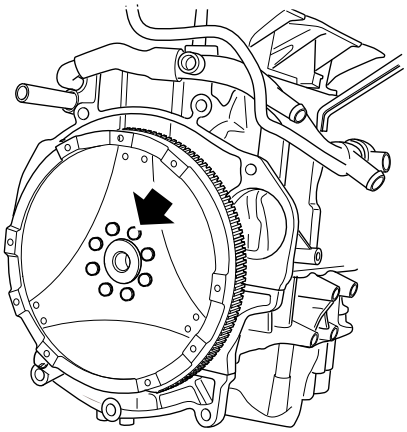

S1113619

4. Remove the flywheel from the crankshaft.
5. Remove the **TEN00122**.

Refit

1. Use a saw to make two saw cuts on the bolt used for the flywheel at an angle of 45° to the bolt shank, and clean the bolt hole in the crankshaft with the sawed bolt.
2. Clean the flywheel and rear flange face of the crankshaft, and ensure there is no foreign material.
3. Fit the flywheel to the crankshaft with locating pins.
4. Fit 8 bolts of the flywheel and pre-tighten the bolt.
5. Secure the flywheel with the **TEN00122** to restrict rotation of the crankshaft.
6. Tighten the flywheel bolt to **20Nm+60°** in diagonal sequence.
7. Remove the **TEN00122**.
8. Fit the dual-clutch automatic transmission assembly.

☞ **Dual Clutch Automatic Transmission Refit**

9. Turn the ignition switch to ON position. Connect **VDS** and execute" ECM Adaption Reset " .
10. Wait the 2-5 seconds, turn off the ignition switch, then restart the vehicle .

www.cargeek.ir

Valve

Remove

1. Remove the cylinder head.

Cylinder Head Gasket Remove

2. With a viscous magnet, remove 16 roller rocker arms and hydraulic tappet from the cylinder head, and keep them in the mounting sequence.

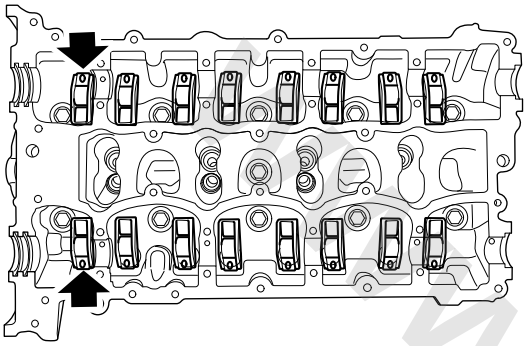

S1113521

3. Remove 5 nuts fixing the intake manifold to the cylinder head, remove the intake manifold and discard the gasket.

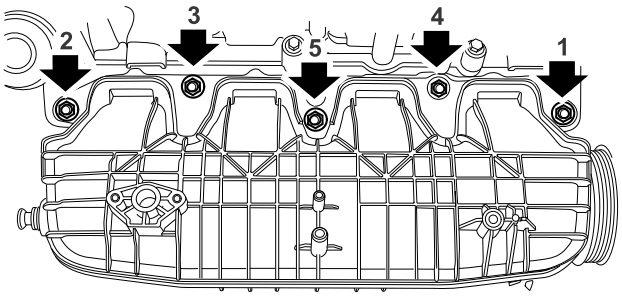

S1113513

4. Remove 3 bolts fixing the E-PAS idler support to cylinder head, and remove the idler and its support.

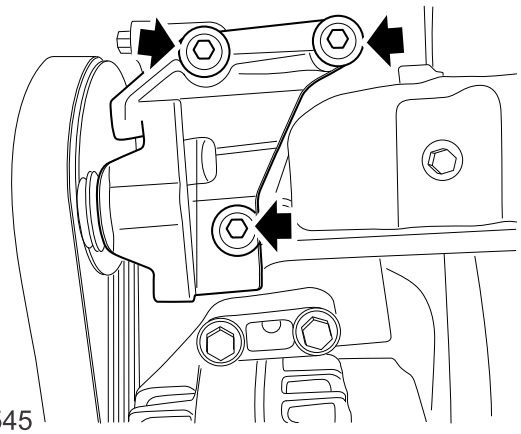

S1113545

5. Remove 4 bolts fixing the exhaust manifold heat shield to the exhaust manifold to release the heat shield.

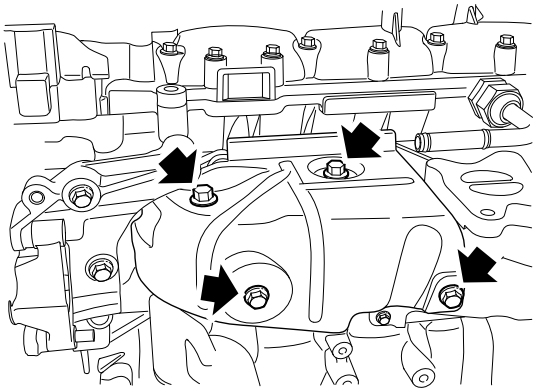

S1113514

6. Remove and discard 8 nuts fixing the exhaust manifold to the engine, remove the exhaust manifold and discard the gasket.

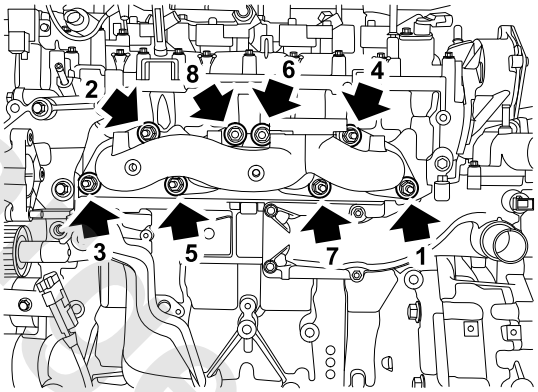

S1113515

7. Clear the dirt in the spark plug gap, and remove the spark plug from the cylinder head.

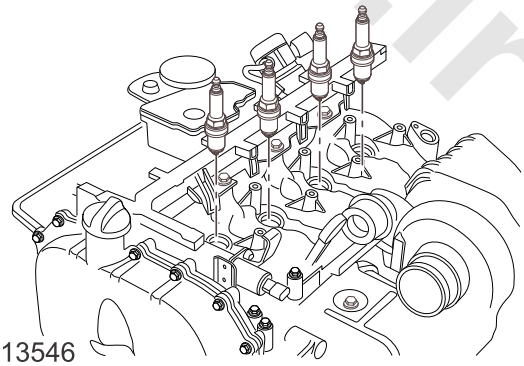

S1113546

8. Compress the valve spring with the valve spring tool, take away the locking plate and release the valve spring, then remove the valve spring tool.

www.cargeek.ir

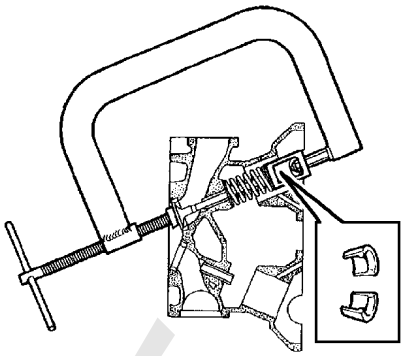

S103300

9. Remove the valve spring, valve spring cover and valve.

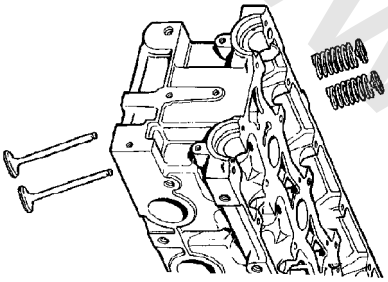

S103301

10. Remove the valve oil seal and discard it.

Refit

1. Remove the carbon deposit on the valve guide, valve, valve seat and combustion surface, and remove all loose particles of the carbon deposit.
2. Check valve spring condition:

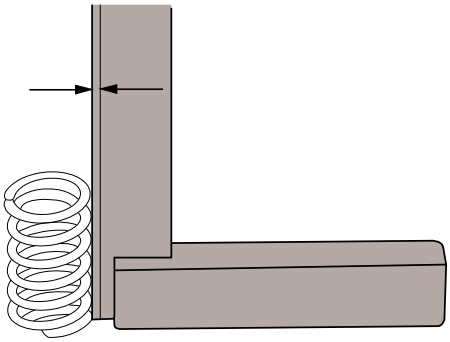

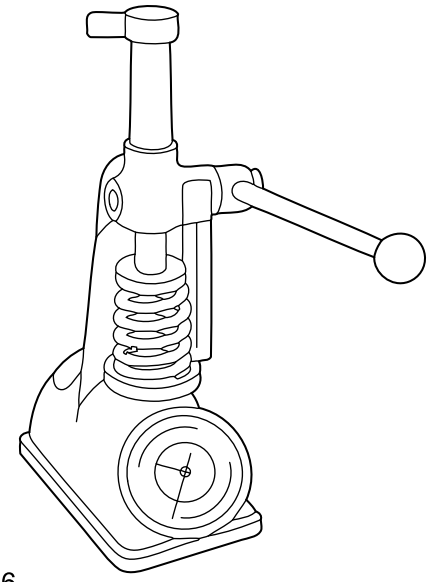

S1113266

Valve spring	
Free Height	52.3 mm
Mounting Height	40.2 mm
Mounting Load	250N
Load with Valve Open	250N

3. Check the parameter of the valve, if it is unacceptable, replace the valve.

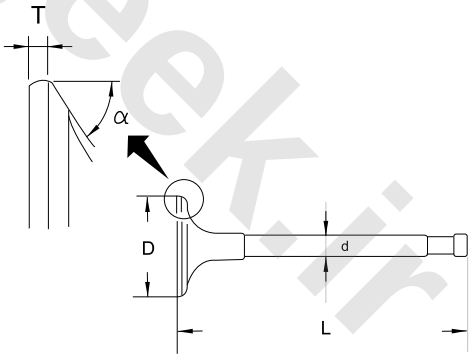

Standard Value	
Valve head diameter (D)	
Intake Valve	34.2±0.1mm
Exhaust Valve	28.3±0.1mm
Valve length (L)	
Intake Valve	113.4-113.9mm
Exhaust Valve	116.29-116.79mm
Valve stem diameter (D)	

www.cargeek.ir

Standard Value	
Intake Valve	5.475±0.0075mm
Exhaust Valve	5.455±0.0075mm
Valve seat angle (a)	
Intake Valve	45°15¢±15¢
Exhaust Valve	45°15¢±15¢
Valve thickness (T)	
Intake Valve	1.65±0.15mm
Exhaust Valve	1.75±0.15mm

4. Make sure that the tappet, valve, valve spring, spring cover and locking clamp are clean.
5. Lubricate the valve and valve stem oil seal.
6. Fit the valve stem oil seal onto the valve guide with the oil seal tool.
7. Fit the valve, spring and spring cover, and fix the valve tool to the valve and compression spring, and fit the locking plate.
8. Repeat the above steps to fit the remaining valves.
9. Fit new gasket to the exhaust manifold, secure the exhaust manifold on the engine, fit 8 gaskets and new nut with high temperature antiwelding agent, then tighten to **23–27Nm** in the sequence shown and check the torque.

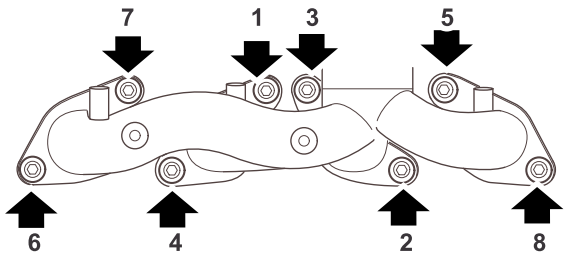

S1113522

10. Fix the exhaust manifold heat shield to the exhaust manifold, fit 4 bolts, tighten to **22–28Nm** and check the torque.
11. Fix the E-PAS idler support to the cylinder head, fit 3 bolts, tighten to **23–27Nm** and check the torque.
12. Clean the mating surface of the intake manifold and cylinder head and ensure there is no foreign material.
13. Fit the new intake manifold gaskets.
14. Fix the intake manifold to the cylinder head, fit 5 nuts, tighten to **23–27Nm** in the sequence shown, and check the torque.

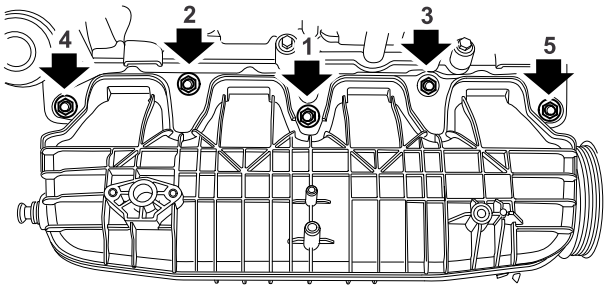

S1113554

15. Fit the hydraulic tappet into the corresponding mounting bore on the cylinder head, and lubricate it with clean engine oil.
16. Ensure the roller rocker arm holder is secure, align the ball groove of the roller rocker arm with the plunger ball head of the hydraulic tappet, and gently press the ball head into the ball groove.

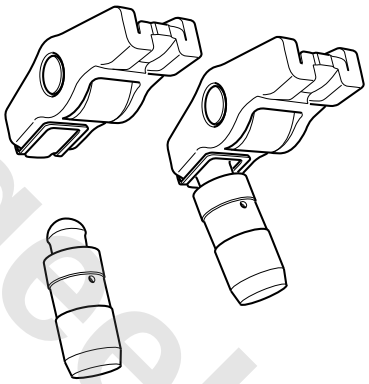

S1113548

17. Fit the cylinder head.

☞Cylinder Head Gasket Refit

www.cargeek.ir

Valve Hydraulic Tappet Assembly

Remove

1. Remove the camshaft.

☞ **Camshaft Remove**

2. Remove rocker arm assembly of the valve actuator and lay it aside in order.

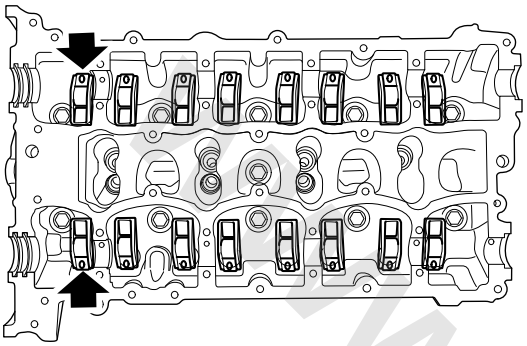

S1113521

3. Remove valve hydraulic tappet assembly and lay it aside in order.

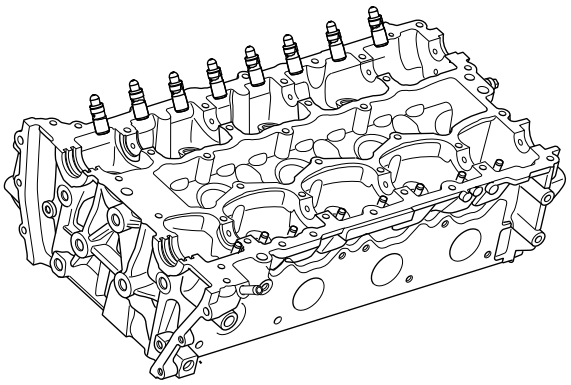

S1113547

Refit

1. Fit the valve hydraulic tappet assembly into the corresponding mounting bore on the cylinder head, and lubricate it with clean engine oil.
2. Ensure the rocker arm assembly holder of the valve actuator is secure, align the ball groove of the rocker arm assembly of the valve actuator with the plunger ball head of the hydraulic tappet, and gently press the ball head into the ball groove.

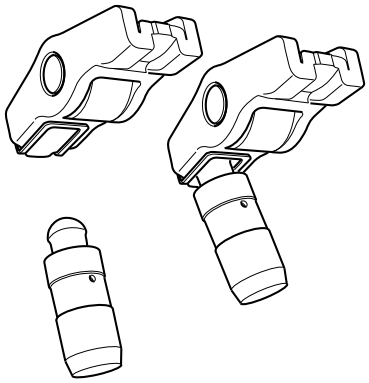

S1113548

3. Ensure the coaxiality of the rocker arm assembly and the tip of the valve stem, and lubricate the rocker arm roller with clean engine oil.

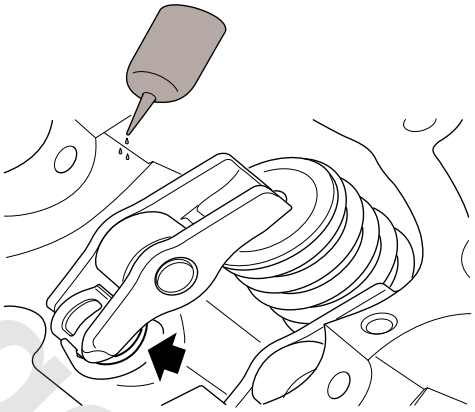

S1113523

4. Fit the camshaft.

☞ **Camshaft Refit**

www.cargeek.ir

Camshaft Cover

Remove

1. Disconnect the battery negative.
2. Remove the engine cover.
3. Remove 4 ball head bolts securing the engine cover.
4. Remove the dipstick.
5. Drain the engine oil.

Engine Oil Drain

6. Drain the cooling system.

Coolant - Drain

7. Remove the oil-gas separator.

Oil-gas Separator Remove

8. Remove the full load breather pipe from the turbocharger intake pipe.
9. Remove the high-pressure oil pump.

High-pressure Oil Pump Remove

10. Remove 1 bolt and 1 nut fixing the low-pressure fuel pipe clamp to the camshaft cover, and take away the low-pressure fuel pipe.

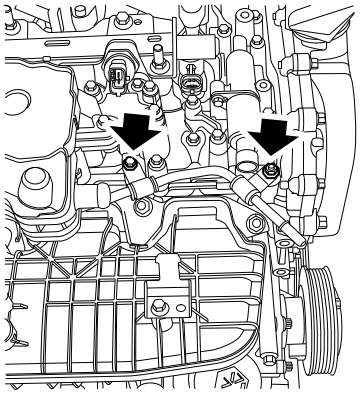

S1113593

11. Remove the fuel rail.

Fuel Rail Remove

12. Remove overflow pipe A.

Overflow Pipe A Remove

13. Remove the ignition module.

Ignition Module Remove

14. Remove the cover of the CVVT.

CVVT Cover Remove

15. Remove the turbocharger control solenoid valve.

Turbocharger Control Solenoid Valve Remove

16. Remove the intake/exhaust camshaft position sensors.

Intake Camshaft Position Sensor Remove
Exhaust Camshaft Position Sensor Remove

17. Remove the mechanical vacuum pump.

Mechanical Vacuum Pump Remove

18. Remove 3 bolts (1) fixing the observation hole cover of the intake camshaft to the camshaft cover, remove and discard the observation hole cover of the intake camshaft.
19. Remove 1 bolt and 1 nut (2) fixing the harness bracket of the front oxygen sensor to the camshaft cover, and remove the harness bracket of the front oxygen sensor.

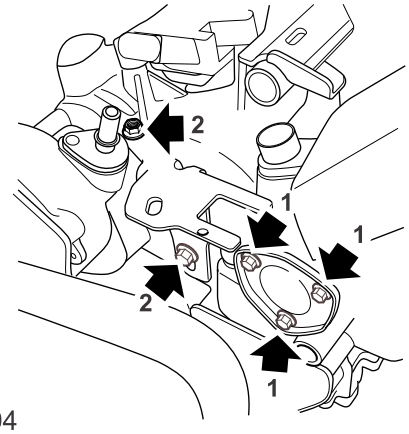

S1113594

20. Remove all harness clips from the engine and take away the harness.
21. Remove 1 nut (1) fixing the turbocharger inlet pipe clamp to the stud of the camshaft cover.
22. Remove 1 bolt (2) fixing the turbocharger outlet pipe clamp to the heat shield bracket of the cylinder head.

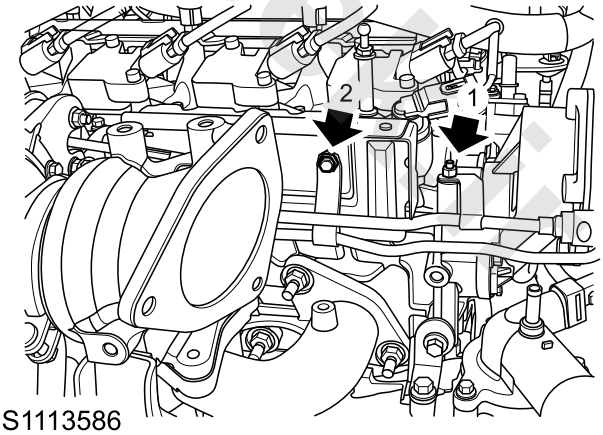

S1113586

23. Remove the timing chain cover.

Timing Chain Cover Remove

24. Remove the remaining 4 bolts fixing the heat shield of the cylinder head to the heat shield bracket and remove the heat shield.

www.cargeek.ir

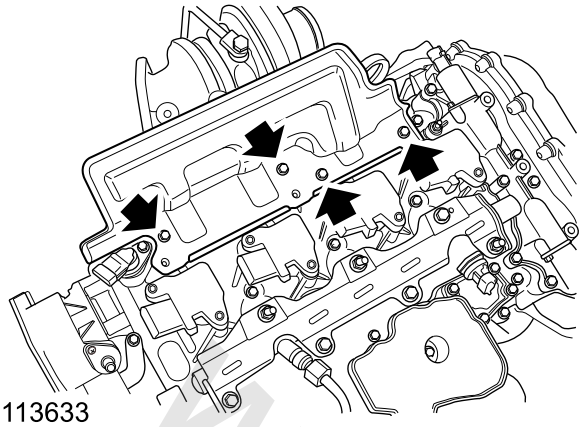

S1113633

25. Remove 2 bolts fixing the heat shield bracket of the cylinder head to the camshaft cover, and remove the heat shield bracket.

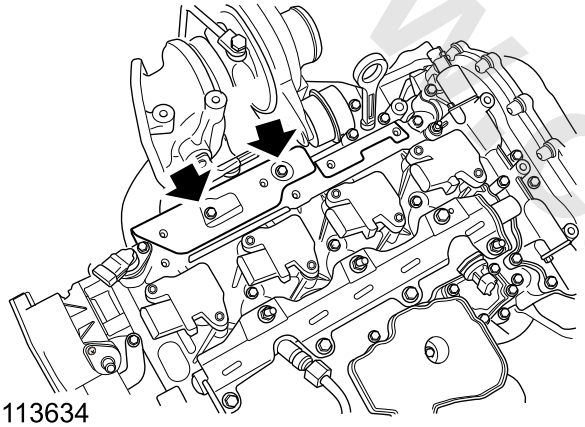

S1113634

26. Remove 35 bolts fixing the camshaft cover to the cylinder head in the sequence shown, and remove the camshaft cover.

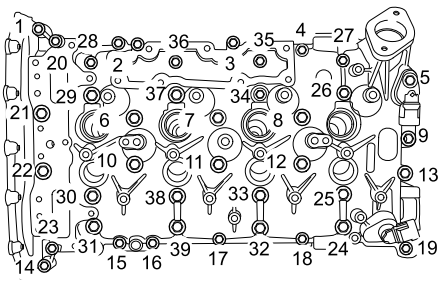

S1113519

27. Remove 2 bolts fixing the upper guide rail of the timing chain to the camshaft cover and remove the upper guide rail.

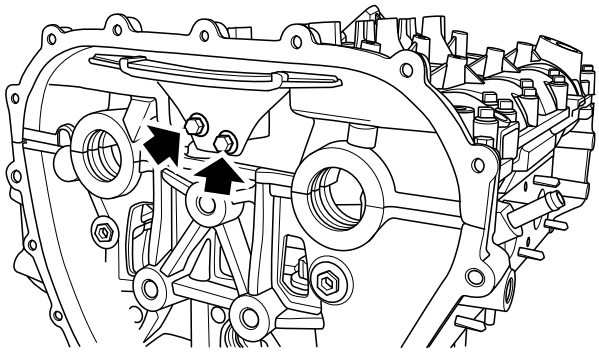

S1113596

Refit

1. Clean the front cover, camshaft cover and mating face of the cylinder head and ensure there is no foreign material.
2. If any locating pin is missing, fit a new one to the cylinder head.
3. Apply engine oil to the camshaft journal evenly.
4. Apply sealant of 3mm wide to the camshaft cover (see the figure).

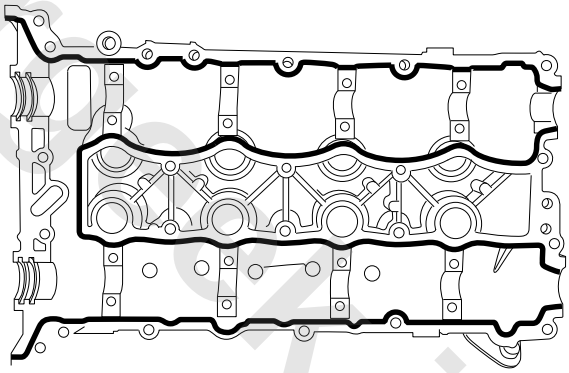

S1113597

5. Fix the upper guide rail to the camshaft cover, fit 2 bolts, tighten to **9–11Nm**, and check the torque.
6. Secure the camshaft cover on the cylinder head with 3 locating pins, then fix the solenoid valve bracket of the turbocharger to the camshaft cover and fit 2 bolts.
7. Fix the heat shield bracket of the cylinder head to the camshaft cover, fit 2 bolts and the remaining 35 bolts, then tighten to **9–11Nm** in the sequence shown and check the torque.

Caution: *Mounting position of the 2 studs.*

www.cargeek.ir

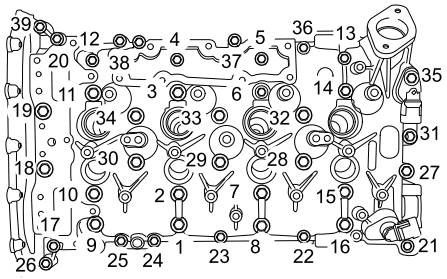

S1113518

8. Fix the heat shield of the cylinder head to the heat shield bracket, fit 4 bolts, tighten to **9–11Nm** and check the torque.
9. Fit the timing chain cover.

Timing Chain Cover Refit

10. Fix the turbocharger outlet pipe clamp to the heat shield bracket of the cylinder head, fit 1 bolt, tighten to **8–12Nm** and check the torque.
11. Fix the turbocharger inlet pipe clamp to the stud of the camshaft cover, fit 1 nut, tighten to **8–12Nm** and check the torque.
12. Fix the oxygen sensor connector support to the camshaft cover, fit 1 bolt and 1 nut, tighten to **8–12Nm**, and check the torque.
13. Apply glue to the observation hole cover of the intake camshaft according to the method shown.

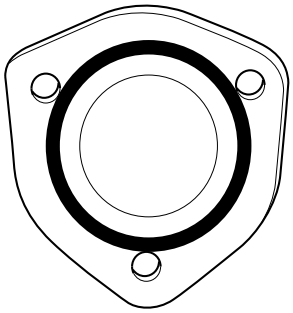

S1113598

14. Fix the observation hole cover of the intake camshaft to the camshaft cover, fit 3 bolts, tighten to **5–7Nm** and check the torque.
15. Fit the mechanical vacuum pump.

Mechanical Vacuum Pump Refit

16. Fit the intake/exhaust camshaft position sensors.

Intake Camshaft Position Sensor Refit
Exhaust Camshaft Position Sensor Refit

17. Fit the turbocharger control solenoid valve.

Turbocharger Control Solenoid Valve Refit

18. Fit the cover of the CVVT.

CVVT Cover Refit

19. Fit the ignition module.

Ignition Module Refit

20. Fit overflow pipe A.

Overflow Pipe A Refit

21. Fit the fuel rail.

Fuel Rail Refit

22. Fit the high-pressure oil pump.

High-pressure Oil Pump Refit

23. Fix the low-pressure fuel pipe clamp to the camshaft cover, fit 1 bolt and 1 nut, tighten to **9–11Nm**, and check the torque.
24. Fit the full load vacuum pipe to the turbocharger intake pipe.
25. Fit the oil-gas separator.

Oil-gas Separator Refit

26. Fix all harness clips to the corresponding position of the engine.
27. Fit 4 ball head bolts securing the engine cover, tighten to **9–11Nm**, and check the torque.
28. Refill engine oil.

Engine Oil Refill

29. Fit the engine cover.
30. Insert the dipstick.
31. Connect the battery negative.

www.cargeek.ir

Camshaft - Intake or Exhaust

Remove

1. Secure the vehicle on the lift.
2. Disconnect the battery negative.
3. Drain the engine oil.

Engine Oil Drain

4. Remove the phase modulator.

Phase Modulator Remove

5. Remove the camshaft cover.

Camshaft Cover Remove

6. Identify the position of each camshaft carefully, and remove the camshaft from the camshaft seat.

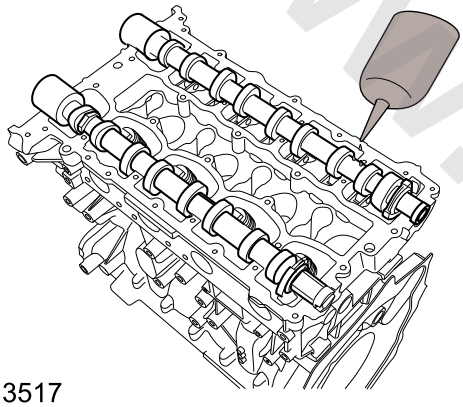

S1113517

Refit

1. Clean the camshaft.
2. Clean the bolt hole and pin of the camshaft cover.
3. Withe a micrometer, check the diameter of each intake/exhaust camshaft journal, the journal diameter of the 1st gear is Φ31.957-Φ31.972mm, of the 2-6 gear is Φ24.96-Φ24.98mm.

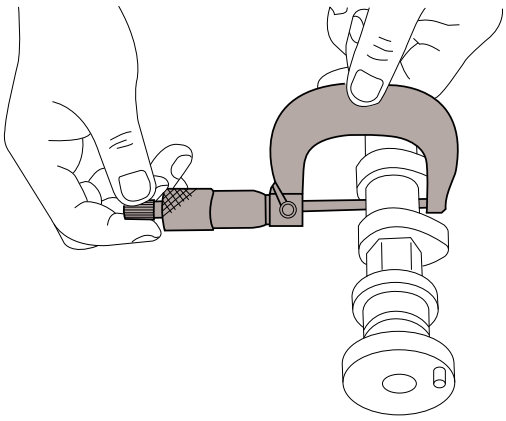

4. Blow the oil passage dry and lubricate the camshaft bearing seat.
5. According to the camshaft thrust surface, put the camshaft into the camshaft bearing seat on the cylinder head.
6. Apply engine oil to the camshaft journal evenly.
7. Fit the camshaft cover.

Camshaft Cover Refit

8. Fit the intake/exhaust phase modulator.

Phase Modulator Refit

9. Refill engine oil.

Engine Oil Refill

10. Connect the battery negative.

www.cargeek.ir

Intake Manifold Gasket

Remove

1. Disconnect the battery negative.
2. Remove the engine cover.
3. Remove the full load vacuum pipe from the turbocharger intake pipe.
4. Remove the oil-gas separator.

Oil-gas Separator Remove

5. Remove the canister solenoid.

Canister Solenoid Remove

6. Disconnect the intake air temperature/manifold absolute pressure sensors, and take away the harness.

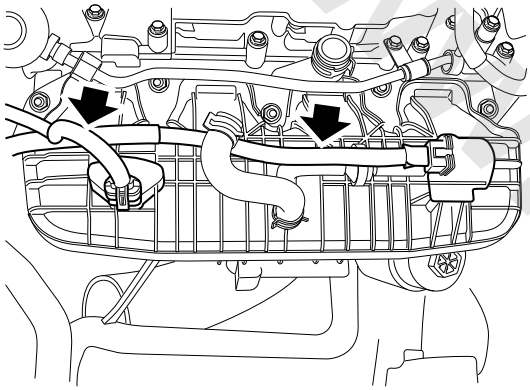

S1113549

7. Hold the red anti-looseness part to the right, until the red anti-looseness part fits the right part, and remove the vacuum pipe (1).
8. Release the clamp and remove the two vacuum hose (2) from the intake manifold.

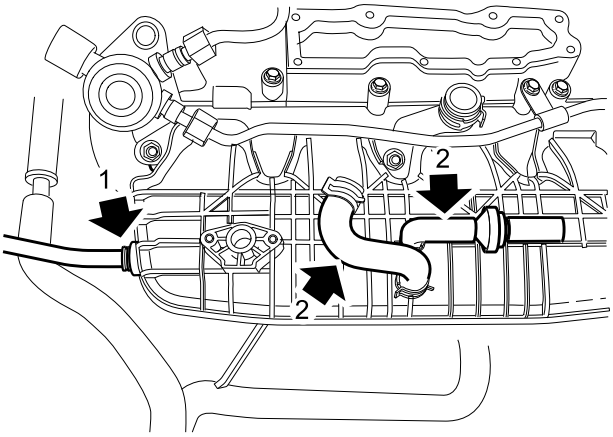

S1113550

9. Remove the shield of the high-pressure oil pump.

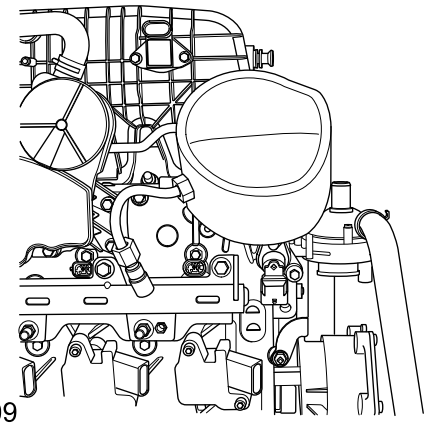

S1133509

10. Loosen the clamps and disconnect the intake pipe from the throttle body.

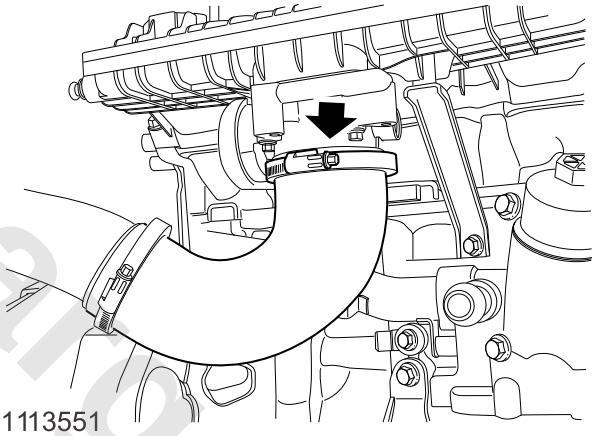

S1113551

11. Disconnect the connector of the throttle.

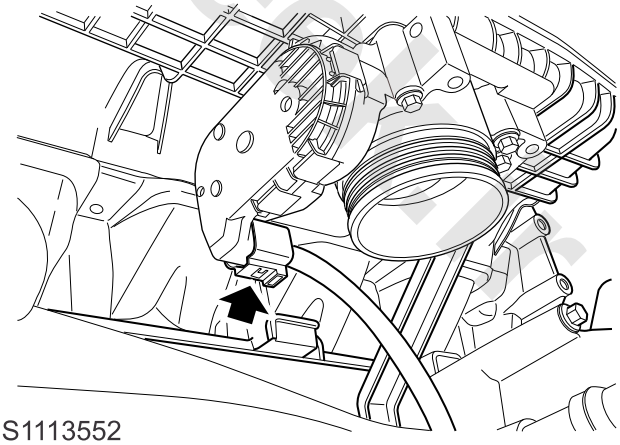

S1113552

12. Remove 1 bolt fixing the intake manifold bracket to the intake manifold.

www.cargeek.ir

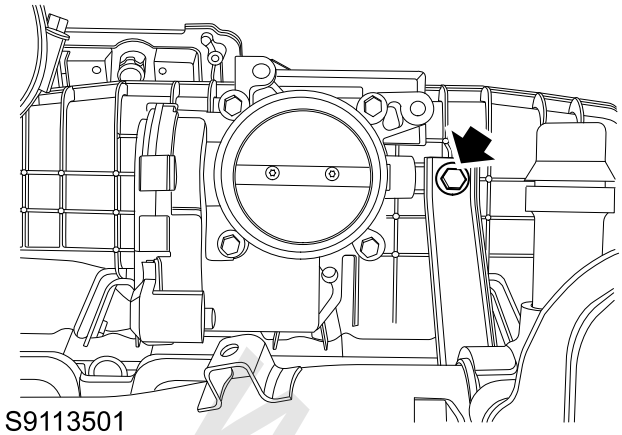

S9113501

13. Remove 5 nuts fixing the intake manifold to the cylinder head, remove the intake manifold and discard the gasket.

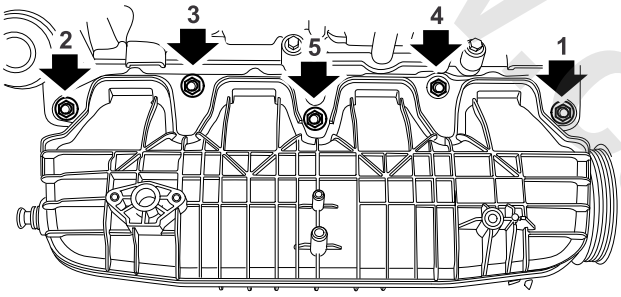

S1113513

14. If necessary, remove 5 studs of the intake manifold.

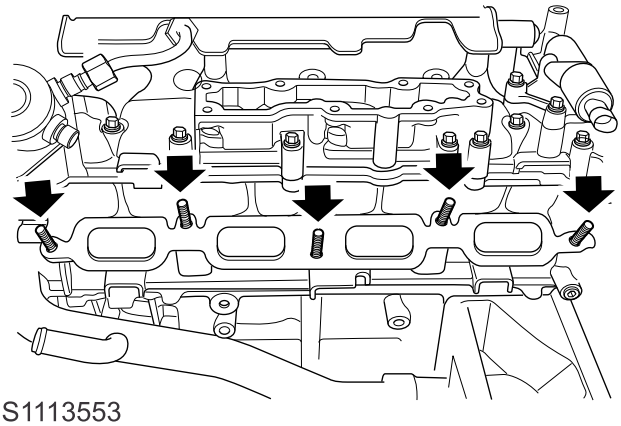

S1113553

Refit

1. Clean the mating surface of the intake manifold and cylinder head and ensure there is no foreign material.
2. Fit 5 new studs to the cylinder head, tighten to **9–11Nm** and check the torque.
3. Fit the new intake manifold gaskets.
4. Fix the intake manifold to the cylinder head, fit 5 nuts, tighten to **23–27Nm** in the sequence shown, and check the torque.

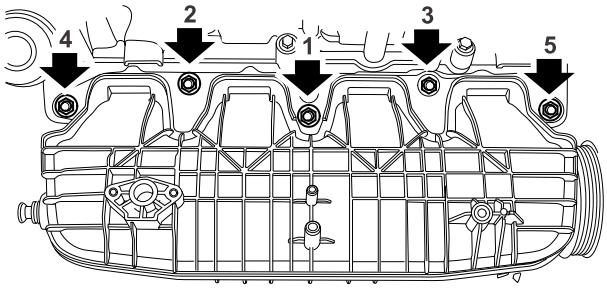

S1113554

5. Fix the intake manifold bracket to the intake manifold, fit 1 bolt, tighten to **22–28Nm** and check the torque.
6. Connect the connector of the throttle body.
7. Connect throttle intake pipe to the throttle body and secure with clamps.
8. Fit the shield of the high-pressure oil pump.
9. Connect the two vacuum hoses to the intake manifold, and fix it with clamps.
10. Insert the vacuum hose into the red anti-looseness part, until the step surface of the vacuum hose fits into the red anti-looseness part.
11. Connect the connector of the intake air temperature and manifold absolute pressure, and reset the harness.
12. Fit the canister solenoid.

Canister Solenoid Refit

13. Fit the oil-gas separator.

Oil-gas Separator Refit

14. Fit the full load vacuum pipe to the turbocharger intake pipe.
15. Fit the engine cover.
16. Connect the battery negative.

www.cargeek.ir

www.cargeek.ir

Exhaust Manifold Gasket

Remove

1. Disconnect the battery negative.
2. Remove the turbocharger.

Turbocharger Remove

3. Remove 4 bolts fixing the exhaust manifold heat shield to the exhaust manifold to release the heat shield.

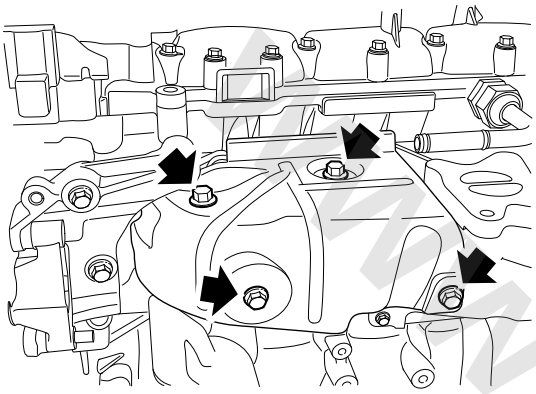

S1113514

4. Remove and discard 8 nuts fixing the exhaust manifold to the engine.

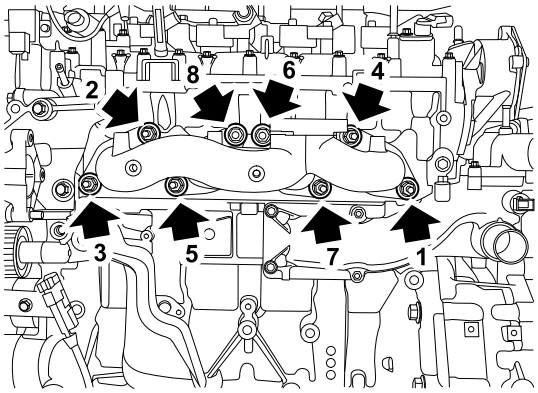

S1113515

5. Remove the exhaust manifold and discard the gasket.
6. Remove the exhaust manifold stud from the cylinder head and discard it.

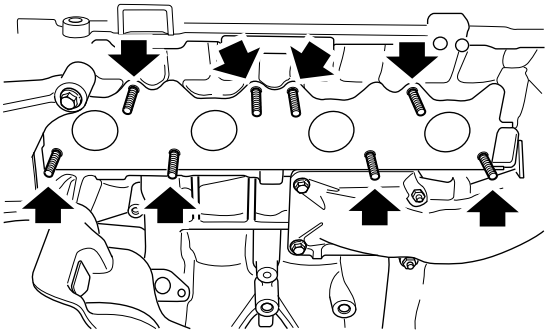

S1113556

Refit

1. Clean the mating surface of the exhaust manifold and cylinder head.
2. Apply high temperature antiwelding agent to the 8 studs of the exhaust manifold, fit the stud to the cylinder head, tighten to **13–17Nm** and check the torque.
3. Fit new gasket to the exhaust manifold, secure the exhaust manifold on the engine, fit 8 gaskets and new nut with high temperature antiwelding agent, then tighten to **23–27Nm** in the sequence shown and check the torque.

Caution: *The exhaust manifold gasket with black coating faces the exhaust manifold.*

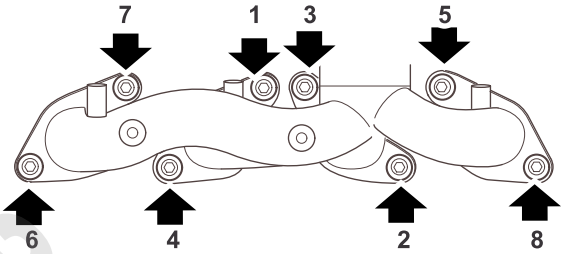

S1113522

4. Fix the exhaust manifold heat shield to the exhaust manifold, fit 4 bolts, tighten to **22–28Nm** and check the torque.
5. Apply high temperature antiwelding agent to the stud - turbocharger to exhaust manifold, fit the small flange of the exhaust manifold, tighten to **8–12Nm** and check the torque.
6. Fit the turbocharger.

Turbocharger Refit

7. Connect the battery negative.

www.cargeek.ir

Oil Pump

Remove

1. Secure the vehicle on the lift.
2. Drain the engine oil.

Engine Oil Drain

3. Remove the oil strainer.

Oil Strainer Remove

4. Lock the oil pump sprocket with the **TEN00126**, and remove 1 bolt fixing the oil pump sprocket to the oil pump.

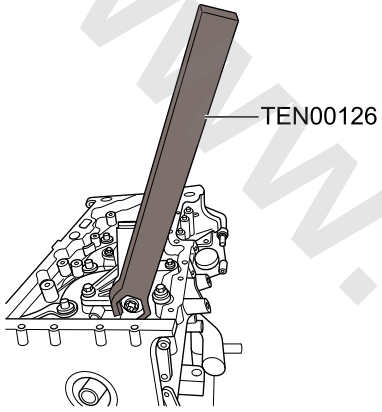

S1113557

5. Remove 4 bolts fixing the oil pump to the skirt rack, and remove the oil pump and pipe connector - oil pump to skirt rack.

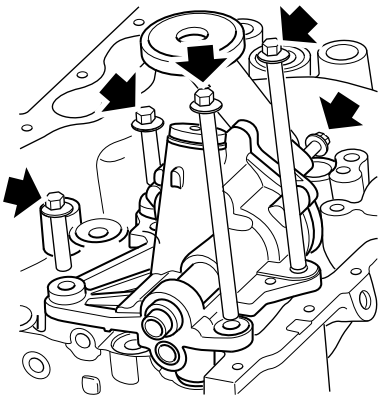

S1113622

Refit

1. Clean the oil pump, pipe connector - oil pump to skirt rack and mating face of the skirt rack, and ensure there is no foreign material.
2. Fit new pipe connector, apply a little oil to the pipe connector - oil pump to skirt rack, and fit it into the oil inlet on the skirt rack.
3. Fix the oil pump to the skirt rack, fit 4 bolts, tighten to **23–27Nm** in the sequence shown, and check the torque.

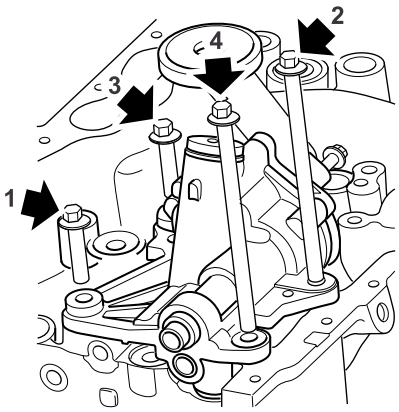

S1113621

4. Release the oil pump chain tensioner, fit the oil pump sprocket (the side with the timing identification shall face outward) to the oil pump chain, and turn the oil pump by hand and allow its D-hole to align with the D-shaft of the oil pump, then release the oil pump chain tensioner. After the operation, check if the chain is properly pressed on the surface of the tensioner guide plate (not the raised side edge).
5. With the **TEN00126**, lock the oil pump sprocket, fit the oil pump sprocket bolt, tighten to **68–72Nm** and check the torque.
6. Fit the oil strainer.

Oil Strainer Refit

7. Refill engine oil.

Engine Oil Refill

www.cargeek.ir

www.cargeek.ir

Engine Oil and Oil Filter

Remove

1. Remove the engine cover.
2. Remove the oil filler cap.
3. Raise the vehicle on a lift.

Warning: Do not work on or under a vehicle supported only by a jack. Always support the vehicle on safety stands.

4. Put the oil pan under the drain plug of the engine oil pan, remove the drain plug and discard the seal washer.

Warning: Observe due care when draining engine oil as the oil can be very hot.

Warning: Avoid excessive skin contact with used engine oil. Used engine oil contains potentially harmful contaminants which may cause skin cancer or other serious skin disorders.

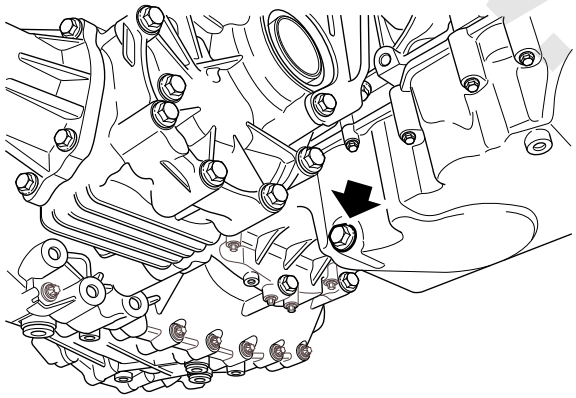

S1113560

5. Drain the engine oil.
6. Fit a new seal washer, fix the drain plug of the oil pan to the oil pan, tighten to **20–25Nm** and check the torque.
7. Protect the fuel line around the oil filter cover with a clean cloth or equivalents.
8. Release the oil filter cover (1), and wait for few minutes before removing it.

Warning: *Never use an open-end wrench on the top hexagon head of the oil filter cover.*

9. Remove the oil filter (2) from the cover and discard it.

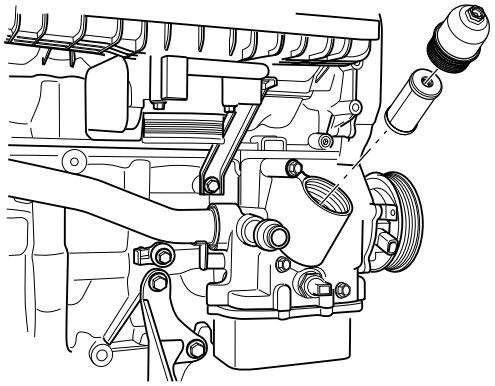

S1113561

10. Clean the oil filter housing in the engine cylinder block.

Refit

1. Fit a new oil filter and a new seal ring to the oil filter cover.
2. With an appropriate wrench, fit the oil filter and oil filter cover, tighten the oil filter cover until it is properly located, and the torque shall be less than **20–25Nm**.

Caution: *Excessive tightening of the oil filter cover may damage the cover and cause oil leak.*

Warning: *Never use an open-end wrench on the top hexagon head of the oil filter cover.*

3. Refill engine oil.

☞ **Capacity**

4. Fit the oil filler cap.
5. Start and run the engine until the oil pressure warning lamp goes out.
6. Stop the engine, and check the engine oil level.
7. Check for any signs of leakage.
8. Fit the engine cover.

www.cargeek.ir

Engine Oil Pressure Check

Check

1. Disconnect the battery negative.
2. Remove the oil pressure switch.

Oil Pressure Switch Remove

3. Remove the seal ring from the oil pressure switch, and fit it to the oil pressure gauge connector.
4. Fit and tighten the oil pressure gauge connector to the original oil pressure switch.
5. Connect the oil pressure gauge **T10001** and **T10002**, and tighten the connector.
6. Check the engine oil, refill if necessary.
7. Connect the battery negative.
8. Start and run the engine until the oil temperature achieves 85-100°C.
9. When the engine working condition achieves 1000 RPM, the reading of the oil pressure gauge is 200Kpa.
10. Stop the engine, and disconnect the battery negative.
11. Release the connector of the oil pressure gauge and take away the pressure gauge to remove the connector.
12. Wipe off the spilled oil.
13. Fit the oil pressure switch.

Oil Pressure Switch Refit

14. Check and refill engine oil.
15. Connect the battery negative.

Oil Strainer

Remove

1. Secure the vehicle on the lift.
2. Drain the engine oil.

Engine Oil Drain

3. Remove the oil pan.

Oil Pan Remove

4. Remove 1 bolt fixing the oil strainer to the oil strainer bracket.
5. Remove 1 bolt fixing the oil strainer bracket to the skirt rack, and remove the oil strainer bracket.
6. Remove 2 bolts fixing the oil strainer to the oil pump, and remove the oil strainer.

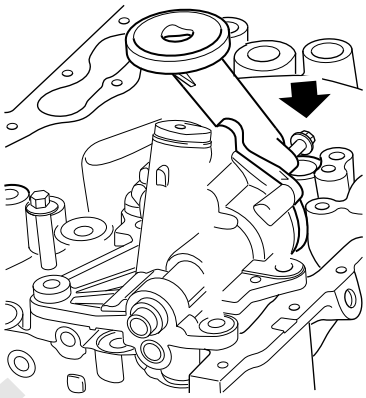

S1113563

Refit

1. Clean the oil strainer and oil pump inlet, and ensure there is no foreign material.
2. Fix the oil strainer to the oil pump, fit 2 bolts, tighten to **9–11Nm**, and check the torque.
3. Fix the oil strainer bracket to the skirt rack, fit 1 bolt, tighten to **13–17Nm**, and check the torque.
4. Fit 1 bolt fixing the oil strainer to the oil strainer bracket, tighten to **9–11Nm**, and check the torque.
5. Fit the oil pan.

Oil Pan Refit

6. Engine Oil

Engine Oil Refill

www.cargeek.ir

Oil Pan

Remove

1. Raise the vehicle on a lift.

Warning: Do not work on or under a vehicle supported only by a jack. Always support the vehicle on safety stands.

2. Drain the engine oil.

Engine Oil Drain

3. Remove the front exhaust pipe.

Front Exhaust Pipe Remove

4. Remove 3 bolts fixing the oil pan to the transmission.

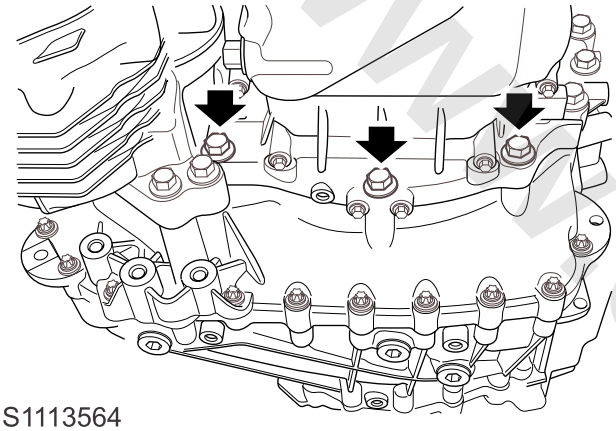

S1113564

5. Unscrew 1 bolt fixing the air conditioning compressor to the oil pan.
6. Remove 22 bolts fixing the oil pan to the engine skirt rack, and note the mounting position of the two longest bolts.

Refit

1. Clean the mating face between the engine skirt rack and the oil pan, and ensure there is no foreign material.
2. Apply sealant (2.5mm in width) to the surface of the oil pan component according to the route shown.

Caution: *Ensure the sealant applied is continuous, and complete the assembly within 5 minutes after application.*

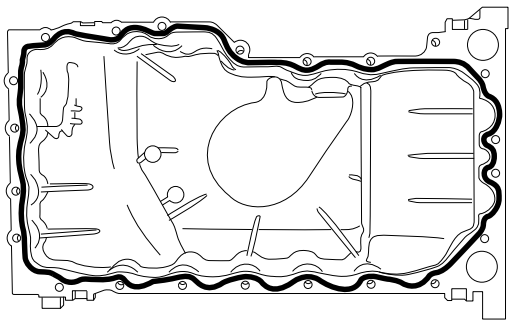

S1113566

3. Fit the oil pan to the skirt rack with the **TEN00127**, fit 20 bolts and pre-tighten the bolt.

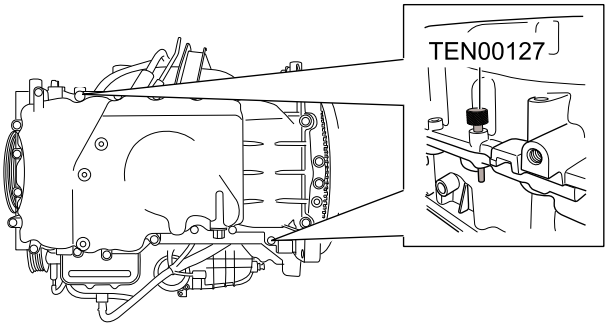

S1113562

4. Remove the oil pan locating tool (**TEN00127**).
5. Fit the other 2 bolts. Tighten all bolts to **8–12Nm** in the sequence shown and check the torque.

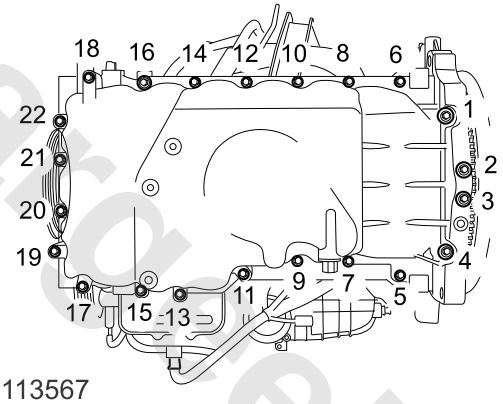

S1113567

6. Fit 1 bolt fixing the A/C compressor to the oil pan, tighten to **19–25Nm**, and check the torque.
7. Fit 4 bolts fixing the oil pan to the transmission, tighten them to **75–90Nm**, and check the torque.
8. Fit the front exhaust pipe.

Front Exhaust Pipe Refit

9. Lower the vehicle.
10. Refill engine oil.

Engine Oil Refill

www.cargeek.ir

Lower Crankcase

Remove

1. Remove the engine and dual clutch automatic transmission.

Engine and Dual Clutch Automatic Transmission Remove

2. Remove the engine timing chain.

Engine Timing Chain Remove

3. Remove the oil strainer.

Oil Strainer Remove

4. Remove the rear crankshaft oil seal.

Rear Crankshaft Oil Seal Remove

5. Remove 16 bolts fixing the lower crankcase to cylinder block in the sequence shown.

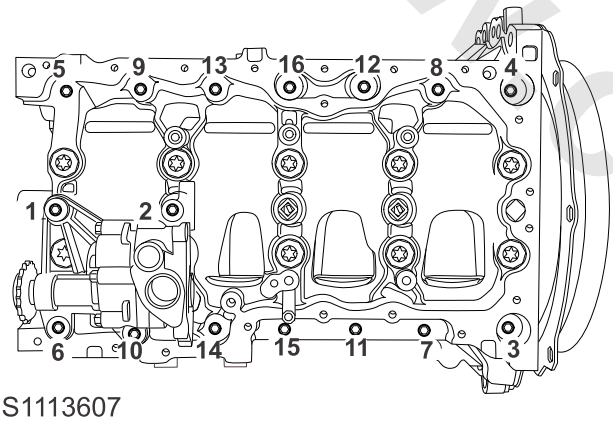

S1113607

6. Remove the oil pump and pipe connector - oil pump to lower crankcase.
7. Remove 10 main bearing bolts in the sequence shown and discard the bolt.

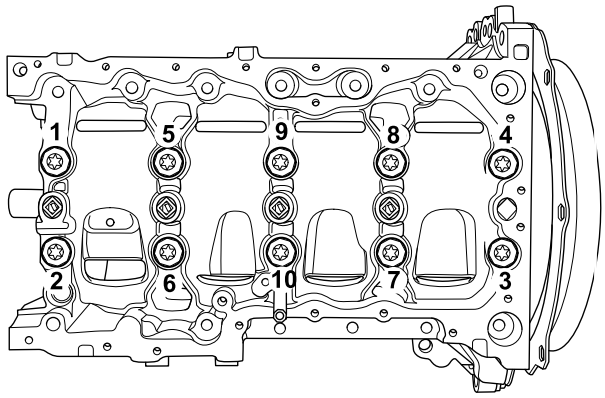

S1113608

8. Remove the lower crankcase, and remove the oil return pipe from the lower crankcase.

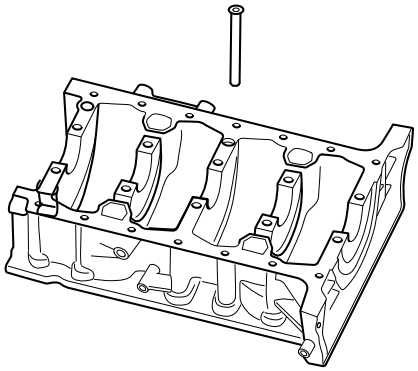

S1113609

9. Remove the crankshaft main bearing shell from the lower crankcase, and arrange it in order.

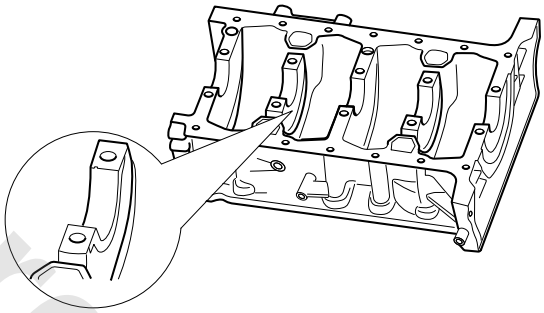

S1113524

Refit

1. Clean the mating face between the cylinder block and the lower crankcase, and ensure there is no foreign material.
2. Clean the oil circuit, water channel and ensure there is no foreign material.
3. Fit the crankshaft main bearing shell of the lower crankcase to the skirt rack in the original sequence.
4. Apply fresh engine oil to the crankshaft main journal.
5. Manually press the oil return pipe into the lower crankcase, when the exposed section is appr. 10mm, tap with a rubber hammer until the end of the pipe touches the bottom.
6. Apply sealant (3.5mm in width) evenly to the mating face between the lower crankcase and the cylinder block, see the figure.

www.cargeek.ir

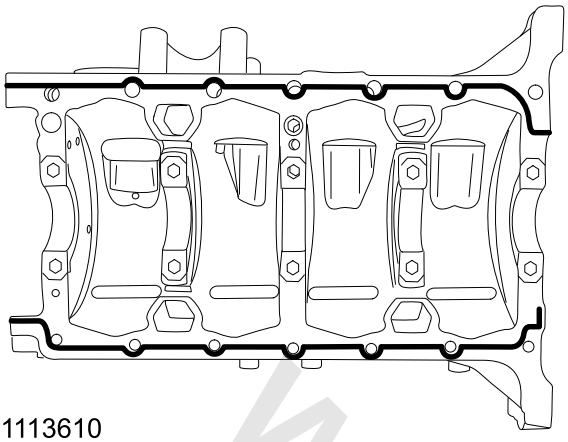

S1113610

7. Align the locating pin and secure the lower crankcase on the cylinder block.
8. Fit new bolt to the main bearing, tighten to **35Nm +90°+45°** in the sequence shown, and check the torque.

Caution: *After application of the sealant, tighten it to the specified torque within 15 minutes.*

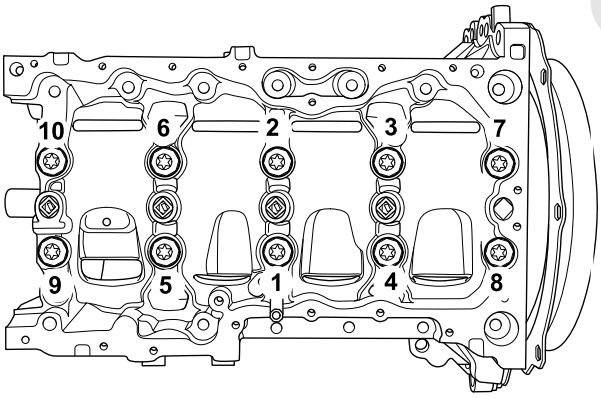

S1113611

9. Fit 12 bolts fixing the lower crankcase to the cylinder block, tighten to **23-27Nm** in the sequence of 1-12 and check the torque.

Caution: *After application of the sealant, tighten it to the specified torque within 15 minutes.*

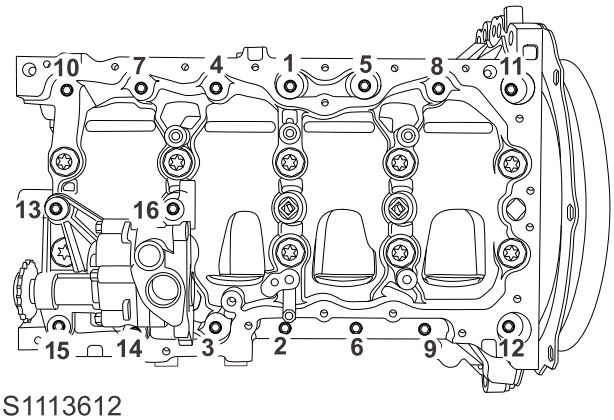

S1113612

10. Apply a little oil to the pipe connector - oil pump to skirt rack, and fit it into the oil inlet of the lower crankcase.
11. Fix the oil pump to the lower crankcase, fit 4 bolts, tighten to **23–27Nm** in the sequence of 13–16, and check the torque.
12. Fit the rear crankshaft oil seal.

Rear Crankshaft Oil Seal Refit

13. Fit the oil strainer.

Oil Strainer Refit

14. Fit the engine timing chain.

Engine Timing Chain Refit

15. Fit the engine and dual clutch automatic transmission.

Engine and Dual Clutch Automatic Transmission Refit

www.cargeek.ir

www.cargeek.ir

Front Timing Cover

Remove

1. Secure the vehicle on a lift.
2. Disconnect the battery negative.
3. Drain the engine coolant.

☞ **Coolant - Drain**

4. Drain the engine oil.

☞ **Engine Oil Drain**

5. Remove the auxiliary drive belt tensioner.

☞ **Auxiliary Drive Belt Tensioner Remove**

6. Remove the front crankshaft oil seal.

☞ **Front Crankshaft Oil Seal Remove**

7. Remove 2 bolts securing the thermostat housing bracket.
8. Release the clip, and remove the fuel pipe from the fuel pipe bracket.
9. Remove 1 bolt fixing the fuel pipe bracket to the engine, and remove the fuel pipe bracket.

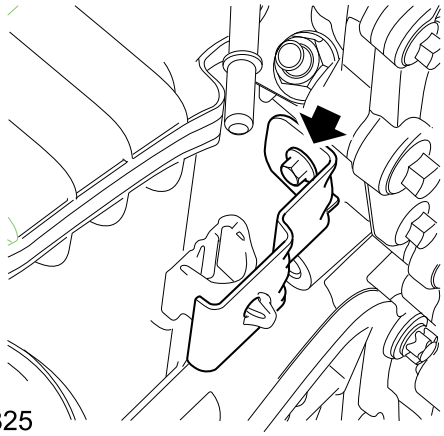

S1113825

10. Fit the **TEN00120** to the two sides of the engine, tighten the bolt to **22–28Nm** and check the torque.

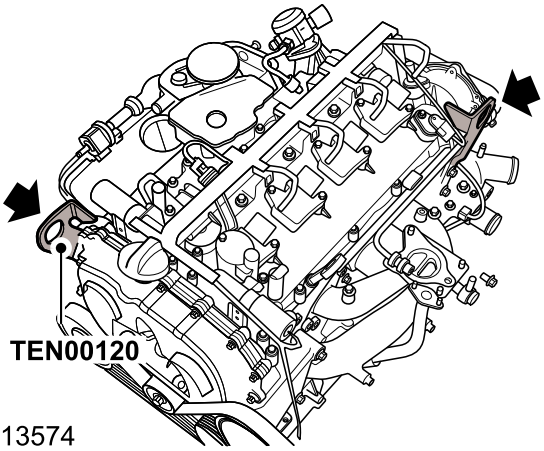

S1113574

11. Fix the engine with the **T10007** and **TEN00070**.

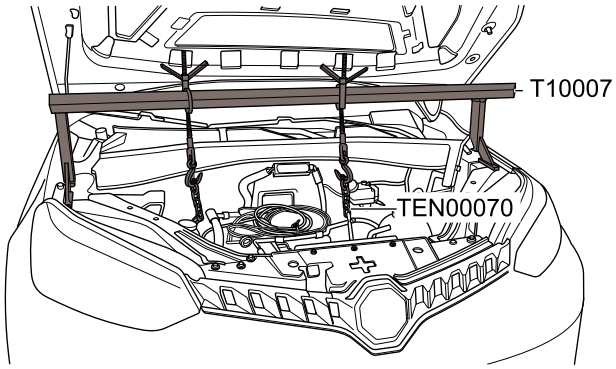

S1113568

12. Remove the engine suspension.

☞ **Engine Suspension Remove**

13. Fix the water pump pulley with the **TEN00009**.
14. Remove 4 bolts fixing the water pump pulley to the water pump, and remove water pump pulley.
15. Secure the PAS pump idler with the **TEN00009**.

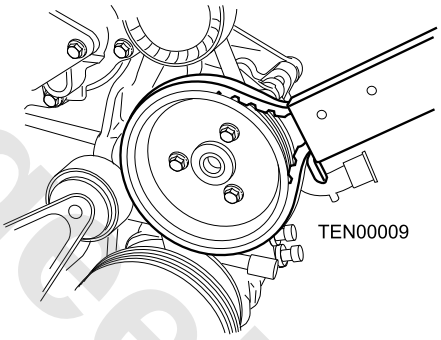

S111J423

16. Remove 3 bolts fixing the pulley to the PAS pump idler assembly and remove the pulley.
17. Remove 1 bolt fixing idler C to the cylinder block and remove idler C.
18. Remove 4 bolts connecting the oil pan and the timing chain cover.
19. Remove 23 M6 bolts, 2 M8 bolts, 3 M12 bolts and idler A fixing the front timing cover to the engine in the sequence of 7-29, 5-6, 4 and 1-3.

www.cargeek.ir

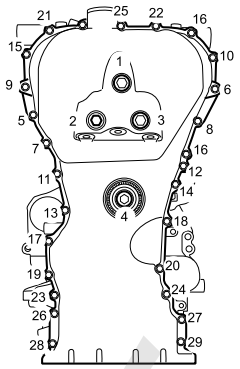

S1113569

20. Tap the rear to remove the front timing cover as per the position and sequence shown.

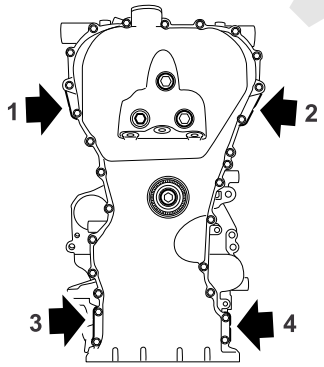

S1113570

Refit

1. Clean the engine cylinder block, oil pan and mating face of the timing chain cover, and ensure there is no foreign material.
2. Apply sealant (2.5mm in width) to the surface of the timing chain cover component according to the route shown.

Caution: *Ensure the sealant applied is continuous, and complete the assembly within 5 minutes after application.*

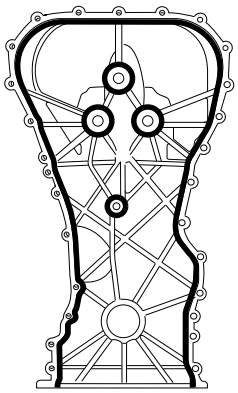

S1113571

3. Apply sealant (2.5mm in width) to the mating face of the oil pan.
4. Align the two locating pin holes of the timing chain cover with the two locating pins, and fit them to the mating face between the engine skirt rack and the cylinder head assembly.
5. Fit 23 M6 bolts, 2 M8 bolts, 3 M12 bolts and idler A.

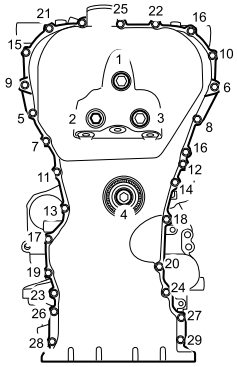

S1113569

6. Tighten 3 M12 bolts to **80–90Nm** in the sequence of 1-3, and check the torque.
7. Tighten idler A to **32–38Nm** in the sequence of 4, and check the torque.
8. Tighten 2 M8 bolts to **23–27Nm** in the sequence of 5-6, and check the torque.
9. Tighten 23 M6 bolts to **9-11Nm** in the sequence of 7-29, and check the torque.
10. Fit 4 bolts connecting the oil pan and the front timing cover, tighten to **9-11Nm** and check the torque.
11. Fix the idler C to the cylinder block, fit 1 bolt, tighten to **45–55Nm**, and check the torque.
12. Fix the PAS pump pulley to the EPAS idler assembly, fit 3 bolts, tighten to **9–11Nm** and check the torque.
13. Secure the water pump pulley on the water pump, fit 4 bolts and tighten them to **7.5–10.4Nm**, and check the torque.
14. Fit the engine suspension.

Engine Suspension Refit

15. Remove the **T10007** and **TEN00070**.
16. Remove the **TEN00120**.
17. Fix the fuel pipe bracket to the engine, fit 1 bolt, tighten to **19–25Nm**, and check the torque.
18. Fit the fuel pipe clip into the fuel pipe bracket, and ensure it is properly located.
19. Fit the thermostat housing bracket, tighten the 2 bolts to **22-28Nm** and check the torque.
20. Fit the front crankshaft oil seal.

Front Crankshaft Oil Seal Refit

www.cargeek.ir

www.cargeek.ir

21. Fit the auxiliary drive belt tensioner.

☞ **Auxiliary Drive Belt Tensioner Refit**

22. Refill engine oil.

☞ **Engine Oil Refill**

23. Refill the engine coolant.

☞ **Coolant - Refill**

24. Connect the battery negative.

Engine Timing Chain

Remove

1. Secure the vehicle on a lift.
2. Disconnect the battery negative.
3. Drain the engine oil.

☞ **Engine Oil Drain**

4. Remove the auxiliary drive belt.

☞ **Auxiliary Drive Belt Remove**

5. Remove the timing chain cover.

☞ **Timing Chain Cover Remove**

6. With an appropriate tool, lock the timing chain tensioner, remove 2 bolts fixing the timing chain tensioner to the cylinder block, and remove the timing chain tensioner.

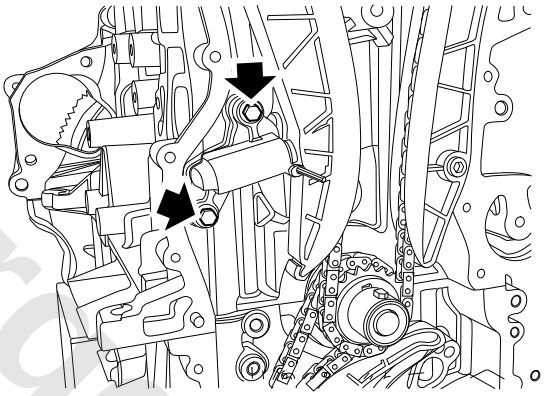

S1113600

7. Remove the tensioner rail from the chain guide rail bolt.

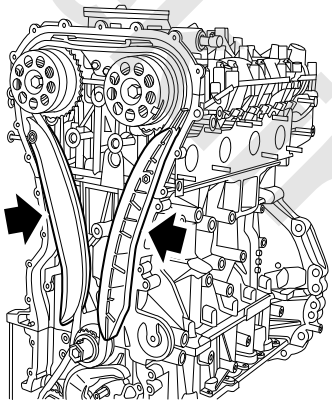

S1113601

8. Remove the chain guide rail and timing chain together.

www.cargeek.ir

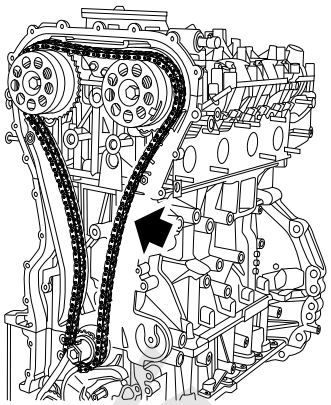

S1113602

9. Remove 2 bolts fixing the upper guide rail to the cylinder head, and remove the upper guide rail.

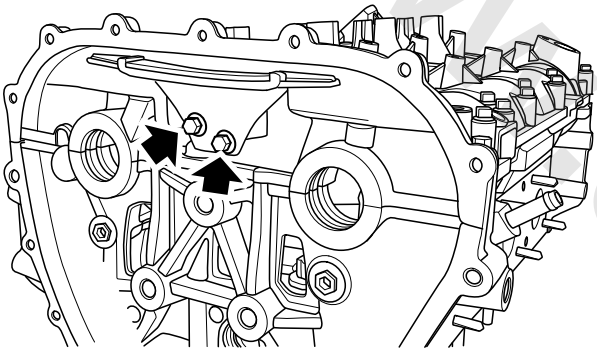

S1113596

10. Remove the phase modulator.

Phase Modulator Remove

11. Remove the mechanical vacuum pump.

Mechanical Vacuum Pump Remove

12. Remove 3 bolts (1) fixing the observation hole cover of the intake camshaft to the camshaft cover, and remove the observation hole cover of the intake camshaft.

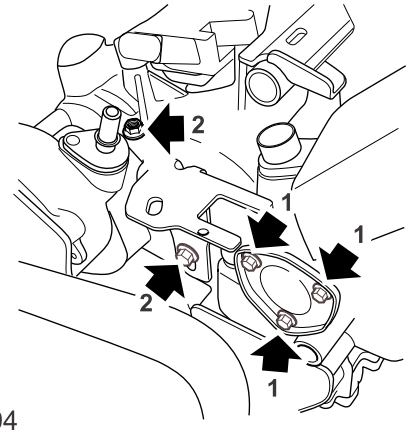

S1113594

13. Remove 3 bolts of the chain guide rail from the cylinder head (cylinder block).
14. Remove the crankshaft timing sprocket.
15. Remove the bolt (1) of the oil pump chain tensioner.
16. Remove the oil pump chain tensioner.
17. Remove the bolt (2) of the oil pump chain tensioner.

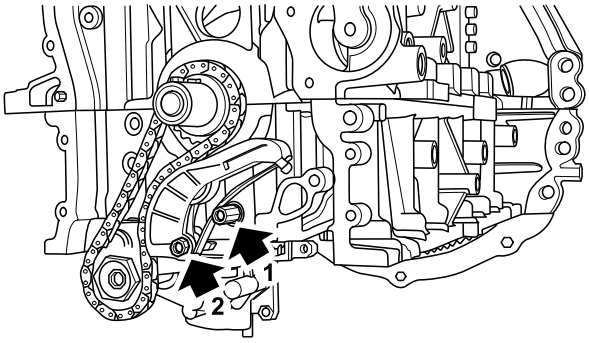

S11113603

18. Remove the oil pump chain.

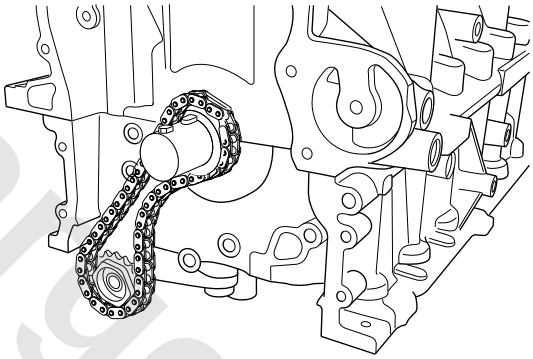

S1113604

19. Remove the oil pump sprocket.
20. Remove the flat key - sprocket.

Refit

1. Rotate the crankshaft and allow the crankshaft to be located at 90° CA before the acting TDC of cylinder 1, and secure the crankshaft with the **TEN00122**.
2. Turn the camshaft and fit the camshaft timing tool of the **TEN00124** into the tail groove of the intake/exhaust camshafts.

www.cargeek.ir

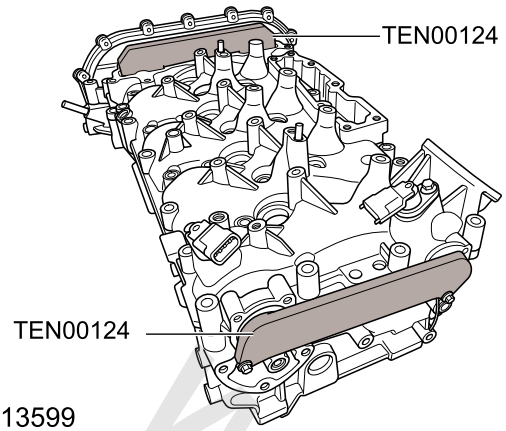

S1113599

3. Check the key slot and flat key of the crankshaft assembly -sprocket, and ensure it is clean and free from burrs.
4. Press the flat key into the key slot until it touches the bottom of the key slot, and then the top of the key shall be 2.5mm above the surface.
5. Fit the drive sprocket to the crankshaft.
6. Fit the oil pump chain.
7. Fix the bolt (2) of the oil pump chain tensioner to the skirt rack, tighten to **20–24Nm** and check the torque.
8. Fit the oil pump chain tensioner.
9. Pull the oil pump chain tensioner, fix the bolt (1) of the oil pump chain tensioner to the skirt rack, tighten to **20–24Nm** and check the torque.
10. Fit the intake/exhaust phase modulator.

Phase Modulator Refit

11. Fix the upper guide rail to the cylinder head, fit 2 bolts, tighten to **9–11Nm**, and check the torque.
12. Fit the 3 bolts of the chain guide rail to the cylinder head, tighten to **20-24Nm** and check the torque.
13. Fit the timing chain to crankshaft sprocket, then fit the crankshaft sprocket into the front end of the crankshaft (no need to push it to the end.).
14. Fit the timing chain and chain guide rail into the chain guide rail bolt, and push them to the end.
15. Fit the timing chain into the two phase modulators.
16. Fit the tensioner rail into the chain guide rail bolt and push it to the end.
17. Fix the timing chain tensioner to the cylinder block, fit 2 bolts, tighten to **9–11Nm**, and check the torque.
18. Adjust the timing chain and push the crankshaft sprocket to the end.
19. Pull out the pin securing the timing chain tensioner.

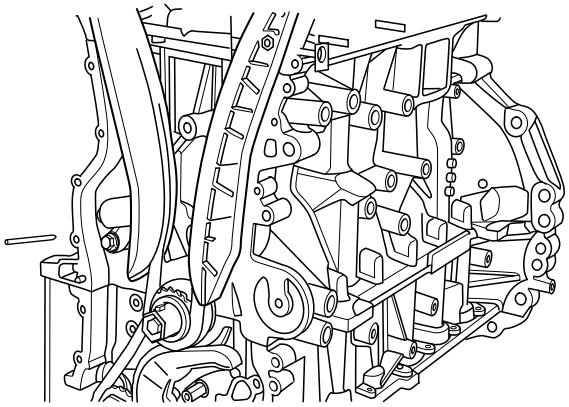

S1113605

20. Check the camshaft timing and the corresponding reading according to the specification table.
21. Remove **TEN00122**, **TEN00124**.
22. Apply glue to the observation hole cover of the intake camshaft according to the method shown.

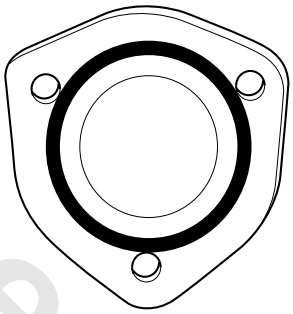

S1113598

23. Fix the observation hole cover of the intake camshaft to the camshaft cover, fit 3 bolts, tighten to **5–7Nm** and check the torque.
24. Fit the mechanical vacuum pump.

Mechanical Vacuum Pump Refit

25. Fit the timing chain cover.

Timing Chain Cover Refit

26. Fit the auxiliary drive belt.

Auxiliary Drive Belt Refit

27. Refill engine oil.

Engine Oil Refill

28. Connect the battery negative.
29. Turn the ignition switch to ON position. Connect **VDS** and execute" ECM Adaption Reset " .
30. Wait the 2-5 seconds, turn off the ignition switch, then restart the vehicle .

www.cargeek.ir

Crankshaft Torsional Vibration Damper

Remove

1. Secure the vehicle on the lift.
2. Remove the auxiliary drive belt.

Auxiliary Drive Belt Remove

3. Secure the flywheel with the **TEN00122** to restrict rotation of the crankshaft.
4. Remove the bolt securing the crankshaft torsional vibration damper and discard the bolt and gasket.

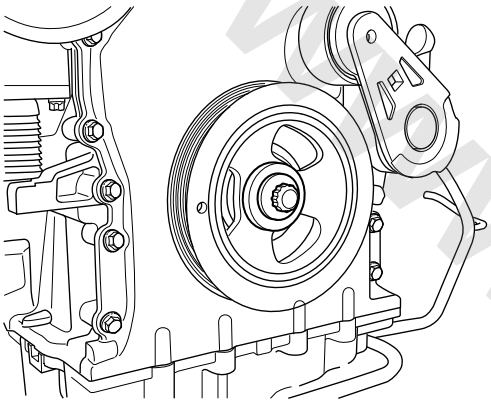

S1113572

5. Remove the crankshaft torsional vibration damper.

Caution: *When removing the crankshaft torsional vibration damper, do not damage the lip of the front crankshaft oil seal.*

6. Remove the flat key from the crankshaft - torsional vibration damper.

Refit

1. Check the flat key - crankshaft torsional vibration damper and key slot of the crankshaft assembly, and ensure it is clean and free from burrs.
2. Press the flat key into the key slot until it touches the bottom of the key slot, and then the top of the key shall be 2.5mm above the surface.
3. Note the mounting position of the crankshaft flat key, align the hub groove of the crankshaft torsional vibration damper with the crankshaft key, and carefully fit the crankshaft torsional vibration damper to the front of the crankshaft.
4. Fit new bolt, tighten to **85Nm+90°** and check the torque.
5. Remove the **TEN00122**.
6. Fit the auxiliary drive belt.

Auxiliary Drive Belt Refit

Right Hydraulic Engine Suspension

Remove

1. Disconnect the battery negative.
2. Remove the air filter assembly.

Air Filter Assembly Remove

3. Remove 2 bolts securing the thermostat housing bracket.
4. Release the clip, and remove the fuel pipe from the fuel pipe bracket.
5. Remove 1 bolt fixing the fuel pipe bracket to the engine, and remove the fuel pipe bracket.

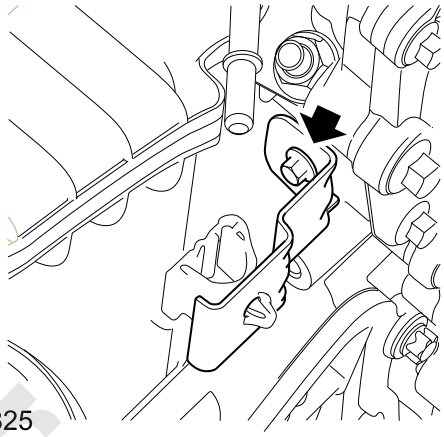

S1113825

6. Fit the **TEN00120** to the two sides of the engine, tighten the bolt to **22–28Nm** and check the torque.

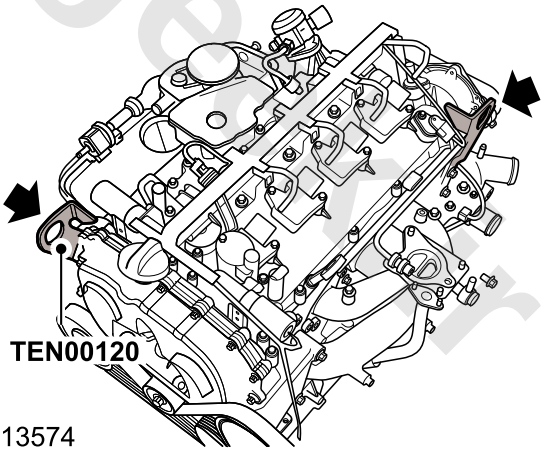

S1113574

7. Fix the the power assembly with the **T10007** and **TEN00070**.

www.cargeek.ir

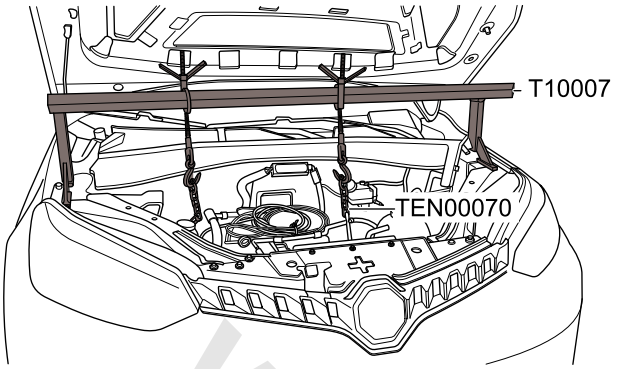

S1113568

8. Remove 2 bolts (1) fixing the engine suspension bracket to the front wheel house panel and engine suspension.
9. Remove 3 bolts (2) fixing the engine suspension to the engine.
10. Remove 2 bolts (3) fixing the engine suspension to the front longitudinal beam and remove the engine suspension.

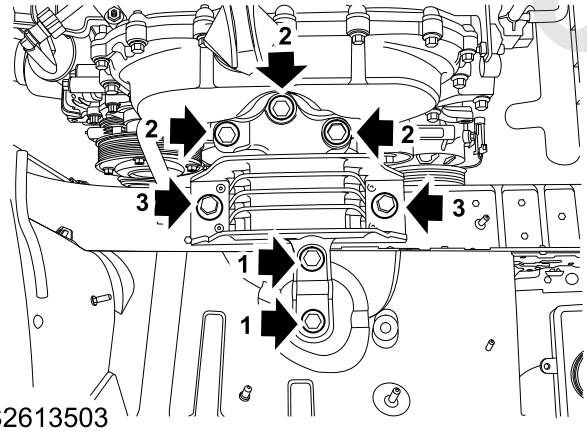

S2613503

Refit

1. Fit the engine suspension to the front longitudinal beam, fit 2 bolts, tighten to **90–110Nm** and check the torque.
2. Fit the engine suspension to the engine, fit 3 bolts, tighten to **50Nm+90°** and check the torque.
3. Fix the engine suspension bracket to the front wheel house panel and engine suspension, fit 2 bolts, tighten to **55–65Nm** and check the torque.
4. Remove the **T10007** and **TEN00070**.
5. Remove the **TEN00120** from the engine.
6. Fix the fuel pipe bracket to the engine, fit 1 bolt, tighten to **19–25Nm**, and check the torque.
7. Fit the fuel pipe clip into the fuel pipe bracket, and ensure it is properly located.
8. Fit the thermostat housing bracket, tighten the 2 bolts to **22-28Nm** and check the torque.
9. Fit the air filter assembly.

Air Filter Assembly Refit

10. Connect the battery negative.

www.cargeek.ir

Engine and Dual Clutch Automatic Transmission

Remove

1. Secure the vehicle on the lift.
2. Remove the battery bracket.

Battery Bracket Remove

3. Recover the air conditioning refrigerant.

A/C Refrigerant Recovery

4. Drain the engine coolant.

Engine Coolant Drain

5. Drain the dual clutch automatic automatic transmission fluid.

Dual Clutch Automatic Transmission Fluid Drain

6. Drain the engine oil.

Engine Oil Drain

7. Remove the air filter assembly.

Air Filter Assembly Remove

8. Remove overflow pipe A.

Overflow Pipe A Remove

9. Release the fuel pressure.

Fuel System Pressure Relief

Warning: Fuel vapour is highly flammable and in confined spaces is also explosive and toxic. Always have a fire extinguisher containing foam, CO2, gas or powder close

10. Disconnect the fuel inlet hose from the low-pressure fuel pipe.

Caution: Always fit plugs to open connections to prevent contamination.

11. Loosen the clamps, and disconnect the hose of the activated carbon canister solenoid valve.
12. Loosen the clamps, and disconnect the throttle intake pipe from the intercooler - intercooler hose (3).
13. Loosen the clamps and disconnect the intercooler inlet pipe from the intercooler.
14. Disconnect the vacuum pipe from the vacuum pump.

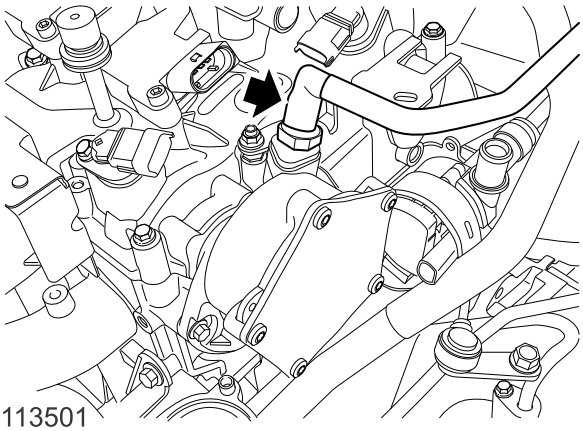

S1113501

15. Disconnect the engine ECM connector.
16. Disconnect the connector of the engine harness and body harness.
17. Remove the engine harness ground.
18. Loosen the clamp, disconnect the coolant hose from the thermostat housing, and take away the hose.

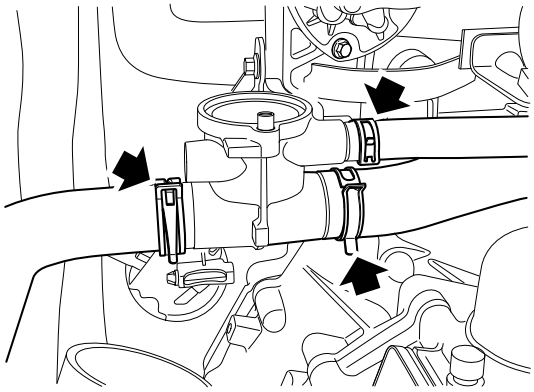

S1113506

19. Remove 1 bolt fixing the oil cooler pipe clip to the automatic transmission and remove the pipe clip.
20. Remove the bolt connecting the oil cooler pipe to the automatic transmission, disconnect the pipe from the automatic transmission and discard the seal ring.

Caution: Always fit plugs to open connections to prevent contamination.

21. Remove 2 bolts securing the thermostat housing bracket.
22. Release the clip, and remove the fuel pipe from the fuel pipe bracket.
23. Remove 1 bolt fixing the fuel pipe bracket to the engine, and remove the fuel pipe bracket.

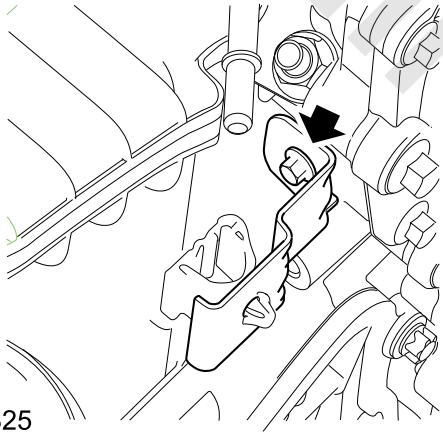

S1113825

24. Fit the **TEN00120** to the two sides of the engine, tighten the bolt to **22–28Nm** and check the torque.

www.cargeek.ir

www.cargeek.ir

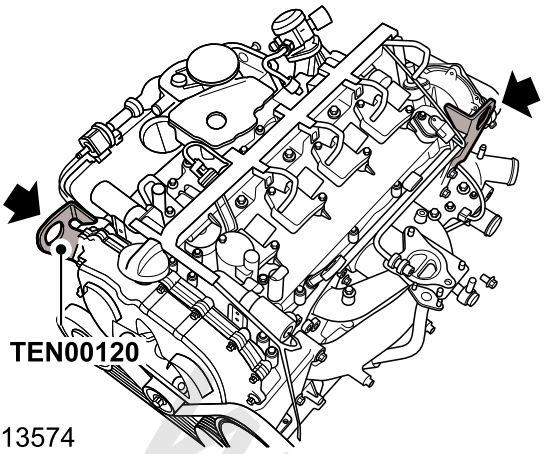

S1113574

25. Fix the engine with the **T10007** and **TEN00070**.
26. Raise the vehicle on a lift.
27. Disconnect the harness from the dual clutch automatic transmission and take away the harness.
28. Remove 2 nuts (3) fixing the air conditioning pipe to the compressor and release the air conditioning pipe from the compressor.

Caution: Always fit plugs to open connections to prevent contamination.

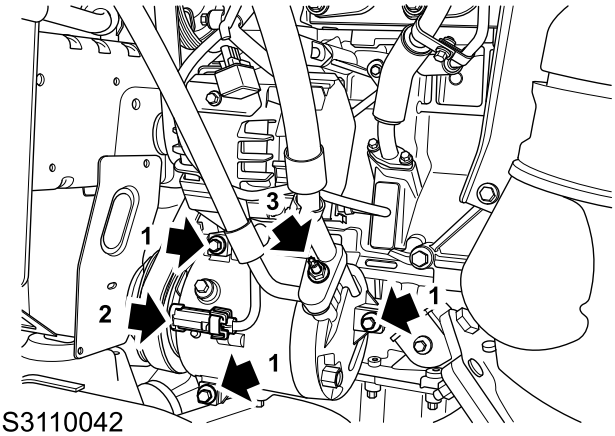

S3110042

29. Release the clamp, and disconnect cooling hose from the oil filter module.
30. Remove the nut, disconnect the battery wire from the starter motor and remove the battery wire.

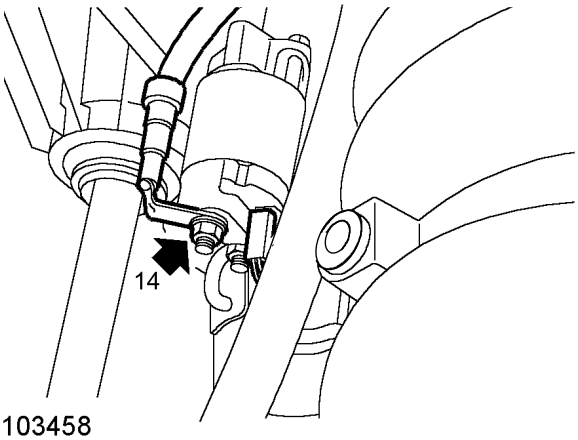

S103458

31. Place the shift lever in "P" gear.
32. Disconnect the cable ball joint at the transmission side from the parking brake cable rocker arm.
33. Release the C-clip from the parking cable bracket, and release the cable support.

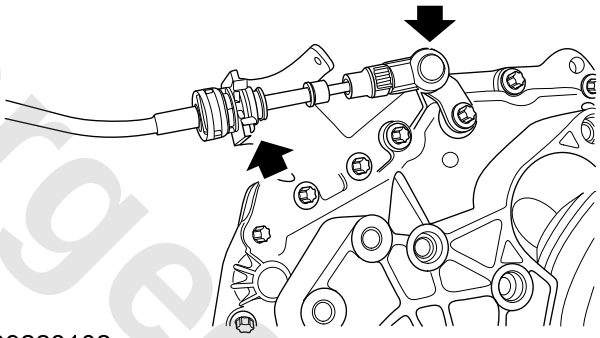

S9223102

34. Remove the front subframe.

☞**Front Subframe Remove**

35. Lower the vehicle.
36. Remove the right hydraulic engine suspension.

☞**Right Hydraulic Engine Suspension Remove**

37. Remove 2 bolts and 1 nut fixing the transmission suspension to the transmission suspension bracket.

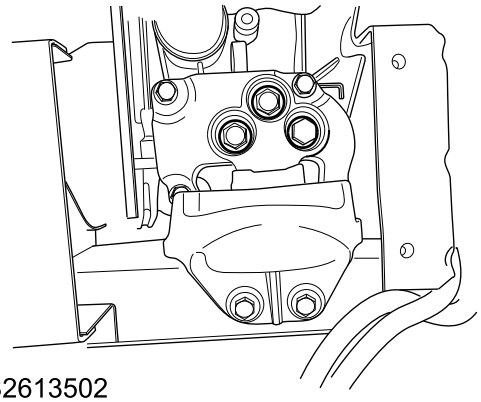

S2613502

www.cargeek.ir

38. Support the engine and dual clutch automatic transmission with the hydraulic bracket.
39. Remove the **T10007** and **TEN00070**.
40. Lift the vehicle, and remove the engine and dual clutch automatic transmission.

Refit

1. Support the engine and dual clutch automatic transmission with the hydraulic bracket.
2. Lower the vehicle, with assistance, put the engine and dual clutch automatic transmission on the mounting position of the engine compartment.
3. Fit the **T10007** and **TEN00070**.
4. Fix the transmission suspension to the transmission suspension bracket, fit 2 bolts, tighten to , fit 1 nut, tighten to **90–110Nm**, and check the torque.
5. Fit the right engine suspension.

Right Hydraulic Engine Suspension Refit

6. Lift the vehicle and take away the hydraulic bracket.
7. Fit the front subframe.

Front Subframe Refit

8. Ensure that the shift lever is in "P" gear.
9. Turn the shift rocker arm to the "P" mark on the transmission housing, and ensure the shift rocker arm is in "P" gear.
10. Fix the parking cable to the knob of the shift rocker arm.
11. Connect the battery wire to the starter motor.
12. Use a new O ring, connect the A/C pipe to the A/C compressor, fit the nut, tighten to **19-25Nm** and check the torque.
13. Connect the engine compartment harness to the connector of the dual clutch automatic transmission.
14. Lower the vehicle.
15. Remove the **T10007** and **TEN00070**.
16. Remove the plug, fit a new seal to the oil cooler pipe, and apply clean automatic transmission fluid to it.
17. Secure the oil cooler pipe to the automatic transmission, fit 1 bolt respectively, tighten them to **7–10Nm**, and check the torque.
18. Secure the oil cooler pipe clip to the automatic transmission, fit 1 bolt, tighten to **7–10Nm**, and check the torque.
19. Connect the coolant hose to the thermostat housing, and fix it with clamps.
20. Fit the engine harness ground.
21. Fit the connector of the engine harness and body harness.
22. Connect the engine ECM connector.
23. Connect the vacuum pipe of the mechanical vacuum pump.
24. Fit the intercooler inlet pipe to the intercooler, and fix it with clamps.
25. Fit the throttle intake pipe to the intercooler, and fix it with clamps.
26. Connect the fuel breather hose to the activated carbon canister solenoid valve and secure with clamps.
27. Connect the fuel inlet pipe to the low-pressure fuel line.
28. Remove the **TEN00120**.
29. Fix the fuel pipe bracket to the engine, fit 1 bolt, tighten to **19–25Nm**, and check the torque.
30. Fit the fuel pipe clip into the fuel pipe bracket, and ensure it is properly located.
31. Fit the thermostat housing bracket, tighten the 2 bolts to **22-28Nm** and check the torque.
32. Fit overflow pipe A.

Overflow Pipe A Refit

33. Fit the air filter assembly.

Air Filter Assembly Refit

34. Refill engine oil.

Engine Oil Refill

35. Refill the dual clutch automatic transmission fluid.

Dual Clutch Automatic Transmission Fluid Refill

36. Refill the engine coolant.

Engine Coolant Refill

37. Refill A/C refrigerant.

A/C Refrigerant Refill

38. Fit the battery bracket.

Battery Bracket Refit

39. Lower the vehicle with the lift.

www.cargeek.ir

Cylinder Gasket

Remove

1. Disconnect the battery negative.
2. Drain the engine cooling system.

Coolant - Drain

3. Drain the engine oil.

Engine Oil Drain

4. Remove the engine timing chain.

Engine Timing Chain Remove

5. Remove the intake/exhaust camshafts.

Intake/Exhaust Camshaft Remove

6. Remove the turbocharger.

Turbocharger Remove

7. Remove the canister solenoid.

Canister Solenoid Remove

8. Disconnect the connector of the electronic throttle.

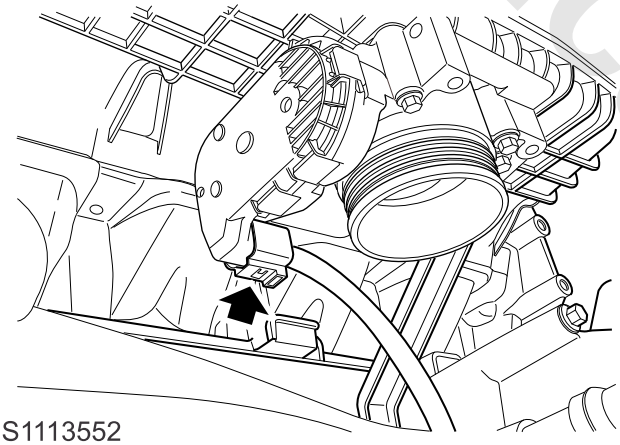

S1113552

9. Loosen the clamps and disconnect the throttle intake pipe from the throttle.

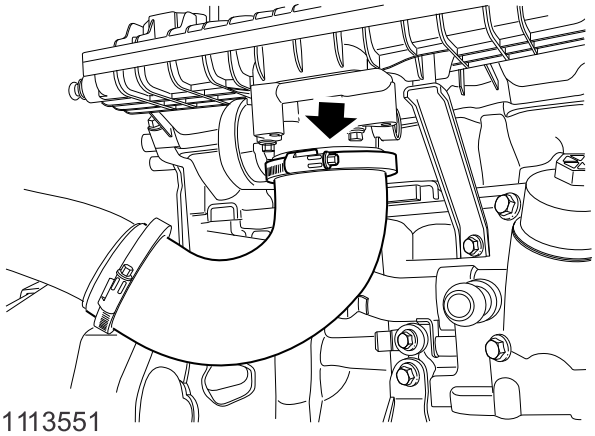

S1113551

10. Remove 1 bolt fixing the intake manifold bracket to the intake manifold.

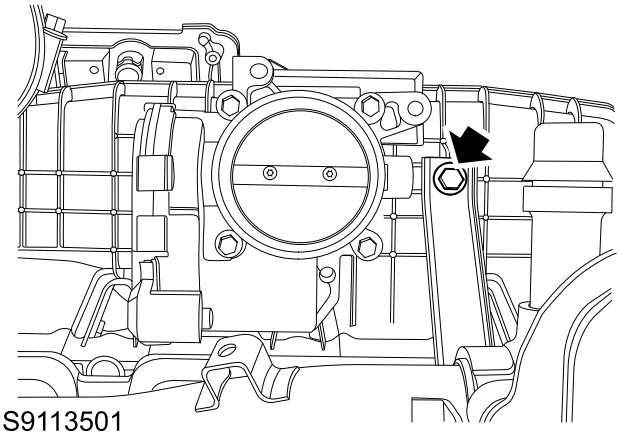

S9113501

11. Disconnect the intake air temperature/manifold absolute pressure sensors, and take away the harness.

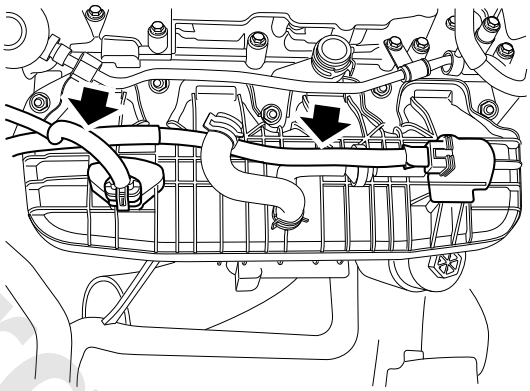

S1113549

12. Hold the red anti-looseness part to the right, until the red anti-looseness part fits the right part, and remove the vacuum pipe (1).
13. Release the clamp and remove the two vacuum hose (2) from the intake manifold.

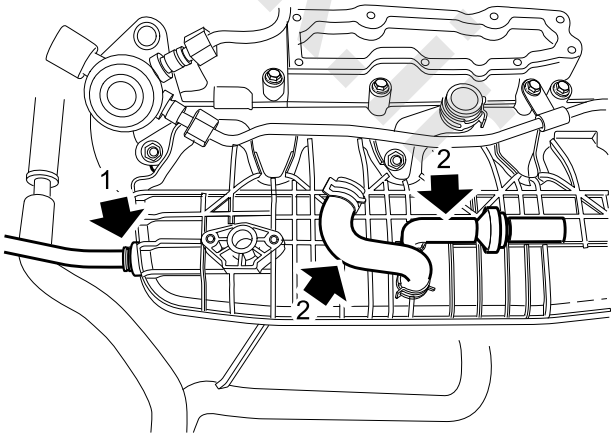

S1113550

14. Remove 3 bolts fixing the E-PAS idler assembly support to cylinder head, and remove the support and E-PAS idler assembly.
15. Remove 2 bolts fixing the electronic water pump bracket to the cylinder head, and remove the electronic water pump and bracket.

www.cargeek.ir

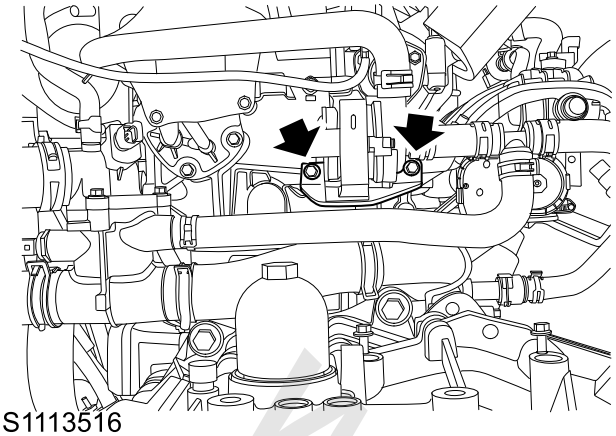

S1113516

16. Support the bottom of the engine with a bracket.
17. Remove the **T10007** and **TEN00070**.

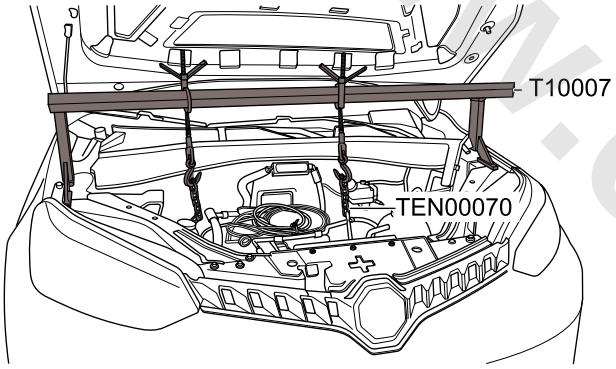

S1113568

18. Remove and discard 10 bolts fixing the cylinder head to the cylinder block, and remove the cylinder head.

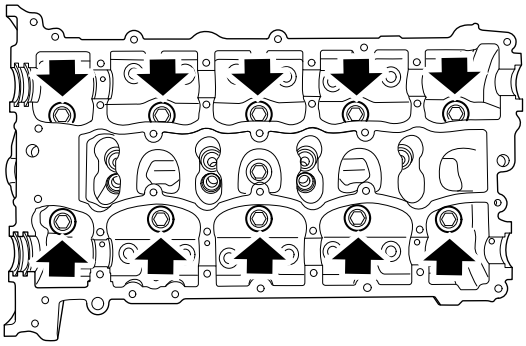

S1113575

19. Remove the cylinder head gasket from the cylinder block and discard the gasket.

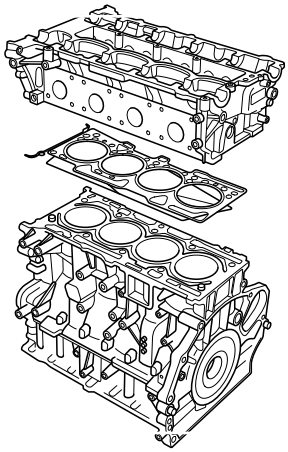

S1113576

Refit

1. Clean the joint face of the cylinder head and cylinder block and ensure it is free of foreign material.
2. Clean the passages of the engine oil and coolant.
3. Apply a thin oil film on the threads and the underside of the new bolt head of the cylinder head.
4. Check the surface of the cylinder head for scratch.
5. Fit new cylinder gasket onto the cylinder block and note the "UP" mark.
6. With assistance, fit the cylinder head to the cylinder block and carefully align it with the locating pins.
7. Carefully fit the cylinder head bolts, do not apply much force to plug it or drop it into the bolt holes, and tighten the bolt by hands.
8. Tighten cylinder head bolt to **45Nm+90°+90°** progressively in the sequence shown and check the torque.

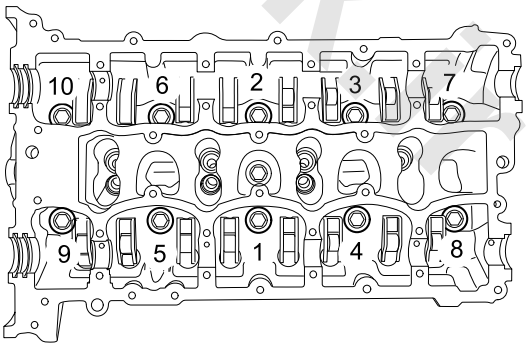

S1113577

9. Fix the electronic water pump bracket to the cylinder head, fit 2 bolts, tighten to **9–11Nm**, and check the torque.
10. Fix the E-PAS idler assembly support to the cylinder head, fit 3 bolts, tighten to and check the torque.
11. Fix the intake manifold bracket to the intake manifold, fit 1 bolt, tighten to **22–28Nm** and check the torque.

www.cargeek.ir

12. Connect throttle intake pipe to the throttle and secure with clamps.
13. Connect the electronic throttle connector.
14. Connect the two vacuum hoses to the intake manifold, and fix it with clamps.
15. Insert the vacuum hose into the red anti-looseness part, until the step surface of the vacuum hose fits into the red anti-looseness part.
16. Connect the connector of the intake air temperature and manifold absolute pressure, and reset the harness.
17. Fit the canister solenoid.

Canister Solenoid Refit

18. Fix the engine with the **TI0007** and **TEN00070**.
19. Take away the bottom bracket.
20. Fit the intake/exhaust camshafts.

Intake/Exhaust Camshaft Refit

21. Fit the engine timing chain.

Engine Timing Chain Refit

22. Refill engine oil.

Engine Oil Refill

23. Refill the engine cooling system.

Coolant - Refill

24. Connect the battery negative.

Turbocharger

Remove

1. Disconnect the battery negative.
2. Drain the cooling system.

Coolant - Drain

3. Drain the engine oil.

Engine Oil Drain

4. Remove the three-way catalytic converter assembly.

Three-way Catalytic Converter Remove

5. Remove 2 bolts fixing the turbocharger bracket to the cylinder block and turbocharger, and remove the bracket.
6. Disconnect the pressure control hose (1), seal the opening and ensure there is no foreign material in the turbocharger.
7. Disconnect the connector (2) of the turbocharger.
8. Release the clamp, disconnect the turbocharger air inlet hose from the turbocharger, seal the opening and ensure there is no foreign material in the turbocharger.
9. Release the clamp, disconnect the intercooler air inlet hose (4) from the turbocharger, seal the opening and ensure there is no foreign material in the turbocharger.

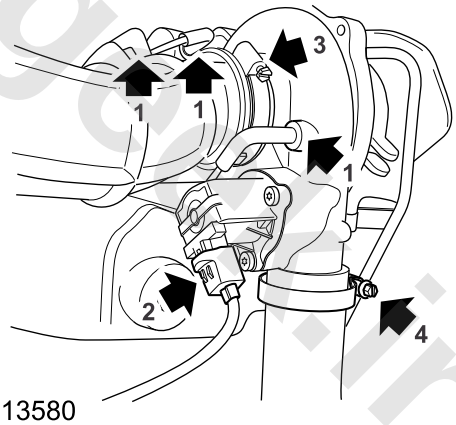

S1113580

10. Remove overflow pipe A.

Overflow Pipe A Remove

11. Remove the remaining 4 bolts fixing the heat shield of the cylinder head to the heat shield bracket and remove the heat shield.

www.cargeek.ir

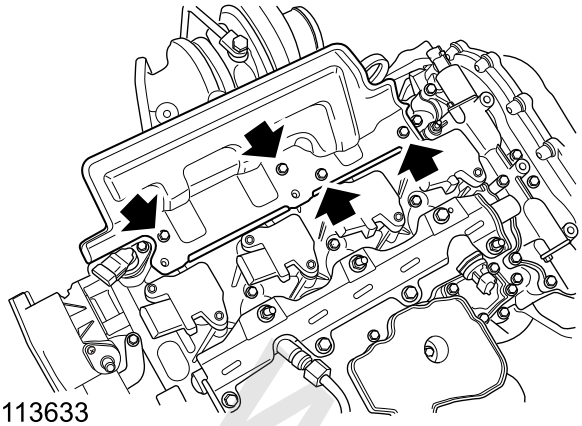

S1113633

12. Remove and discard the hollow bolt fixing the turbocharger coolant/water inlet pipe to the turbocharger, and take away and discard the two copper washers.

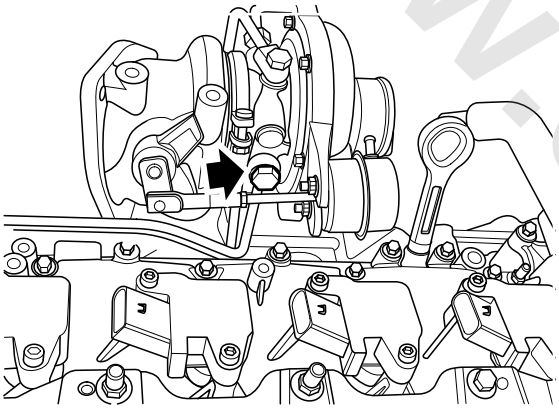

S1113581

13. Remove 1 nut (1) fixing the turbocharger coolant/water inlet pipe clamp to the stud of the camshaft cover.

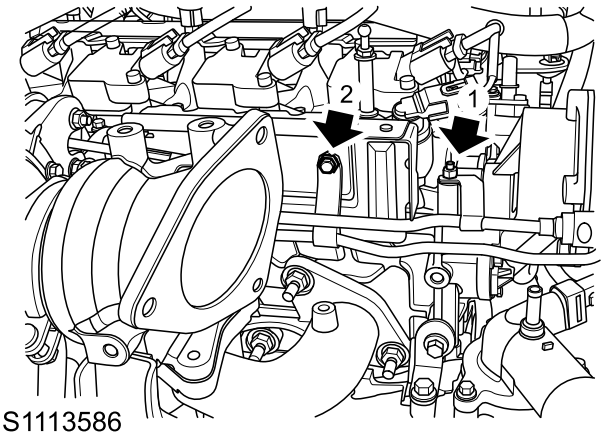

S1113586

14. Release the clamp, and disconnect the turbocharger water inlet pipe from the electronic water pump outlet pipe, and take away the turbocharger water inlet pipe.
15. Remove and discard the hollow bolt (1) fixing the turbocharger coolant/water outlet pipe to the turbocharger, and take away and discard the two copper washers.
16. Remove 1 bolt (2) fixing the turbocharger coolant/water outlet pipe clamp to the heat shield bracket.
17. Release the clamp, disconnect the turbocharger water return hard pipe and turbocharger water return hose connector, and take away the turbocharger water outlet pipe.
18. Remove and discard the hollow bolt (2) fixing the turbocharger oil inlet pipe to the turbocharger, and take away and discard the two copper washers.

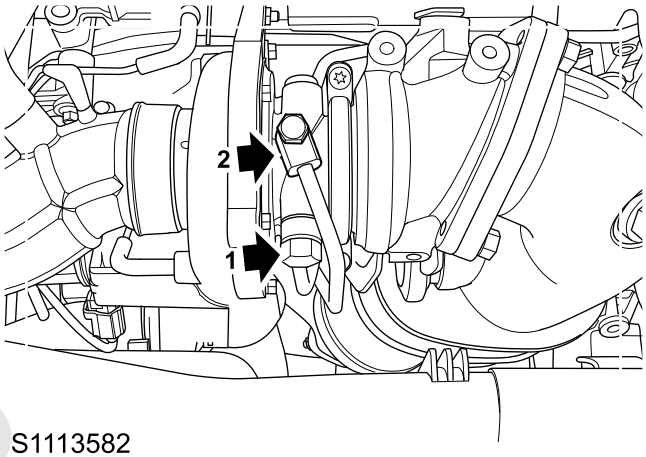

S1113582

19. Remove 1 bolt (2) fixing the turbocharger oil inlet pipe to the turbocharger oil return clamp, and take away the turbocharger oil inlet pipe.
20. Remove 1 bolt (1) fixing the turbocharger oil return pipe clamp to the exhaust manifold.
21. Remove 2 bolts fixing the turbocharger oil return pipe to the turbocharger, and remove the turbocharger oil return pipe.
22. Remove and discard 4 nuts fixing the turbocharger to the exhaust manifold, remove the turbocharger and discard the gasket.

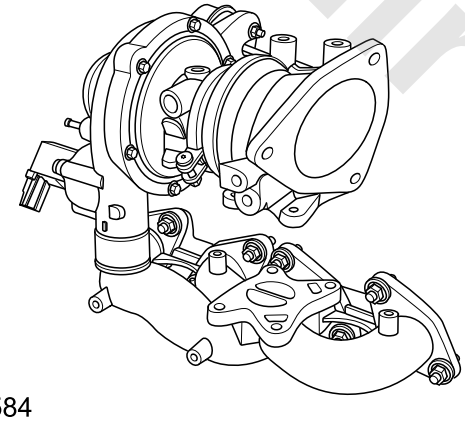

S1113584

23. Remove the 3 studs on the turbocharger.

Refit

1. Apply high temperature antiwelding agent to the 3 new studs, fit the stud to the turbocharger, tighten to **8–12Nm** and check the torque.

www.cargeek.ir

2. Use a new gasket, locate the turbocharger to the exhaust manifold, fit the new nut with high temperature antiwelding agent, tighten to **28–32Nm** and check the torque.
3. Fix the turbocharger oil return pipe to the turbocharger, fit 2 bolts, tighten to **9–11Nm**, and check the torque.
4. Fix the turbocharger oil return pipe bracket to the exhaust manifold, fit 1 bolt, tighten to **22-28Nm**, and check the torque.
5. Fix the turbocharger oil inlet pipe to the turbocharger oil return pipe clamp, fit 1 bolt, tighten to **9–11Nm**, and check the torque.
6. Fit a new gasket, fix the turbocharger oil inlet pipe to the turbocharger, fit 1 new hollow bolt, tighten to **18–22Nm**, and check the torque.
7. Connect the turbocharger coolant/water outlet pipe to the expansion tank outlet pipe, and fix it with clamps.
8. Fit a new gasket, fix the turbocharger coolant/water outlet pipe to the turbocharger, fit 1 new hollow bolt, tighten to **35–40Nm**, and check the torque.
9. Fix the turbocharger outlet pipe clamp to the heat shield bracket of the cylinder head, fit 1 bolt, tighten to **8–12Nm** and check the torque.
10. Connect the turbocharger coolant/water return hard pipe to the turbocharger water return hose, and secure with clamps.
11. Fit a new gasket, fix the turbocharger coolant/water inlet pipe to the turbocharger, fit 1 new hollow bolt, tighten to **35–40Nm**, and check the torque.
12. Fix the turbocharger inlet pipe clamp to the stud of the camshaft cover, fit 1 nut, tighten to **8–12Nm** and check the torque.
13. Fix the heat shield of the cylinder head to the heat shield bracket, fit 4 bolts, tighten to **9–11Nm** and check the torque.
14. Fit overflow pipe A.

☞**Overflow Pipe A Refit**

15. Connect the intercooler air inlet hose to the turbocharger, and fix it with clamps.
16. Fit the turbocharger air inlet hose to the turbocharger, and secure it with clamps.
17. Connect the turbocharger to the pressure control hose at the exhaust gas port.
18. Connect the connector of the turbocharger.
19. Secure the turbocharger bracket on the cylinder body, fit 1 bolt, tighten them to **50–60Nm**, and check the torque.
20. Fix the turbocharger bracket to the turbocharger, fit 1 bolt, tighten to **40–45Nm**, and check the torque.
21. Fit the three-way catalytic converter assembly.

☞**Three-way Catalytic Converter Remove**

22. Refill engine oil.

☞**Engine Oil Refill**

23. Refill the cooling system.

☞**Coolant - Refill**

24. Connect the battery negative.

www.cargeek.ir

www.cargeek.ir

Turbocharger Coolant Outlet Pipe

Remove

1. Disconnect the battery negative.
2. Drain the engine coolant.

Coolant – Drain

3. Remove 3 bolts fixing the turbocharger heat shield to the turbocharger, and remove the turbocharger heat shield.

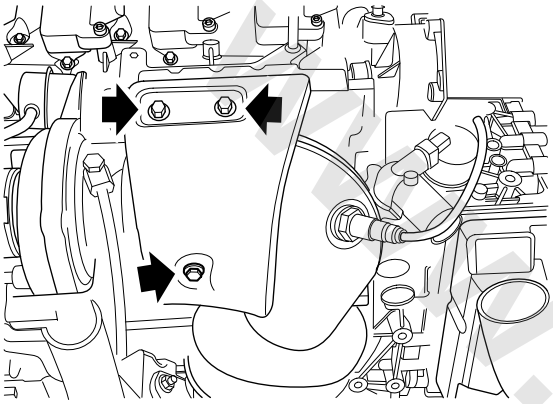

S1113578

4. Remove overflow pipe A.

Overflow Pipe A Remove

5. Remove the remaining 4 bolts fixing the heat shield of the cylinder head to the heat shield bracket and remove the heat shield.

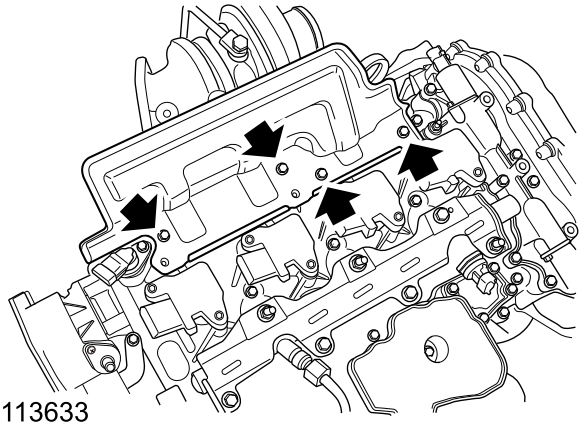

S1113633

6. Remove and discard the hollow bolt fixing the turbocharger coolant/water inlet pipe to the turbocharger, and take away and discard the two copper washers.

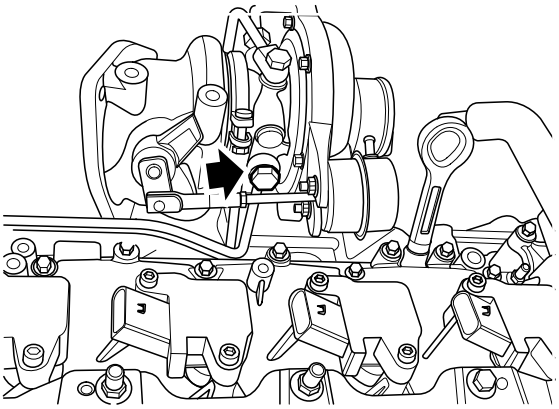

S1113581

7. Remove 1 nut (1) fixing the turbocharger coolant/water inlet pipe clamp to the stud of the camshaft cover.

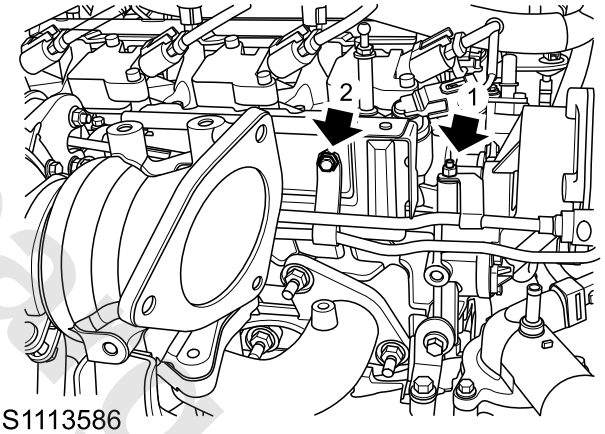

S1113586

8. Release the clamp, and disconnect the turbocharger water inlet pipe from the electronic water pump outlet pipe, and take away the turbocharger water inlet pipe.
9. Remove and discard the hollow bolt fixing the turbocharger coolant/water outlet pipe to the turbocharger, and take away and discard the two copper washers.

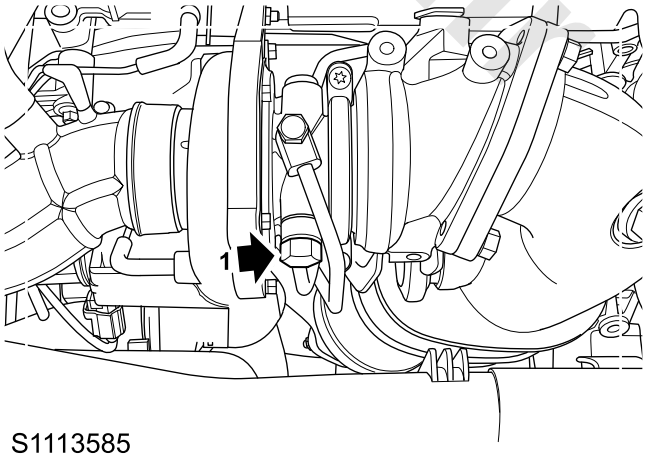

S1113585

10. Remove 1 bolt (2) fixing the turbocharger coolant/water outlet pipe clamp to the heat shield bracket of the cylinder head.
11. Release the clamp, disconnect the turbocharger water

www.cargeek.ir

return hard pipe and turbocharger water return hose connector, and take away the turbocharger water outlet pipe.

Refit

1. Connect the turbocharger coolant/water return hard pipe to the turbocharger water return hose, and secure with clamps.
2. Fit a new gasket, fix the turbocharger coolant/water outlet pipe to the turbocharger, fit 1 new hollow bolt, tighten to **35–40Nm**, and check the torque.
3. Fix the turbocharger outlet pipe clamp to the heat shield bracket of the cylinder head, fit 1 bolt, tighten to **8–12Nm** and check the torque.
4. Connect the turbocharger water inlet pipe to the electronic water pump outlet pipe, and fix it with clamps.
5. Fit a new gasket, fix the turbocharger coolant/water inlet pipe to the turbocharger, fit 1 new hollow bolt, tighten to **35–40Nm**, and check the torque.
6. Fix the turbocharger inlet pipe clamp to the stud of the camshaft cover, fit 1 nut, tighten to **8–12Nm** and check the torque.
7. Fix the heat shield of the cylinder head to the heat shield bracket, fit 4 bolts, tighten to **9–11Nm** and check the torque.
8. Fit overflow pipe A.

Overflow Pipe A Refit

9. Fix the turbocharger heat shield to the turbocharger, fit 3 bolts, tighten to **22–28Nm**, and check the torque.
10. Refill the engine coolant.

Coolant - Refill

11. Connect the battery negative.

Turbocharger Coolant Inlet Pipe

Remove

1. Disconnect the battery negative.
2. Remove the engine cover.
3. Drain the engine coolant.

Coolant - Drain

4. Remove 3 bolts fixing the turbocharger heat shield to the turbocharger, and remove the turbocharger heat shield.

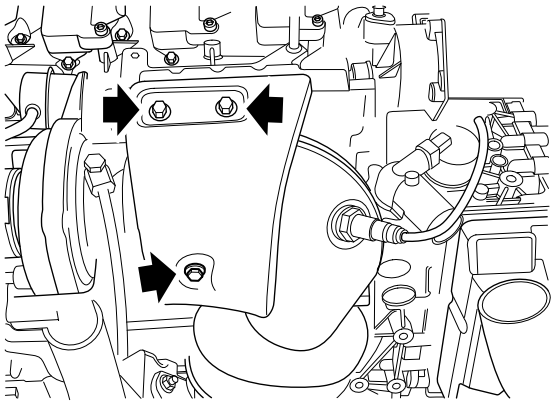

S1113578

5. Remove overflow pipe A.

Overflow Pipe A Remove

6. Remove the remaining 4 bolts fixing the heat shield of the cylinder head to the heat shield bracket and remove the heat shield.

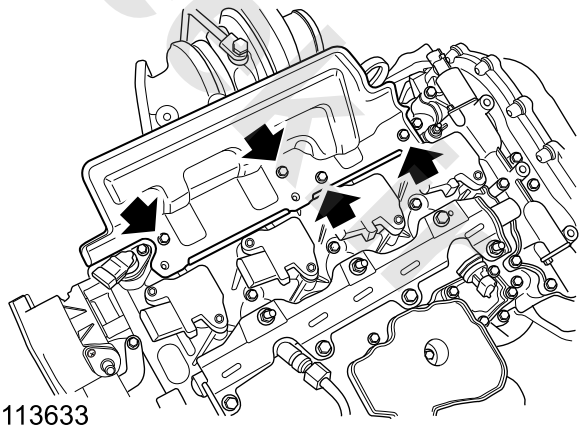

S1113633

7. Remove and discard the hollow bolt fixing the turbocharger coolant/water inlet pipe to the turbocharger, and take away and discard the two copper washers.

www.cargeek.ir

www.cargeek.ir

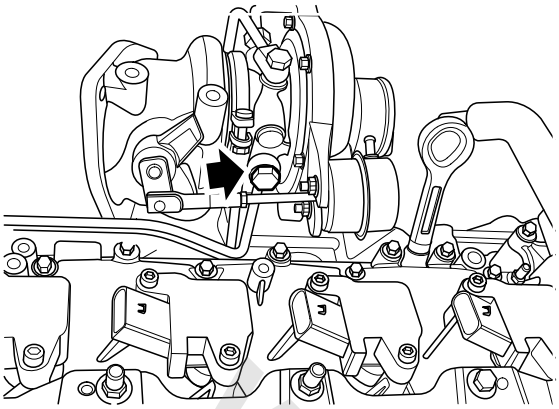

S1113581

8. Remove 1 nut (1) fixing the turbocharger coolant/water inlet pipe clamp to the stud of the camshaft cover, and take away turbocharger water inlet pipe.

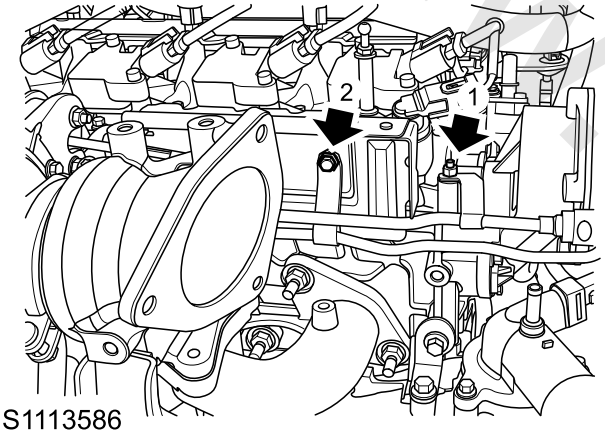

S1113586

9. Release the clamp, and disconnect the turbocharger water inlet pipe from the electronic pump outlet pipe.
10. Remove the turbocharger water inlet pipe.

Refit

1. Connect the turbocharger water inlet pipe to the electronic water pump outlet pipe, and fix it with clamps.
2. Fix the turbocharger water inlet pipe to the turbocharger, fit 2 new copper washers and 1 hollow bolt, tighten to **35–40Nm**, and check the torque.
3. Fix the turbocharger inlet pipe clamp to the stud of the camshaft cover, fit 1 nut, tighten to **8–12Nm** and check the torque.
4. Fix the heat shield of the cylinder head to the heat shield bracket, fit 4 bolts, tighten to **9–11Nm** and check the torque.
5. Fit overflow pipe A.

Overflow Pipe A Refit

6. Fix the turbocharger heat shield to the turbocharger, fit 3 bolts, tighten to **22–28Nm**, and check the torque.
7. Refill the engine coolant.

Coolant - Refill

8. Fit the engine cover.
9. Connect the battery negative.

www.cargeek.ir

www.cargeek.ir

Turbocharger Oil Return Pipe

Remove

1. Disconnect the battery negative.
2. Drain the engine oil.

☞ **Engine Oil Drain**

3. Remove 3 bolts fixing the turbocharger heat shield to the turbocharger, and remove the turbocharger heat shield.

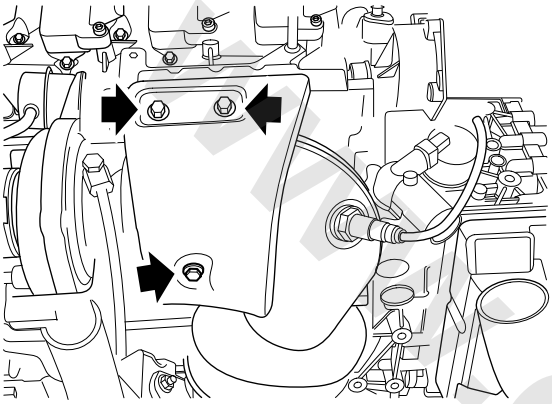

S1113578

4. Remove 2 bolts fixing the turbocharger bracket to the cylinder block and turbocharger, and remove the bracket.

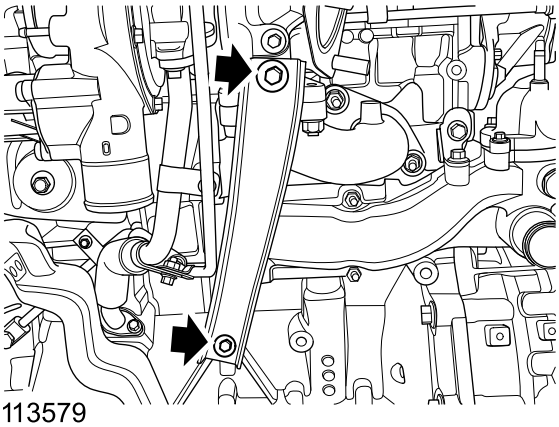

S1113579

5. Remove 1 bolt (1) fixing the turbocharger oil return pipe clamp to the exhaust manifold.
6. Remove 1 bolt (2) fixing the turbocharger oil inlet pipe to the turbocharger oil return pipe clamp.
7. Remove 2 bolt (3) fixing the turbocharger oil return pipe to the cylinder block.

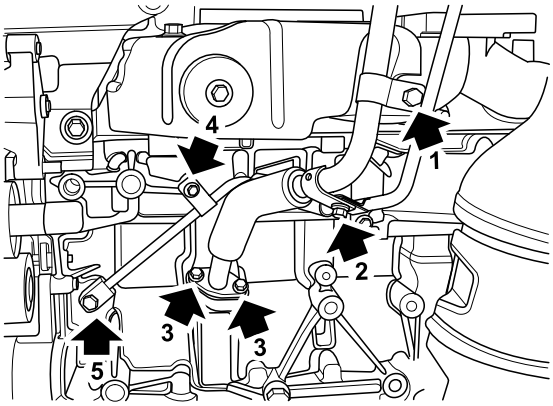

S1113583

8. Remove 2 bolts fixing the turbocharger oil return pipe to the turbocharger, and remove the turbocharger oil return pipe.

Refit

1. Fix the turbocharger oil return pipe to the turbocharger, fit 2 bolts, tighten to **9–11Nm**, and check the torque.
2. Secure the turbocharger oil return pipe on the cylinder block, fit 2 bolts, tighten to **9–11Nm**, and check the torque.
3. Fix the turbocharger oil return pipe clamp to the exhaust manifold, fit 1 bolt, tighten to **22-28Nm**, and check the torque.
4. Fix the turbocharger oil inlet pipe to the turbocharger oil return pipe clamp, fit 1 bolt, tighten to **9–11Nm**, and check the torque.
5. Secure the turbocharger bracket on the cylinder body, fit 1 bolt, tighten them to **50–60Nm**, and check the torque.
6. Fix the turbocharger bracket to the turbocharger, fit 1 bolt, tighten to **40–45Nm**, and check the torque.
7. Fix the turbocharger heat shield to the turbocharger, fit 3 bolts, tighten to **22–28Nm**, and check the torque.
8. Refill engine oil.

☞ **Engine Oil Refill**

9. Connect the battery negative.

www.cargeek.ir

Turbocharger Air Intake Hose

Remove

1. Disconnect the full load breather pipe and turbocharger vacuum pipe (1) from the turbocharger air inlet hose.
2. Release the clamp, disconnect the turbocharger air inlet hose (2) from the turbocharger, seal the opening and ensure there is no foreign material in the turbocharger.
3. Release the clamp, disconnect the turbocharger air inlet hose (3) from the air flow meter, and seal the opening and ensure there is no foreign material.

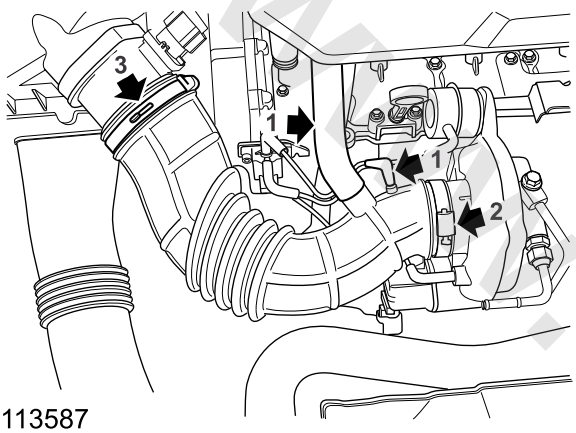

S1113587

Refit

1. Fit the turbocharger air inlet hose to the air flow meter, and secure with clamps.
2. Fit the turbocharger air inlet hose to the turbocharger, and secure it with clamps.
3. Connect the full load breather pipe and vacuum pipe to the turbocharger air inlet hose.

Turbocharger Oil Inlet Pipe

Remove

1. Disconnect the battery negative.
2. Drain the engine oil.

Engine Oil Refill

3. Remove 3 bolts fixing the turbocharger heat shield to the turbocharger, and remove the turbocharger heat shield.

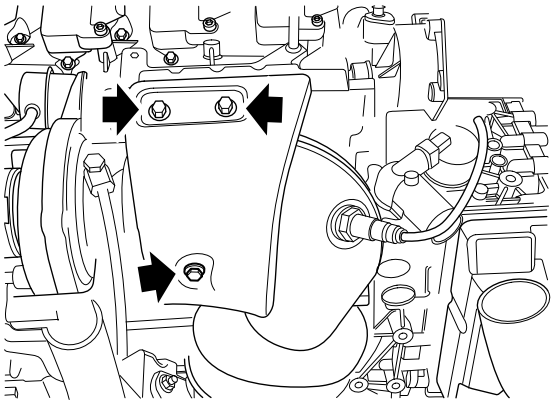

S1113578

4. Remove the alternator.

Alternator Remove

5. Remove and discard the hollow bolt (2) fixing the turbocharger oil inlet pipe to the turbocharger, and take away and discard the two copper washers.

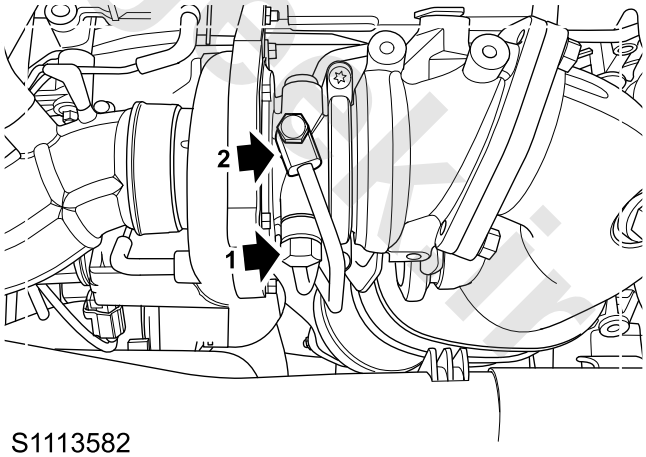

S1113582

6. Remove 1 bolt (2) fixing the turbocharger oil inlet pipe to the turbocharger oil return pipe clamp, and take away the turbocharger oil inlet pipe.
7. Remove 1 bolt (4) fixing the turbocharger oil inlet pipe to the cylinder block.
8. Remove and discard the hollow bolt (5) fixing the turbocharger oil inlet pipe to the turbocharger, and take away and discard the two copper washers.

www.cargeek.ir

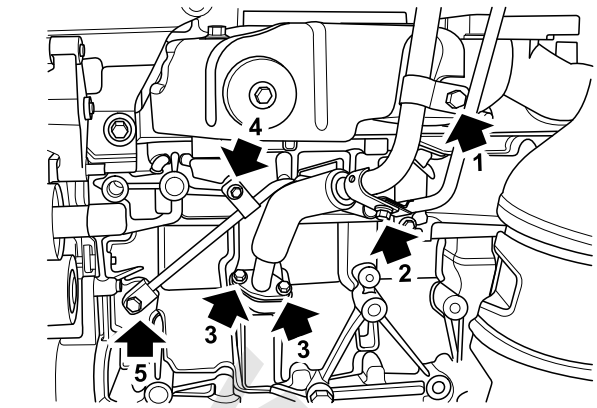

S1113583

9. Remove the turbocharger oil inlet pipe.

Refit

1. Fit a new gasket, fix the turbocharger oil inlet pipe to the cylinder block, fit 1 new hollow bolt, tighten to **18–22Nm**, and check the torque.
2. Secure the turbocharger oil inlet pipe on the cylinder block, fit 1 bolt, tighten to **18–22Nm**, and check the torque.
3. Fix the turbocharger oil inlet pipe to the turbocharger oil return pipe clamp, fit 1 bolt, tighten to **9–11Nm**, and check the torque.
4. Fit a new gasket, fix the turbocharger oil inlet pipe to the turbocharger, fit 1 new hollow bolt, tighten to **18–22Nm**, and check the torque.
5. Fit the alternator.

☞ **Alternator Refit**

6. Fix the turbocharger heat shield to the turbocharger, fit 3 bolts, tighten to **22–28Nm**, and check the torque.
7. Refill engine oil.

☞ **Engine Oil Refill**

8. Connect the battery negative.

Electronic Throttle Intake Pipe

Remove

1. Disconnect the battery negative.
2. Remove the engine cover.
3. Remove the battery box.

☞ **Battery Remove**

4. Remove the intake air temperature/manifold absolute pressure sensor.

☞ **Intake Air Temperature/Manifold Absolute Pressure Sensor Remove**

5. Remove 1 bolt (1) fixing the throttle intake pipe to the bracket.
6. Release the clamp, disconnect the throttle intake pipe (intercooler hose) (2) from the throttle hard intake pipe.
7. Release the clamp, disconnect the throttle intake pipe (intercooler hose) (3) from the intercooler to remove the throttle intake pipe (intercooler hose).
8. Release the clamp, disconnect the throttle intake pipe (engine hose) (4) from the throttle hard intake pipe to remove the throttle hard intake pipe.
9. Release the clamp, disconnect the throttle intake pipe (engine hose) (5) from the throttle to remove the throttle intake pipe (engine hose).

Refit

1. Connect the throttle intake pipe (throttle hose) to the throttle, make sure the rubber hose port is pushed to the bottom of the throttle, and secure with clamps. Fit the clamp into the round rubber groove and tighten to **5.5Nm**.

Tip: *If it is improperly fitted, it may drop.*

2. Connect the throttle intake pipe (engine hose) to the throttle hard intake pipe and secure with clamps.
3. Connect the throttle intake pipe (intercooler hose) to the throttle hard intake pipe and secure with clamps.
4. Connect the throttle intake pipe (intercooler hose) to the intercooler, secure with clamps and tighten to **10–15Nm**.
5. Fix the throttle air inlet pipe to the bracket, fit 1 bolt, tighten to **9–11Nm**, and check the torque.
6. Fit the intake air temperature/manifold absolute pressure sensor.

☞ **Intake Air Temperature/Manifold Absolute Pressure Sensor Refit**

7. Fit the battery box.

☞ **Battery Refit**

8. Fit the engine cover.
9. Connect the battery negative.

www.cargeek.ir

www.cargeek.ir

Intercooler Air Inlet Hose

Remove

1. Release the clamp, disconnect the intercooler air inlet hose (4) from the turbocharger, seal the opening and ensure there is no foreign material in the turbocharger.

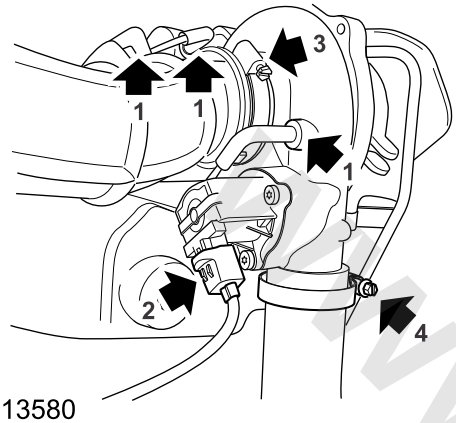

S1113580

2. Remove the bottom deflector.

Bottom Deflector Remove

3. Release the clamp, and disconnect the intercooler air inlet hose from the intercooler to remove the intercooler air inlet hose.

Refit

1. Fit the intercooler air inlet hose to the intercooler, and fix it with clamps.
2. Fit the bottom deflector.

Bottom Deflector Refit

3. Connect the intercooler air inlet hose to the turbocharger, and fix it with clamps.

Oil Filter Module

Remove

1. Disconnect the battery negative.
2. Drain the engine coolant.

Coolant - Drain

3. Drain the engine oil.

Engine Oil Drain

4. Remove the right front drive shaft.

Right Front Drive Shaft Remove

5. Disconnect the connector (1) of the engine oil pressure switch.
6. Disconnect the clutch water pump connector (2).
7. Remove the ground wire (3).

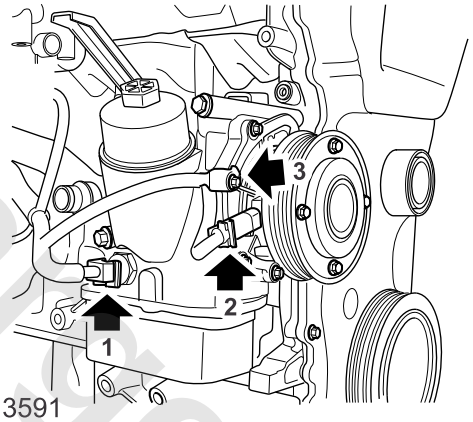

S1113591

8. Release the clamp, and disconnect hose from the oil filter module.
9. Remove 1 bolt fixing the water pump inlet pipe to the cylinder block.
10. Remove 1 bolt fixing the water pump inlet pipe to the oil filter module, disconnect the water pump inlet pipe and discard the seal ring.

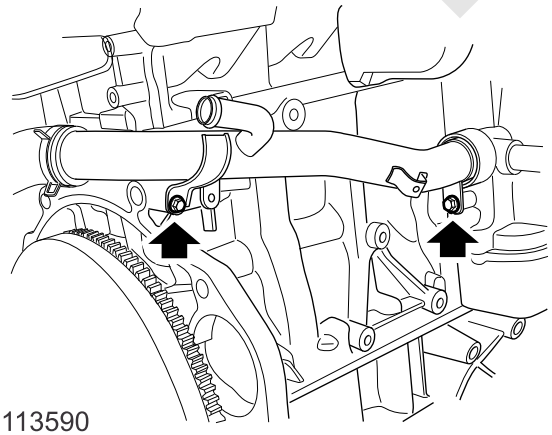

S1113590

11. Remove 4 bolts fixing the oil filter module to the cylinder block, remove the oil filter module and discard the gasket.

www.cargeek.ir

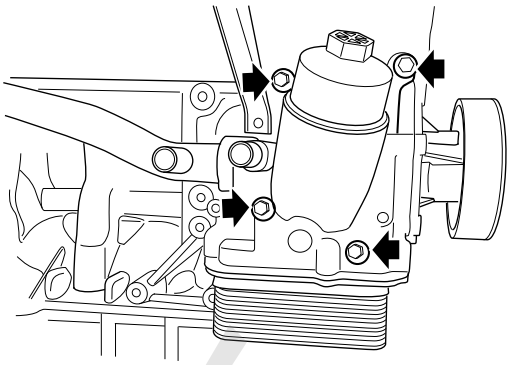

S1113592

Refit

1. Clean the mating surface between the cylinder block and the oil filter module, ensure it is clean and smooth.
2. Fit a new gasket, fix the oil filter module to the cylinder block, fit 4 bolts, tighten to **22-28Nm**, and check the torque.
3. Fit a new O ring to the water pump inlet pipe, apply sealant to it, fit the water pump inlet pipe to the oil filter module, fit 1 bolt, tighten to **8–12Nm** and check the torque.
4. Secure the water pump inlet pipe on the cylinder block, fit 1 bolt, tighten to **8–12Nm**, and check the torque.
5. Connect the hose to the oil filter module and secure with clamps.
6. Fit the ground wire.
7. Connect the oil pressure switch connector.
8. Connect the clutch water pump connector.
9. Fit the right front drive shaft.

☞ **Right Front Drive Shaft Refit**

10. Refill engine oil.

☞ **Engine Oil Refill**

11. Refill the engine coolant.

☞ **Coolant - Refill**

12. Connect the battery negative.

www.cargeek.ir

Special Tools

Tool Number	Description	Picture
TEN00123	Crankshaft holding tool	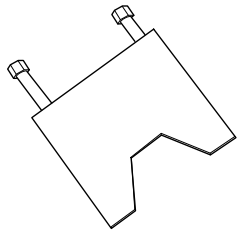 TEN00123
TEN00130	Connecting rod bearing centring tool	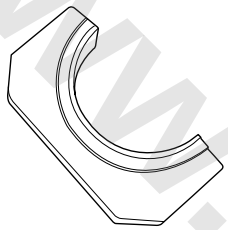 TEN00130
T10016	Piston ring compressor	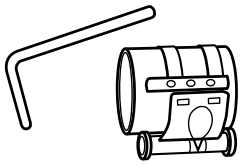 T10016
TEN00128	Protector sleeve crankshaft rear oil seal	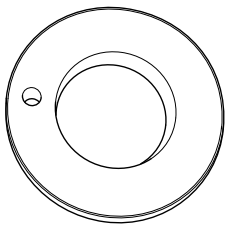 TEN00128
TEN00129	Replacer crankshaft front oil seal	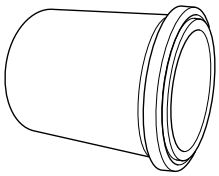 TEN00129

Tool Number	Description	Picture
TEN00122	Flywheel locking tool	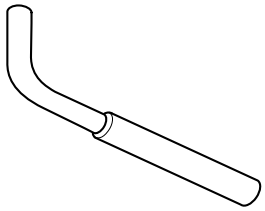 TEN 00122
TEN00126	Retainer oil pump gear	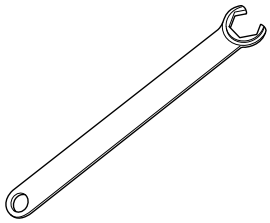 TEN00126
T10001	Engine oil pressure test equipment	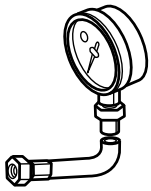 T10001
T10002	Adaptor engine oil pressure test	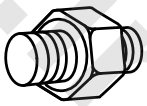 T10002
TEN00127	Oil pan locating pins	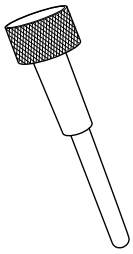 TEN00127

www.cargeek.ir

Tool Number	Description	Picture
TEN00120	Lifting lug double	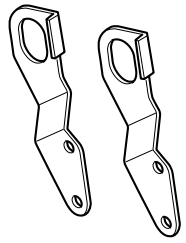 TEN00120
T10007	Engine lift bracket	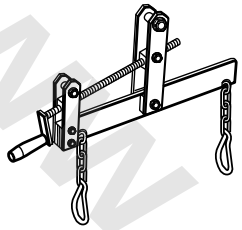 T10007
TEN00070	Engine support	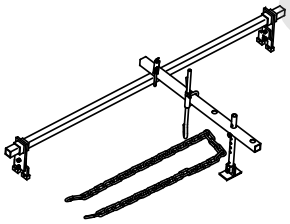 TEN00070
TEN00009	Retainer belt wheel	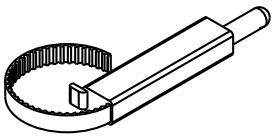 TEN00009
TEN00124	Camshaft timing locking tool	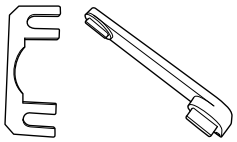 TEN00124

www.cargeek.ir

www.cargeek.ir

Engine mechanical system-1.5T

Specifications

Torque

Description	Value
Bolt - transmission bracket to transmission bracket	50Nm+45°
Bolt -tie bar lower to tie bar lower bracket	90-110Nm
Bolt - A/C hose to compressor	19–25Nm
Bolt -battery bracket to body	40-50Nm
Bolt - transmission bracket to transmission bracket	(45-55)Nm+(40-50)°
Nut - transmission bracket to transmission bracket	(45-55)Nm+(40-50)°
Bolt - engine bracket to engine	58-62Nm
Nut- engine mounting to engine bracket	90-110Nm
Bolt- engine bracket to engine bracket	90-110Nm
Bolt - engine mounting to carling	90-110Nm
Bolt - engine mounting to body	55-65Nm
Bolt - flywheel to crankshaft	30Nm + 70°
plug -cylinder head channel	53-67Nm
Bolt - cylinder head to cylinder block	30Nm+240°
plug -cylinder block channel	53-67Nm
plug - oil cylinder block	45-55Nm
Bolt- cooling jets to crankcase	8-12Nm
Bolt - knock sensor	15-25Nm
plug - oil press sensor	31-39Nm
Bolt - connecting rod	25Nm+75°
Bolt - oil deflector to lower crankcase	8-12Nm
Bolt -Oil Separator Drain Pipe to lower crankcase	8-12Nm
Bolt - main bearing cap to cylinder block	15Nm+ (176-184) °
Bolt - lower crankcase to cylinder block	8-12Nm
Bolt - crank sensor	8-12Nm
Bolt - A/C Compressor to engine	19–25Nm
Bolt - turbocharger outlet oil tube to crankcase	8-12Nm
Bolt - upper oil pan to lower crankcase	9-11Nm
Bolt - wiring harness connector to upper oil pan	8-12Nm
Bolt - lower oil pan to upper oil pan	9-11Nm
Bolt - engine to transmission	49–67Nm
Bolt - camshaft cover to cylinder head	14-16Nm
Bolt - PCV valves to camshaft cover	8-12Nm
Bolt - PCV valves to turbocharger connector	8-10Nm
Bolt -high pressure tube bracket to camshaft cover	8-12Nm
Bolt - torsion vibration damper to crankshaft	100Nm+(176-184)°
Bolt - front cover to cylinder block	14-16Nm
Bolt - front cover to cylinder block	51-65Nm
Bolt - upper oil pan to front cover	8-12Nm

www.cargeek.ir

Description	Value
Bolt - fixed guide to cylinder block	8-12Nm
Bolt - pivot guide to cylinder block	21-29Nm
Bolt - chain guide rail upper to camshaft cover	8-12Nm
Bolt - VVT unit to camshaft	20Nm+90°
Bolt - timing chain tensioner to cylinder block	21-29Nm
Bolt- oil pump to lower crankcase	9-11Nm
Bolt- oil pump tensioner to lower crankcase	8-12Nm
Bolt- camshaft bearing cap to cylinder head	10-14Nm
Bolt - intake manifold to cylinder head	8-12Nm
Bolt - TMAP to inlet manifold	4-5Nm
Bolt -oil pick pipe to oil pump	8-12Nm
Bolt - mechanical vacuum pump to cylinder head	21-29Nm
Bolt-hose CAC to engine	7–10Nm
Nut - turbocharger to cylinder head	21-29Nm
Bolt - turbocharger outlet oil tube to turbocharger	9-11Nm
Bolt- turbocharger inlet pipe to turbocharger	31-39Nm
Bolt - turbocharger inlet oil tube to turbocharger	18-22Nm
Bolt -turbocharger heat shield to turbocharger	10-12Nm
Bolt- turbocharger outlet pipe to camshaft cover	8-12Nm
Bolt- turbocharger outlet pipe to turbocharger	31-39Nm
Bolt - outlet assembly to engine	10–14Nm
Bolt- oil cooler assembly to water pump	8-12Nm
Bolt - water pump to cylinder block	22-28Nm
Oil filter	26-34Nm

www.cargeek.ir

www.cargeek.ir

www.cargeek.ir

Description	Value
Plug - oil pan drain	21-29Nm

Parameter

1.5T main block

Model	1.5 turbocharger gasoline engine, with 16 valves, dual overhead camshaft, variable intake cam timing
Cylinder arrangement	4-cylinder, in-line
Cylinder Bore Diameter:	Φ74mm
Stroke	86.6mm
Displacement	1.490 L
Compression Ratio	10.0:1
Ignition Sequence	1-3-4-2
Direction of rotation	Clockwise when viewed from engine front end
Rated Power	124kW/5600 rpm (RON91)
Maximum torque	250Nm/1700 rpm–4400rpm
Idle speed	680 rpm
Max Speed of Engine	6600 rpm
Weight (excluding engine oil, PAS, A/C, clutch assembly)	116kg (excluding engine oil, A/C, clutch assembly, DIN standard target weight)
Spark Plug Gap	0.60-0.70mm

1.5T Cylinder block

Cylinder block	
Cylinder block material	Aluminum alloy
Type of cylinder liner	Pre-cast mushroom head cylinder liner
Cylinder liner diameter	Primary: Φ74±0.008mm Other: Φ74±0.011mm
Cylinder Hole Out-of-roundness	0.013mm
Surface flatness - Top surface of cylinder block - Up to 25mm in length	0.025mm
Surface flatness - Top surface of cylinder block - Up to 150mm in length	0.05mm

www.cargeek.ir

1.5T Crankshaft

Crankshaft	
Connection Rod Journal Diameter	Φ44±0.008mm
Crankshaft Axial Gap	0.15-0.38mm
Crankshaft Main Bearing Bore Diameter	Primary: Φ51.875±0.007mm Other: Φ51.875±0.011mm
Crankshaft Main Bearing Gap #1 Bearing	0.011-0.070mm
Crankshaft Main Bearing Gap #2, 3, 4 and 5 Bearings	0.012-0.067mm
Crankshaft Main Bearing Journal Diameter	Φ47±0.008mm
Crankshaft Main Bearing Journal Roundness	0.005mm
Runout of Main Journals 2, 3 and 4 about Main Journals 1, 5	0.035mm
Quantity of Main Bearing Shell	5 Pieces Each Up and Down
Type	Oil hole and oil groove are formed in the upper main bearing shell, wherein the upper main bearing 1 shell has coating, and the upper main bearing 4 shell is a flanged bearing shell with thrust plate. The other three bearing shells are consistent in models.
Thrust washer	There is no single thrust plate, machined into a whole with the upper main bearing 4 shell to form the flanged bearing shell.
Thrust washer thickness	1.7275-1.7775mm

1.5T Cylinder Gasket

Cylinder head	
Material	Aluminum alloy
Cylinder Head Height:	130.35±0.125mm
flatness	0.1mm
Valve seat angle - Pressure relief surface	Exhaust 50°, intake 56°
Valve seat angle - Base surface	90°
Valve seat angle - Bottom section	120°
Cylinder Hole Taper	0
Type of Hydraulic Tappet	Mechanical tappet, directly driven by camshaft
Hydraulic tappet outer diameter	Φ11.993±0.007mm

www.cargeek.ir

1.5T Camshaft

Camshaft	
Type	Double overhead assembled camshaft
Bearing	6nd bearing
Drive	Timing Chain Drive
Camshaft Journal Diameter-journals1	Φ30.935-Φ30.960mm
Camshaft Journal Diameter-journals2-6	Φ23.935-Φ23.960mm
Camshaft Thrust Width	33.175-33.525mm
Camshaft Axial Clearance	0.40-0.66mm
Camshaft Journal Clearance	0.040-0.085mm

www.cargeek.ir

www.cargeek.ir

1.5T Piston connecting rod

Piston and pin	
Piston pin gap- connecting hole	0.007-0.020mm
Piston pin gap- piston pin hole	0.002-0.010mm
Piston Pin Diameter	Φ17.997-Φ18.000mm
Piston Pin End Clearance	0.18-0.79mm
Piston Diameter (at a point 38mm below the top of the piston)	Φ73.957-Φ73.971mm
Piston and cylinder fit clearance	0.021-0.051mm
Piston pin hole diameter	Φ18.002-Φ18.010mm
Piston ring groove width - Top surface	1.23-1.25mm
Piston ring groove width - Secondary surface	1.23-1.25mm
Piston ring groove width - Oil control surface	2.03-2.05mm
Piston Ring	
Type	Two compression rings and one oil ring
Top compression ring	Steel tape ring, 1.2 (–0.03 , –0.01) mm in height
Second compression ring	Cast iron ring, 1.2 (–0.03 , –0.01) mm in height
Oil ring	Three-plate oil ring, 1.92±0.07mm in height
Tolerance between piston ring and ring groove: Top compression ring Second compression ring Oil ring	 0.03-0.08mm 0.03-0.07mm 0.050-0.190mm
Piston ring gap clearance: Top compression ring Second compression ring Oil ring	 0.25-0.4mm 0.40-0.60mm 0.25-0.75mm
Connecting rod	
Clearance between connecting rod bearing and crankshaft pin	0.013-0.068mm
Connecting Rod Bore Diameter - Bearing End	Φ47.186-Φ47.202mm
Connecting Rod Bore Diameter - Piston Pin End (with a bushing)	Φ19.007-Φ19.017mm
Connection Rod Backlash	0.090-0.350mm

1.5T Lubrication

Lubrication system	
Type of oil pump	Vane type oil pump
Oil Filter	Full-flow
Engine Oil Pressure	200-480 kPa
Oil Volume	5.5 L

www.cargeek.ir

1.5T Valve Timing

Valve timing	
Intake valve: ON OFF Max lift	 39°CA BTDC 30°CA ABDC 8.5
Exhaust valve: ON OFF Max lift	 51°CA BBDC 1°CA BTDC 8.3
Clearance between valve stem and valve guide: Intake Valve Exhaust Valve	 0.025-0.065mm 0.035-0.075mm
Valve stem fit height: New Intake Valve New Exhaust Valve	 104.64±0.13mm 103.67±0.13mm
Intake Valve Head Diameter Intake Valve Exhaust Valve	 Φ28±0.13mm Φ23.3±0.13mm
Valve thickness: Intake Valve Exhaust Valve	 1.79±0.18mm 1.97±0.18mm
Valve Seat Roundness	0.015mm
Intake Valve Length	104.64±0.13mm
Exhaust Valve Length	103.67±0.13mm
The distance (a) from the valve seal lip to the bottom of the spring seat	16.9mm
Valves Stem diameter (Intake valves) Valves Stem diameter (Exhaust valves)	Φ4.965±0.01mm Φ4.955±0.01mm
Valve Surface Angle -Intake Valves & Exhaust Valves	46°±0.25°
Valve Spring: Free length: Mounting length Assembly load Intake Valve Open Load Exhaust Valve Open Load	 45.8mm 35mm 235N 425N 425N

www.cargeek.ir

Description and Operation

System Layout

SGE-1.5T Engine Layout

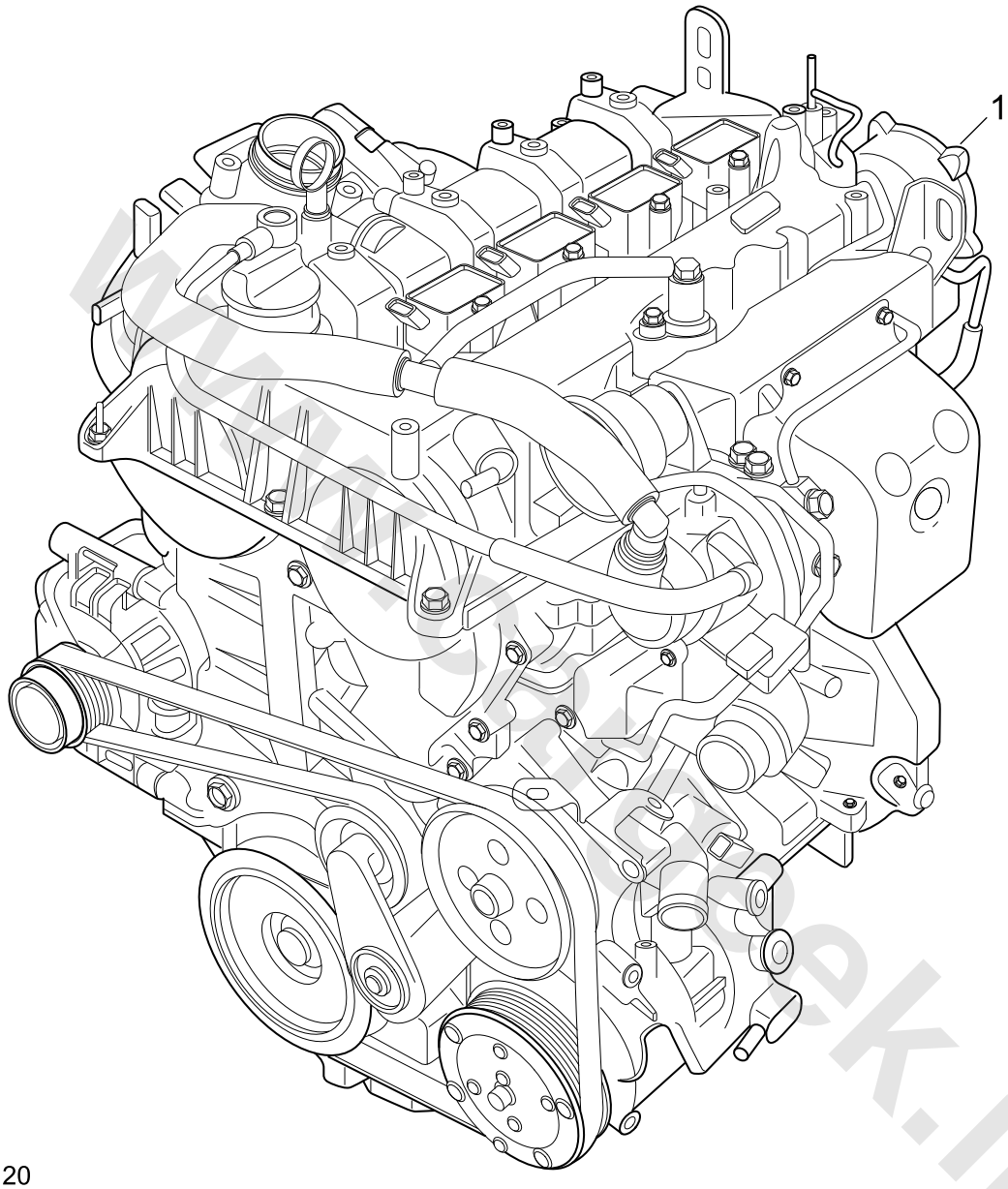

S1110120

1. 1.5T Engine

www.cargeek.ir

www.cargeek.ir

SGE-1.5T Cylinder Block Disassembled View

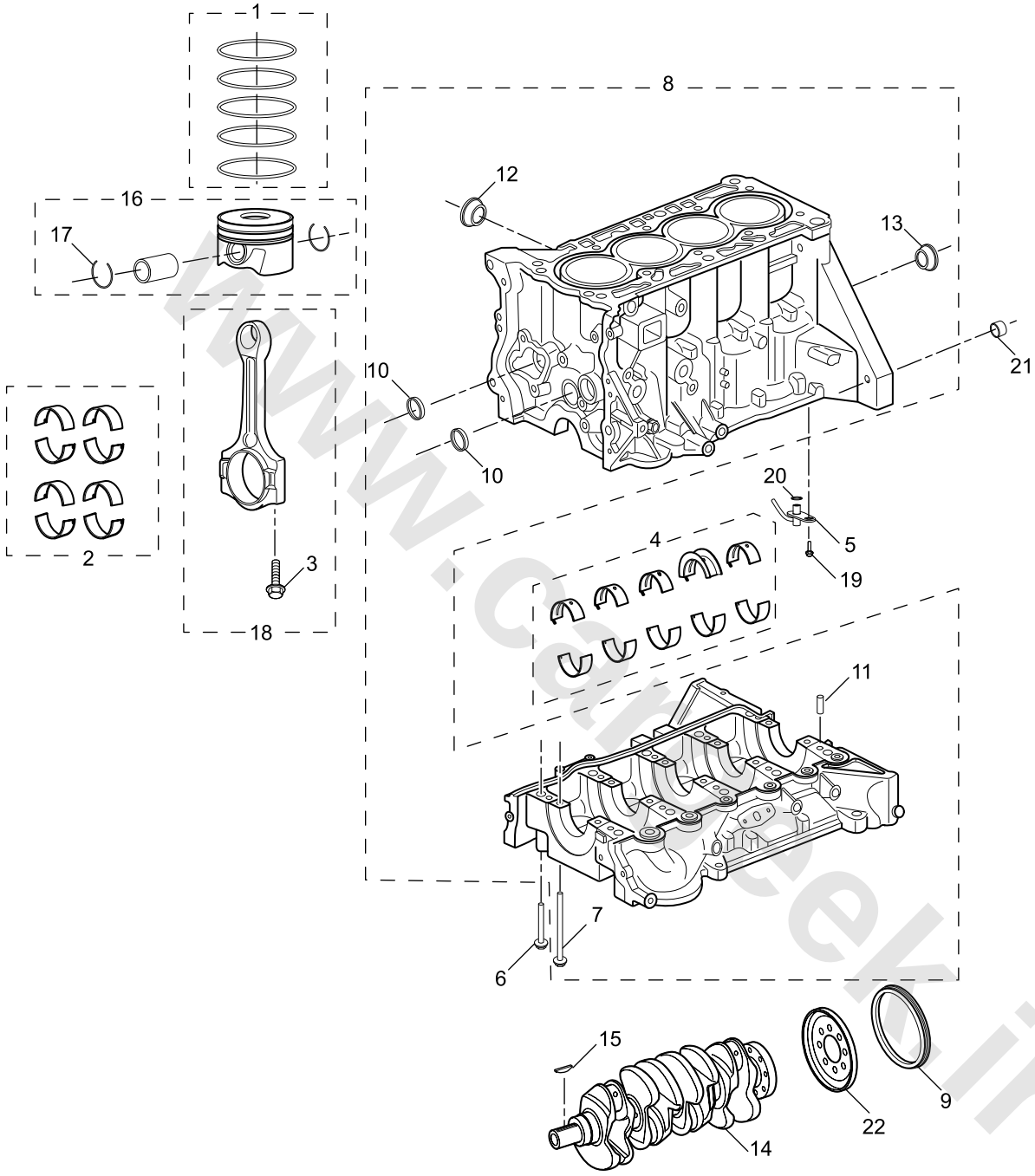

S1110121

1. Piston Ring
2. Connecting Rod Bearing Shell
3. Bolt - Engine Connecting Rod
4. Crankshaft Bearing Assembly
5. Piston Cooling Nozzle Assembly
6. Bolt - Lower Crankcase
7. Bolt - Main Bearing Cover
8. Cylinder Block Assembly
9. Crankshaft Rear Oil Seal
10. Engine Cylinder Block Core Hole Plug
11. Lower crankcase Locating Pin
12. Cylinder Block Water Jacket Plug
13. Engine Cylinder Block Oil Passage Hole Plug
14. Crankshaft Assembly
15. Crankshaft Torsional Vibration Shock Absorber Button
16. Piston Assembly (with Pin)
17. Piston Pin Retaining Ring
18. Connecting rod assembly
19. Screw - Piston Cooling Nozzle
20. Washer - Piston Cooling Nozzle

www.cargeek.ir

www.cargeek.ir

21. Locating Pin - Transaxle
22. Crankshaft Signal Wheel

www.cargeek.ir

www.cargeek.ir

SGE-1.5T Camshaft Cover Disassembled View

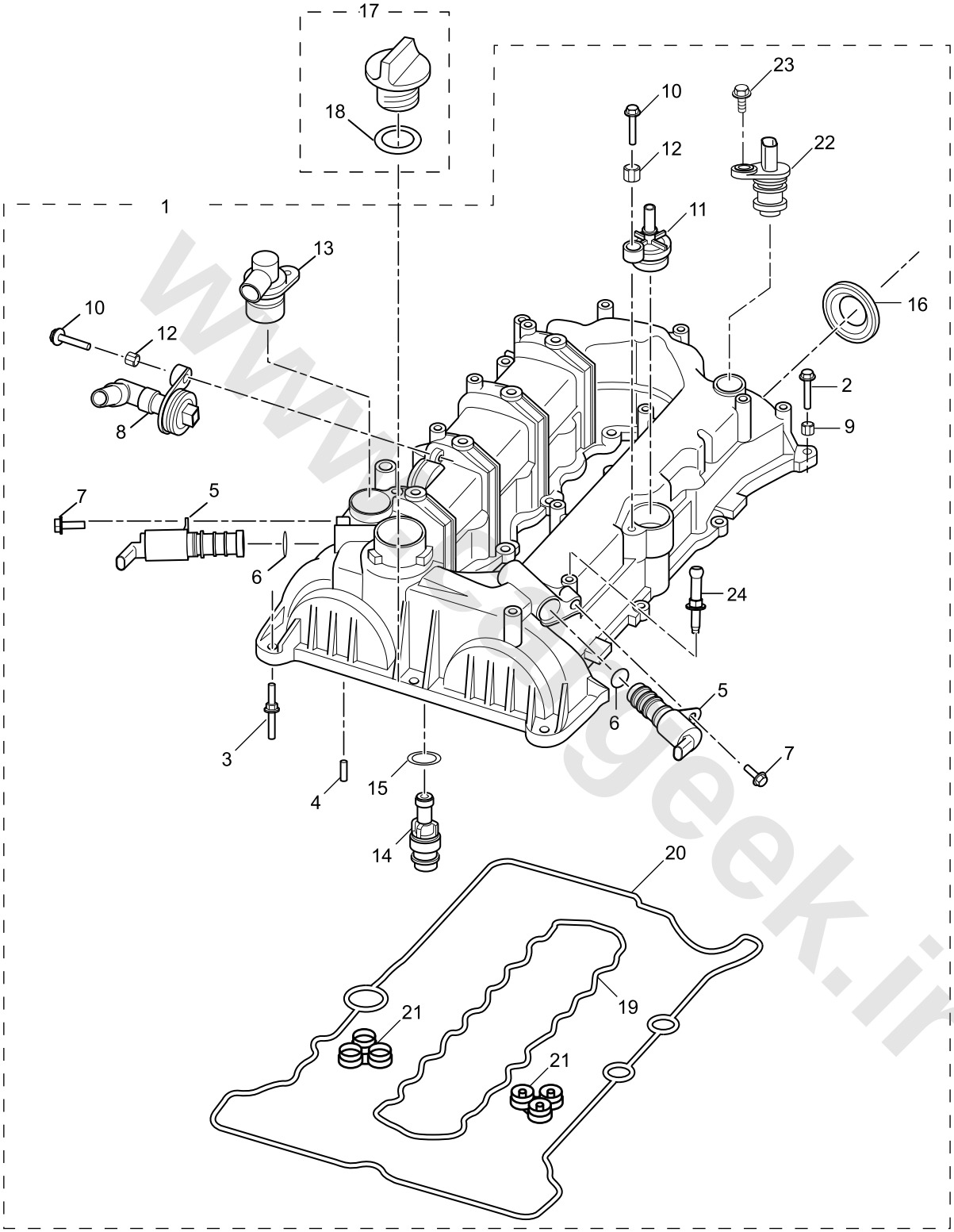

S1110122

1. Camshaft Cover Assembly
2. Bolt - Camshaft Cover
3. Stud - Camshaft Cover
4. Locating Pin - Camshaft Cover
5. Camshaft Position Actuator Solenoid Valve Assembly
6. O-ring - Camshaft Position Actuator Solenoid Valve
7. Bolt - Camshaft Position Actuator Solenoid Valve
8. Crankcase Pressure Regulating Valve Assembly
9. Fixing Sleeve - Camshaft Cover Bolt
10. Bolt - Crankcase Pressure Regulating Valve
11. Crankcase Pressure Regulating Valve Assembly
12. Fixing Sleeve - Crankcase Pressure Regulating Valve

www.cargeek.ir

13. Crankcase Pressure Regulating Valve
14. Crankcase Pressure Regulating Valve
15. Oil Seal - Crankcase Pressure Regulating Valve
16. Engine Vacuum Pump Oil Seal
17. Oil Filler Cap Assembly
18. Oil Filler Cap Seal Ring
19. Camshaft Cover Gasket
20. Camshaft Cover Gasket
21. Gasket - Camshaft Position Actuator Solenoid Valve
22. Camshaft Position Sensor
23. Screw - Camshaft Position Sensor
24. Stub - Camshaft Cover

www.cargeek.ir

www.cargeek.ir

SGE-1.5T Cylinder Head Disassembled View

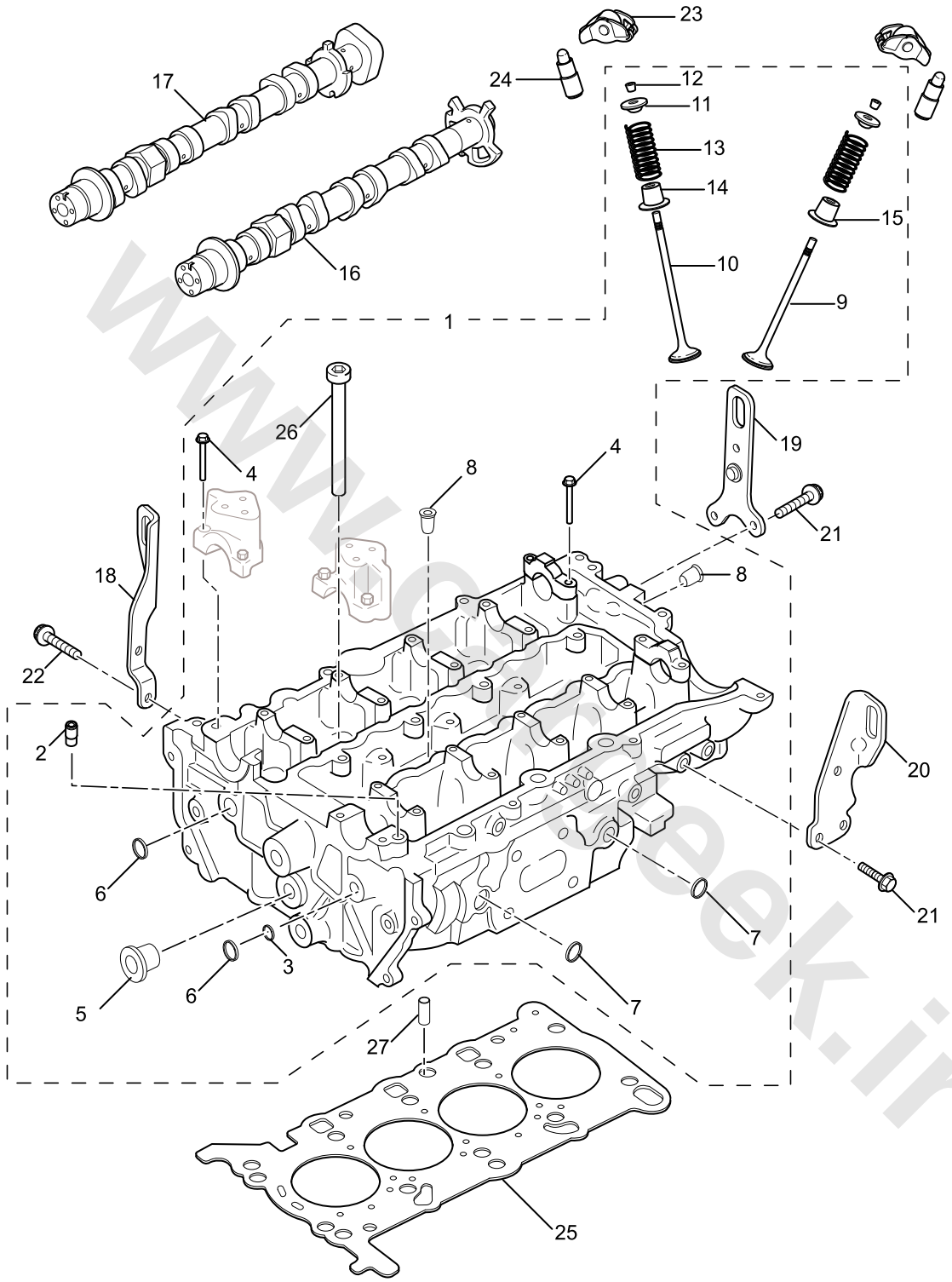

S1110123

1. Engine Cylinder Head Assembly
2. Camshaft Cover Check Valve
3. Cylinder Head Oil Passage Plug
4. Bolt - Camshaft Bearing Cover
5. Cylinder Head Plug
6. Cylinder Head Oil Passage Plug
7. Cylinder Head Water Jacket Plug
8. Cylinder Head Plug
9. Exhaust Valve
10. Intake Valve
11. Valve Spring Cap
12. Valve Lock Clip
13. Valve Spring
14. Valve Stem Oil Seal

www.cargeek.ir

15. Valve Stem Oil Seal
16. Exhaust Camshaft Assembly
17. Intake Camshaft Assembly
18. Front Engine Hoisting Bracket
19. Rear Engine Hoisting Bracket
20. Rear Engine Hoisting Bracket
21. Screw - Rear Engine Hoisting Bracket
22. Screw - Front Engine Hoisting Bracket
23. Engine Rocker Assembly
24. Valve Tappet Assembly
25. Cylinder Head Gasket
26. Cylinder Head Bolt
27. Cylinder Head Locating Pin

www.cargeek.ir

www.cargeek.ir

SEG-1.5T Engine Oil Pump and Oil Filter Disassembled View

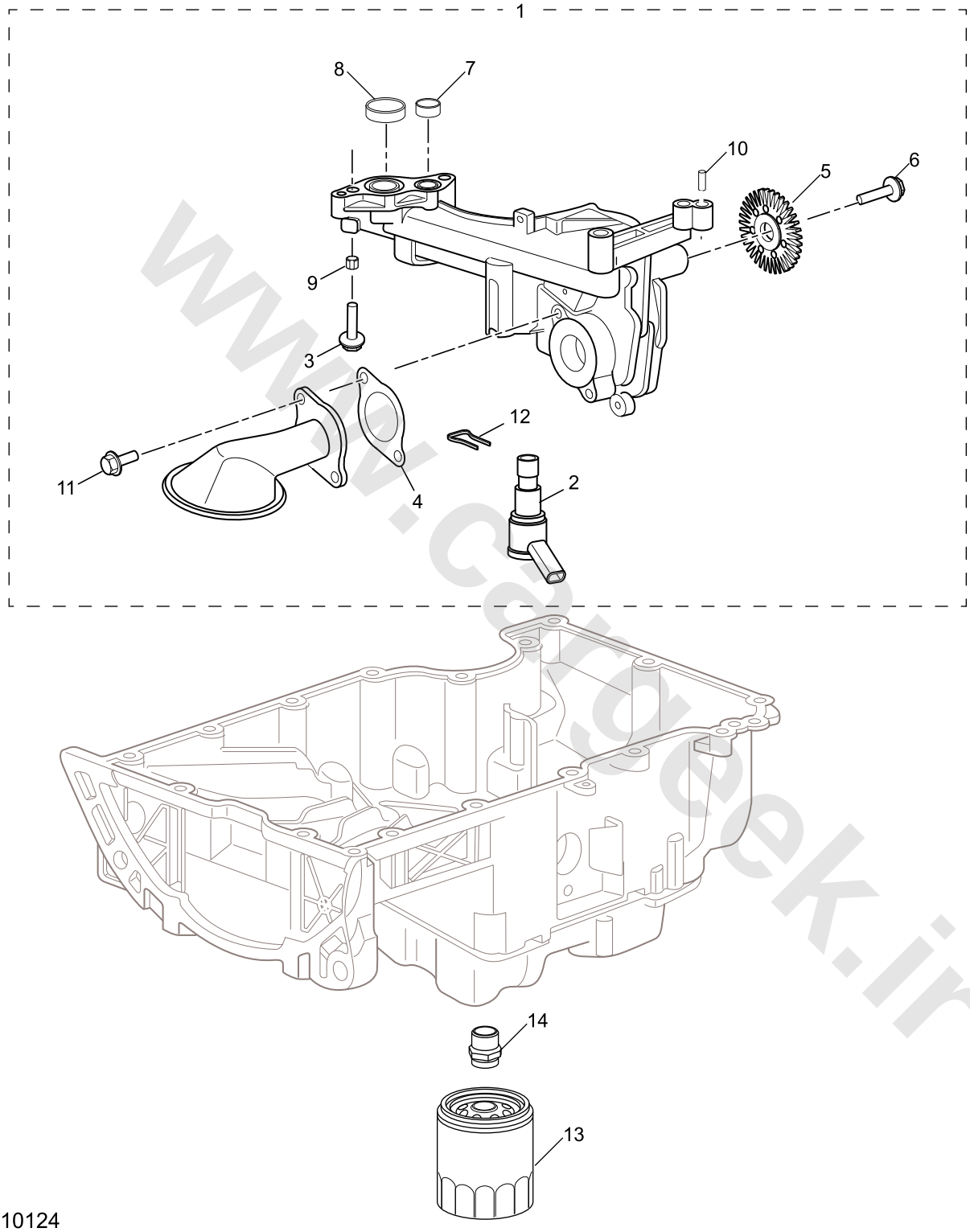

1. Oil Pump Assembly
2. Oil Control Valve
3. Bolt - Oil Pump
4. Gasket - Oil Pump Suction Pipe
5. Sprocket - Oil Pump
6. Bolt - Oil Pump Sprocket
7. Oil Pump Gasket
8. Oil Pump Gasket
9. Fixing Sleeve - Oil Pump Bolt
10. Locating Pin - Oil Pump
11. Bolt - Oil Pump Suction Pipe
12. Retainer - Oil Pump Flow Control Valve

www.cargeek.ir

13. Oil Filter Assembly
14. Bolt - Oil Filter

www.cargeek.ir

www.cargeek.ir

SGE1.5T Oil Pan Disassembled View

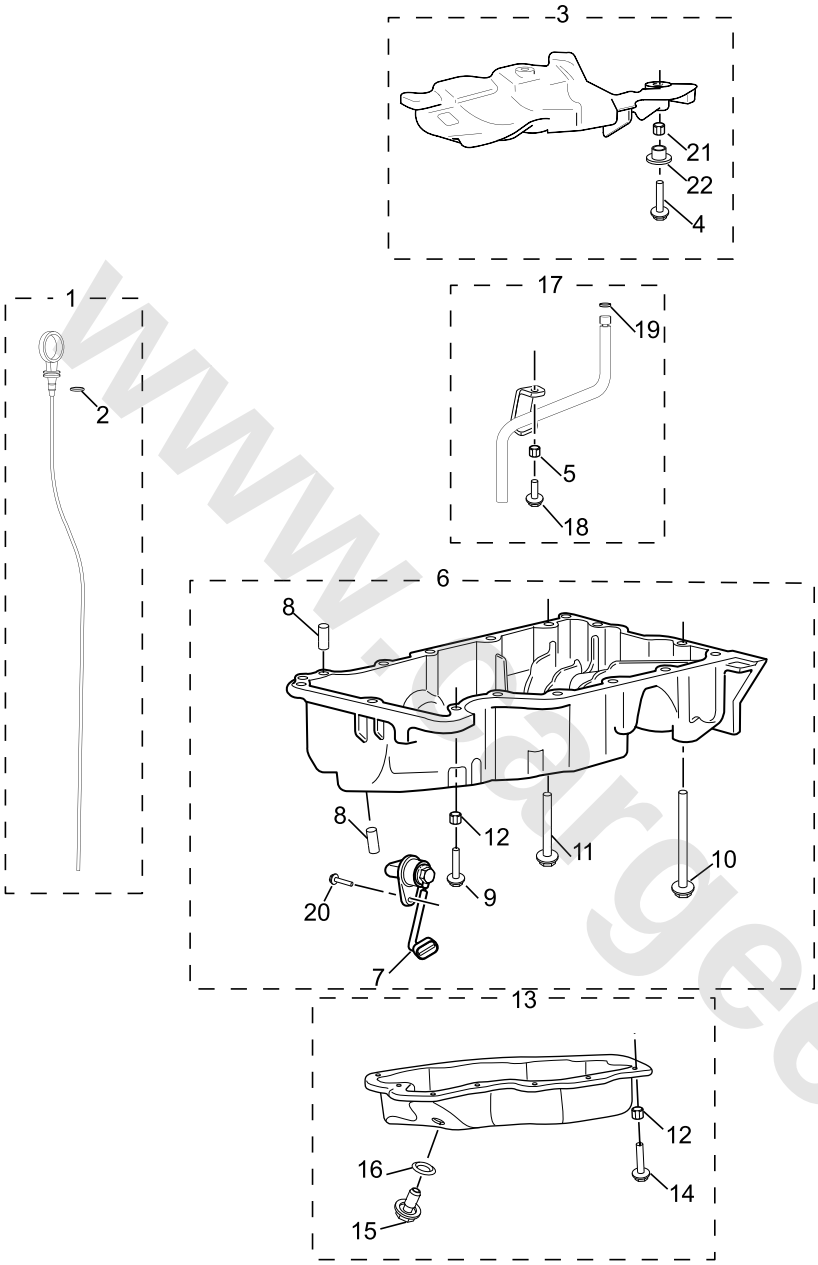

S1113147

1. Oil Level Indicator Assembly
2. O-ring - Engine Oil Scale
3. Lower Crankcase Oil Baffle Assembly
4. Bolt - Lower Crankcase Oil Baffle
5. Fixing Sleeve - Crankcase Oil Return Pipe Bolt
6. Oil Pan Assembly
7. Oil Control Valve Harness Assembly
8. Locating Pin - Oil Pan
9. Bolt - Oil Pan
10. Bolt - Oil Pan
11. Bolt - Oil Pan
12. Fixing Sleeve - Oil Pan Bolt
13. Oil Pan Assembly
14. Bolt - Oil Pan
15. Oil Pan Drain Plug Assembly
16. O-ring - Oil Pan Drain Plug
17. Crankcase Oil Return Pipe Assembly
18. Bolt - Crankcase Oil Return Pipe
19. O-ring - Crankcase Oil Return Pipe
20. Bolt - Engine Harness
21. Fixing Sleeve - Lower Crankcase Oil Baffle Bolt
22. Sleeve - Lower Crankcase Oil Baffle Bolt

www.cargeek.ir

SGE1.5T Timing Chain System Disassembled View

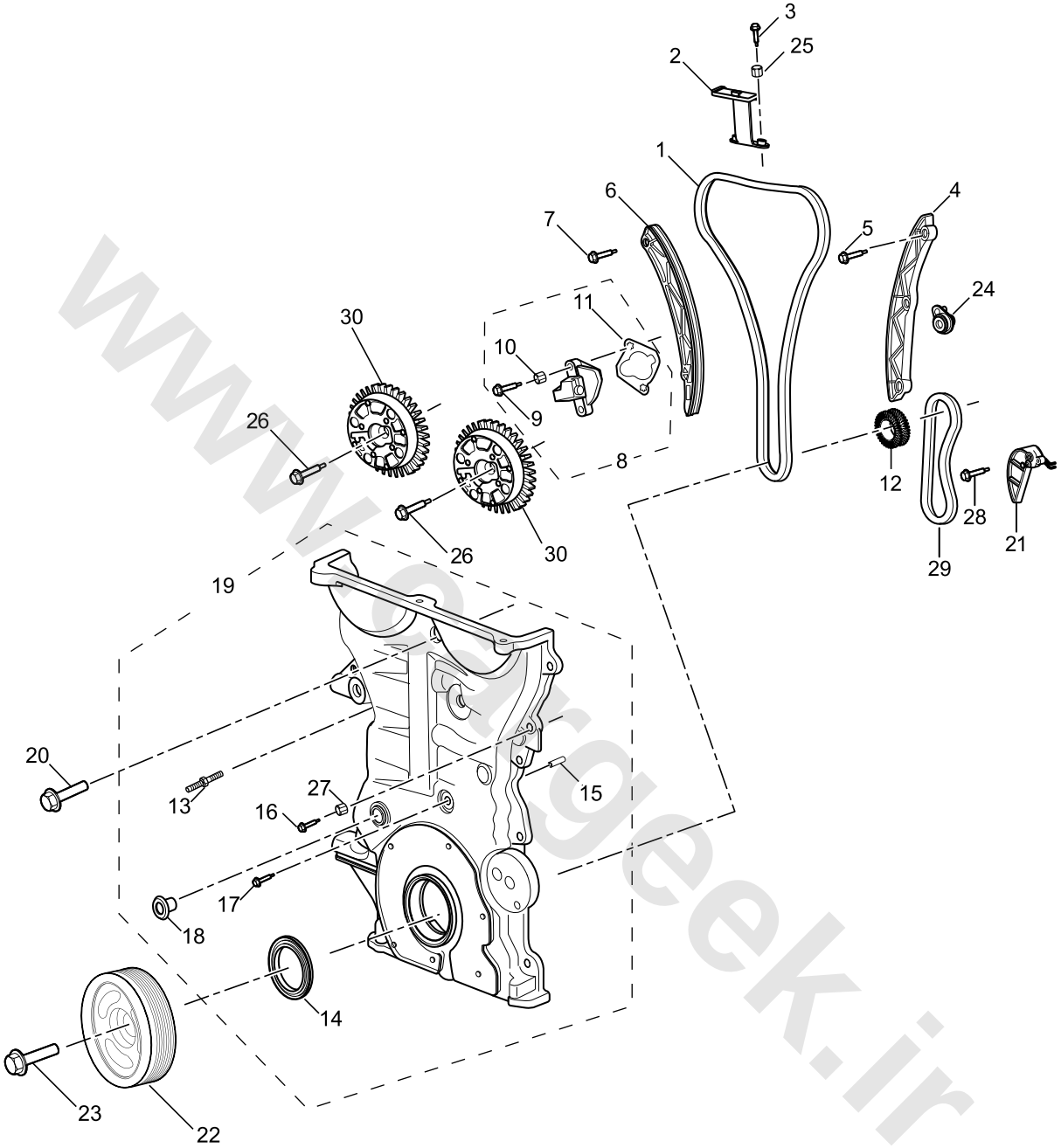

S1110126

1. Timing Chain Assembly
2. Timing Chain Guide Rail
3. Bolt - Timing Chain Guide Rail
4. Timing Chain Guide Rail
5. Bolt - Timing Chain Guide Rail
6. Timing Chain Guide Rail
7. Bolt - Timing Chain Guide Rail
8. Timing Chain Tensioner Assembly
9. Bolt - Timing Chain Tensioner
10. Fixing Sleeve - Timing Chain Tensioner Bolt
11. Washer - Timing Tensioner
12. Crankshaft Sprocket
13. Stub - Timing Chain Cover
14. Crankshaft Front Oil Seal
15. Locating pin - Timing Chain Cover
16. Bolt - Timing Chain Cover
17. Bolt - Timing Chain Cover
18. Plug - Timing Chain Cover Hole
19. Timing Chain Cover
20. Bolt - Timing Chain Cover

www.cargeek.ir

21. Oil Pump Chain Tensioner
22. Crankshaft Torsional Vibration Shock Absorber
23. Bolt - Crankshaft Sensor
24. Timing Chain Fuel Injector Assembly
25. Fixing Sleeve - Timing Chain Track Bolt
26. Bolt - Phase Modulator
27. Fixing Sleeve - Timing Chain Cover Bolt
28. Bolt - Oil Pump Chain Tensioner
29. Chain - Oil Pump
30. Camshaft Position Actuator Assembly

www.cargeek.ir

www.cargeek.ir

SGE-1.5T Intake Manifold Disassembled View

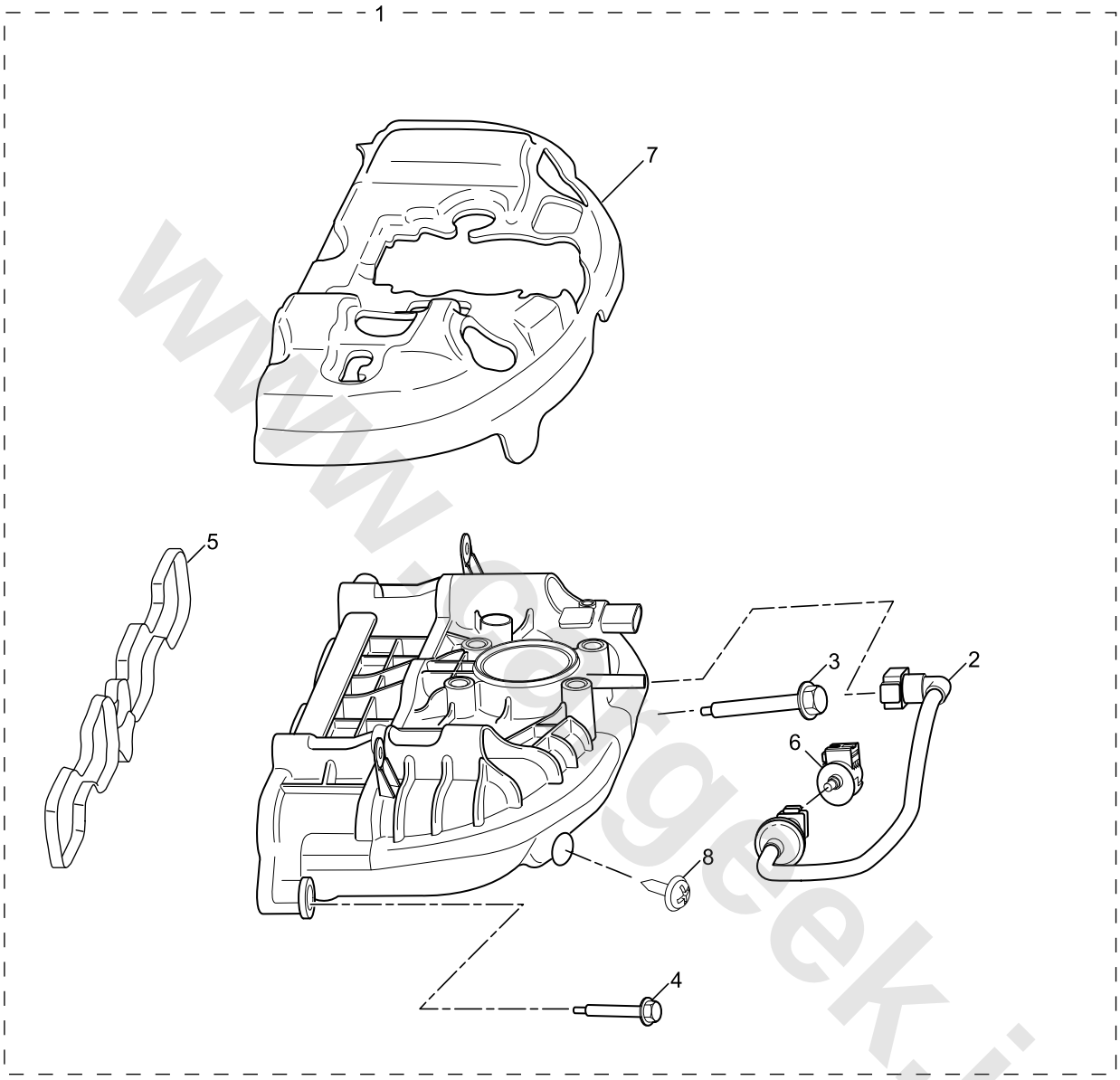

S1110127

1. Intake Manifold Assembly
2. Pipeline Assembly - Canister Solenoid to Manifold
3. Bolt - Intake Manifold
4. Bolt - Intake Manifold
5. Intake Manifold Gasket
6. Canister Solenoid Assembly
7. Intake Manifold Cover Assembly
8. Clip - Intake Manifold Noise Enclosure

www.cargeek.ir

SGE-1.5T Turbocharger Disassembled View

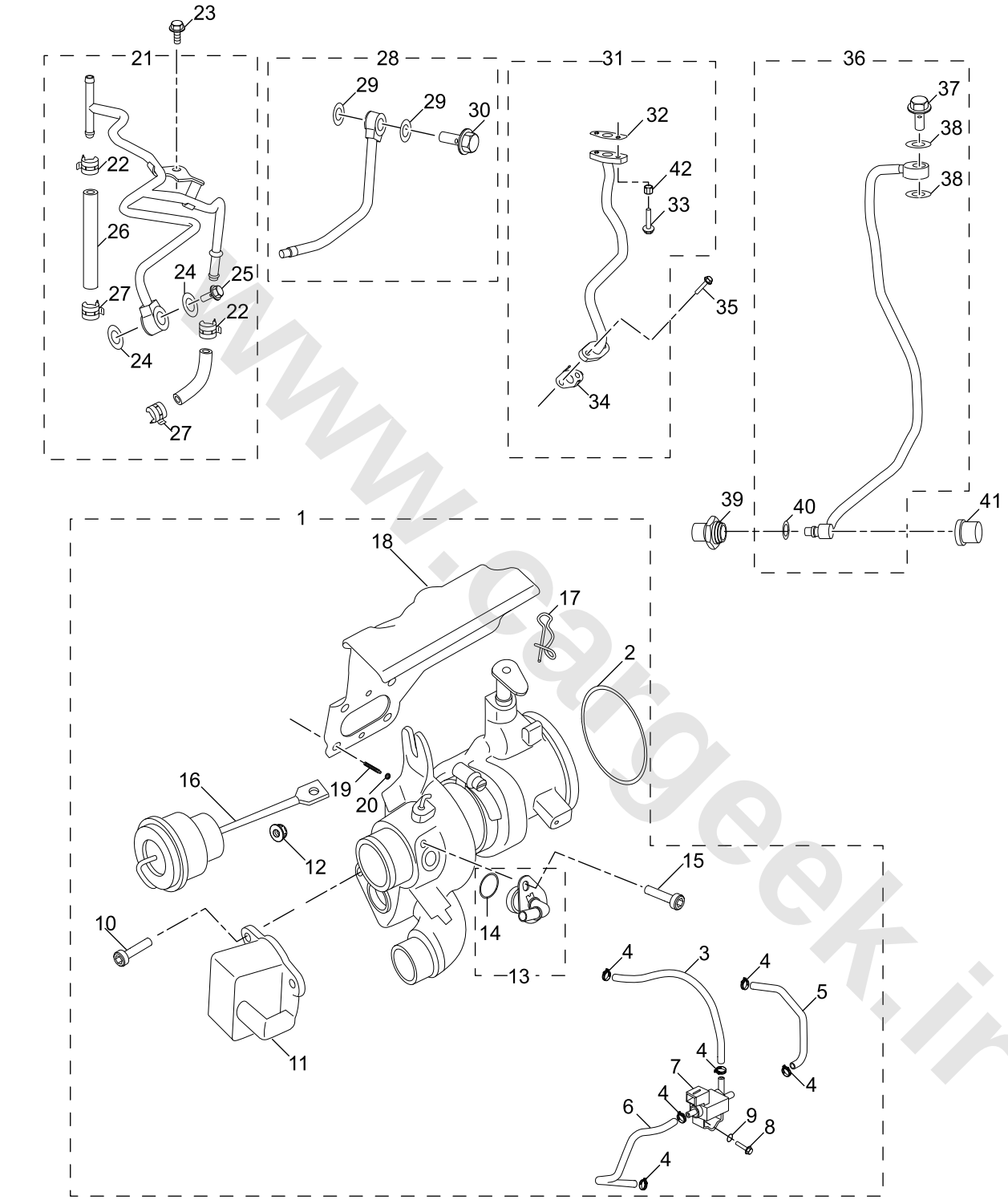

1. Turbocharger Assembly
2. Liner - Turbocharger
3. Hose - Turbocharger Electrically Controlled Bypass Valve to Release Valve Actuator
4. Pipe Clamp - Turbocharger Electrically Controlled Bypass Valve Tube
5. Tube - Turbocharger Electrically Controlled Bypass Valve to Turbocharger Inlet
6. Tube - Turbocharger Electrically Controlled Bypass Valve to Turbocharger Outlet
7. Turbocharger Electrically Controlled Bypass Valve
8. Bolt - Turbocharger Electrically Controlled Bypass Valve
9. Gasket - Turbocharger Electrically Controlled Bypass Valve
10. Bolt - Turbocharger Relief Valve
11. Turbocharger Relief Valve

www.cargeek.ir

www.cargeek.ir

12. Nut - Turbocharger Release Valve Actuator
13. Crankcase Vent Pipe Joint Assembly
14. O-ring - Crankcase Vent Pipe Joint
15. Bolt - Crankcase Vent Pipe Joint
16. Nut - Turbocharger Release Valve Actuator Assembly
17. Fixed Pin - Turbocharger Release Valve Actuator Rod
18. Turbocharger Heat Shield
19. Bolt - Turbocharger
20. Nut - Turbocharger
21. Turbocharger Water Outlet Pipe Assembly
22. Pipe Clamp - Turbocharger Water Outlet Pipe
23. Bolt - Turbocharger Water Outlet Pipe Bracket
24. Gasket - Turbocharger Coolant Pipe
25. Bolt - Turbocharger Water Outlet Pipe
26. Pipeline - Turbocharger Water Outlet To Engine Outlet
27. Pipe Clamp - Turbocharger Water Outlet Pipe
28. Turbocharger Water Inlet Pipe Assembly
29. Gasket - Turbocharger Coolant Pipe
30. Bolt - Turbocharger Water Inlet Pipe
31. Turbocharger Oil Return Pipe Assembly
32. Liner - Turbocharger Oil Return Pipe
33. Bolt - Turbocharger Oil Return Pipe
34. Liner - Turbocharger Oil Return Pipe
35. Bolt - Turbocharger Oil Return Pipe
36. Turbocharger Oil Inlet Pipe Assembly
37. Bolt - Turbocharger Oil Inlet Pipe
38. Liner - Turbocharger Oil Inlet Pipe
39. Joint - Turbocharger Oil Inlet Pipe
40. Liner - Turbocharger Oil Inlet Pipe
41. Pipe Clamp - Turbocharger Oil Inlet Pipe
42. Fixing Sleeve - Turbocharger Oil Return Pipe Bolt

www.cargeek.ir

www.cargeek.ir

www.cargeek.ir

SGE-1.5T Water Pump and Thermostat Disassembled View

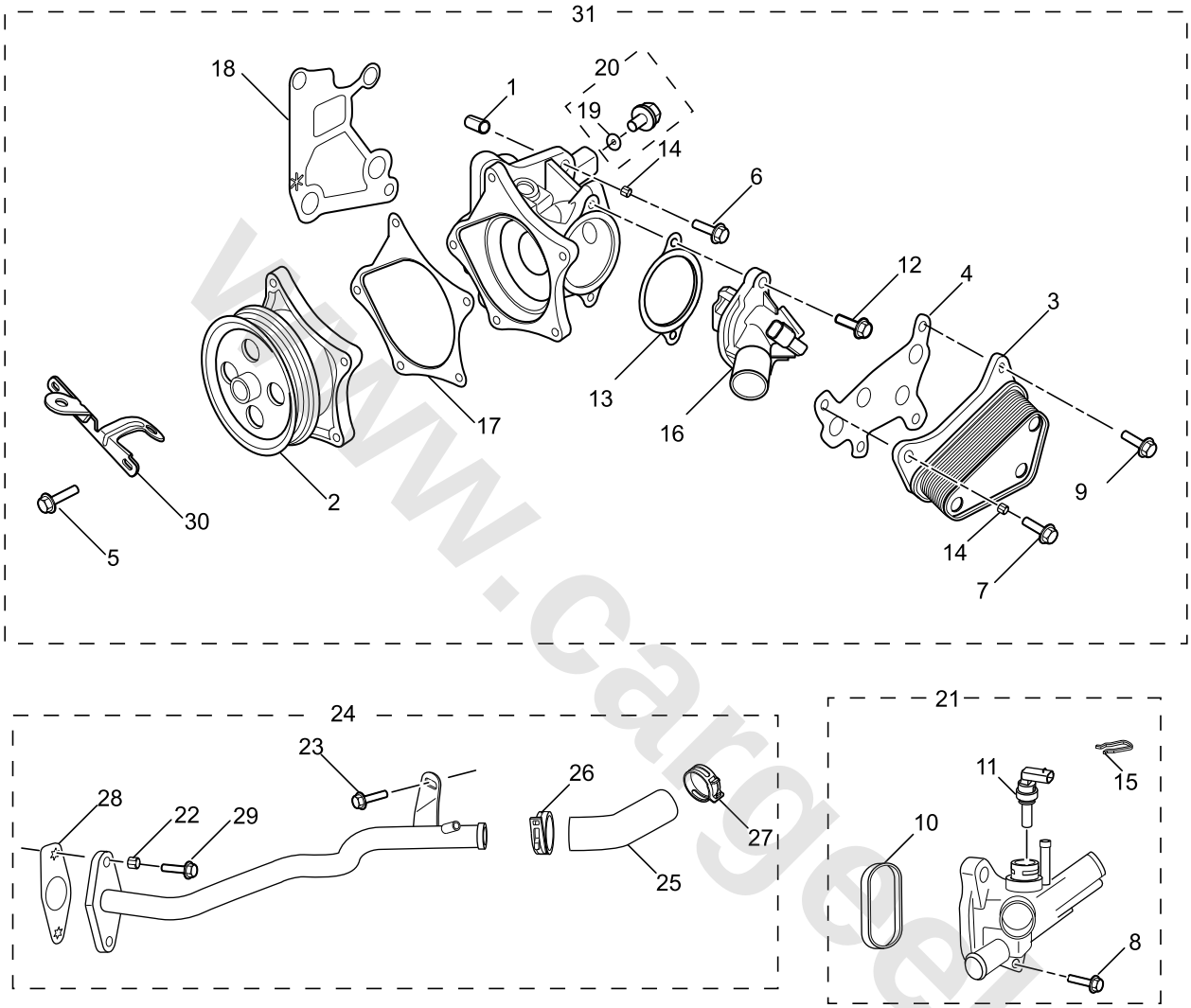

S1110129

1. Locating Pin - Coolant Pump
2. Front Water Pump Cover Assembly
3. Oil Cooler Assembly
4. Gasket - Oil Cooler
5. Bolt - Coolant Pump
6. Bolt - Water Pump Housing
7. Bolt - Water Pump Housing
8. Bolt - Engine Water Outlet
9. Bolt - Oil Cooler
10. Liner - Engine Water Outlet Pipe
11. Water Temperature Sensor Assembly
12. Bolt - Thermostat Housing
13. Thermostat Gasket
14. Fixing Sleeve - Water Pump Bolt
15. Fixing Sleeve - Engine Coolant Temperature Sensor
16. Thermostat and Housing Assembly
17. Liner - Engine Water Pump
18. Liner - Engine Water Pump
19. Liner - Turbocharger Cooling Pipe Connector
20. Turbocharger Cooling Pipe Connector
21. Engine Water Outlet
22. Fixing Sleeve - Engine Water Outlet Bolt
23. Bolt - Engine Water Outlet Pipeline
24. Pipeline Assembly - Engine Water Outlet to Water Pump
25. Pipeline - Engine Water Outlet to Water Pump
26. Pipe Clamp - Engine Water Outlet Pipeline
27. Pipe Clamp - Engine Water Outlet Pipeline
28. Gasket - Coolant Bypass Pipe
29. Bolt - Engine Water Outlet Pipeline
30. Engine Harness Bracket

www.cargeek.ir

31. Engine Water Pump Assembly

www.cargeek.ir

www.cargeek.ir

SGE－1.5T Accessory Belt System Disassembled View

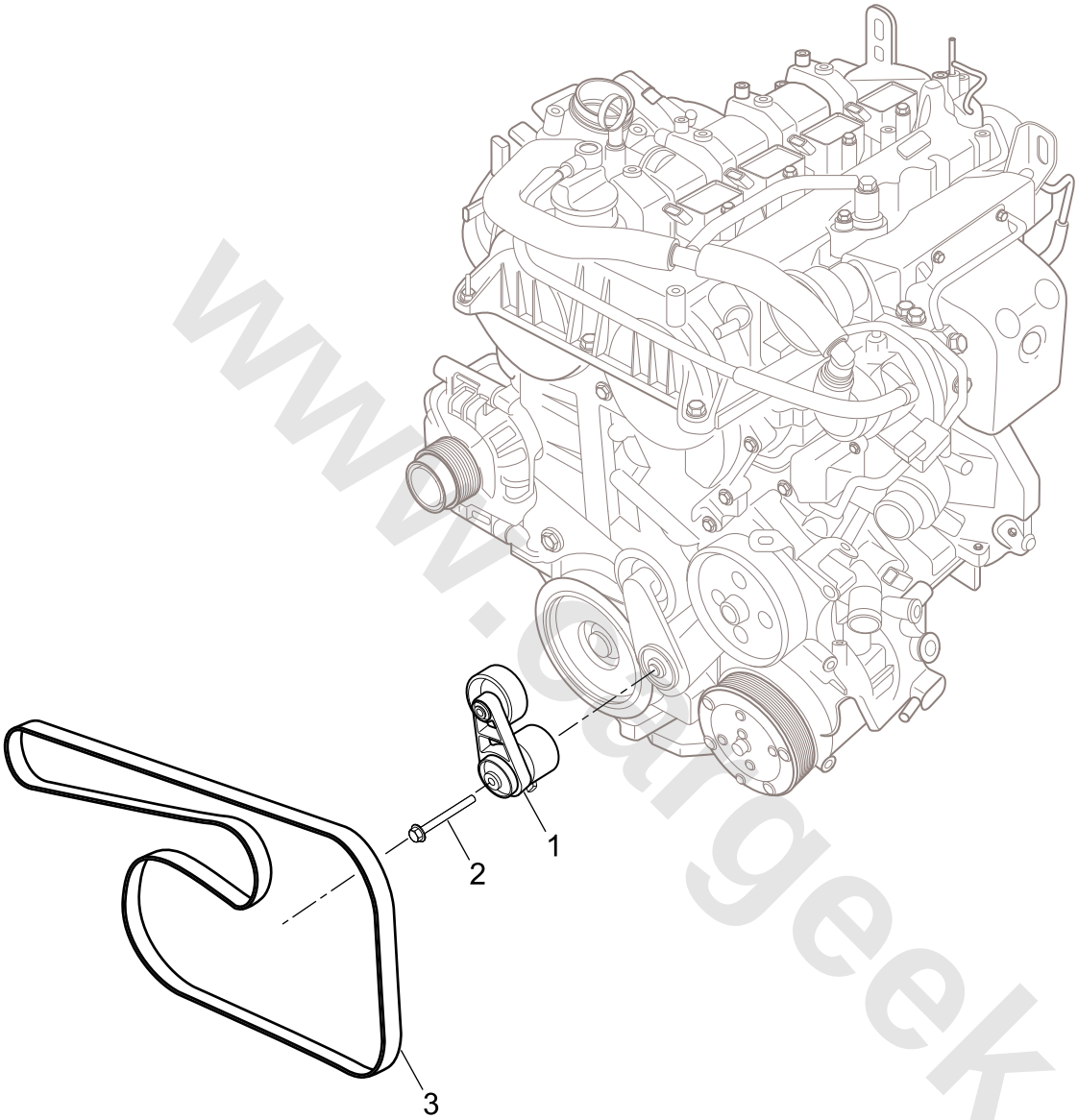

S1110130

1. Auxiliary Drive Tensioner Assembly
2. Bolt-Tensioner
3. Front Engine Belt

www.cargeek.ir

www.cargeek.ir

Description

Overview

The SGE engine features in-line 4-cylinder, 16-valve, DOHC, timing chain drive and electronically-controlled multi-point direct injection fuel injection system.

It is mainly composed of cylinder block, cylinder head, crankshaft, connecting rod and camshaft. The cylinder head is made of cast aluminum material and connected with the cylinder block through the multi-layer cylinder gaskets by using 10 high-strength bolts.

Cylinder block

The cylinder block contains a upper cylinder block and lower crankcase, this design improves the cylinder block stiffness, and reduces the manufacturing cost and vibration.

The upper cylinder block is made of aluminum alloy precision sand casting parts, with 4 cast-in-situ iron cylinder liners arranged in a straight line, high overall strength, and difficult deformation.

The lower crankcase assembly consists of lower crankcase and oil pump. The oil pump is assembled to the bottom of the crankcase, the oil passes through the oil strainer with a strainer, pressurized through the oil pump to distribute clean oil free from impurities to the main bearing and cylinder head via the main oil duct of engine body to lubricate crankshaft, connecting rod, camshaft and other parts. The mating surface of the lower crankcase and engine block is sealed with sealant and fixed by bolts.

Cylinder head

The cylinder head adopts 4 valves per cylinder structure with a spark plug mounted at the center of the combustion chamber. Due to adoption of overhead valve structure, powerful whirlpool will be formed in the combustion chamber to make the mixed gas evenly distributed, which is good for transmission of flame to improve combustion condition, so as to enhance the power performance, fuel economy and emission performance of the engine.

The camshaft drives the roller rocker, one end of the roller rocker is supported by a hydraulic tappet, and the other end is supported by a valve stem end. The valve is driven by swing arm torque. The valve clearance can be automatically compensated by the hydraulic tappet. The valve stem oil seal is press-fitted on the cylinder head oil seal seat and can be used as the valve spring seat to support the valve spring.

The exhaust valve is of a carbon deposit removal type, and the valve stem with the side machined can clean the carbon deposit at the end of valve guide and in combustion chamber so as to prevent valve seizing.

For the metal cylinder gasket in a multi-layer structure, the cylinder opening adopts a pressing ring structure, which enhances sealing at cylinder opening.

There are four oil ducts at front bearing of the camshaft, one oil inlet duct, one oil return duct and two operating oil ducts. Oil enters the oil control solenoid valve via the oil ducts. The tail end of camshaft is equipped with a camshaft signal wheel to provide signals for camshaft position sensor. A stern notch is formed in the exhaust camshaft for assembling mechanical vacuum pump.

A phase modulator is installed to the drive ends of the intake and exhaust camshafts and fixed by bolts.

Two phase modulator control valves are installed on the camshaft cover lid control valve housing and fixed with an O-ring and a bolt respectively. The control valve is a four-way proportioning valve, including an oil inlet, an oil return port and two oil ducts connected with the phase modulator working chamber.

Crankshaft

The crankshaft is a forged steel crankshaft with 8 balance blocks, and supported by 5 bush bearings. The end float is controlled by the thrust washer on the top of the main bearing shell 4. The crankshaft vibration damper is used to control torsional vibration.

The main bearing journal is in a drilled type design, the upper bearing is in a groove type design, and the oil groove offered in the upper half part of the main bearing shell supplies oil to the connecting rod big end bearing shell through the oil hole in the crankshaft.

Connecting Rod and Piston

The aluminum alloy thermal expansion piston is provided with a floating piston pin fit to the clearance of the small end of connecting rod, and both ends of the piston pin are fixed and limited by circlips. Each piston is provided with two compression rings and one oil ring.

The powder metallurgy connecting rod has an H-section structure. The big end of connecting rod moves on the bearing shell of crankshaft journal. The connecting rod adopts forging+cracking process.

Oil Pan

The oil pan consists of aluminum die casting (upper part of oil pan) and iron die casting (lower part of oil pan). An oil pump control valve connector is installed at the upper part of the oil pan, the upper part of the oil pan is fixed to the lower crankcase, connected and fixed to the transmission to provide additional structural support. The lower part of the oil pan is fixed to the upper part of the oil pan by bolts.

www.cargeek.ir

Engine Accessories

The accessories are a single 5-ribbed belt drive system driven by crankshaft pulley: to drive the water pump, alternator and A/C compressor, and tension the belt via a mechanical damping tensioner.

High pressure common rail and direct injection system

Comparing with PFI engine, the gasoline direct injection engine avoids introducing moisture to the wall of the intake port, this allows accurate calculation of the fuel, reduction of the HC emission level during cold start and improvement of the engine transient response speed.

The fuel injection system mainly includes: high pressure fuel pump, high pressure fuel pipe, fuel rail, rail pressure sensor, fuel injector.

The high pressure oil pump driven by the overhead cam pumps high pressure fuel into the fuel rail through the fuel pipe, the injector injects fuel in the rail into the cylinder at a certain pulse width, and the rail pressure sensor returns a signal of pressure in the rail to ECU which controls the pressure in the fuel rail through the high pressure fuel pump. Fuel injection system pressure is up to 20MPa. ECU controls the spray form and fuel-injection quantity by controlling the rail pressure and fuel injection pulse width to meet the requirements of different conditions for injection.

www.cargeek.ir

www.cargeek.ir

www.cargeek.ir

Operation

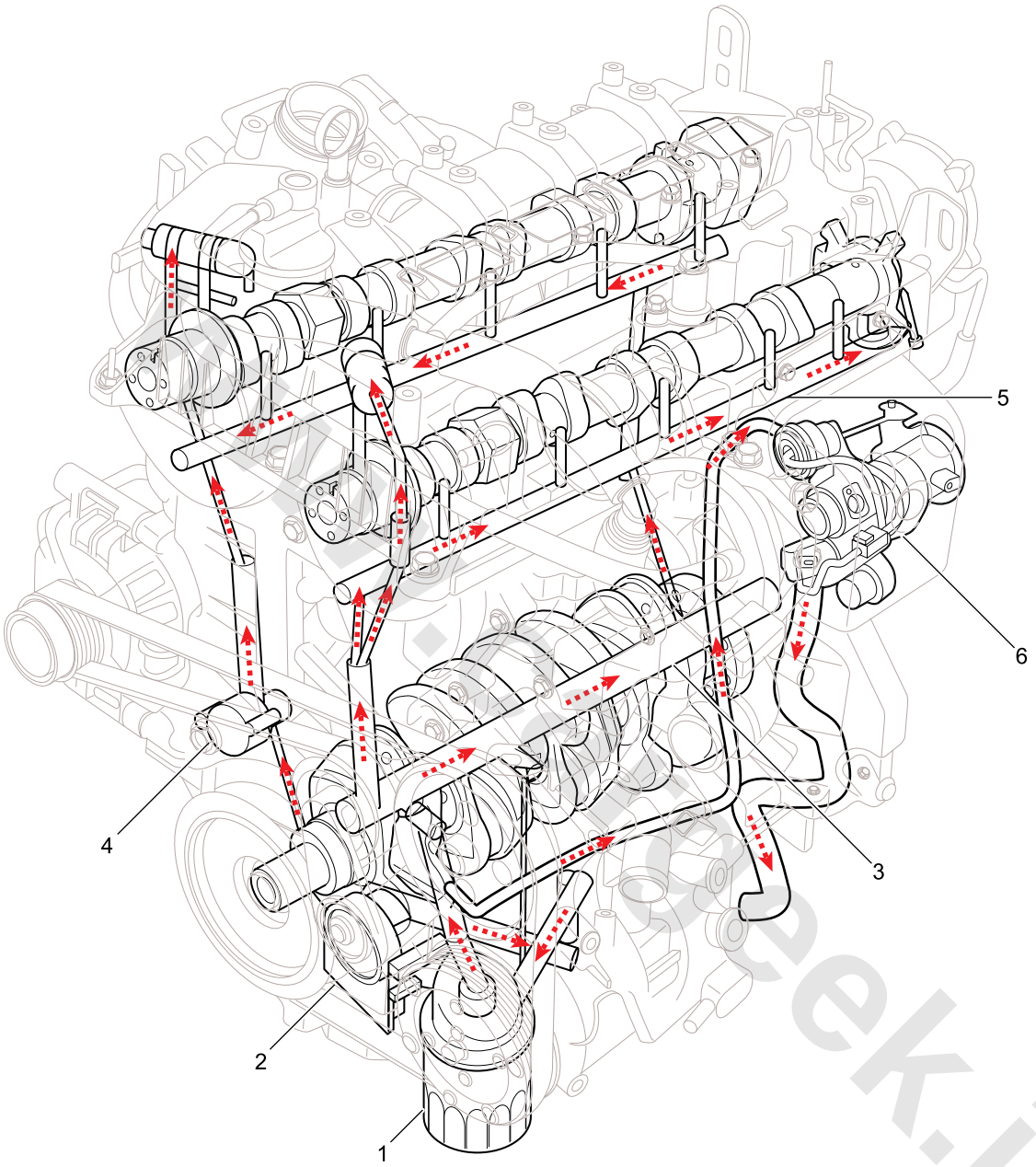

S1112002

1. Oil Filter
2. Oil Pump
3. Cylinder Block Main Oil Duct
4. Tensioner
5. Cylinder Head Main Oil Duct
6. Turbocharger

Lubrication

The lubrication system is a full-flow filtration, forced oil supply system. Oil is drawn from the oil pan through the oil strainer by the oil pump, and the strainer is equipped with a screen which can prevent impurities from entering the oil pump.

The oil pump with an oil pump control valve is driven by the crankshaft by using the chain. When the oil pressure achieves a certain value, the oil pump control valve will be opened, the excess oil returns to the oil inlet side of the oil pump, this helps to maintain the operating oil pressure within a certain range and ensure the normal operation of the engine.

Pressure oil flows out from the oil pump outlet, then enters into the oil filter through the lower crankcase oil gallery, then into the main oil gallery of engine body, oil is distributed to the crankshaft, piston cooling nozzle and timing chain cooling nozzle. The grooves around each upper main bearing supplies oil to the drilled crankshaft channel, and the connecting rod bearing is supplied with oil by the channel connecting the main journal and rod journal. The pressurized oil flows into the cylinder head through the throttle hole of the cylinder head,

www.cargeek.ir

then enters into each oil supply hole of the camshaft. The cast channel supplies oil to each hydraulic component adjuster, and the drilled channel supplies oil to the surface of each camshaft bearing. The oil flows back to the oil pan through the cast channel in the cylinder head. The timing chain lubricant is discharged into the oil pan directly. All other moving parts can be lubricated through gravity flow or splash-down. The engine oil switch is installed at the tail end.

Turbocharger

It is high temperature and high pressure exhaust gas exhausted from the engine, and the exhaust gas has a certain energy. In a naturally aspirated engine, this part of energy is often wasted with exhaust emissions. The turbocharger is an exhaust-driven component, which provides compressed air (pressurized air) to the engine cylinder block, so as to increase its volumetric efficiency, and the power source of exhaust gas turbocharger is mainly the exhaust gas. The turbine impeller and the compressor impeller are in rigid connection through the turbocharger shaft, and this part is called the turbocharger rotor. The turbocharger rotor is fixed in the turbocharger through the floating bearing (which can guarantee a smaller friction resistance torque in rotor high-speed rotation). When the engine operates, the exhausted gas impacts on the turbocharger impeller at a certain angle at a high speed, so that the turbocharger rotor rotates at a high speed (up to tens of thousands of revolutions per minute). Through high-speed rotation of the compressor impeller, the compressor draws air from the air filter and forces compressed air into the intake manifold through the intercooler, and the air pressure in the intake manifold rises to achieve the pressurization effect. So air will be exposed to greater pressure in the intake process, so that more, denser air enters the cylinder. In this way, fuel can be combusted more adequately, and the engine performance is improved.

High-pressure oil supplied from the engine provides lubrication for the bearings, and returns to the oil pan through the oil return pipe. The exhaust gas from the turbocharger goes into the three-way catalyst. The boost pressure is controlled by the exhaust valve. The exhaust valve in the turbocharger provides a bypass for the gas driven by the turbine, to limit the pressure into the engine when the output of the turbocharger exceeds the engine volume flow. The pneumatic actuator controls the exhaust valve and responds to the signals sent by the boost control solenoid valve by bypassing excessive boost pressure of the turbocharger.

Because of high temperature of the gasoline engine turbocharger, the gasoline engine turbocharger is cooled by water-cooling.

Crankcase Ventilation

In the engine working process, a small amount of combustion gas passes through the piston to enter the crankcase, which is called gas blow-by. Such gases mainly contain unburned hydrocarbon (HC), which will pollute engine oil and form overlarge crankcase pressure at high engine speed, causing oil leakage from seals and gaskets. The crankcase breather system is just used to bring such gases into the air intake system from the crankcase.

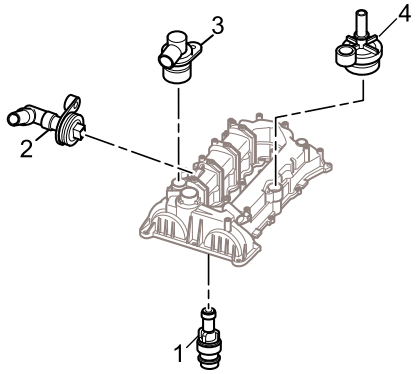

S1113757

The main channel PCV valve (check valve 1), installed in the camshaft cover lid at the engine intake side, has the cut-off function, when the turbocharger starts operating, the valve body closes the channel to prevent gas backflow. When the turbocharger does not operate, the gas in the crankcase enters into the intake manifold through the valve.

Secondary PCV valve (check valve 2) is installed at the lateral part of the camshaft cover lid at the engine intake side and connected to the turbocharger air inlet pipe and fresh air PCV valve through PCV pipes. When the crankcase pressure is greater than 1KPa, the secondary PCV valve starts operating, the valve body opens the channel and supplies excessive abnormal piston blow-by in the crankcase into the air inlet pipe through the PCV pipe to ensure crankcase pressure balance.

Turbo PCV valve (check valve 3) is installed at the top of the camshaft cover lid at the engine intake side, connected to the turbocharger air inlet through a hose, operates only under crankcase pressurization condition, and it is used to introduce separated dirty air into the turbocharger air inlet to ensure crankcase pressure balance.

Fresh air PCV valve (check valve 4) is installed at the top of the camshaft cover lid at the engine exhaust side, and connected to the turbocharger air inlet pipe and Secondary PCV valve through PCV pipes. When the crankcase pressure is less than –1KPa, the fresh air PCV valve starts operating, the valve body opens the channel for introducing filtered fresh air into the crankcase to ensure crankcase pressure balance.

www.cargeek.ir

Diagnostic

Symptoms - Engine Mechanical System

Visual/Appearance Inspection

- Check if there are any aftermarket add-on devices that may affect engine operation.
- Check the easily accessible or visible system components for any obvious damage or failure that may cause the symptom.
- Check if the oil level, oil viscosity and filter application are correct.
- Confirm the exact operation conditions when failure occurs. Note factors such as engine RPM, ambient temperature, engine temperature, engine warm-up time and other specifics.
- Compare the engine sound with that of a known good engine and check if the current condition is normal (if applicable).

Intermittent Failure

Under the same condition as described by the customer, test the vehicle for normal operation.

Symptom List

Refer to the diagnostic procedures in the table below when diagnose the symptoms:

- Engine misfires, and no internal noise.
- Engine misfires, and abnormal noise is found below the internal engine.
- Engine misfires, and there is abnormal noise in the valve system
- Engine misfires, and coolant is consumed.
- Engine misfires and excessive oil consumption occurs.
- Noise occurs when the engine starts, but lasts only several seconds
- Upper engine noise occurs （irrelevant to engine speed）.
- Noise under engine occurs （irrelevant to engine speed）.
- Engine makes noise when loading.
- Engine Unable to Start – Crankshaft Not Rotate
- Ingress of Coolant into Combustion Chamber
- Ingress of Coolant into Engine Oil
- Engine Compression Pressure Test
- Cylinder Leak Test
- Oil Consumption Diagnosis
- Engine Oil Pressure Diagnosis and Test
- Oil Leak Diagnosis
- Crankcase Ventilation System Check/Diagnosis
- Drive Belt Chirp, Squeal and Whine Diagnosis
- Drive Belt Boom and Vibration Diagnosis
- Diagnosis for Drive Belt Detachment and Excessive Abrasion
- Drive Belt Tensioner Diagnosis

www.cargeek.ir

www.cargeek.ir

Engine Misfire, and No Internal Noise

Cause	Measures
Abnormal accessory drive belt, serious crack, bulge or partial missing Any abnormal accessory drive system or components can lead to engine speed change and misfire DTC. The misfire DTC may also occur when there is actually no misfire fault.	Replace the drive belt.
Wear, damage and misalignment of the accessory drive parts or excessive pulley runout may result in engine misfire DTCs. The misfire DTC may also occur when there is actually no misfire fault.	Check the component, repair or replace it if necessary.
Engine flywheel looseness or improper installation The misfire DTC may also occur when there is actually no misfire.	If necessary, repair or replace the flywheel.
Exhaust System Obstruction When exhaust airflow is seriously clogged, it will lead to a significant reduction in engine performance, and a DTC may be set. Possible causes for the obstruction include pipeline collapse or depression, muffler or catalytic converter blockage.	Repair and replace the parts when necessary.
Vacuum hose improperly fitted or damaged	Repair and replace the parts when necessary.
The seal between the intake manifold and the cylinder head/throttle body is incorrect.	Replace the intake manifold, gasket, cylinder head or throttle body if necessary.
Intake manifold absolute pressure sensor is improperly fitted or damaged The seal ring of intake manifold absolute pressure sensor shall not be torn or damaged.	Repair or replace the intake manifold absolute pressure sensor if necessary.
Intake Manifold Absolute Pressure Sensor Housing Damage	Replace the intake manifold.
Rocker arm wear or looseness Rocker arm bearing end cap or needle roller bearing shall be in good condition and correct position.	Replace the valve rocker if necessary.
The valve is stuck. If carbon deposits on the valve stem, the valve cannot switch off properly.	Repair and replace the parts when necessary.
Excessive Wear or Misalignment of Timing Chain	Replace the timing chain and sprocket if necessary.
Camshaft Lobe Wear	Replace the camshaft and valve lash adjuster.
High oil pressure High lubrication system oil pressure may cause excessive pump oil and compression pressure loss of the valve tappet.	• Test the oil pressure. ☞ **Oil Pressure Diagnosis and Test** • Repair or replace the oil pump if necessary.
Cylinder head gasket failure or cylinder head and engine cylinder block cooling channel crack or other damages Coolant consumption does not necessarily lead to engine overheating.	• Check whether the spark plug is filled with coolant. • Check the cylinder head, engine cylinder block or cylinder head gasket. • Repair and replace the parts when necessary.

www.cargeek.ir

Cause	Measures
Piston ring wear Oil consumption does not necessarily result in engine misfire.	• Check the spark plug for oil. • Check whether the cylinder compression pressure is lowered. ☞**Engine Compression Pressure Test** • Perform cylinder leakage and compression test to identify the failure cause. • Repair and replace the parts when necessary.
Crankshaft variable reluctance rotor damage Crankshaft variable reluctance rotor damage may cause different symptoms, depending on the extent of damage and position. • The system with electronic communication, direct ignition system or ignition coil (each cylinder) and magnetic reluctance ring seriously damaged may show periodic loss of crankshaft position, signal transmission stop, and then resynchronize the crankshaft position. • For systems with the electronic communication, direct ignition system or ignition coil (for each cylinder), a slightly damaged magnetic reluctance ring may not lead to missing crankshaft position and engine misfire. However, **DTC** P0300 may be set. • For systems with mechanical communication and high voltage switch, a seriously damaged variable reluctance ring may lead to additional pulse, affect fuel and spark transfer, until **DTC** P0300 or P0336 occurs.	Replace the sensor or crankshaft if necessary.

www.cargeek.ir

Engine Misfire, and Abnormal Noise Found Below Internal Engine

Cause	Measures
Abnormal, seriously cracked, bumped or partially lost accessory drive belt Abnormal accessory drive system or components may result in engine speed change and the noise similar with that when the lower engine fails, which may also lead to misfire. The misfire DTC may also occur when there is actually no misfire fault.	Replace the drive belt.
Accessory drive component is worn, damaged, misaligned or excessive pulley runout. The misfire DTC may also appear when no misfire failure actually occurs.	Check the component, repair or replace it if necessary.
Engine flywheel looseness or improper installation The misfire DTC may also occur when there is actually no misfire.	If necessary, repair or replace the flywheel.
Piston ring wear Oil consumption does not necessarily result in engine misfire.	• Check the spark plug for oil deposit. • Check whether the cylinder compression pressure is lowered. ☞ **Engine Compression Pressure Test** • Perform cylinder leak and compression test to identify the failure cause. • Repair and replace the parts when necessary.
Crankshaft thrust bearing is worn Excessive wear of the crankshaft thrust surface or the thrust surface of the thrust bearing may lead to the forward and backward movement of the crankshaft, and thereby generates DTC when no misfire failure actually occurs.	Replace the crankshaft and bearing if necessary.

www.cargeek.ir

Engine Misfire, and Abnormal Noise Found in Valve System

Cause	Measures
Rocker Arm Worn or Loose Rocker arm bearing end cap or needle bearing shall be in perfect condition (in rocker arm assembly).	Replace the valve rocker if necessary.
The valve is stuck. If carbon deposits on the valve stem, the valve cannot switch off properly.	Repair and replace the parts when necessary.
Excessive Wear or Misalignment of Timing Chain	Replace the timing chain and sprocket if necessary.
Camshaft Lobe Wear	Replace the camshaft and valve lash adjuster.
The valve tappet is stuck	Make replacements when necessary.
Camshaft Position Actuator Failure - Incorrect Oil Viscosity or Contaminated Oil.	1. Confirm if the engine oil pressure is normal. If it is low, check the bottom of the oil filter for oil return function. ☞**Engine Oil Pressure Diagnosis and Test** 2. The noise source is identified as a specific camshaft position actuator. Disconnect the electrical connector from the camshaft position actuator solenoid valve and start the vehicle. If the noise disappears, repeat the procedure and limit it to an independent actuator. ☞**Camshaft Phase Adjustment Actuator Replacement**

www.cargeek.ir

www.cargeek.ir

Engine Misfire with Coolant Consumption

Failure Cause	Measures
Cylinder head gasket failure or cracking or other damages to the cylinder heads and engine block cooling system passages. Coolant consumption may or may not cause the engine to overheat.	• Check whether the spark plugs are saturated by coolant. • Perform a cylinder leakage test. • Inspect the cylinder heads and engine block for damage to the coolant passages or cylinder head gasket failure. • Repair or replace as necessary.

www.cargeek.ir

www.cargeek.ir

Engine Misfire with Excessive Oil Consumption

Failure Cause	Measures
Worn valves, valve guides or valve stem oil seals	• Check the spark plugs for oil deposits. • Repair or replace as necessary.
Worn piston rings Oil consumption does not necessarily result in engine misfire.	• Check the spark plugs for oil deposits. • Check whether the cylinder compression pressure is lowered. ☞Engine Compression Pressure Test • Perform cylinder leakage and compression test to identify the failure cause. • Repair or replace as necessary.

www.cargeek.ir

www.cargeek.ir

www.cargeek.ir

Engine Noise on Start-Up, but Only Lasting a Few Seconds

Failure Cause	Measures
Improper Oil Filter (without Anti-return Function)	Fit a correct oil filter.
Incorrect Oil Viscosity	• Drain the oil. • Use the oil with correct viscosity.
Valve Lash Adjuster Leaked too Fast	Replace the lash adjuster when necessary.
Worn crankshaft thrust bearing	• Check the thrust bearing and crankshaft. • Repair or replace as necessary.
Damaged or faulty oil filter bypass valve	• Check if the oil filter bypass valve can work properly. • Repair or replace as necessary.
Camshaft Position Actuator Failure - Incorrect Oil Viscosity or Contaminated Oil.	1. Confirm that the oil pressure is normal. If it is too low, check the bottom of the oil filter for oil return function. ☞**Oil Pressure Diagnosis and Testing** 2. The noise source is identified as a specific camshaft position actuator. Disconnect the electrical connector from the camshaft position actuator solenoid valve and start the vehicle. If the noise disappears, repeat the procedure to restrict it to an independent actuator. ☞**Camshaft Phase Adjustment Actuator Replacement**

www.cargeek.ir

www.cargeek.ir

Upper Engine Noise, Regardless of Engine Speed

Failure Cause	Measures
Low Oil Pressure	• Perform the oil pressure test. ☞**Oil Pressure Diagnosis and Testing** • Repair or replace as necessary.
Worn valve rocker arm	Replace the valve rocker arm.
Valve Rocker Arm Improperly Lubricated	Check the following components, repair or replace when necessary: • Valve Rocker Arm • Valve Tappet • Oil Filter Bypass Valve • Oil pump and oil pump screen • Engine block oil duct
Broken valve spring	Replace the valve spring.
Valve Lash Adjuster Worn or Dirty	Replace the valve lash adjuster.
Timing chain stretched or fractured or sprocket tooth damaged	Replace the timing chain and sprocket.
Timing Chain Tensioner Worn, Damaged or Failed	Tensioner Replacement
Engine cam lobe worn	• Check the cam lobe of the engine. • Replace the camshaft and valve lash adjuster when necessary.
Valve guide or valve stem worn	Check the following components, repair or replace when necessary: • Valve • Valve guide
Valve stuck Carbon deposition at valve stem or valve seat may lead to the fact that the valve being stuck in opening position.	Check the following components, repair or replace when necessary: • Valve • Valve Guide

www.cargeek.ir

Lower Engine Noise, Regardless of Engine Speed

Failure Cause	Measures
Low oil pressure	• Perform the oil pressure test. ☞Oil Pressure Diagnosis and Testing • Repair or replace defective components as necessary.
Accessory drive component wear - Abnormal conditions, such as severe crack, swell or partial absence of the accessory drive belt and/or system part misalignment occur	• Check the accessory drive system. • Repair or replace as necessary.
Loose or damaged crankshaft balancer	• Check the crankshaft balancer. • Repair or replace as necessary.
Detonation or ignition knock	Check whether the ignition system operates normally.
Loose torque converter bolts	• Check the torque converter bolts and flywheel. • Repair or replace as necessary.
Loose or damaged flywheel	Repair or replace the flywheel.
Damaged oil pan touching oil pump screen - A damaged oil pan may result in wrong location of the oil pump screen, preventing the oil from flowing to the oil pump properly.	• Check the oil pan. • Check the oil pump screen. • Repair or replace as necessary.
Oil pump screen Loosened, damaged or blocked	• Check the oil pump screen. • Repair or replace as necessary.
Large gap between piston and cylinder	• Check the piston and cylinder hole. • Repair when necessary.
Large gap between piston pin and pin hole	• Check the piston, piston pin and connecting rod. • Repair or replace as necessary.
Large connecting rod bearing clearance	Check the following components, repair as necessary: • Connecting Rod Bearing • Connecting Rod • Crankshaft • Crankshaft Journal
Large crankshaft bearing clearance	Check the following components, repair as necessary: • Crankshaft Bearing • Crankshaft Journal
The piston, piston pin and connecting rod are improperly fitted - When fitting the piston, the mark or groove at the top of the piston must face the front of the engine. The piston pin shall be located in the center of the connecting rod pin hole.	• Confirm that the piston, piston pin and connecting rod are fitted properly. • Repair when necessary.

www.cargeek.ir

Engine Noise Under Load

Failure Cause	Measures
Low oil pressure	• Perform the oil pressure test. ☞**Oil Pressure Diagnosis and Testing** • Repair or replace as necessary.
Detonation or ignition knock	Confirm that the ignition system operates normally.
Loose torque converter bolts	• Check the torque converter bolts and flywheel. • Repair when necessary.
Flywheel cracking, automatic transmission	• Check the flywheel bolts and flywheel. • Repair when necessary.
Large connecting rod bearing clearance	Check the following components, repair as necessary: • Connecting Rod Bearing • Connecting Rod • Crankshaft
Large Crankshaft Bearing Clearance	Check the following components, repair as necessary: • Crankshaft Bearing • Crankshaft journal • Crankshaft bearing hole of cylinder block
Camshaft position actuator failure - Incorrect oil viscosity or contaminated oil	1. Confirm that the oil pressure is normal. If it is too low, check the bottom of the oil filter for oil return function. ☞**Oil Pressure Diagnosis and Testing** 2. The noise source is identified as a specific camshaft position actuator. Disconnect the electrical connector from the camshaft position actuator solenoid valve and start the vehicle. If the noise disappears, repeat the procedure to restrict it to an independent actuator. ☞**Camshaft Phase Adjustment Actuator Replacement**

www.cargeek.ir

Engine Unable to Start - Crankshaft Not Rotate

Failure Causes	Measures
Accessory drive system component stuck	Remove the accessory drive belt.Rotate the crankshaft at the balancer or flywheel position by hand.
Cylinder blocked by hydraulic pressure • Coolant/antifreeze found in cylinder • Oil found in cylinder • Fuel found in cylinder	Remove the spark plug and check if there is any fluid on it. • Check the cylinder head gasket for break. • Check the engine cylinder block or cylinder head for cracking. • Check if the injector has got stuck. • Check the cylinder wall for cracking.
Automatic Transmission Torque Converter Stuck	Remove the torque convertor bolt.Rotate the crankshaft at the balancer or flywheel position by hand.
Timing Chain or Gear Broken	• Check the timing chain and gear. • Repair when necessary.
Balance Shaft Gets Stuck	• Check the balance shaft. • Repair when necessary.
Foreign material enters into cylinder • Valve broken • Piston material • Foreign materials • Cylinder wall cracked	• Check the cylinder for damaged parts and/or foreign materials. • Check if the cylinder wall falls off. • Repair and replace the parts when necessary.
Crankshaft or Connecting Rod Bearing Gets Stuck	• Check the crankshaft and connecting rod bearings. • Check if the cylinder wall falls off. • Repair when necessary.
Connecting Rod Bent or Fractured	• Check the connecting rod. • Repair when necessary.
Crankshaft Cracked	• Check the crankshaft. • Repair when necessary.

www.cargeek.ir

www.cargeek.ir

Ingress of Coolant into Combustion Chamber

Failure Causes	Measures
Definition: If excessive white smoke or gas smelt of coolant is drained from the exhaust pipe, it indicates that coolant may enter into the combustion chamber.Low coolant level, cooling fan or thermostat failure may lead to "High Temperature" and cause engine component damage. 1. If the engine speed is lower than the normal value, it indicates that the coolant may enter into the combustion chamber. ☞**Engine Fails to Start- Crankshaft Unable to Rotate** 2. Remove the spark plug and check the spark plug or cylinder for any coolant. 3. Check it by carrying out the cylinder leakage test.During such test, if excessive bubbles have been found in the coolant, it may indicate the gasket failure or component damage. 4. Check it by carrying out the cylinder compression pressure test.When the compression pressure of two adjacent cylinders in engine cylinder block is too low, it indicates that the cylinder head gasket may be damaged. ☞**Engine Compression Pressure Test**	
Cylinder Head Gasket Failure	Replace the cylinder head gasket and components when necessary. ☞**Cylinder Head Check** ☞**Cylinder Head Replacement**
Cylinder Head Warping	Replace the cylinder head and gasket. ☞**Cylinder Head Check**
Cylinder Head Cracked	Replace the cylinder head and gasket.
Cylinder Sleeve Cracked	Replace the components if necessary.
Pore found on cylinder head or cylinder block	Replace the components if necessary.

www.cargeek.ir

Ingress of Coolant into Engine Oil

Failure Causes	Measures
Definition: If the engine oil is foam-like, discolored or excessively refilled, it indicates that coolant may enter into the engine crankcase.If the coolant level is low, the cooling fan does not work or the thermostat fails, the temperature may rise,which causes damage to the engine parts.The contaminated engine oil and oil filter shall be replaced. 1. Check the oil for excessive bubbles or excessive refilling.The engine oil diluted by coolant may be unable to lubricate the crankshaft bearing properly,and may lead to component damage. ☞**Noise under Engine, and Irrelevant to Engine Speed** 2. Check it by carrying out the cylinder leakage test.During such test, if excessive bubbles have been found in the cooling system, it may indicate the gasket failure or component damage. 3. Check it by carrying out the cylinder compression pressure test.When the compression pressure of two adjacent cylinders is too low in engine cylinder block, it indicates that the cylinder head gasket may be damaged. ☞**Engine Compression Pressure Test**	
Cylinder Head Gasket Failure	Replace the cylinder head gasket and components when necessary. ☞**Cylinder Head Check** ☞**Cylinder Head Replacement**
Cylinder Head Warping	Replace the cylinder head and gasket. ☞**Cylinder Head Check**
Cylinder Head Cracked	Replace the cylinder head and gasket.
Cylinder Sleeve Cracked	Replace the components if necessary.
Pore found on cylinder head or cylinder block	Replace the components if necessary.

www.cargeek.ir

Engine Compression Pressure Test

1. If the battery is not fully charged, charge it.
2. Disable the ignition system.
3. Disable the fuel injection system.
4. Remove all spark plugs.
5. Place the ignition switch in "ON" position.
6. Depress the accelerator pedal to keep the throttle fully open.
7. The compression pressure gauge gets started at zero position, and then starts the engine after 4 compression/expansion strokes.
8. Measure the compression pressure of each cylinder and record the reading.
9. If there is one cylinder with a too low compression pressure, inject about 15 **mL** engine oil through the spark plug hole into combustion chamber, and then remeasure the compression pressure and record the reading.
10. The minimum compression pressure of any cylinder should be no less than 70% of the maximum value, and the pressure reading of any cylinder shall be no less than 690**kPa**. For example, if the maximum pressure of any cylinder is 1035 **kPa**, then the allowable minimum pressure of other cylinders should be 725 **kPa** (1035×70%=725).

- Normal - For each cylinder, the compression pressure shall be augmented to its specified value in a rapid and steady manner.
- Piston ring leakage - The compression pressure of the first stroke is too low, and during the subsequent strokes, the compression pressure increases but fails to reach the normal level. Refill the engine oil, the compression pressure will be notably increased.
- Valve leakage - The compression pressure of the first stroke is too low, and the compression pressure will not increase in the following strokes. Refill the engine oil, and the compression pressure will increase not much.
- If the compression pressure of two adjacent cylinders is lower than the normal level, and the compression pressure will not increase by injecting oil to the cylinder, the cylinder head gasket may leak.

Cylinder Leak Test

Caution: To inspect the leakage of the cylinder/combustion chamber, leakage test may be required.If the leakage is serious, one or more faults may exist:

- ***Valve wearing or burnt***
- ***Valve spring broken***
- ***Valve tappet seized***
- ***Valve clearance/adjustment improper***
- ***Piston wearing***
- ***Piston ring wearing***
- ***Cylinder hole wearing or damage***
- ***Cylinder head cushion damaged***
- ***Cylinder head crack or damaged***
- ***Engine cylinder crack or damaged***

Warning: Before repairing any electrical parts, ignition and start switch must be turned to OFF or LOCK and all the electrical load must be turned off unless otherwise specified in the procedure. Disconnect the cathode cable of the battery to prevent the tool or equipment from contacting the exposed electrical terminal to generate spark. Failure to follow the safety instructions may cause personal injury and/or damage to the vehicle or parts.

1. Disconnect the battery negative.
2. Remove the spark plug.

☞**Spark Plug Remove**

3. Turn the crankshaft, place the cylinder piston under test to the top dead center of compression stroke (**TDC**).
4. Fit the cylinder head leakage tester or equivalent.

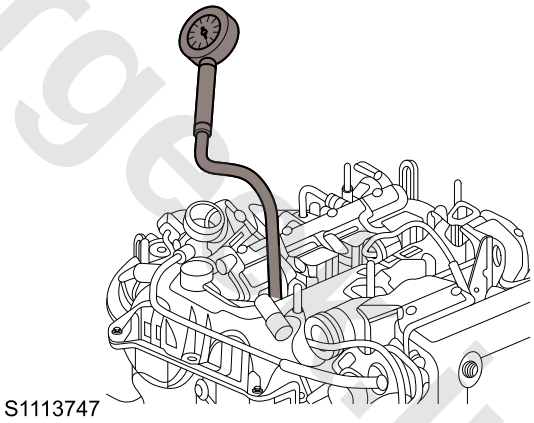

5. Apply the workshop compressed air pressure to cylinder head leakage tester, and make adjustment according to the manufacturer's instructions.

Caution: The crankshaft balance tester bolt may be tightened to prevent the engine operation.

6. Record the cylinder leakage value. If the cylinder leak is more than 25%, it shall be deemed as excessive leakage, and the component may need repair. In case of excessive leakage, check for the following conditions:

- If the throttle body or intake hose sounds of air leakage, it indicates that the throttle may be worn, burnt or the throttle spring is cracked.
- If the exhaust system tail pipe sounds of air leakage, it indicates that the exhaust valve may be worn, burnt or the exhaust valve spring is cracked.

www.cargeek.ir

- If the crankcase, dipstick conduit or oil filling pipe sounds of air leakage, it indicates that the piston ring is worn, the piston is damaged, the cylinder bore is worn or scratched, the engine cylinder block is damaged or the cylinder head is damaged.
- When there are bubbles in the cooling system, it indicates that the cylinder head or cylinder head gasket may be damaged.

7. Perform a leak test on the remaining cylinders and record the values.

www.cargeek.ir

www.cargeek.ir

Oil Consumption Diagnosis

Excessive oil consumption caused by non-leakage factors refers to the situation where an amount of 0.6 **L** engine oil or more is consumed within 1000 **km**. The causes of excessive oil consumption are as follows:

- Oil leak.

  Tighten the bolt, replace the gasket and oil seal when necessary.

- Oil level is incorrect or the oil dipstick reading is incorrect.

  With the vehicle parked on level ground, wait long enough for oil return, and check the oil level.

- Engine oil viscosity is inadequate.

  According to local temperature, apply the recommended oil with a viscosity of **SAE**.

- Continuous high speed driving and overuse
- Crankcase ventilation system barrage or component failure
- Valve guide pipe or valve stem oil seal is worn, or the seals is deficient.
- The piston ring is broken, improperly fitted, worn or wrongly located, wait long enough to allow the piston ring to be in place. If necessary, replace the broken or worn piston ring.
- The piston is fitted or aligned improperly.

www.cargeek.ir

www.cargeek.ir

Engine Oil Pressure Diagnosis and Test

1. Park the vehicle on a level surface, wait long (2–3 **Min**) enough to allow the oil to flow down and check if the oil level is low.

   Engine oil of recommended grade shall be refilled. Refill the crankcase until the oil reaches the MAX mark on the dipstick.

2. Warm up the engine, and confirm that there is no indication of "too low pressure" or "no oil pressure" on the vehicle instrument or indicator lamp.

   Listen whether there is valve train noise or knock.

3. Check for the following conditions:
   - The oil filer with return oil prevention function and the O-ring on filter cylinder block side are normal.
   - Oil diluted by water or unburnt fuel mixture
   - Oil viscosity not applicable to expected temperature
   - Oil pressure transmitter incorrect or failed
   - Oil pressure gauge incorrect or failed
   - Oil filter blockage
   - Oil bypass valve failure
4. Disconnect the battery negative cable.
5. Remove the starter motor.
6. Remove the engine oil pressure sensor.
7. Fit the special tools **TEN00080** and **T10001**.

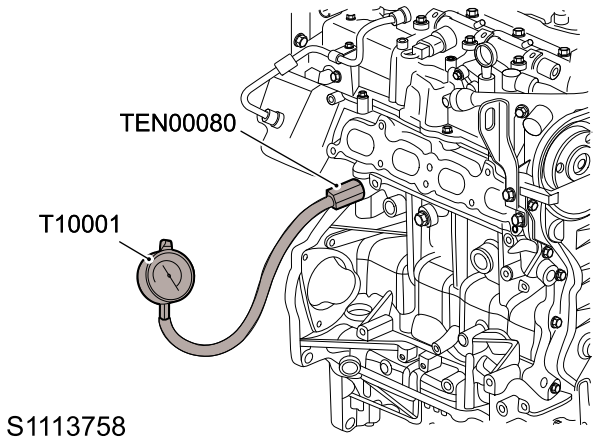

8. Fit the starter motor.
9. Connect the battery negative cable.
10. Start the vehicle, the oil pressure must be 200-480KPa at idle speed.
11. If the pressure of the engine oil is below the specified value, check the engine for one or more of the following situations:
    - Oil filter and filter cylinder block side O-ring missing or damaged
    - Worn or contaminated oil pump.
    - Oil pump to lower crankcase O-ring missing or damaged
    - Oil strainer loose, clogged or damaged
    - Oil strainer O-ring missing or damaged
    - Oil pump pressure regulating valve failure
    - Large bearing gap
      ☞ Crankshaft check
    - Oil passage cracked, porous or clogged
    - Missing or improperly fitted oil passage plug

www.cargeek.ir

Engine Oil Leak Diagnosis

Step	Operation	Yes	No
Definition: First determine the leakage position by visual inspection, then repair or replace parts, or reseal the gasket surface to eliminate most of the oil leakage failures. Once the leak location is found, determine the causes of leakage. Repair the leak source and solve the leak problem.			
1	1. Run the vehicle until it reaches the normal operating temperature. 2. Park the vehicle on a level surface, and place it on a large piece of paper or other clean surfaces. 3. Wait for 15 **Min** . 4. Check for oil droplets. Does oil droplet appear?	Go to step 2	System OK
2	Can you identify the type of oil and approximate positions of the leakage?	Go to step 10	Go to step 3
3	1. Visually check the suspected location. If the suspected position is not readily observable, you can have the aid of a small mirror. 2. Check the following positions for leakage: • Sealing surface • Joint • Cracking or damaged components Can you identify the type of oil and approximate positions of the leakage?	Go to step 10	Go to step 4
4	1. Thoroughly clean the whole engine and surrounding components. 2. Under the normal operating temperature, drive the vehicle for several miles at different speeds. 3. Park the vehicle on a level surface, and place it on a large piece of paper or other clean surfaces. 4. Wait for 15 **Min** . 5. Identify the type of oil and the approximate positions of the leakage. Can you identify the type of oil and approximate positions of the leakage?	Go to step 10	Go to step 5
5	1. Visually check the suspected locations. If the suspected position is not readily observable, you can have the aid of a small mirror. 2. Check the following positions for leakage: • Sealing surface • Joint • Cracking or damaged components Can you identify the type of oil and approximate positions of the leakage?	Go to step 10	Go to step 6

www.cargeek.ir

www.cargeek.ir

Step	Operation	Yes	No
6	1. Thoroughly clean the whole engine and surrounding components. 2. Apply spray powder to the suspected locations. 3. Under the normal operating temperature, drive the vehicle for several miles at different speeds. 4. Identify the type of oil,and determine the approximate positions of the leakage according to the color change of powder surface. Can you identify the type of oil and approximate positions of the leakage?	Go to step 10	Go to step 7
7	1. Visually check the suspected locations. If the suspected position is not readily observable, you can have the aid of a small mirror. 2. Check the following positions for leakage: • Sealing surface • Joint • Cracking or damaged component Can you identify the type of oil and approximate positions of the leakage?	Go to step 10	Go to step 8
8	Identify the type of oil and approximate positions of the leakage with a high intensity invisible lamp assemblies. Please refer to the manufacturer's instructions when you use the tool. Can you identify the type of oil and approximate position of the leakage?	Go to step 10	Go to step 9
9	1. Visually check the suspected location. If the suspected position is not readily observable, you can have the aid of a small mirror. 2. Check the following positions for leakage: • Sealing surface • Joint • Cracking or damaged component Can you identify the type of oil and approximate position of the leakage?	Go to step 10	System is normal
10	1. Check the engine for mechanical damage. Pay special attention to the following positions: • Fluid level higher than recommended value • Oil pressure higher than recommended value • Oil filter or pressure bypass valve clogged or got failure • Engine ventilation system clogged or got failure • Improper tightening or damage to fastener • Cracking or void in components • Incorrect sealant or gasket	Go to step 11	System is normal

www.cargeek.ir

Step	Operation	Yes	No
	• Improper fitting of sealant or gasket • Damage or wear of gasket or seal • Damage or wear of sealing surface 2. Check whether the engine has been modified by the user. Is the engine mechanically damaged or modified by user?		
11	Repair or replace all damaged or modified components. Is the repair completed?	Go to Step 1	-

Crankcase Ventilation System
Inspection/Diagnosis

Symptoms	Correction
External oil leakage	Check for any of the following conditions: • **PCV**Hose or engine vent hose is blocked or kinked • **PCV**Hose damage, incorrect or improper refit • Large crankcase pressure
Unstable idle speed	Check for any of the following conditions: • **PCV**Hose or engine vent hose is blocked or kinked • **PCV**Hose leakage (damage) • Vacuum hose wear or improperly fitted
High idle speed	Check **PCV** hose for leakage (damage)
Silt in engine	Check for blocked or kinked **PCV** hose or engine vent hose

www.cargeek.ir

www.cargeek.ir

Service Procedures

Powertrain Disassembly and Assembly - MT

Remove

1. Disconnect the battery negative cable.
2. Remove the battery bracket.

Battery Bracket Remove

3. Drain the engine coolant.

Engine Coolant Drain

4. Drain engine oil.

Engine Oil Drain

5. Drain the transmission oil.

Manual Transmission Oil Drain

6. Recycle A/C refrigerant.

Recovery of air conditioning refrigerant

7. Remove the air filter assembly.

Air Filter Assembly Remove

8. Loosen the clamps on both sides of the turbocharger air inlet pipe, and remove the turbocharger air inlet pipe.
9. Loosen the clamp, and remove the throttle air inlet pipe.
10. Remove the harness clip from the battery box.
11. Remove 6 bolts fixing 2 battery box brackets to the front longitudinal member, and remove the 2 battery box brackets.

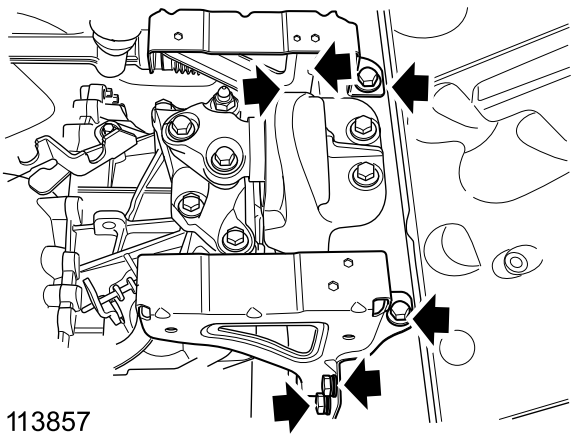

S1113857

12. Loosen the clamp, and disconnect the engine water outlet pipe.

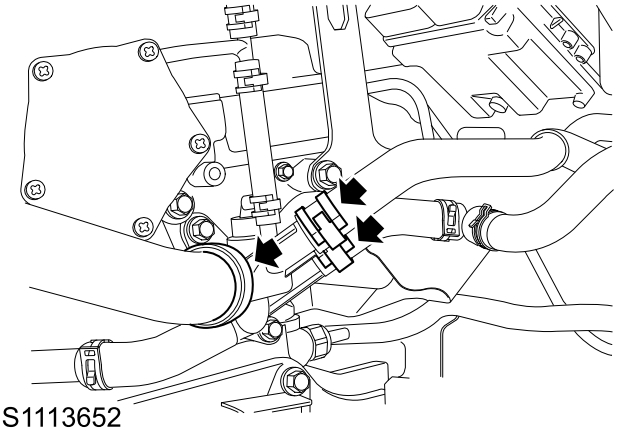

S1113652

13. Remove the vacuum tube on the mechanical vacuum pump.
14. Disconnect the low-pressure fuel line on the high-pressure fuel pump.
15. Disconnect the connector of engine control module.
16. Disconnect the engine harness and body harness connector, and remove and discard the harness clip from the body.
17. Remove 1 bolt fixing the engine ground wire to the right beam, and loosen the engine ground wire.
18. Disconnect the canister solenoid air inlet pipe.
19. Remove 2 gear shift cable ball joints (1).
20. Loosen the clips, release the external gear selection/shift cable (2) from the cable bracket, and discard the plastic clips.

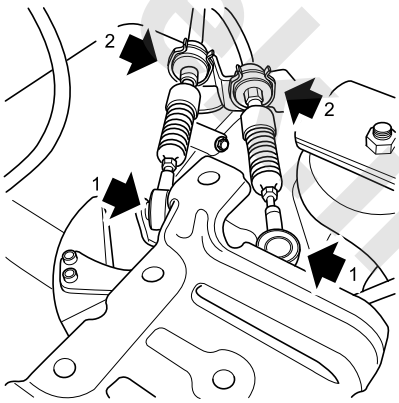

S1220149

21. Disconnect the hydraulic clutch line, remove the lock plate, and remove the hydraulic clutch hose.

www.cargeek.ir

www.cargeek.ir

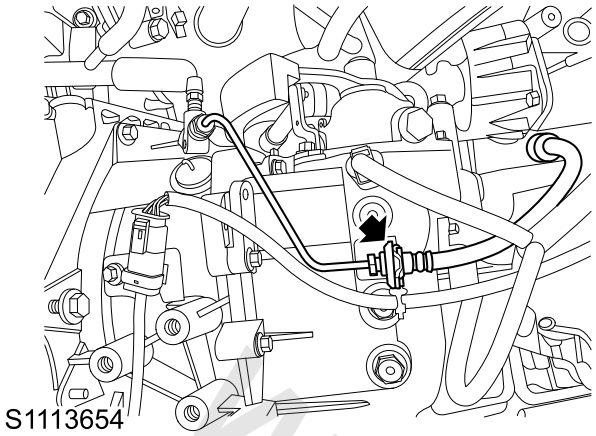

S1113654

22. Disconnect the reverse lamp switch and neutral position sensor harness, remove the clip and harness.
23. Open the engine compartment fuse box cover, and disconnect the body harness and fuse box connector.
24. Raise the vehicle on the elevator to a suitable position.
25. Remove the front subframe.

Front Subframe Remove

26. Remove 1 bolt fixing the lower tie bar to the lower tie bar bracket, and remove the lower tie bar.
27. Remove 3 bolts fixing the lower tie bar to the transmission, and remove the lower tie bar bracket.
28. Remove the press plate bolt securing the compressor hose assembly to the compressor, and disconnect the pipeline.

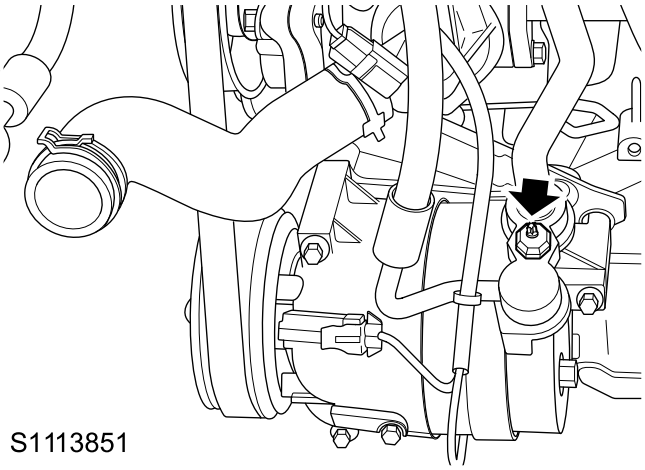

S1113851

29. Lower the vehicle.
30. Fix the engine with the special tool **T10007** and **TEN00070**.

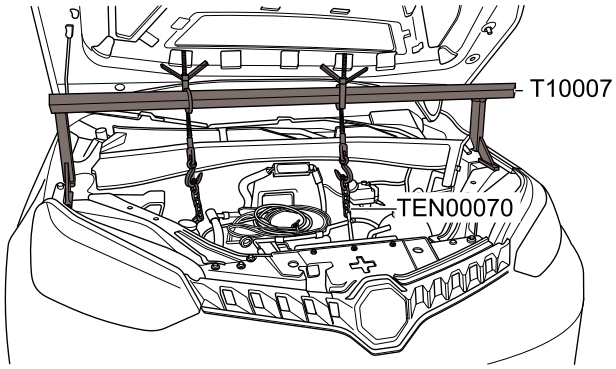

S1113568

31. Remove the engine mount.

Powertrain Mount Remove

32. Remove 3 bolts fixing the transmission mount to the transmission mounting bracket.

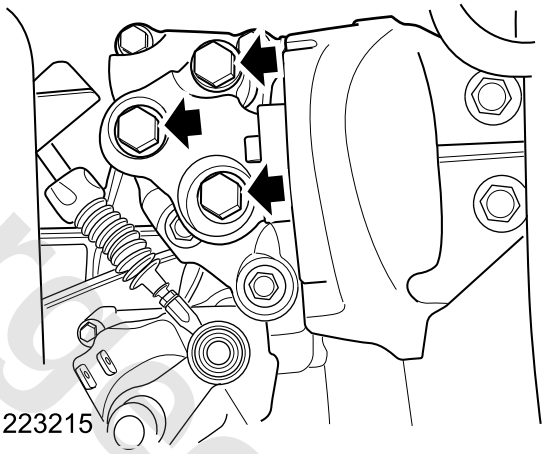

S1223215

33. Support the bottom of the powertrain with a bracket.
34. Fix the engine to the bracket, remove the special tool **T10007** and **TEN00070**, and remove the powertrain.

Refit

1. Fix the powertrain to the bracket, and place it at the bottom of the vehicle.
2. Lower the vehicle, place the engine in the engine compartment, and fix the engine with the special tool **T10007**and **TEN00070**.
3. Fix the transmission mount to the transmission mounting bracket, fit 3 bolts, tighten to **50Nm+45°**, and check the torque.
4. Fit the engine mount.

Powertrain Mount Refit

5. Remove the bracket.
6. Raise the vehicle on an elevator.
7. Fix the lower tie bar bracket to the transmission, fit 3 bolts, tighten to , and check the torque.
8. Fix the lower tie bar to the lower tie bar bracket, fit 1 bolt, tighten to **90-110Nm**, and check the torque.

www.cargeek.ir

www.cargeek.ir

9. Fix the compressor hose to the compressor , fit 1 nut, tighten it to **19–25Nm**, and check the torque.
10. Fit the front subframe.

Front Subframe Refit

11. Lower the vehicle.
12. Open the engine compartment fuse box cover, and connect the body harness and fuse box connector.
13. Connect the reverse switch and neutral position sensor harness, and fix the harness clip.
14. Connect the hydraulic clutch line, and empty the air in the clutch.

Clutch System Bleeding

15. Fit new plastic buckles, and fit the external gear selection/shift cable to the cable bracket.
16. Fit 2 gear shift cable ball joints.
17. Connect the canister solenoid air inlet pipe.
18. Fix the engine ground wire to the right beam.
19. Connect the engine harness and body harness connector, and fix the harness clip to the body, and then fix the harness to the harness clip.
20. Connect the connector of the engine control module.
21. Connect the low-pressure fuel line on the high-pressure fuel pump.
22. Connect the vacuum tube on the mechanical vacuum pump.
23. Connect the engine water outlet hose and fix it with clamps.
24. Fix 2 battery box brackets to the front longitudinal beam, fit 6 bolts, tighten to **40-50Nm**, and check the torque.
25. Fix the harness buckle to the battery box.
26. Fit the throttle air inlet pipe, and fix it with clamps.
27. Fit the turbocharger air inlet pipe, and fix it with clamps.
28. Fit the air filter assembly.

Air Filter Assembly Refit

29. Fill the engine oil.

Engine Oil Refill

30. Fill the transmission oil.

Manual Transmission Oil Refill

31. Fill the engine coolant.

Engine Coolant Refill

32. Fill the A/C refrigerant.

A/C Refrigerant Refill

33. Fit the battery bracket.

Battery Box Bracket Refit

34. Connect the battery negative cable.

Powertrain Disassembly and Assembly - AT

Remove

1. Disconnect the battery negative cable.
2. Remove the battery bracket.

Battery Bracket Remove

3. Drain the engine coolant.

Engine Coolant Drain

4. Drain engine oil.

Engine Oil Drain

5. Drain the transmission oil.

Automatic Transmission Oil Drain

6. Recycle A/C refrigerant.

Recovery of air conditioning refrigerant

7. Remove the air filter assembly.

Air Filter Assembly Remove

8. Loosen the clamps on both sides of the turbocharger air inlet pipe, and remove the turbocharger air inlet pipe.
9. Loosen the clamp, and remove the throttle air inlet pipe.
10. Remove the harness clip from the battery box.
11. Remove 6 bolts fixing 2 battery box brackets to the front longitudinal member, and remove the 2 battery box brackets.

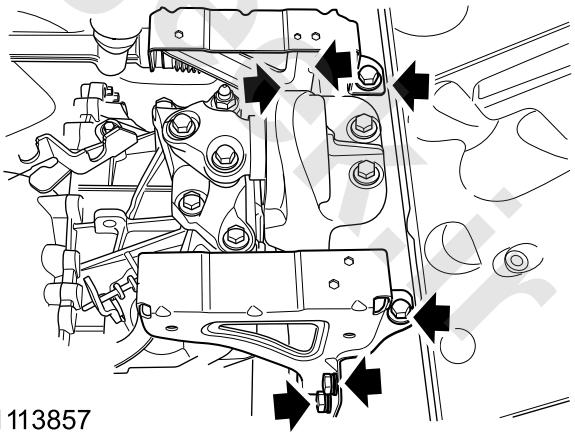

S1113857

12. Loosen the clamp, and disconnect the engine water outlet pipe.

www.cargeek.ir

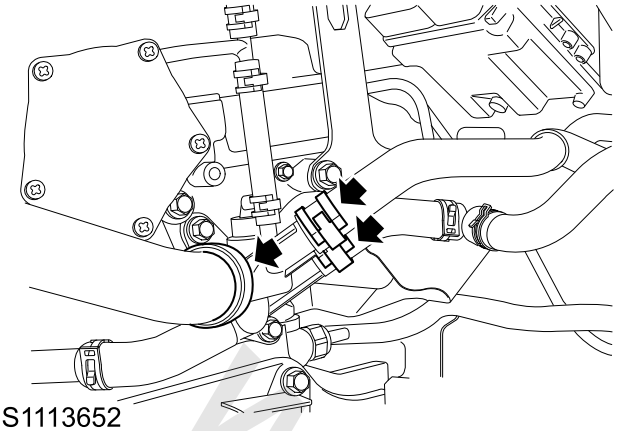

S1113652

13. Remove the vacuum tube on the mechanical vacuum pump.
14. Disconnect the low-pressure fuel line on the high-pressure fuel pump.
15. Disconnect the connector of engine control module.
16. Disconnect the engine harness and body harness connector, and remove and discard the harness clip from the body.
17. Remove 1 bolt fixing the engine ground wire to the right beam, and loosen the engine ground wire.
18. Disconnect the canister solenoid air inlet pipe.
19. Disconnect the transmission harness connector.

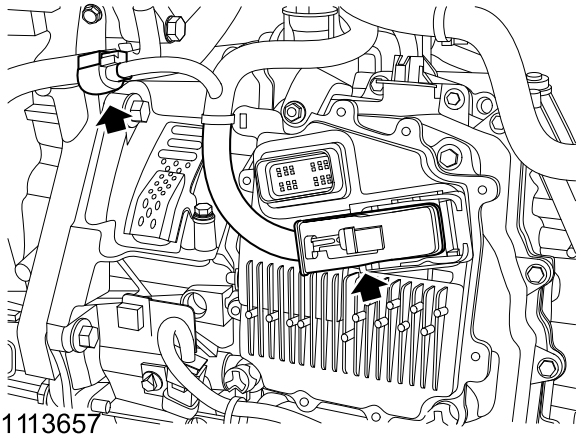

S1113657

20. Disconnect the master cylinder position sensor connector of the clutch actuator.
21. Disconnect the speed sensor connector.

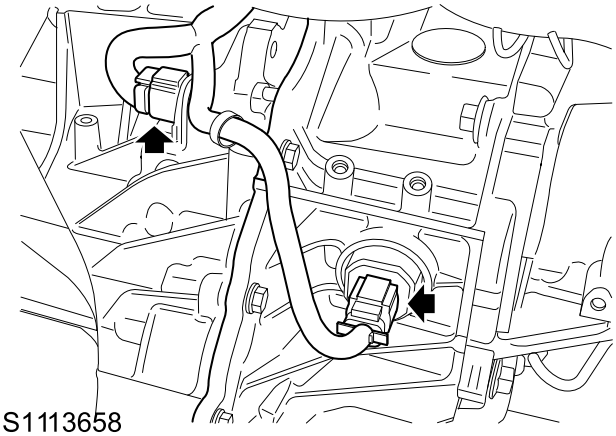

S1113658

22. Remove the clip fixing the transmission harness to the transmission, and remove the transmission harness.

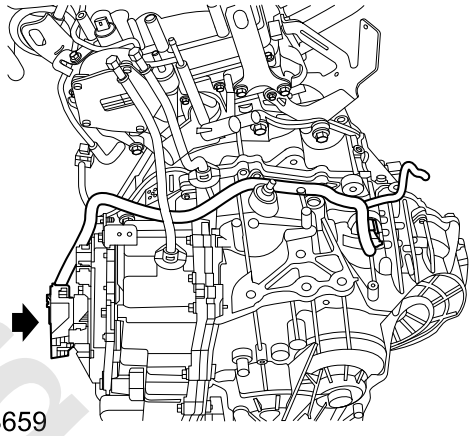

S1113659

23. Open the engine compartment fuse box cover, and disconnect the body harness and fuse box connector.
24. Raise the vehicle on the elevator to a suitable position.
25. Remove the front subframe.

Front Subframe Remove

26. Remove the press plate bolt securing the compressor hose assembly to the compressor, and disconnect the pipeline.

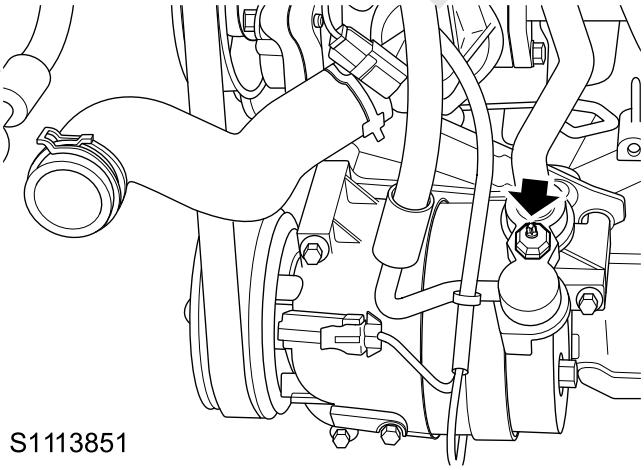

S1113851

27. Remove 1 bolt fixing the lower tie bar to the lower tie bar bracket, and remove the lower tie bar.

www.cargeek.ir

28. Remove 4 bolts fixing the lower tie bar to the transmission, and remove the lower tie bar bracket.
29. Lower the vehicle.
30. Fix the engine with the special tool **T10007** and **TEN00070**.

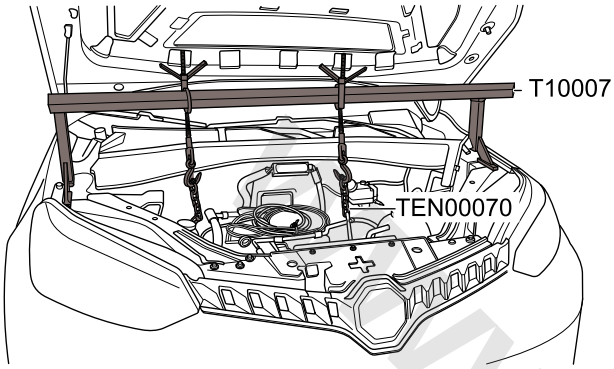

S1113568

31. Remove the engine mount.

Powertrain Mount Remove

32. Remove 2 bolts and 1 nut fixing the transmission mount to the transmission mounting bracket.

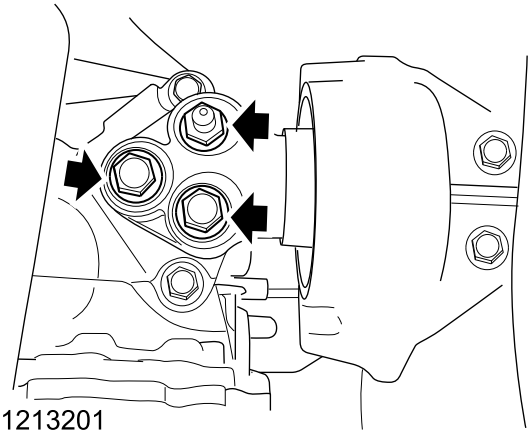

S1213201

33. Support the bottom of the powertrain with a bracket.
34. Fix the engine to the bracket, remove the special tool **T10007** and **TEN00070**, and remove the powertrain.

Refit

1. Fix the powertrain to the bracket, and place it at the bottom of the vehicle.
2. Lower the vehicle, place the engine in the engine compartment, and fix the engine with the special tool **T10007**and **TEN00070**.
3. Fix the transmission mount to the transmission mounting bracket, fit 2 bolts, tighten to **(45-55)Nm+(40-50)°**, fit 1 nut, tighten to **(45-55)Nm+(40-50)°**, and check the torque.
4. Fit the engine mount.

Powertrain Mount Refit

5. Remove the bracket.
6. Raise the vehicle on an elevator.
7. Fix the lower tie bar bracket to the transmission, fit 4 bolts, tighten to , and check the torque.
8. Fix the lower tie bar to the lower tie bar bracket, fit 1 bolt, tighten to **90-110Nm**, and check the torque.
9. Fix the compressor hose to the compressor , fit 1 nut, tighten it to **90-110Nm**, and check the torque.
10. Fit the front subframe.

Front Subframe Refit

11. Lower the vehicle.
12. Open the engine compartment fuse box cover, and connect the body harness and fuse box connector.
13. Connect the speed sensor connector.
14. Connect the master cylinder position sensor connector of the clutch actuator.
15. Connect the transmission connector.
16. Connect the transmission harness connector, and fix the harness staple bolt to the transmission housing.
17. Connect the canister solenoid air inlet pipe.
18. Fix the engine ground wire to the right beam.
19. Connect the engine harness and body harness connector, and fix the harness clip to the body, and then fix the harness to the harness clip.
20. Connect the connector of the engine control module.
21. Connect the low-pressure fuel line on the high-pressure fuel pump.
22. Connect the vacuum tube on the mechanical vacuum pump.
23. Connect the engine water outlet hose and fix it with clamps.
24. Fix 2 battery box brackets to the front longitudinal beam, fit 6 bolts, tighten to **40-50Nm**, and check the torque.
25. Fix the harness buckle to the battery box.
26. Fit the throttle air inlet pipe, and fix it with clamps.
27. Fit the turbocharger air inlet pipe, and fix it with clamps.
28. Fit the air filter assembly.

Air Filter Assembly Refit

29. Fill the engine oil.

Engine Oil Refill

30. Fill the transmission oil.

Automatic Transmission Oil Refill

31. Fill the engine coolant.

Engine Coolant Refill

www.cargeek.ir

32. Fill the A/C refrigerant.

☞ **A/C Refrigerant Refill**

33. Fit the battery bracket.

☞ **Battery Box Bracket Refit**

34. Connect the battery negative cable.

Powertrain Mount

Remove

1. Disconnect the battery negative cable.
2. Remove the air filter assembly.

☞ **Air Filter Assembly Remove**

3. Loosen the clamps, and remove the turbocharger air intake pipe.
4. Fix the engine with the special tool **T10007** and **TEN00070**.

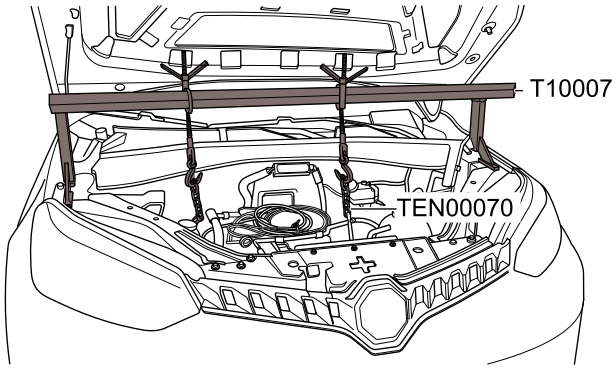

S1113568

5. Remove 2 nuts (1) fixing the right engine mount side bracket to the front wheelhouse liner and engine mount.
6. Remove 2 nuts and 1 bolt (2) fitting the right engine mount to the engine mounting bracket.
7. Remove 2 bolts (3) fitting the right engine mount to the right longitudinal beam, and remove the right mount.

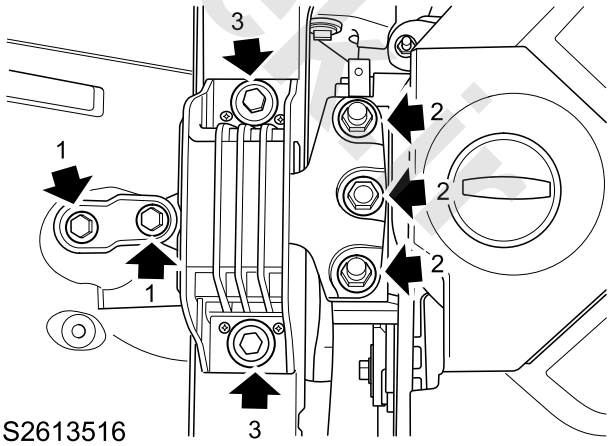

S2613516

8. Remove the engine ground wire.
9. Remove 3 bolts fixing the engine mounting bracket to the engine, and remove the engine mounting bracket.

www.cargeek.ir

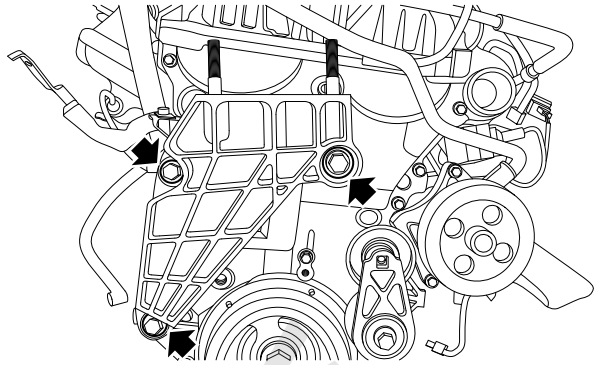

S1113748

Refit

1. Fix the engine mounting bracket to the engine, fit 3 bolts, tighten to **58-62Nm** and check the torque.
2. Fix the engine ground wire to the engine mounting bracket and right longitudinal beam.
3. Fit the right engine mount to the engine mounting bracket, fit 2 nuts, tighten to **90-110Nm**, fit 1 bolt, tighten to **90-110Nm**, and check the torque.
4. Fit the right engine mount to the right longitudinal beam, fit 2 bolts, tighten to **90-110Nm** and check the torque.
5. Fix the right engine mount to the engine mounting bracket to the front wheelhouse liner and engine mount, fit 2 bolts, tighten to **55-65Nm**.
6. Remove the special tool **T10007** and **TEN00070**.
7. Fit the turbocharger air inlet pipe, and fix it with clamps.
8. Fit the air filter assembly.

Air Filter Assembly Refit

9. Connect the battery negative cable.

Flywheel - MT

Remove

1. Disconnect the battery negative.
2. Remove the clutch pressure plate and clutch driven plate assembly.

Clutch Assembly Remove

3. Secure the crankshaft with special tool **TEN00135**.

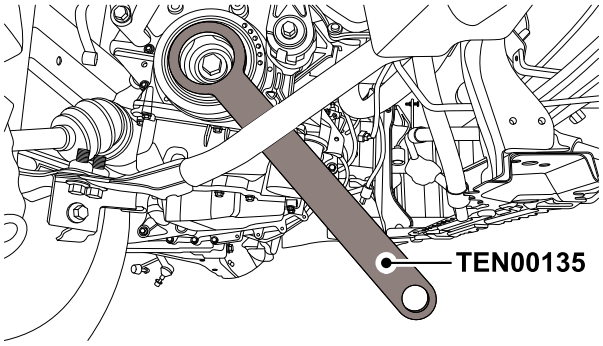

S1113689

4. Remove 8 bolts securing the flywheel to the crankshaft, then remove the flywheel and crankshaft position sensor reluctor ring.

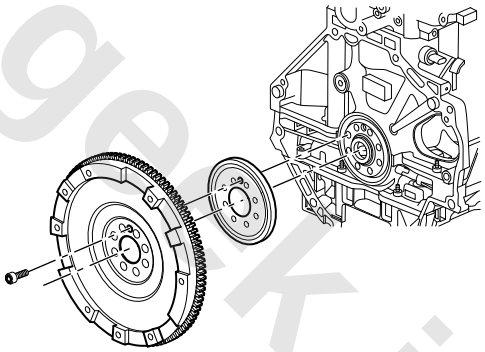

S1113661

Refit

1. Secure the crankshaft with special tool **TEN00135**.
2. Secure the flywheel and crankshaft position sensor reluctor ring to the crankshaft with locating pin, fit 8 bolts, tighten to **30Nm + 70°** in sequence as shown, and then check the torque.

www.cargeek.ir

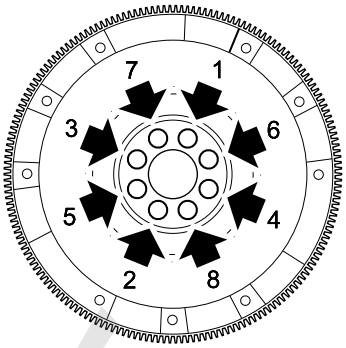

S1113662

3. Refit the clutch pressure plate and clutch driven plate assembly.

Clutch Assembly Refit

4. Connect the battery negative.
5. Place the ignition switch in ON, and use **VDS** to perform "**ECM** Adaption Reset".
6. Wait for 2-5 seconds, and turn off the ignition switch, then re-start the vehicle.

Flywheel - AT

Remove

1. Disconnect the battery negative.
2. Remove the dry dual clutch automatic transmission.

Dry Dual Clutch Automatic Transmission Remove

3. Secure the flywheel with special tool **TEN00135**.

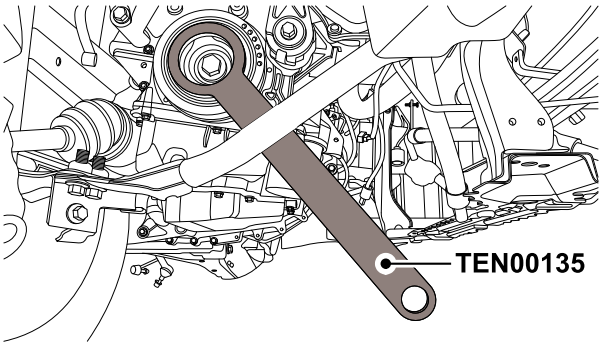

S1113689

4. Remove 8 bolts securing the flywheel to the crankshaft, then remove the flywheel and crankshaft position sensor reluctor ring.

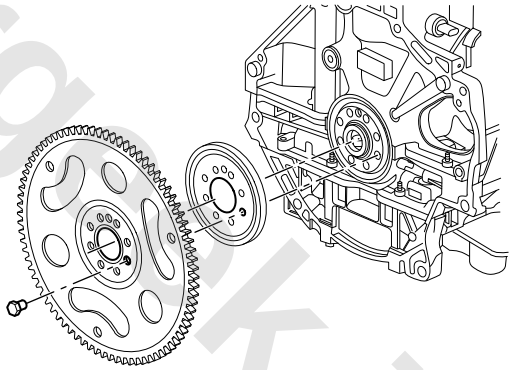

S163035

Refit

1. Secure the crankshaft with special tool **TEN00135**.
2. Secure the flywheel and crankshaft position sensor reluctor ring to the crankshaft with locating pin, fit 8 bolts, tighten to **30Nm + 70°** in sequence as shown, and then check the torque.

www.cargeek.ir

www.cargeek.ir

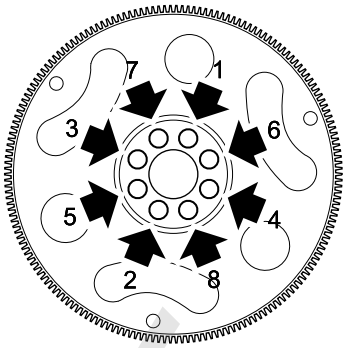

S1113664

3. Refit the dry dual clutch automatic transmission.

Dry Dual Clutch Automatic Transmission Refit

4. Connect the battery negative.
5. Place the ignition switch in ON, and use **VDS** to perform "**ECM** Adaption Reset".
6. Wait for 2-5 seconds, and turn off the ignition switch, then re-start the vehicle.

Cylinder Head

Remove

1. Disconnect the battery negative.
2. Drain the engine oil.

Engine Oil Drain

3. Drain the engine coolant.

Engine Coolant Drain

4. Remove the hydraulic tappet.

Hydraulic Tappet Remove

5. Remove the turbocharger.

Turbocharger Remove

6. Remove the intake manifold.

Intake Manifold Remove

7. Remove the high-pressure oil pump.

High-pressure Oil Pump Remove

8. Remove the thermostat housing.

Thermostat Remove

9. Support the bottom of the engine with a bracket.
10. Remove the lifting equipment.
11. Remove 10 bolts fixing the cylinder head to cylinder block in the sequence shown.

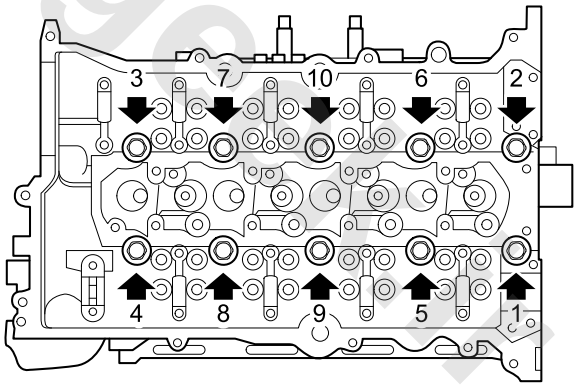

S1113665

12. Remove the cylinder head, and discard the cylinder gasket.

www.cargeek.ir

www.cargeek.ir

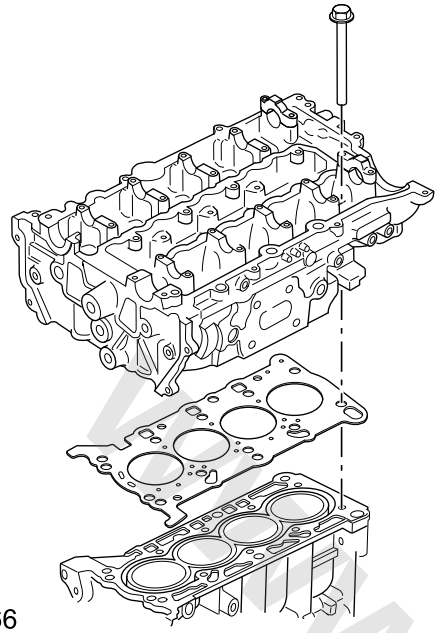

S1113666

13. Remove the spark plug.

Spark Plug Remove

14. Remove the cylinder head oil gallery check valve.
15. Remove the plug on the cylinder head.

Refit

1. Fit the plug on the cylinder head, tighten to **53-67Nm** and check the torque.
2. Fit the cylinder head oil gallery check valve.
3. Fit the spark plug.

Spark Plug Refit

4. Check and clean the cylinder head.

Cylinder Head Check

5. Fit a new cylinder head gasket to the cylinder block through locating pins.
6. Locate the cylinder head to the cylinder block through locating pins, fit 10 bolts, tighten to **30Nm+240°** in the direction shown, and check the torque.

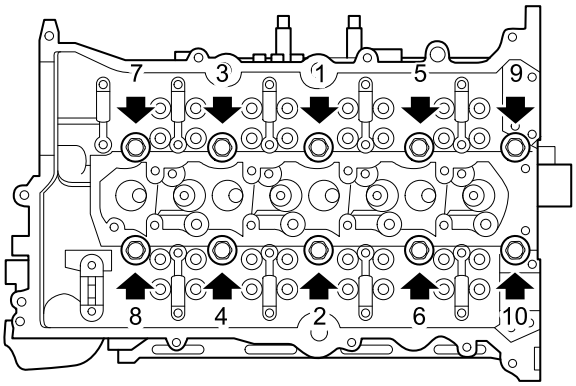

S1113667

7. Fix the engine with lifting equipment.
8. Remove the bottom bracket.
9. Fit the thermostat housing.

Thermostat Refit

10. Fit the high-pressure oil pump.

High-pressure Oil Pump Refit

11. Fit the intake manifold.

Intake Manifold Refit

12. Fit the turbocharger.

Turbocharger Refit

13. Fit the hydraulic tappet.

Hydraulic Tappet Refit

14. Refill engine coolant.

Engine Coolant Refill

15. Refill engine oil.

Engine Oil Refill

16. Connect the battery negative.

www.cargeek.ir

Cylinder Block

Remove

1. Remove the cylinder head.

Cylinder Head Remove

2. Remove the crankshaft.

Crankshaft Remove

3. Remove the oil pressure sensor.
4. Remove knock sensors.
5. Remove 4 oil nozzles.
6. Remove 4 lower crankcase locating pins.
7. Remove 2 transmission locating pins.
8. Remove 2 cylinder head locating pins.
9. Remove the plug-cylinder block oil gallery.
10. Remove the cylinder block water jacket plug.

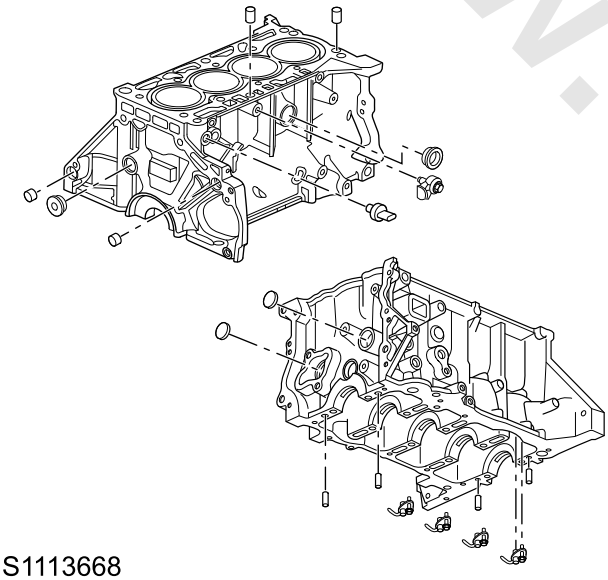

S1113668

Refit

1. Clean the cylinder block sealing junction surface, cooling channel, oil gallery, bearing seat, threaded hole, etc., and ensure that there is no foreign material.
2. Check the cylinder block.

Cylinder Block Check

3. Fit the cylinder block water jacket plug to the cylinder block, tighten to **53-67Nm**, and check the torque.
4. Fit the plug-cylinder block oil gallery to the cylinder block, and tighten to **45-55Nm**.
5. Fit 2 cylinder head locating pins.
6. Fit 2 transmission locating pins.
7. Fit 4 lower crankcase locating pins.
8. Fix 4 oil nozzles to the upper crankcase, fit the bolts, tighten to **8-12Nm**, and check the torque.
9. Fix the knock sensor to the cylinder block, fit the bolt, tighten to **15-25Nm**, and check the torque.
10. Fix the oil pressure sensor to the cylinder block, tighten to **31-39Nm**, and check the torque.
11. Fit the crankshaft.

Crankshaft Refit

12. Fit the cylinder head.

Cylinder Head Refit

www.cargeek.ir

www.cargeek.ir

Crankshaft

Remove

1. Remove the crankshaft sprocket.

☞ **Crankshaft Sprocket Remove**

2. Remove the oil pump.

☞ **Oil Pump Remove**

3. Remove 1 bolt fixing the crankcase return pipe to the lower crankcase, and remove the lower crankcase oil return pipe.
4. Remove 3 bolts fixing the crankshaft oil guide plate to the lower crankcase, and remove the crankshaft oil guide plate.

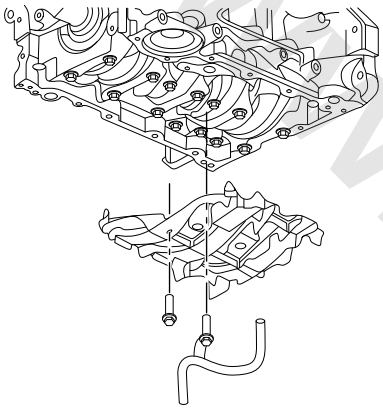

S1113674

5. Rotate the crankshaft so that the piston rod assembly is at the bottom dead center of the cylinder.
6. Remove 2 bolts fixing the connecting rod big end shell cover to the connecting rod.
7. Remove the connecting rod big end shell cover, and push the piston rod assembly to the top edge of the cylinder.
8. Remove the lower crankcase.

☞ **Lower Crankcase Remove**

9. Remove the main bearing shell from the lower crankcase.
10. Remove the crankshaft rear oil seal.
11. Remove the crankshaft, and remove the other half piece of main bearing shell from the cylinder block.

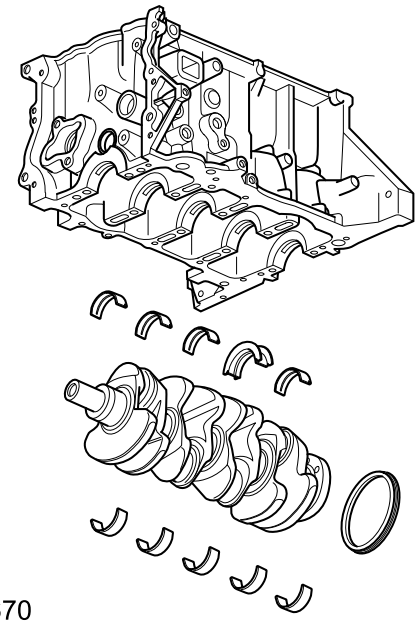

S1113670

Refit

1. Clean the mating surface between the cylinder block and bearing base.
2. Check the crankshaft and main bearing shell.
3. Fix the main bearing shell and thrust bearing shell to the cylinder block bearing seat, and ensure that the bearing shell oil hole is aligned with the bearing seat oil hole.

Caution: *Please fit the bearing 1 shell (with coating) and thrust bearing shell correctly.*

4. Apply clean engine oil to the bearing shell.
5. Fit the crankshaft.

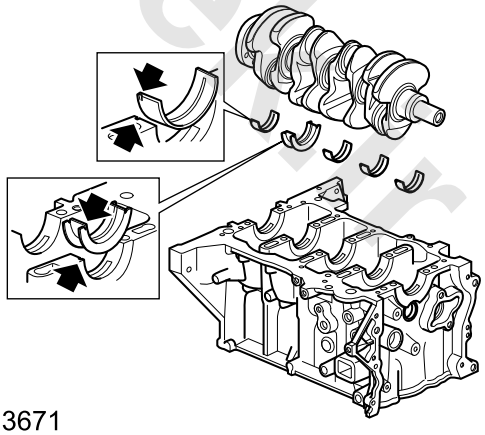

S1113671

6. Clean the lower crankcase bearing seat junction surface.
7. Fit the other half piece of main bearing shell to the lower crankcase bearing seat.
8. Fit the lower crankcase.

☞ **Lower Crankcase Refit**

9. Rotate the crankshaft so that the crankshaft connecting rod journal is at the bottom dead center.
10. Push the piston connecting rod assembly to the bottom

www.cargeek.ir

www.cargeek.ir

dead center at the bottom of the cylinder liner, and make the connecting rod big end fit the crankshaft connecting rod journal.

11. Fit the bearing shell to the connecting rod big end shell cover, fix the connecting rod big end shell cover to the connecting rod big end, fit 2 bolts, tighten to **25Nm+75°**, and check the torque.

Caution: *Make the connecting rod big end shell cover boss face the rear end of the engine; the alphabetic signs "AA" at the side surface of the shell cover must be on the same side.*

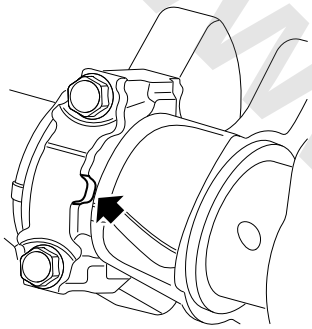

S1113763

12. Rotate the crankshaft to ensure free rotation of the crankshaft connecting rod, without clamping stagnation.
13. Fix the crankshaft oil guide plate to the lower crankcase, fit 3 bolts, tighten to **8-12Nm** in the sequence as shown, and check the torque.

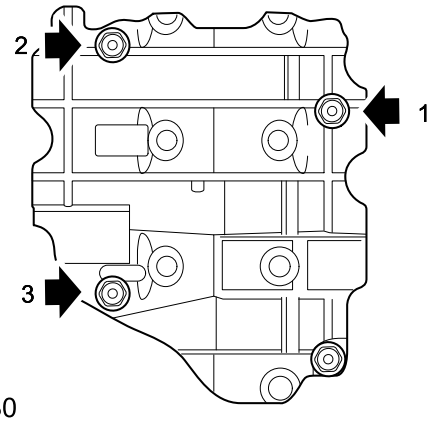

S1113680

14. Fix the crankcase oil return pipe to the lower crankcase, fit 1 bolt, tighten to **8-12Nm**, and check the torque.
15. Fit the special tool **TEN00144** into the crankshaft mounting hole at the rear end of the engine.
16. Fit the crankshaft rear seal to the rear end of the crankshaft with the special tool **TEN00143** through the special tool **TEN00144**.

Caution: *The oil seal must be fitted in the correct direction. The outward side shall be marked with "This Side Outwards".*

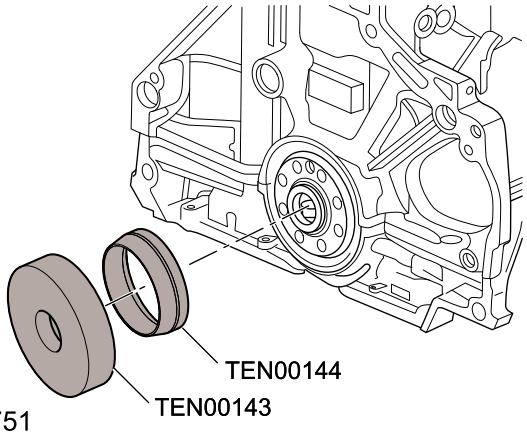

S1113751

17. Fit the oil pump.

☞**Oil Pump Refit**

18. Fit the crankshaft sprocket.

☞**Crankshaft Sprocket Refit**

19. Place the ignition switch in ON, and use **VDS** to perform "**ECM** Adaption Reset".
20. Wait for 2-5 seconds, and turn off the ignition switch, then re-start the vehicle.

www.cargeek.ir

www.cargeek.ir

Lower Crankcase

Remove

1. Remove the flywheel.

Flywheel-MT Remove
Flywheel-AT Remove

2. Remove the crankshaft timing sprocket.

Crankshaft Timing Sprocket Remove

3. Remove the oil pump.

Oil Pump Remove

4. Remove 2 bolts fixing the turbocharger oil return pipe to the crankcase, and disconnect.
5. Remove 3 bolts fixing the air conditioning compressor to the engine, and remove the air conditioning compressor.
6. Remove 1 bolt fixing the crankshaft position sensor to the lower crankcase, and remove the crankshaft position sensor.

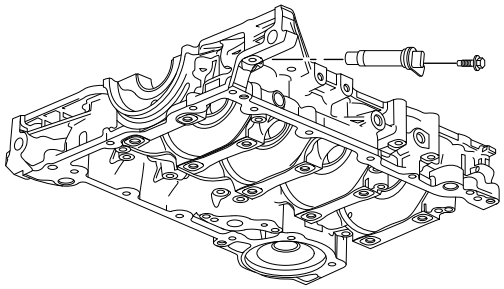

S1113673

7. Remove 1 bolt fixing the crankcase oil return pipe to the lower crankcase, and remove the lower crankcase oil return pipe.
8. Remove 3 bolts fixing the crankshaft oil guide plate to the lower crankcase, and remove the crankshaft oil guide plate.

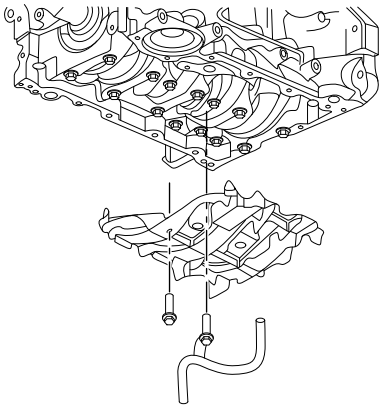

S1113674

9. Remove 13 bolts fixing the lower crankcase to the upper periphery of the cylinder block.

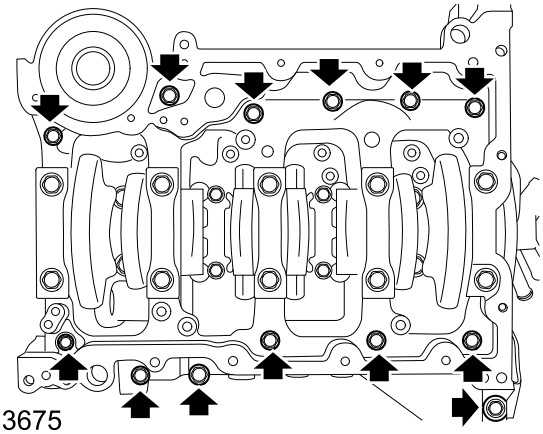

S1113675

10. Remove 10 bolts fixing the crankshaft main journal in the sequence shown, and remove the lower crankcase.

Refit

1. Clean the junction surface between crankcase and cylinder block, and ensure that there is no foreign material.
2. Apply sealant to the lower crankcase as shown.

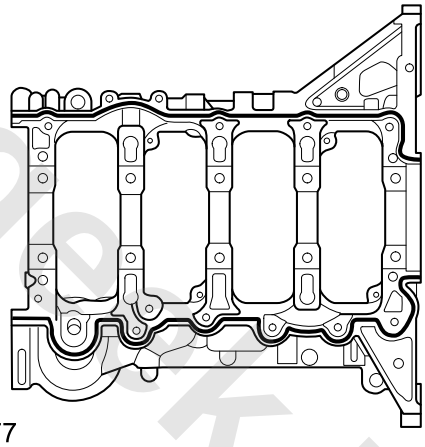

S1113677

3. Fix the lower crankcase to the cylinder block through 2 locating pins, fit 10 crankshaft main journal fixing bolts, tighten to **15Nm+ (176-184) °** in the sequence shown, and check the torque.

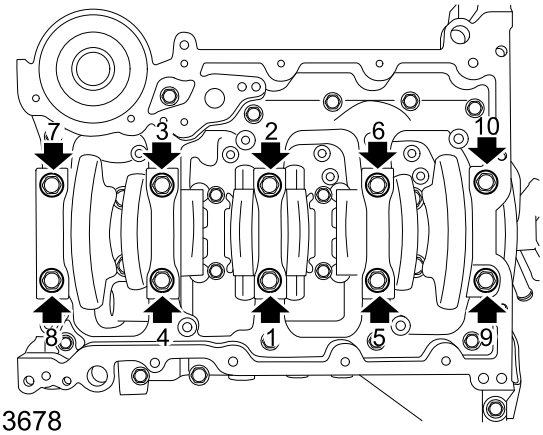

S1113678

4. Fit 13 peripheral bolts, tighten to **8-12Nm** in the

www.cargeek.ir

sequence shown, and check the torque.

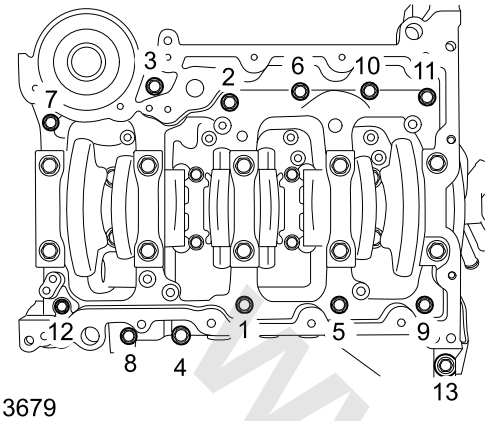

S1113679

5. Fix the crankshaft oil guide plate to the lower crankcase, fit 3 bolts, tighten to **8-12Nm** in the sequence shown, and check the torque.

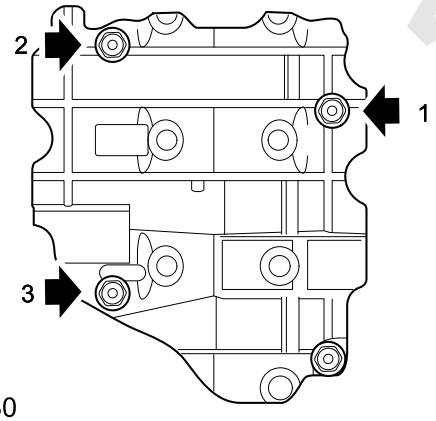

S1113680

6. Fix the crankcase oil return pipe to the lower crankcase, fit 1 bolt, tighten to **8-12Nm**, and check the torque.
7. Fix the crankshaft position sensor to the lower crankcase, fit 1 bolt, tighten to **8-12Nm**, and check the torque.
8. Fix the A/C compressor to the engine, fit 3 bolts, tighten to **19–25Nm**, and check the torque.
9. Fix the turbocharger oil return pipe to the lower crankcase, fit 2 bolts, tighten to **8-12Nm**, and check the torque.
10. Fit the oil pump.

Oil Pump Refit

11. Fit the crankshaft timing sprocket.

Crankshaft Timing Sprocket Refit

12. Fit the flywheel.

Flywheel-MT Refit
Flywheel-AT Refit

Oil Pan

Remove

1. Disconnect the battery negative cable.
2. Drain engine oil.

Engine Oil Drain

3. Remove the front exhaust pipe.

Front Exhaust Pipe Remove

4. Remove 3 bolts fixing the oil pan to the transmission.
5. Remove 11 bolts fixing the lower part of the oil pan to the upper assembly of the oil pan, and remove the lower part of the oil pan.
6. Disconnect the external connector of oil pump control valve.
7. Disconnect the internal connector of oil pump control valve.

Caution: *Oil must not be fed at the internal connector; otherwise, the performance will be affected, and the internal connection harness is to be replaced!*

8. Remove 1 bolt (3) fixing the internal connection harness of oil pump control valve to the upper part of the oil pan, remove and discard the internal connection harness of oil pump control valve.

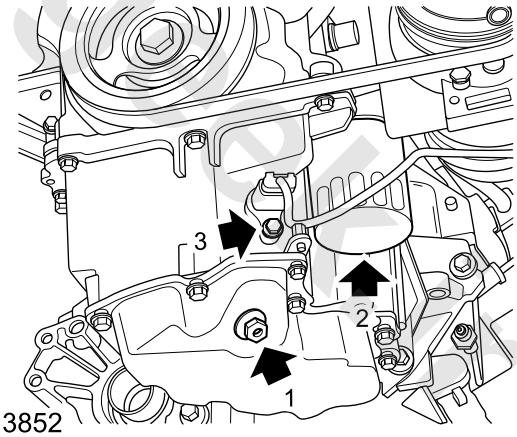

S1113852

9. Remove 16 bolts fixing the upper part of the oil pan to the lower crankcase, and remove the upper part of the oil pan.

www.cargeek.ir

www.cargeek.ir

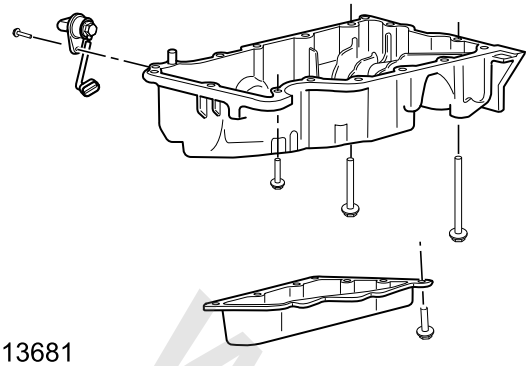

S1113681

Refit

1. Clean all components and junction surfaces.
2. Apply sealant to the upper part of the oil pan and lower crankcase junction surface.

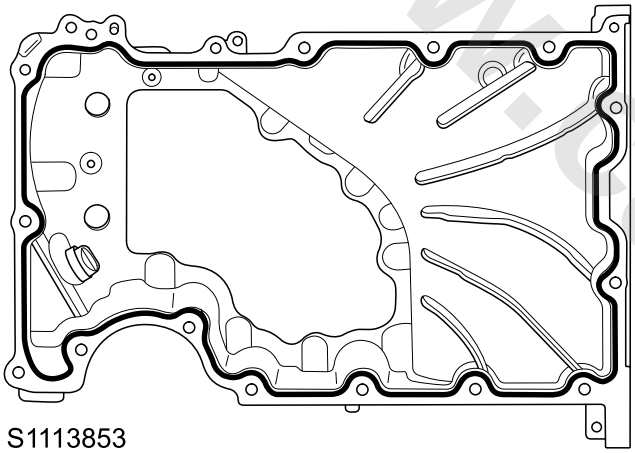

S1113853

3. Fix the upper part of the oil pan to the lower crankcase through locating pins, fit 16 bolts, tighten to **9-11Nm** in the sequence as shown, and check the torque.

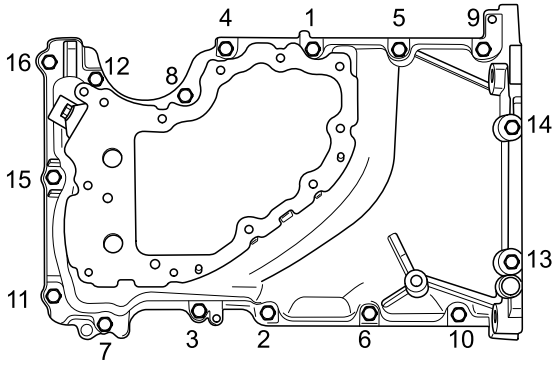

S1113854

4. Fix the internal connection harness of oil pump control valve with a new seal ring to the oil pan, fit 1 bolt, tighten to **8-12Nm**, and check the torque.
5. Connect the internal connector of oil pump control valve.

Caution: *Oil must not be fed at the internal connector; otherwise, the performance will be affected, and the internal connection harness is to be replaced!*

6. Connect the external connector of oil pump control valve.
7. Apply sealant to the lower part of the oil pan and lower crankcase junction surface.

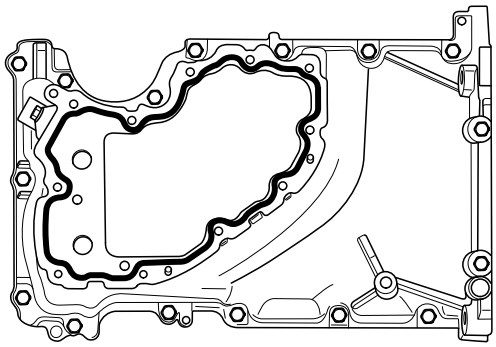

S1113855

8. Fix the lower part of the oil pan to the upper part of the oil pan, fit 11 bolts, tighten to **9-11Nm** in the sequence as shown, and check the torque.

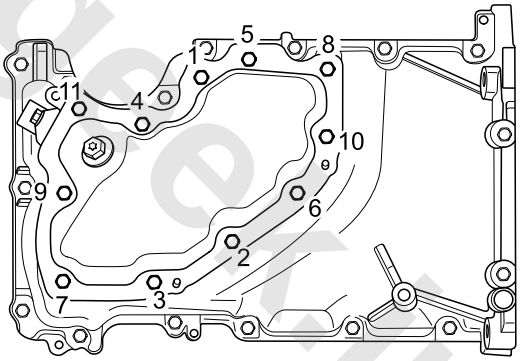

S1113856

9. Fit 3 bolts fixing the oil pan to the transmission and tighten them to **49–67Nm**.
10. Fit the front exhaust pipe.

☞ **Front Exhaust Pipe Refit**

11. Fill the engine oil.

☞ **Engine Oil Refill**

12. Connect the battery negative cable.

www.cargeek.ir

Camshaft Cover

Remove

1. Disconnect the battery negative.
2. Remove the oil dipstick.
3. Remove the engine hood.
4. Remove the injector.

☞**Fuel Injector Remove**

5. Remove the solenoid valve of camshaft phase adjustment actuator.

☞**Camshaft Phase Adjustment Actuator Solenoid Valve Remove**

6. Remove the camshaft position sensor.

☞**Camshaft Position Sensor Remove**

7. Remove the mechanical vacuum pump.

☞**Mechanical Vacuum Pump Remove**

8. Remove the turbocharger water return pipe.

☞**Turbocharger Water Return Pipe Remove**

9. Remove the harness clip fixed to the camshaft cover, and remove the harness.
10. Remove 1 bolt fixing the high-pressure fuel pipe clip to the camshaft cover.
11. Remove 1 screw fixing the PCV hard tube assembly with PCV valve and bolt joint to the turbocharger, and disconnect.
12. Remove the PCV hard tube assembly from the camshaft cover and discard it.

Caution: *This component is removed only when the check shows that replacement is necessary. Once removed, PCV valve will be damaged and must be replaced.*

13. Remove the PCV breathing tube assembly.
14. Remove the bolt (1 for each) fixing the 2 PCV valve assemblies to the camshaft cover.

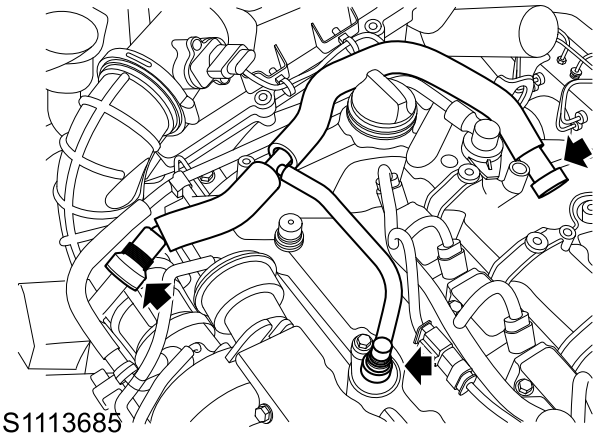

S1113685

15. Remove 18 bolts and 2 studs fixing the camshaft cover to the cylinder head in the sequence shown.

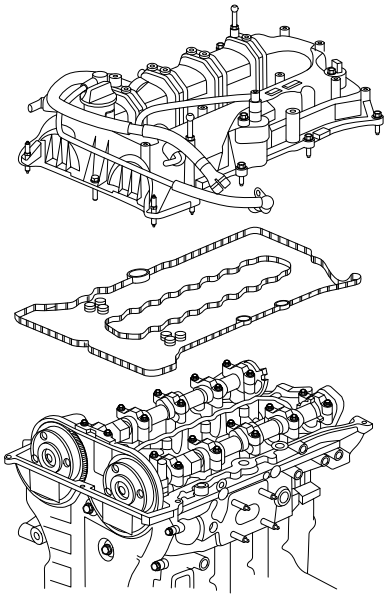

S1113687

16. Remove the camshaft cover and discard the seal gasket.

Refit

1. Fit a new camshaft cover seal gasket.
2. Locate the camshaft cover to the cylinder head, fit 18 bolts and 2 studs, tighten to **14-16Nm** in the sequence shown, and check the torque.

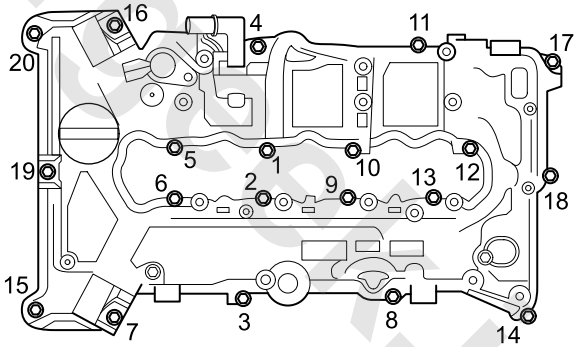

S1113688

3. Fix 2 PCV valve assemblies to the camshaft cover respectively, fit 1 bolt for each, tighten to **8-12Nm**, and check the torque.
4. Fit the PCV breathing tube assembly.
5. Fix a new PCV hard tube assembly with PCV valve and bolted joint to the camshaft cover, fit 1 bolt, tighten to **8-12Nm**, and check the torque.
6. Fix the PCV hard tube assembly joint to the turbocharger, fit 1 screw **8-10Nm**, and check the torque.
7. Fix the high-pressure fuel pipe clip to the camshaft cover, fit 1 bolt, tighten to **8-12Nm**, and check the torque.
8. Fix the harness staple bolt to the camshaft cover.

www.cargeek.ir

9. Fit the turbocharger water return pipe.

☞**Turbocharger Water Return Pipe Refit**

10. Fit the mechanical vacuum pump.

☞**Mechanical Vacuum Pump Refit**

11. Fit the camshaft position sensor.

☞**Camshaft Position Sensor**

12. Fit the solenoid valve of camshaft phase adjustment actuator.

☞**Camshaft Phase Adjustment Actuator Solenoid Valve Refit**

13. Fit the injector.

☞**Fuel Injector Refit**

14. Fit the engine cover.
15. Fit the oil dipstick.
16. Connect the battery negative.

Crankshaft Vibration Damper

Remove

1. Disconnect the battery negative cable.
2. Remove the bottom deflector.

☞**Bottom Deflector Remove**

3. Remove the front right wheel.

☞**Wheel Remove**

4. Remove the front right wheelhouse lining.

☞**Front Wheelhouse Lining Remove**

5. Remove auxiliary drive belt.

☞**Auxiliary Drive Belt Remove**

6. Fix the crankshaft vibration damper with special tool **TEN00135**.

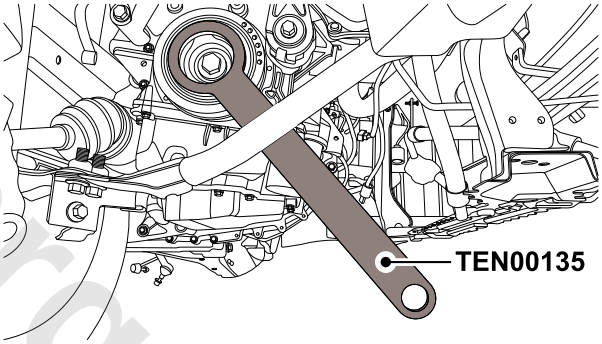

S1113689

7. Remove 1 bolt fixing the crankshaft vibration damper to the crankshaft.

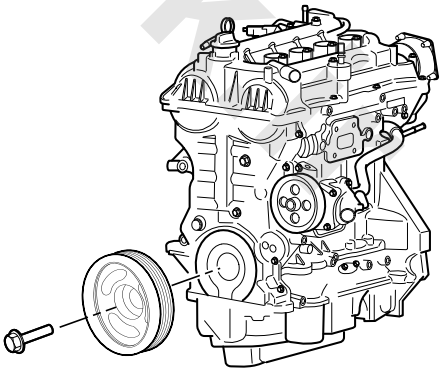

S1113690

8. Pull out and remove the crankshaft vibration damper with the special tool **TEN00136**.

www.cargeek.ir

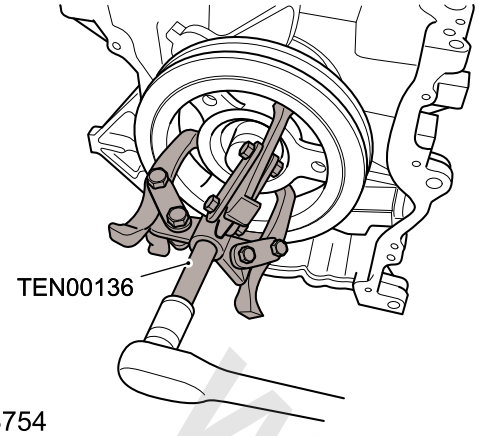

S1113754

Refit

1. Check to see if the locating key is properly located in the crankshaft.
2. Check the junction surface between crankshaft vibration damper and crankshaft for scratches, if any, replace the crankshaft vibration damper.

Tip: *After reused once, the crankshaft vibration damper must be replaced with a new one.*

3. Align the groove in the crankshaft vibration damper hub with the key on the crankshaft, and carefully push the crankshaft vibration damper to the crankshaft sprocket for contact.
4. Fix the crankshaft vibration damper with special tool **TEN00135**.
5. Fit the vibration damper bolt, tighten to **100Nm+(176-184)°**, and check the torque.
6. Fit the auxiliary drive belt.

Auxiliary Drive Belt Refit

7. Fit the front right wheelhouse lining.

Front Wheelhouse Lining Refit

8. Fit the front right wheel.

Wheel Refit

9. Fit the bottom deflector.

Bottom Deflector Refit

10. Connect the battery negative cable.

Front Timing Cover

Remove

1. Disconnect the battery negative.
2. Drain the engine oil.

Engine Oil Drain

3. Remove front crankshaft oil seal.

Front Crankshaft Oil Seal Remove

4. Remove the accessory belt tensioner.

Accessory Belt Tensioner Remove

5. Remove the camshaft cover.

Camshaft Cover Remove

6. Remove the right engine suspension.

Right Engine Suspension Remove

7. Remove 3 bolts fixing the front cover to the upper oil pan.
8. Remove 15 bolts fixing the front timing cover to the cylinder block.

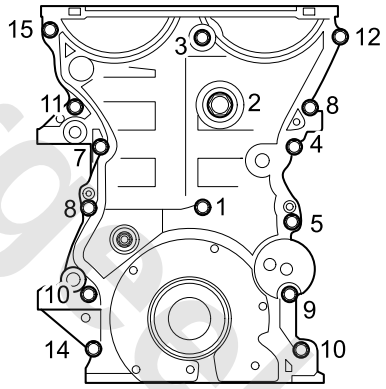

S1113691

Refit

1. Clean the front timing cover junction surface, and ensure that there is no foreign material.
2. Apply sealant to the front cover.

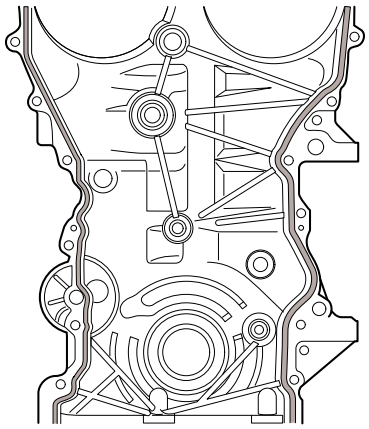

S1113692

3. Locate the front timing cover to the cylinder block through 2 locating pins.

www.cargeek.ir

4. Fit 15 bolts respectively in the sequence shown, and pretighten to 5Nm.

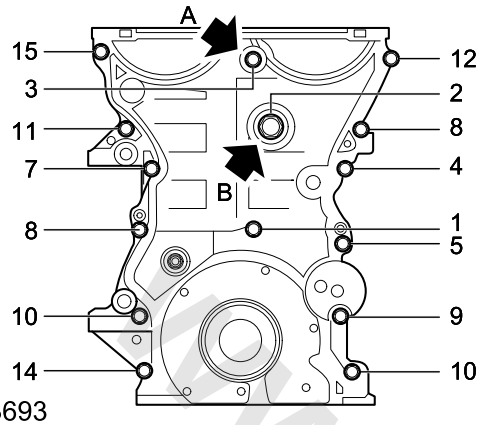

S1113693

5. Tighten 1 to **14-16Nm**, and check the torque.
6. Tighten 2 to **51-65Nm**, and check the torque.
7. Tighten 3–15 to **14-16Nm**, and check the torque.
8. Fit 3 oil pan bolts, tighten to **8-12Nm** and check the torque.
9. Fit the right engine suspension.

Right Engine Suspension Refit

10. Fit the camshaft cover.

Camshaft Cover Refit

11. Fit the accessory belt tensioner.

Accessory Belt Tensioner Refit

12. Front Crankshaft Oil Seal

Front Crankshaft Oil Seal Refit

13. Refill engine oil.

Engine Oil Refill

14. Connect the battery negative.

Intake and Exhaust Valves

Remove

1. Remove the cylinder head.

Cylinder Head Remove

2. Compress the valve spring with the valve removal tool.

Warning: *The compressed valve spring exerts huge tension on the valve spring compressor. The valve spring improperly compressed by the valve spring compressor or released from the valve spring compressor can be ejected from the valve spring compressor by huge tension. Take care when compressing or releasing the valve spring with the valve spring compressor, and when removing or fitting the valve stem key, or personal injury may occur.*

Warning: *Do not compress the valve spring to below 24.0mm. Exposure to the position between the valve spring retainer and valve stem seal may cause potential damage to the valve stem seal.*

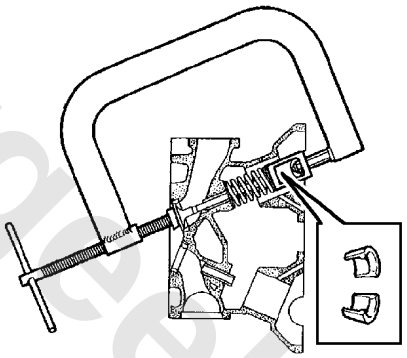

S103300

3. Remove the lock clip, loosen the valve spring, and remove the valve removal tool.
4. Remove the valve spring, valve spring cover and valve.

Caution: *Mark immediately after removing the parts. Mark the position, direction or orientation as needed.*

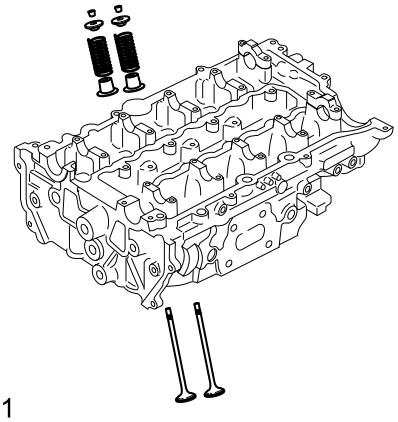

S1113831

www.cargeek.ir

5. Remove the valve oil seal.

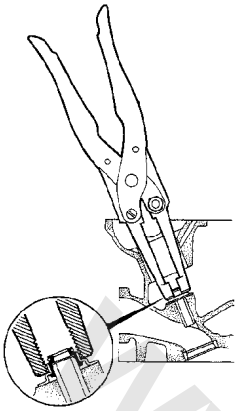

S103302

Refit

1. Check the valve mechanism.

Valve Mechanism Check

2. Ensure that the valve, valve spring, spring cap and lock clamp are clean.
3. Lubricate the valve and valve stem oil seal.
4. Fit the valve stem oil seal to the valve guide pipe.
5. Fit the valve, install the spring and spring cover, and fix the valve disassembling tool to the valve and compression spring.
6. Compress the valve spring with the valve disassembling tool, fit the valve spring lock clamp, and remove the valve disassembling tool.
7. Fit the cylinder head.

Cylinder Head Refit

Timing Chain

Remove

1. Disconnect the battery negative.
2. Drain engine oil.

Engine Oil Drain

3. Remove the camshaft cover.

Camshaft Cover Remove

4. Remove the front timing cover.

Front Timing Cover Remove

5. Press the timing chain tensioner in place, and lock with stop pin.
6. Remove 2 bolts securing the timing chain upper guide rail to the cylinder head and then remove the timing chain upper guide rail.
7. Remove 1 bolt securing the tensioner guide rail to the intake side of engine, and remove the tensioner guide rail.
8. Remove 3 bolts securing the timing chain guide rail to the exhaust side of engine and then remove the timing chain guide rail.
9. Remove the timing chain.

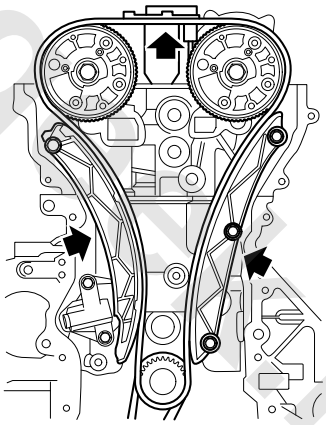

S1113694

10. Remove 1 bolt securing the oil nozzle to the cylinder block, and remove the oil nozzle.

Refit

1. Secure the oil nozzle on the cylinder block, fit 1 bolt and tighten to **8-12Nm**, and check the torque.
2. Rotate the intake and exhaust camshafts to place their timing marks at 12 o'clock position respectively, and secure them with special tool **TEN00134**.

www.cargeek.ir

www.cargeek.ir

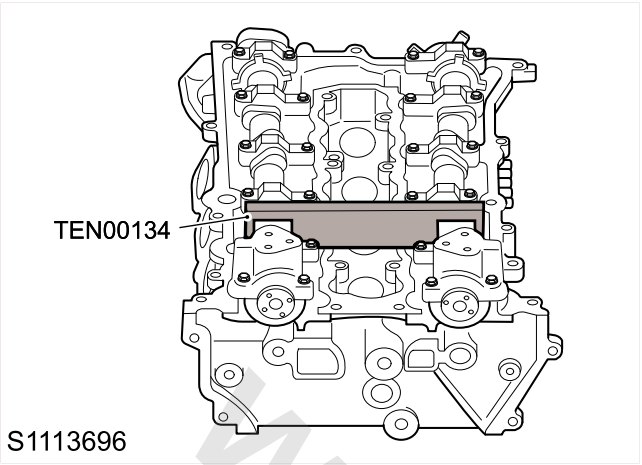

3. Rotate the crankshaft to place the timing mark at 6 o'clock position, and secure it with special tool **TEN00135**.

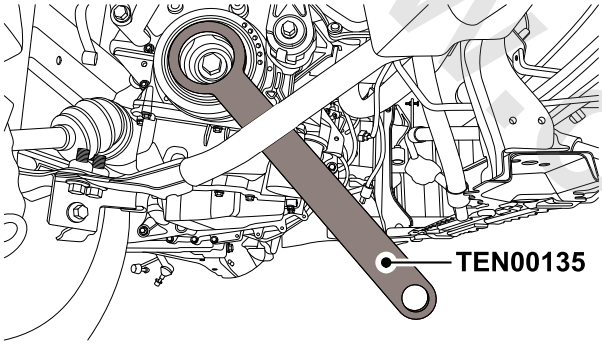

4. Fit the timing chain.

Caution: *Make sure the correct timing chain ring is aligned with the timing mark. The colors of actuator timing chain ring are identical, while the color of crankshaft sprocket timing chain ring is unique.*

5. Align the first timing chain ring with intake camshaft timing mark.
6. Align the second timing chain ring with exhaust camshaft timing mark.
7. Align the last timing chain ring with crankshaft sprocket timing mark.
8. Secure the timing chain guide rail to the exhaust side of engine, fit 3 bolts and tighten to **8-12Nm**, then check the torque.
9. Secure the tensioner guide rail to the intake side of engine, fit 1 bolt and tighten to **21-29Nm**, then check the torque.
10. Secure the timing chain upper guide rail to the cylinder head, fit 2 bolts and tighten to **8-12Nm**, then check the torque.
11. Pull out the timing chain tensioner stop pin to allow the timing chain system to tension.
12. Refit the front timing cover.

Front Timing Cover Refit

13. Refit the camshaft cover.

Camshaft Cover Refit

14. Refill the engine oil.

Engine Oil Refill

15. Connect the battery negative.
16. Place the ignition switch in ON, and use **VDS** to perform "**ECM** Adaption Reset".
17. Wait for 2-5 seconds, and turn off the ignition switch, then re-start the vehicle.

www.cargeek.ir

Camshaft Phase Regulation Actuator

Remove

1. Disconnect the battery negative.
2. Drain engine oil.

Engine Oil Drain

3. Remove the timing chain.

Timing Chain Remove

4. Lock the intake and exhaust camshafts with special tool **TEN00134**.

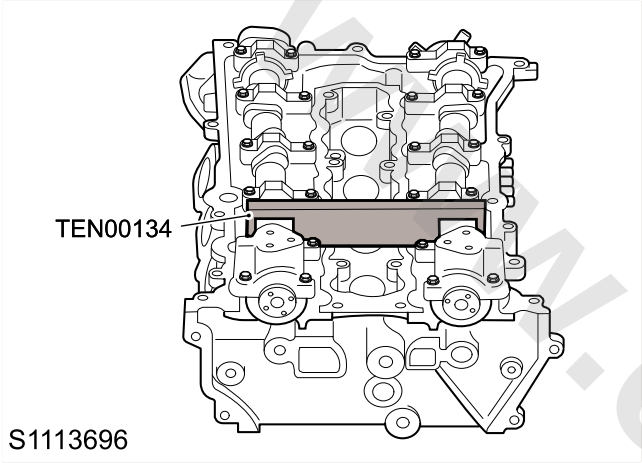

5. Remove 1 bolt securing the intake camshaft phase regulation actuator to the camshaft, then remove the intake camshaft phase regulation actuator.
6. Remove 1 bolt securing the exhaust camshaft phase regulation actuator to the camshaft, then remove the exhaust camshaft phase regulation actuator.

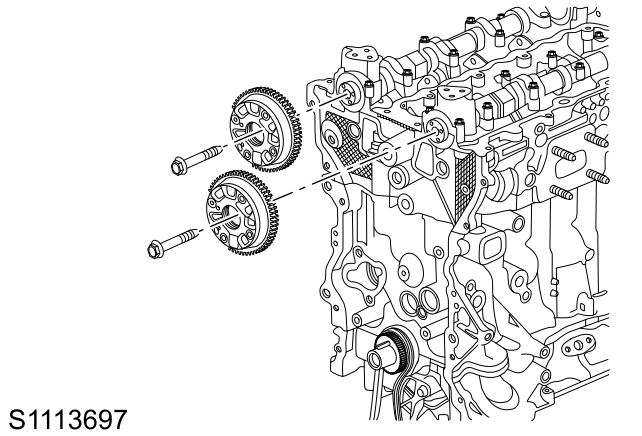

Refit

1. Secure the exhaust camshaft phase regulation actuator to the camshaft, fit 1 bolt, tighten to **20Nm+90°** and check the torque.
2. Secure the intake camshaft phase regulation actuator to the camshaft, fit 1 bolt, tighten to **20Nm+90°** and check the torque.
3. Fit the timing chain.

Timing Chain Refit

4. Refill the engine oil.

Engine Oil Refill

5. Connect the battery negative.
6. Place the ignition switch in ON, and use **VDS** to perform "**ECM** Adaption Reset".
7. Wait for 2-5 seconds, and turn off the ignition switch, then re-start the vehicle.

www.cargeek.ir

Timing Chain Tensioner

Remove

1. Drain the engine oil.

☞ **Engine Oil Drain**

2. Remove the timing chain.

☞ **Timing Chain Remove**

3. Remove 2 bolts fixing the timing chain tensioner to the cylinder block, remove the timing chain tensioner, and discard the gasket.

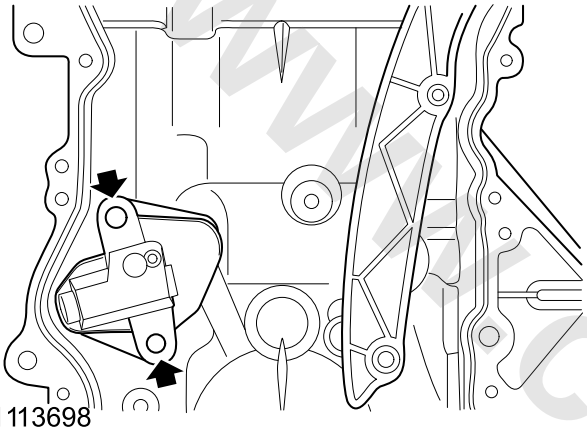

S1113698

Refit

1. Fit a new gasket, fix the timing chain tensioner to the cylinder block, fit 2 bolts, tighten to **21-29Nm**, and check the torque.
2. Fit the timing chain.

☞ **Timing Chain Refit**

3. Refill engine oil.

☞ **Engine Oil Refill**

Crankshaft Sprocket

Remove

1. Drain the engine oil.

☞ **Engine Oil Drain**

2. Remove the timing chain.

☞ **Timing Chain Remove**

3. Remove the oil pan.

☞ **Oil Pan Remove**

4. Remove 1 bolt fixing the oil pump drive chain tensioner to the cylinder block, and remove the oil pump drive chain tensioner.
5. Loosen 4 oil pump bolts.
6. Tilt the oil pump, and remove the oil pump drive chain.

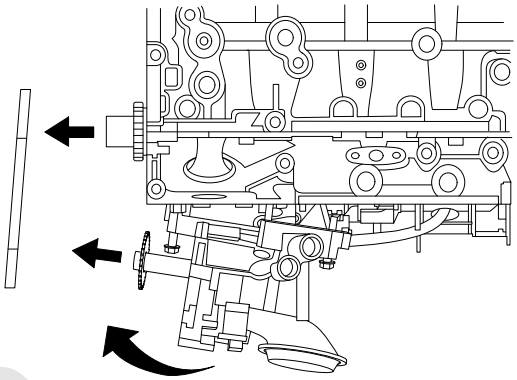

S1113699

7. Remove the crankshaft sprocket, and remove the sprocket flat key.

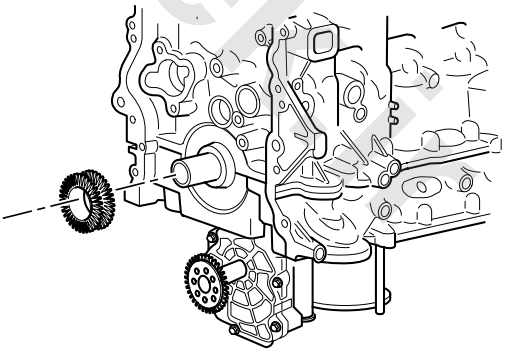

S1113700

Refit

1. Fit the flat key to the crankshaft, and fit the crankshaft sprocket to the crankshaft.
2. Tilt the oil pump, and fit the oil pump drive chain.
3. Tighten the 4 oil pump bolts to **9-11Nm**, and check the torque.
4. Fix the oil pump drive chain tensioner to the cylinder block, fit 1 bolt, tighten to **8-12Nm**, and check the torque.

www.cargeek.ir

www.cargeek.ir

5. Fit the oil pan.

Oil Pan Refit

6. Fit the timing chain.

Timing Chain Refit

7. Refill engine oil.

Engine Oil Refill

Camshaft

Remove

1. Drain engine oil.

Engine Oil Drain

2. Remove camshaft phase regulation actuator.

Camshaft Phase Regulation Actuator Remove

3. Release 12 retaining bolts of intake camshaft and exhaust camshaft bearing covers by half round each.
4. Remove the bearing cover.

Caution: *Observe the marking on the bearing cover. The marking is made on each bearing cover to identify its position.*

5. Remove the intake/exhaust camshaft assembly.

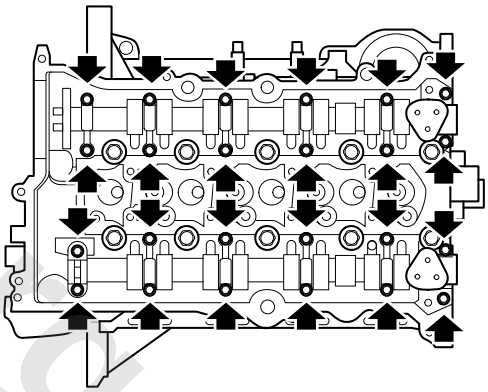

S1113701

Refit

1. Clean the camshaft base, bearing cover, bearing cover bolt and camshaft, and blow with compressed air.
2. Fit the exhaust camshaft and intake camshaft to the camshaft base. Make sure that the notch at the front of camshaft is located at 12 o'clock position.
3. Before fitting the camshaft cover, rotate the oil seal in No. 1 camshaft journal notch to make the interface at appr. 12 o'clock position.
4. Fit the bearing cover and pre-tension with hand.
5. Fit the front bearing cover and pre-tension with hand.
6. In the sequence as shown, tighten the exhaust camshaft and intake camshaft bearing cover bolts to **10-14Nm** with the increment of 3 rounds, and check the torque.

www.cargeek.ir

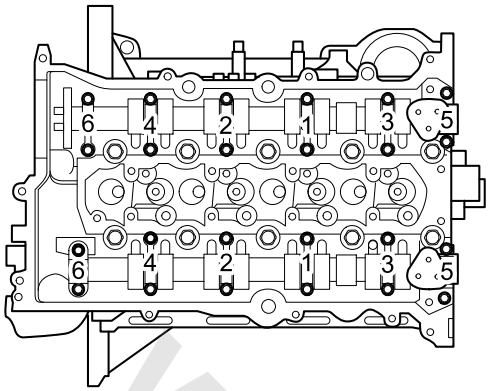

S1113702

7. Refit camshaft phase regulation actuator.

☞ **Camshaft Phase Regulation Actuator Refit**

8. Refill the engine oil.

☞ **Engine Oil Refill**

9. Place the ignition switch in ON, and use **VDS** to perform "**ECM** Adaption Reset".
10. Wait for 2-5 seconds, and turn off the ignition switch, then re-start the vehicle.

Hydraulic Tappets

Remove

1. Drain the engine oil.

☞ **Engine Oil Drain**

2. Remove the camshaft.

☞ **Camshaft Remove**

3. Remove the valve drive rocker arm (2).

Caution:

1 The components must be orderly isolated, marked or arranged to ensure that they are fitted in the original positions, and take preventive measures to prevent parts interchange.

2 Mark immediately after removing the parts. Mark the position, direction or orientation as needed.

4. Remove the valve hydraulic tappet (1).

Caution:

1 The components must be orderly isolated, marked or arranged to ensure that they are installed in the original positions, and take preventive measures to prevent parts interchange.

2 Mark immediately after removing the parts. Mark the position, direction or orientation as needed.

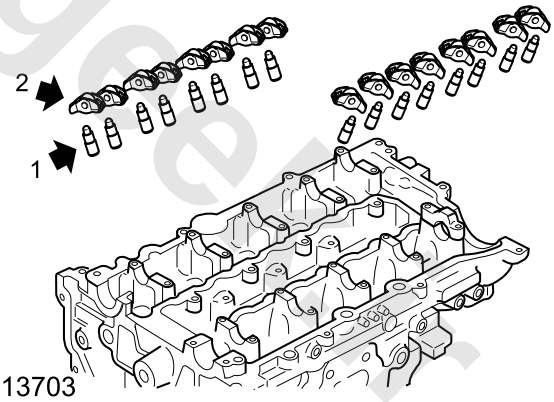

S1113703

Refit

1. Clean the valve drive rocker arm, valve hydraulic tappet and seat hole, and coat the surface with clean lubricating oil.
2. Fit the valve hydraulic tappet into the seat hole in the cylinder head.
3. Fit the valve drive rocker arm to the valve tip and valve hydraulic tappet.

Caution: *The used gap adjuster arm must be returned to the initial position of the camshaft. If the camshaft has been replaced, the gap adjuster arm driven by the camshaft must also be replaced.*

4. Fit the camshaft.

www.cargeek.ir

www.cargeek.ir

Camshaft Refit

5. Refill engine oil.

Engine Oil Refill

Intake Manifold

Remove

1. Disconnect the battery negative.
2. Remove the electronic throttle.

Electronic Throttle Remove

3. Loosen the clamps, and disconnect the connecting hose of the activated carbon canister solenoid valve.
4. Disconnect the connector of the activated carbon canister solenoid valve.
5. Disconnect the intake manifold end hose of the activated carbon canister solenoid valve.
6. Remove the harness fixed to the intake manifold.
7. Remove 1 screw fixing the manifold absolute pressure and temperature sensor to the intake manifold, and remove the manifold absolute pressure and temperature sensor (1).
8. Remove the activated carbon canister solenoid valve and hose (2).

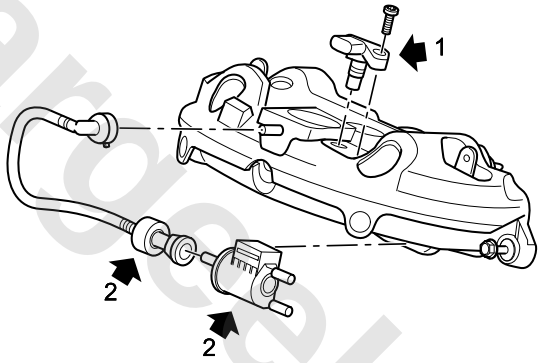

S1113705

9. Loosen two clips fixing the intake manifold cover assembly to the intake manifold, and remove the intake manifold cover assembly.

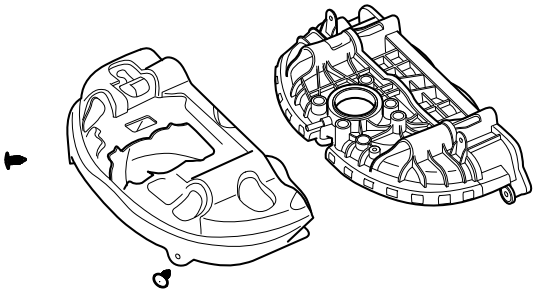

S1113830

10. Remove 5 bolts fixing the intake manifold to the cylinder head, remove the intake manifold, and discard the washer.

www.cargeek.ir

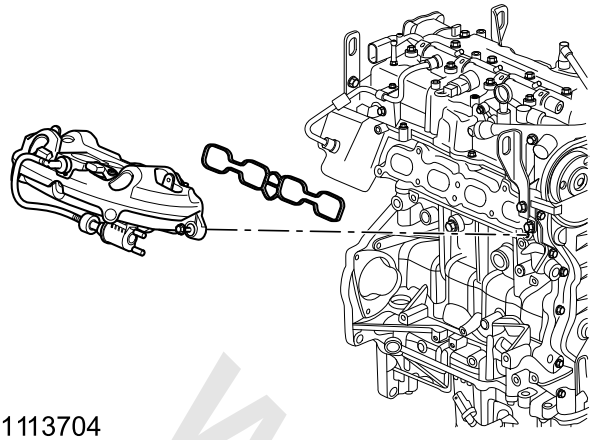

S1113704

Refit

1. Clean intake manifold mating face.
2. Fit a new intake manifold gasket, fix the intake manifold to the cylinder head, fit 5 bolts, tighten to **8-12Nm** in the sequence shown, and check the torque.

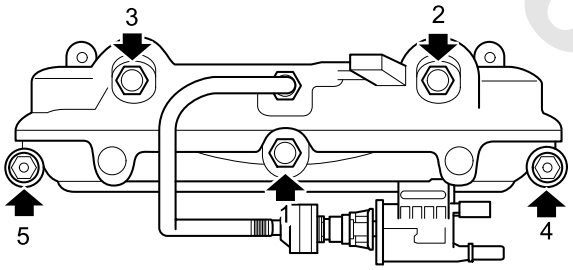

S1113706

3. Fix the intake manifold cover assembly to the intake manifold, and fix it with buckles.
4. Fit the activated carbon canister solenoid valve and hose to the intake manifold.
5. Fix the manifold absolute pressure and temperature sensor to the intake manifold, fit 1 bolt, tighten to **4-5Nm** and check the torque.
6. Fix the harness to the intake manifold.
7. Connect the intake manifold end hose of activated carbon canister solenoid valve.
8. Connect the connector of the activated carbon canister solenoid valve.
9. Connect the connecting hose of activated carbon canister solenoid valve, and fix it with clamps.
10. Fit the throttle.

Electronic Throttle Refit

11. Connect the battery negative.

Piston

Remove

1. Remove the connecting rod.

Connecting Rod Remove

2. Using an expander to remove piston rings (1).
3. Remove 2 piston pin clamping springs (2).
4. Remove the piston pin (3).
5. Disconnect the piston from the connecting rod small end, and remove the piston.

Caution: *Mark immediately after removing the parts. Mark the position, direction or orientation as needed.*

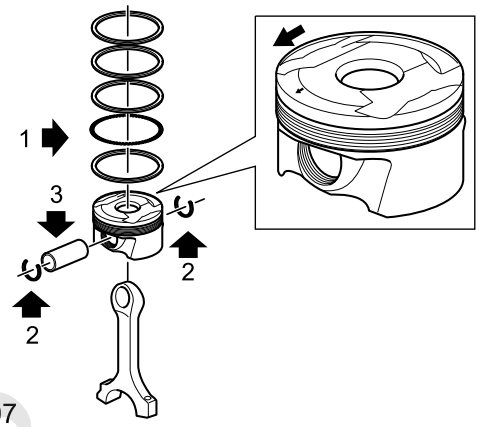

S1113707

Refit

1. Check the piston connecting rod.

Piston Connecting Rod Check

2. Fit the piston pin clamping spring at one side into the pin hole clamping spring slot.
3. Place the connecting rod small end to the inner side of the piston pin boss, after application of lubricating oil, fit the piston pin into the piston pin hole and connecting rod small end, and fit the piston pin clamping spring on the other side into the pin hole clamping spring slot.

Caution: *The forward mark at the top of the piston must be consistent with the forward mark on the connecting rod.*

4. Fit the oil ring, top/second compression ring into the piston ring groove from bottom to top with an expander.

Caution: *The piston ring mark points to the top surface of the piston.*

5. Fit the connecting rod.

Connecting Rod Refit

www.cargeek.ir

Connecting Rod

Remove

1. Remove the cylinder head.

☞ **Cylinder Head Remove**

2. Remove the oil pump.

☞ **Oil Pump Remove**

3. Remove 1 bolt fixing the crankcase return pipe to the lower crankcase, and remove the lower crankcase oil return pipe.
4. Remove 3 bolts fixing the crankshaft oil guide plate to the lower crankcase, and remove the crankshaft oil guide plate.

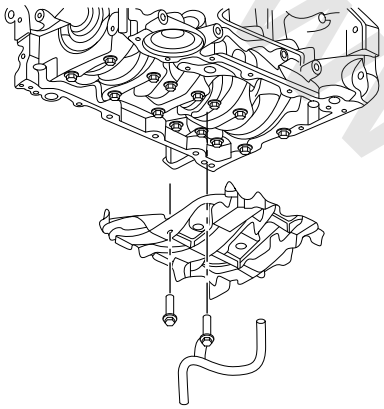

S1113674

5. Rotate the crankshaft so that the piston rod assembly is at the bottom dead center of the cylinder.
6. Remove 2 bolts fixing the connecting rod big end shell cover to the connecting rod.

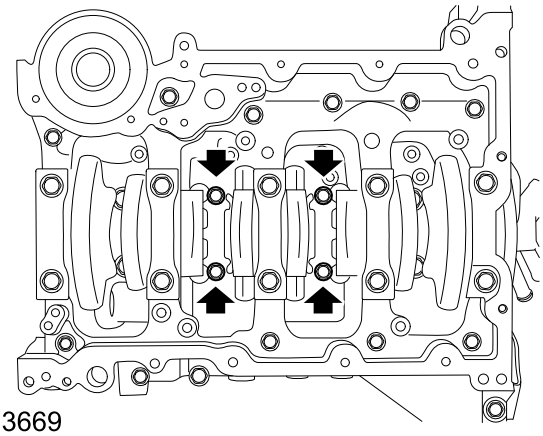

S1113669

7. Remove the connecting rod big end shell cover, and remove the bearing shell.
8. Disconnect the connecting rod big end from the crankshaft, and remove the bearing shell.
9. Remove carbon deposit at the top of the cylinder liner opening.
10. Push the piston to the top of the cylinder liner.
11. Ensure that the connecting rod did not come into contact with the cylinder opening, and carefully push the piston assembly out from the cylinder liner.

Caution: *Carefully mark each piston and corresponding cylinder liner.*

12. Refit the connecting rod big end cap to the connecting rod, and gently tighten the connecting rod bolt.

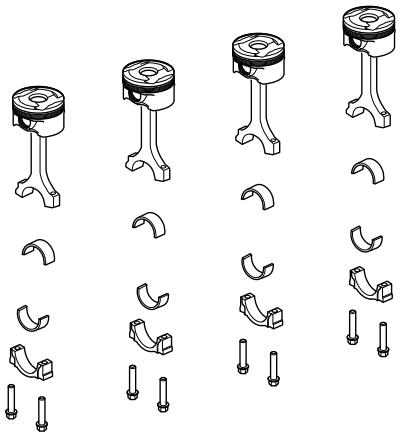

S1113708

Refit

1. Check the piston connecting rod.

☞ **Piston Connecting Rod Check**

2. Ensure piston rings are free to rotate, the gap between the two air rings shall form an angle of 180° and away from the piston thrust side.
3. The notch of the oil ring and spring shall form an angle of 120°.

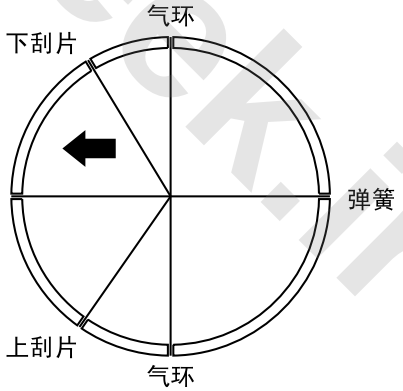

S1113760

4. Lubricate the cylinder liner opening, piston and piston ring with engine oil, and ensure the piston ring notch is correctly positioned.
5. Remove the connecting rod big end shell cover.
6. Fit the bearing shell to the connecting rod big end, and apply engine oil.
7. Fit the piston installer to the piston. Make the front mark on the piston face the front of the engine, and fit the piston into the cylinder liner.
8. Push the piston into the cylinder liner until it is aligned

www.cargeek.ir

with the upper surface of the cylinder liner.

9. Remove the piston installer.

Caution: *Before fitting the connecting rod big end bearing bush and connecting rod big end cap, do not push the piston below the upper surface of the cylinder liner.*

10. Rotate the crankshaft so that the crankshaft connecting rod journal is at the bottom dead center.
11. Push the piston connecting rod assembly to the bottom dead center at the bottom of the cylinder liner, and make the connecting rod big end fit the crankshaft connecting rod journal.
12. Fit the bearing shell to the connecting rod big end shell cover, fix the connecting rod big end shell cover to the connecting rod big end, fit 2 bolts, tighten to **25Nm+75°**, and check the torque.

Caution: *Make the connecting rod big end shell cover boss face the rear end of the engine; the letter "AA" at the side surface of the shell cover and that of the connecting rod must be on the same side.*

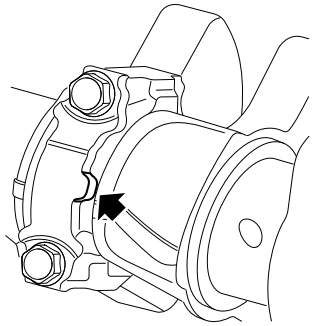

S1113763

13. Rotate the crankshaft and ensure free rotation of the crankshaft connecting rod.
14. Fix the crankshaft oil guide plate to the lower crankcase, fit 3 bolts, tighten to **8-12Nm** in the sequence shown, and check the torque.

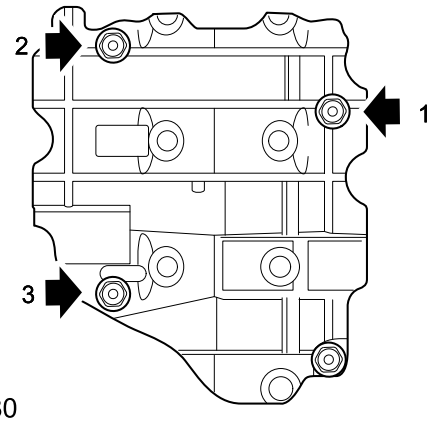

S1113680

15. Fix the crankcase oil return pipe to the lower crankcase, fit 1 bolt, tighten to **8-12Nm**, and check the torque.
16. Fit the oil pump.

☞Oil Pump Refit

17. Fit the cylinder head.

☞Cylinder Head Refit

www.cargeek.ir

Oil Pump

Remove

1. Drain the engine oil.

☞ **Engine Oil Drain**

2. Remove the strainer.

☞ **Strainer Remove**

3. Remove 4 bolts fixing the oil pan to the lower crankcase.
4. Toggle the oil pump drive chain tensioner, tilt the oil pump, and disconnect the drive chain from the sprocket.

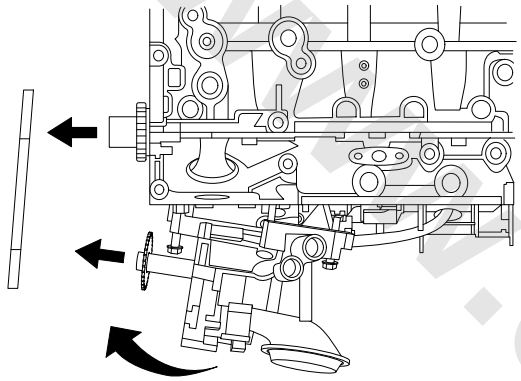

S1113699

5. Remove the oil pump, and discard the washer.
6. Loosen the clip, and remove the electronic flow control valve of the oil pump.

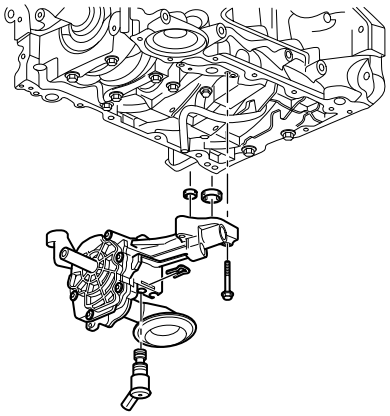

S1113710

Refit

1. Clean the junction surface between oil pump and lower crankcase.
2. Fit the oil pump electronic flow control valve and fix it with clips.
3. Toggle the oil pump drive chain tensioner, tilt the oil pump, and fit the drive chain to the sprocket.
4. Fit a new washer, apply clean lubricating oil, fix the oil pump to the lower crankcase, fit 4 bolts, tighten to **9-11Nm**, and check the torque.
5. Fit the strainer.

☞ **Strainer Refit**

6. Refill engine oil.

☞ **Engine Oil Refill**

www.cargeek.ir

www.cargeek.ir

Engine Oil Strainer

Remove

1. Drain the engine oil.

Engine Oil Drain

2. Remove the oil pan.

Oil Pan Remove

3. Remove 2 bolts fixing the strainer to the oil pump, remove the strainer, and discard the O-ring.

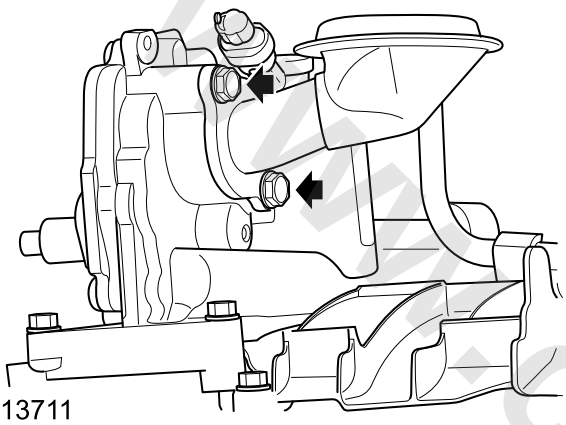

S1113711

Refit

1. Fit a new O-ring, fix the strainer to the oil pump, fit 2 bolts, tighten to **8-12Nm**, and check the torque.
2. Fit the oil pan.

Oil Pan Refit

3. Refill engine oil.

Engine Oil Refill

Front Crankshaft Oil Seal

Remove

1. Drain the engine oil.

Engine Oil Drain

2. Remove the crankshaft vibration damper.

Crankshaft Vibration Damper Remove

3. Remove the front crankshaft oil seal.

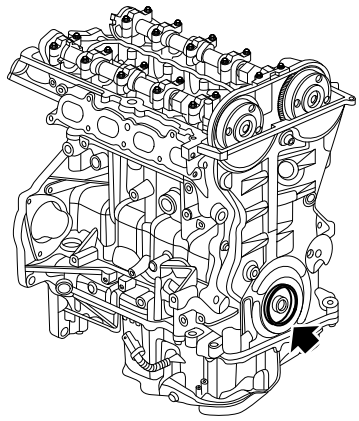

S1113712

Refit

1. Clean the oil seal junction surface, and ensure that there is no foreign material.
2. Fit the handle with the **TEN00141** and fit the front crankshaft oil seal with the **TEN00142**.

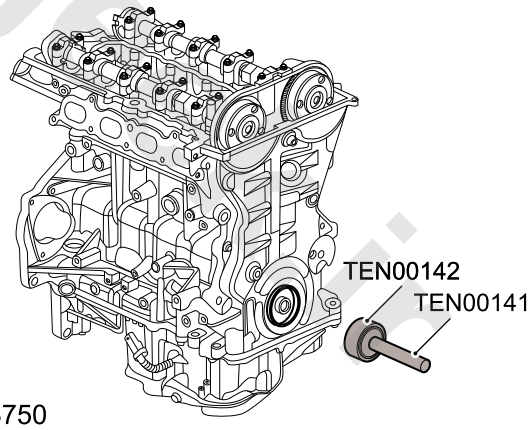

S1113750

3. Fit the crankshaft vibration damper.

Crankshaft Vibration Damper Refit

4. Refill engine oil.

Engine Oil Refill

www.cargeek.ir

www.cargeek.ir

Rear Crankshaft Oil Seal

Remove

1. Disconnect the battery negative.
2. Drain the engine oil.

Engine Oil Drain

3. Remove the flywheel.

Flywheel-MT Remove
Flywheel-AT Remove

4. Remove the rear crankshaft oil seal.

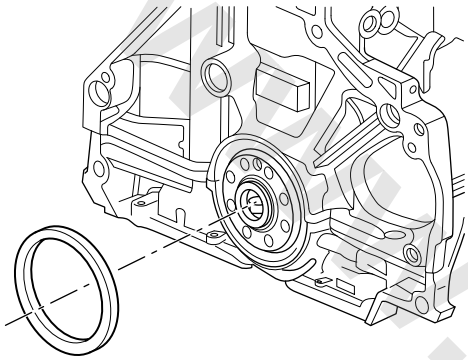

S1113714

Refit

1. Clean the mounting hole of the rear crankshaft oil seal.
2. Fit the **TEN00144** into the crankshaft mounting hole at the rear end of the engine.
3. Fit the handle with the **TEN00141** and fit the rear crankshaft oil seal to the rear end of the crankshaft with the **TEN00143** through the **TEN00144**.

Caution: *The oil seal must be fitted in the correct direction. The outward side shall be marked with "This Side Outwards".*

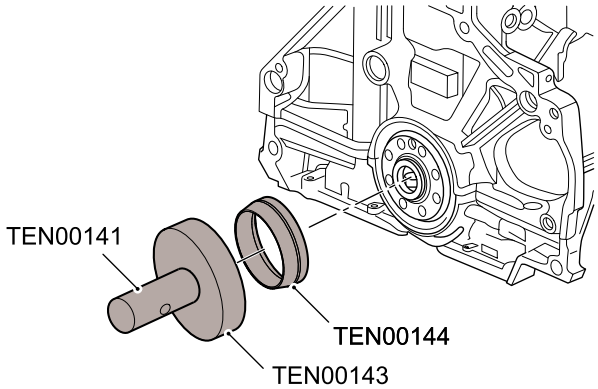

S1113751

4. Fit the flywheel.

Flywheel-MT Refit
Flywheel-AT Refit

5. Refill engine oil.

Engine Oil Refill

Vacuum Pump

Remove

1. Remove 1 bolt fixing the throttle air inlet pipe to the cylinder head (4).

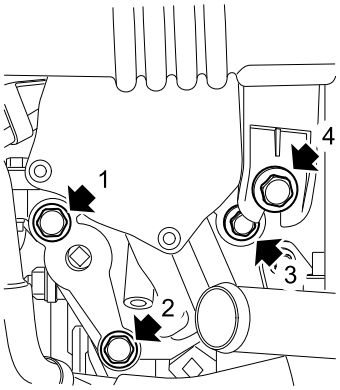

S1113762

2. Disconnect the vacuum tube on the mechanical vacuum pump.
3. Remove 3 bolts fixing the vacuum pump to the cylinder head, remove the vacuum pump, and discard the liner.

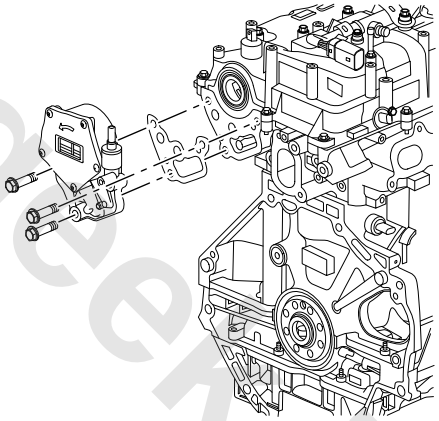

S1113716

Refit

1. Clean the junction surface between the vacuum pump and cylinder head.
2. Fit a new liner, position the vacuum pump by 2 locating pins to the cylinder head, fit 3 bolts, tighten to **21-29Nm** in the sequence of 1-2-3 shown, and check the torque.

Caution: *Ensure that the vacuum pump transmission gear is aligned with the camshaft end, and ensure that the vacuum pump is flush with the cylinder head before fitting the bolt.*

www.cargeek.ir

www.cargeek.ir

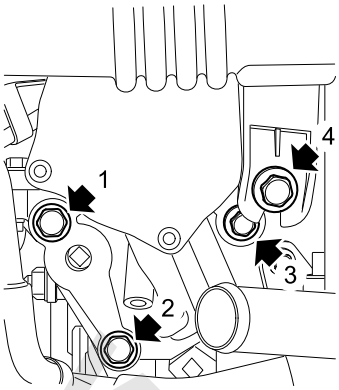

S1113762

3. Connect the vacuum tube on the vacuum pump.
4. Fix the throttle air inlet pipe to the cylinder head, fit 1 bolt, tighten to **7–10Nm**, and check the torque.

Seal-Vacuum Pump

Remove

1. Remove vacuum pump。

☞**Vacuum pump remove**

2. Use screwdriver remove the seal of vacuum pump.

Caution: *Use adhesive tape pack the head of the screwdriver to protect the surface of the cylinder head.*

Refit

1. Use special tool **TEN00141**and hammer install the seal to back of the cylinder head.

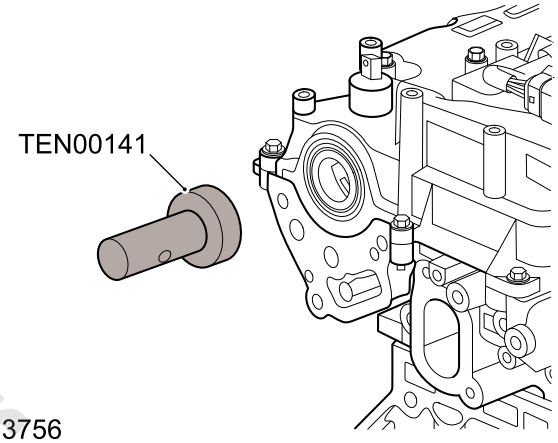

S1113756

2. Refit the vacuum pump.

☞**Vacuum pump refit**

www.cargeek.ir

Turbocharger

Remove

1. Disconnect the battery negative.
2. Drain the engine coolant.

☞ **Engine Coolant Drain**

3. Drain the engine oil.

☞ **Engine Oil Drain**

4. Remove the three-way catalytic converter.

☞ **Three-way Catalytic Converter Remove**

5. Remove the A/C compressor.

☞ **A/C Compressor Remove**

6. Remove the turbocharger water return pipe.

☞ **Turbocharger Water Return Pipe Remove**

7. Remove the turbocharger control solenoid valve.

☞ **Turbocharger Control Solenoid Valve Remove**

8. Remove the turbocharger intake pipe.

☞ **Turbocharger Intake Pipe Remove**

9. Loosen the clamp, and disconnect the intercooler inlet pipe from the turbocharger.
10. Remove 1 bolt fixing the PCV hose coupler to the turbocharger, and disconnect the PCV coupler (1).
11. Remove 1 hollow bolt fixing the turbocharger oil inlet pipe to the turbocharger (2), and discard two copper gaskets.

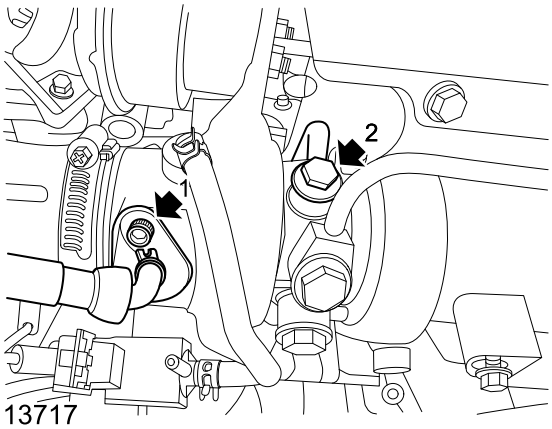

S1113717

12. Remove 1 hollow bolt fixing the turbocharger water inlet pipe to the turbocharger, and discard two copper gaskets.
13. Remove 1 nut fixing the turbocharger water inlet pipe to the rear of the water pump, and remove the turbocharger water inlet pipe.

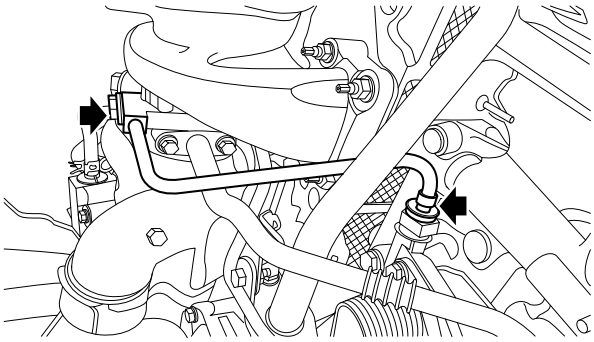

S1113719

14. Remove the pipeline fixing the turbocharger oil inlet pipe to the engine, and remove the turbocharger oil inlet pipe.
15. Remove 2 bolts fixing the turbocharger oil return pipe to the engine, remove the turbocharger oil return pipe, and discard the gasket.
16. Remove 2 bolts fixing the turbocharger oil return pipe to the turbocharger.

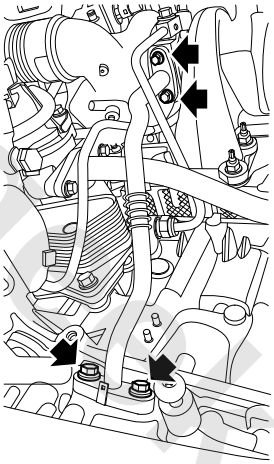

S1113718

17. Remove 4 nuts fixing the turbocharger to the engine, and remove the turbocharger and turbocharger heat shield.

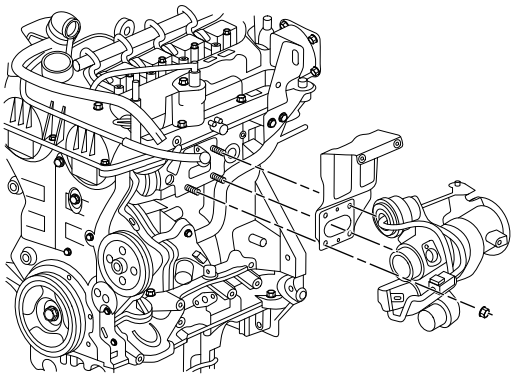

S1113720

Refit

1. Fix the turbocharger, turbocharger heat shield to the

www.cargeek.ir

engine, fit 4 nuts, diagonally tighten to **21-29Nm**, and check the torque.

2. Fit a new gasket, fix the turbocharger oil return pipe to the turbocharger, fit 2 bolts, tighten to **9-11Nm**, and check the torque.
3. Fit a new gasket, fix the turbocharger oil return pipe to the engine, fit 2 bolts, tighten to **8-12Nm**, and check the torque.
4. Fix the turbocharger oil inlet pipe to the engine.
5. Fix the turbocharger water inlet pipe to the rear of the water pump.
6. Fix the turbocharger water inlet pipe to the turbocharger, fit 2 new copper gaskets and 1 hollow bolt, tighten to **31-39Nm**, and check the torque.
7. Fix the turbocharger oil inlet pipe to the turbocharger, fit 2 new copper gaskets and 1 hollow bolt, tighten to **18-22Nm**, and check the torque.
8. Fix the PCV hose joint to the turbocharger, fit 1 bolt, tighten to **8-10Nm**, and check the torque.
9. Connect the intercooler air intake pipe to the turbocharger, and fix it with clamps.
10. Fit the turbocharger intake pipe.

Turbocharger Intake Pipe Refit

11. Fit the turbocharger control solenoid valve.

Turbocharger Control Solenoid Valve Refit

12. Fit the turbocharger water return pipe.

Turbocharger Water Return Pipe Refit

13. Fit the A/C compressor.

A/C Compressor Refit

14. Fit the three-way catalytic converter.

Three-way Catalytic Converter Refit

15. Refill engine oil.

Engine Oil Refill

16. Refill engine coolant.

Engine Coolant Refill

17. Connect the battery negative.

Turbocharger Fuel Inlet Pipe

Remove

1. Drain the engine oil.

Engine Oil Drain

2. Remove the A/C compressor.

A/C Compressor Remove

3. Remove 3 bolts fixing the turbocharger heat shield to the turbocharger, and remove the turbocharger heat shield.

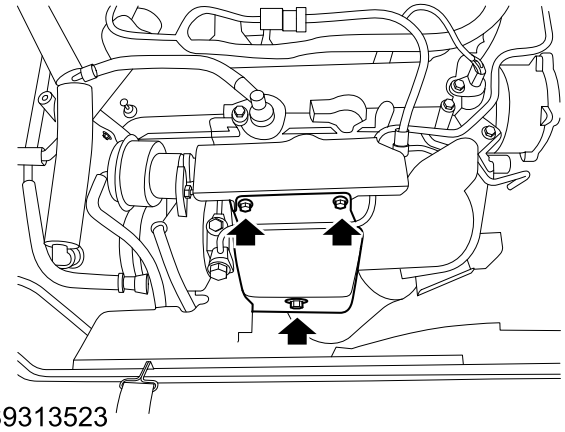

4. Remove 1 hollow bolt fixing the turbocharger oil inlet pipe to the turbocharger (2), and discard two copper gaskets.

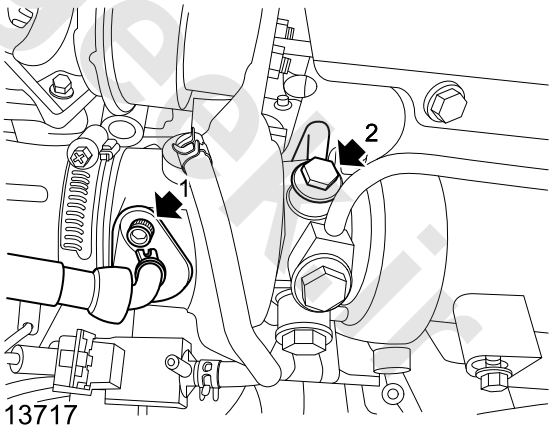

5. Remove the turbocharger oil inlet pipe clip, and remove the turbocharger oil inlet pipe.

Refit

1. Fix the turbocharger oil inlet pipe to the turbocharger pipe joint, and fix it with turbocharger oil inlet pipe clips.
2. Fix the turbocharger oil inlet pipe to the turbocharger, fit 2 new copper gaskets and 1 hollow bolt, tighten to **18-22Nm**, and check the torque.
3. Fix the three-way catalytic converter heat shield to the turbocharger, fit 3 bolts, tighten to **10-12Nm**, and check the torque.

www.cargeek.ir

4. Fit the A/C compressor.

A/C Compressor Refit

5. Refill engine oil.

Engine Oil Refill

Turbocharger Oil Return Pipe

Remove

1. Drain the engine oil.

Engine Oil Drain

2. Remove the three-way catalytic converter.

Three-way Catalytic Converter Remove

3. Remove 2 bolts fixing the turbocharger oil return pipe to the turbocharger.
4. Remove 2 bolts fixing the turbocharger oil return pipe to the engine, remove the turbocharger oil return pipe, and discard the gasket.

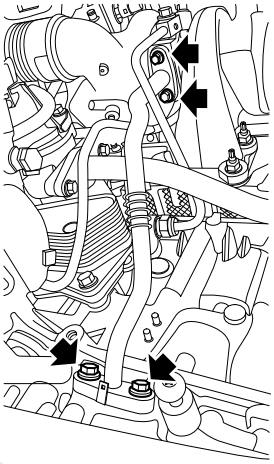

S1113718

Refit

1. Fit a new gasket, fix the turbocharger oil return pipe to the engine, fit 2 bolts, tighten to **8-12Nm**, and check the torque.
2. Fit a new gasket, fix the turbocharger oil return pipe to the turbocharger, fit 2 bolts, tighten to **9-11Nm**, and check the torque.
3. Fit the three-way catalytic converter.

Three-way Catalytic Converter Refit

4. Refill engine oil.

Engine Oil Refill

www.cargeek.ir

www.cargeek.ir

Turbocharger Water Inlet Pipe

Remove

1. Drain the engine coolant.

Engine Coolant Drain

2. Remove the three-way catalytic converter.

Three-way Catalytic Converter Remove

3. Remove 1 hollow bolt fixing the turbocharger water inlet pipe to the turbocharger, and discard two seal gaskets.
4. Remove 1 nut fixing the turbocharger water inlet pipe to the rear of the water pump, and remove the turbocharger water inlet pipe.

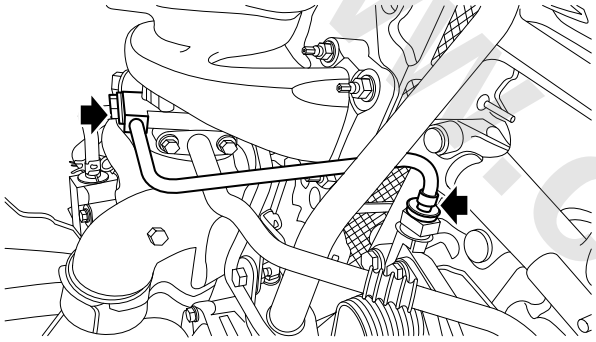

S1113719

Refit

1. Insert the turbocharger water inlet pipe into the fast port at the rear of the water pump.
2. Fix the turbocharger water inlet pipe to the turbocharger, fit 2 new gaskets and 1 hollow bolt, tighten to **31-39Nm**, and check the torque.
3. Fit the three-way catalytic converter.

Three-way Catalytic Converter Refit

4. Refill engine coolant.

Engine Coolant Refill

Turbocharger Water Return Pipe

Remove

1. Drain the engine coolant.

Engine Coolant Drain

2. Loosen the clamp, and disconnect the overflow pipe from the turbocharger water return pipe (3).
3. Loosen the clamp, and disconnect the turbocharger water return pipe from the water outlet assembly (5).
4. Loosen the clamp, and disconnect the turbocharger water return pipe from the bypass pipe assembly (4).
5. Remove 1 hollow bolt fixing the turbocharger water return pipe to the turbocharger (1), and discard two seal gaskets.
6. Remove 1 bolt fixing the water return pipe bracket to the camshaft cover (2), and remove the turbocharger water return pipe.

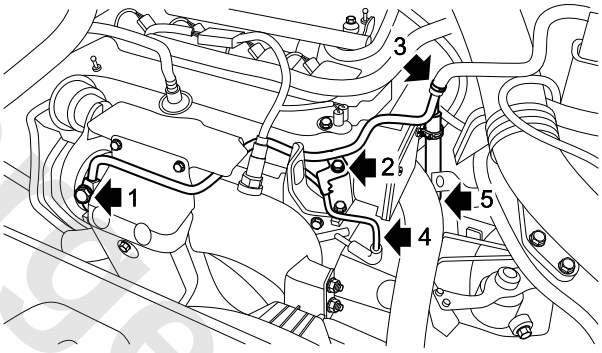

S1113721

Refit

1. Fix the turbocharger water return pipe to the turbocharger, fit 1 hollow bolt and 2 new seal gaskets, and pretighten.
2. Fix the water return pipe bracket to the camshaft cover,fit 1 bolt and pretighten.
3. Connect the turbocharger water return pipe to the bypass pipe assembly, and fix it with clamps.
4. Connect the turbocharger water return pipe to the water outlet pipe assembly, and fix it with clamps.
5. Connect the overflow pipe to the turbocharger water return pipe, and fix it with clamps.
6. Tighten the bracket bolt to **8-12Nm**, and check the torque.
7. Tighten the hollow bolt to **31-39Nm**, and check the torque.
8. Refill engine coolant.

Engine Coolant Refill

www.cargeek.ir

Water Outlet Assembly

Remove

1. Disconnect the battery negative.
2. Drain the engine coolant.

☞**Engine Coolant Drainage**

3. Disconnect the water temperature sensor connector of water outlet assembly.
4. Remove 1 bolt used for fixing the throttle air intake pipe to the cylinder head.
5. Loosen the clamp,and disconnect the radiator water inlet pipe from the water outlet assembly(1).
6. Loosen the clamp,and disconnect the bypass pipe from the water outlet assembly(2).
7. Loosen the clamp,and disconnect two heating water pipes from the water outlet assembly(3).
8. Loosen the clamp,and disconnect the turbocharger water return pipe from the water outlet assembly(4).
9. Remove 2 bolts used for fixing the water outlet assembly to the engine(5),remove the water outlet assembly,and discard the gasket.

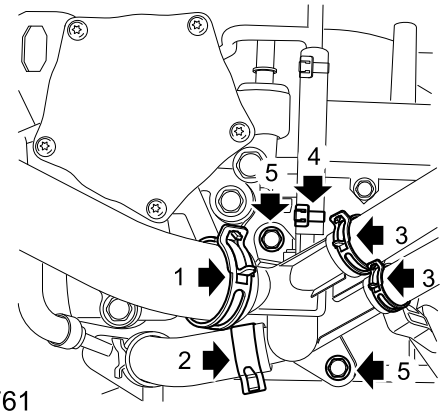

S1113761

Refit

1. Fit a new gasket,fix the water outlet assembly to the engine,fit 2 bolts,tighten them to**10–14Nm**,and check the torque.
2. Connect the turbocharger water return pipe to the water outlet assembly,and fix it with clamps.
3. Connect two heating water pipes to the water outlet assembly,and fix them with clamps.
4. Connect the bypass pipe to the water outlet assembly,and fix it with clamps.
5. Connect the radiator water inlet pipe to the water outlet assembly,and fix it with clamps.
6. Fix the throttle air inlet pipe to the cylinder head,fit 1 bolt,tighten it to**7–10Nm**,and check the torque.
7. Connect the water temperature sensor connector of water outlet assembly.
8. Fill the engine coolant.

☞**Engine Coolant Fill**

9. Connect the battery negative.

www.cargeek.ir

www.cargeek.ir

Oil Cooler

Remove

1. Drain the engine coolant.

Engine Coolant Drain

2. Drain the engine oil.

Engine Oil Drain

3. Remove the turbocharger intake pipe.

Turbocharger Intake Pipe Remove

4. Remove 4 bolts fixing the oil cooler to the water pump, remove the oil cooler, and discard the gasket.

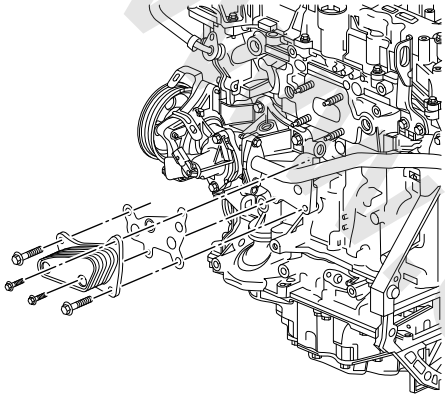

S1113726

Refit

1. Clean the junction surface between oil cooler and water pump, and ensure that there is no foreign material.
2. Fit a new gasket, fix the oil cooler to the water pump, fit two M6 bolts and two M8 bolts, tighten to **8-12Nm** and **22-28Nm** respectively, and check the torque.
3. Fit the turbocharger intake pipe.

Turbocharger Intake Pipe Refit

4. Refill engine oil.

Engine Oil Refill

5. Refill engine coolant.

Engine Coolant Refill

Cylinder Head Check

Valve Check

1. Remove the carbon deposition,engine oil and varnish on the valve.Clean all carbon depositions on valve head with a soft wire brush.Varnish can be removed by soaking in parts soaking solvent or equivalent.。

Tip: DO NOT use a wire brush on any part of the valve stem.

Tip: DO NOT grind or condition the intake valve.If the intake valve is out of specification, replace the valve.

2. Clean the valve guide pipe.
3. Check the valve stem for wear(4).
4. Check the valve lock plate groove for damage or wear(5).If the valve is damaged or worn,replace it.
5. Check the valve conical surface for burnout or cracking(1).If the component is damaged,check the relevant piston and cylinder head areas for damage.
6. Check the valve stem for any burr or scratch.Burrs and slight scratches can be removed by oil stone.
7. Use a V-shaped block to check the straightness of valve stem and check the valve cover for bend or deformation (3).Replace the bent or deformed valve.
8. Remove the deposit on the valve conical surface.Check the valve conical surface for any damage.
9. If there are damages on the conical surface,replace the valve.No machining of valve conical surface is allowed.If the valve is worn or damaged,replace it.
10. If the valve head is worn or the outer diameter and chamfer (2) exceeds the specified value,replace the valve.

Valve Mechanism Check

11. Slightly stack up the valve onto valve seat.
12. If the valve stem end (6) is worn,replace the valve.
13. If there is no obvious wear,pitting,scratches or deformation,measure and repair the valve to verify the valve specification.

Valve Mechanism Check

www.cargeek.ir

www.cargeek.ir

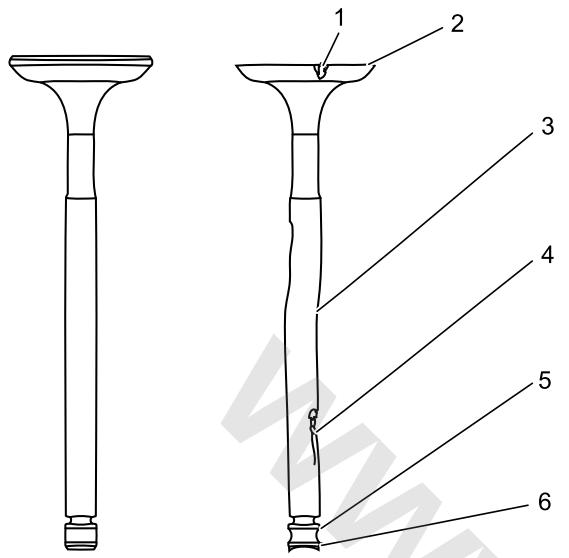

S1113264

Valve Guide Measurement

1. Measure the clearance between the valve stem (1) and guide pipe (2).Excessive clearance between valve stem and guide pipe may cause excessive engine oil consumption and valve breakage.Insufficient clearance may result in noise and valve blockage,which will affect the normal operation of the engine assembly.

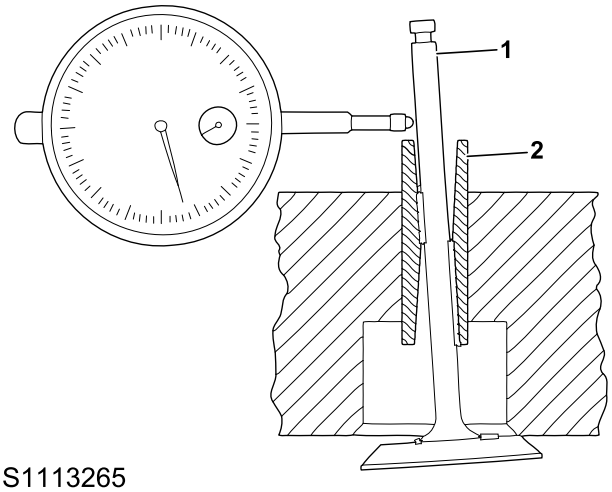

S1113265

2. Clamp the gauge to the cylinder head at the camshaft cover guide rail.
3. Locate the dial gauge so that the lateral movement (crossing with the cylinder head) of the valve stem will directly drive the dial gauge rod to move.The dial gauge must be located higher than the valve guide pipe when contacting the side of the valve stem.
4. Lower the valve head about 0.064mm from the valve seat.
5. Slightly apply pressure while moving the valve stem longitudinally to gain clearance readings, and compare with the standard values.。

Parameter

6. If the valve clearance is greater than the specified value and a new valve stem with standard diameter also fails to maintain the clearance within the specified range,it is necessary to replace the cylinder head.

Tip: *The abrasions 10mm from the bottom of valve guide pipe do not affect the normal operation.*

Valve Spring Cleaning and Check

1. Clean the valve spring with solvent.
2. Dry the valve spring with compressed air.

Warning: Refer to "Warning of goggles".

3. Check the valve spring for any ruptured spring coil or spring ring end.
4. Measure the valve spring tension with a blenometer.

Parameter

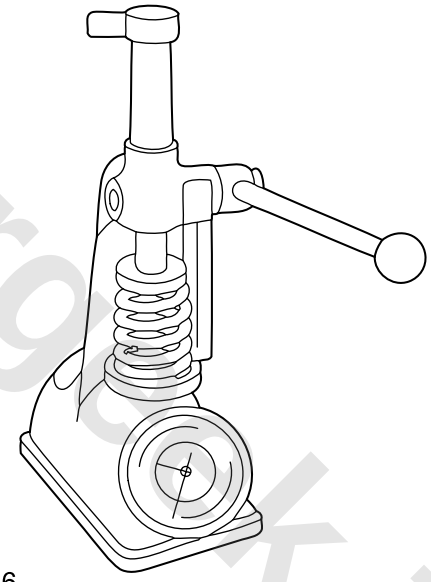

S1113266

5. If the load of valve spring is low,replace the valve spring.Do not increase the spring load with spacer.If using the spacer,compress the valve spring to the extreme before the cam of camshaft reaches the top of lift.

Valve Rocker Arm Cleaning and Check

1. Check the camshaft follower roller (1) for the followings:

- Flat spots
- Excessive scratch and spot corrosion
- Make sure the roller can freely rotate

2. Inspect the connection part (2) at valve stem end of camshaft follower.
3. Inspect the stationary hydraulic lash adjuster (SHLA) pivot part of the camshaft follower (3).

www.cargeek.ir

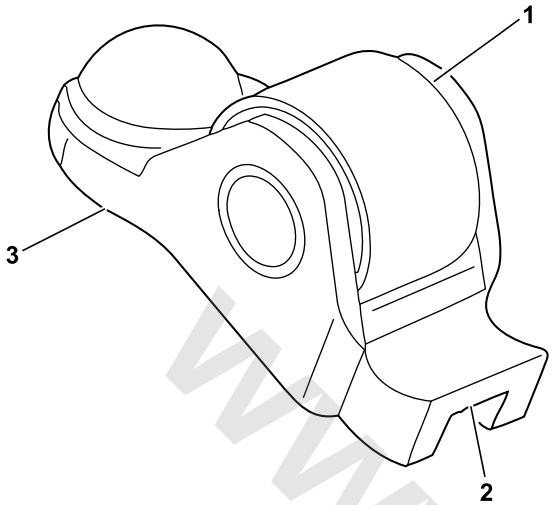

S1113267

4. Replace the camshaft follower when necessary.

Cylinder Head/Gasket Surface Cleaning and Check

1. Check the cylinder head gasket and mating face for leakage,corrosion or blow-by.If the gasket is failed, identify reasons based on following failures:
   a. Incorrect installation
   b. Cylinder head loose or warped
   c. Locating pin lost, not in original place or not fully located
   d. Sealing area around coolant passage corroded
   e. Chip or debris found in cylinder head bolt hole
   f. Cylinder block bolt hole not drilled or tapped to a sufficient depth
   g. Check the oil supply check valve
2. Check the fuel injector hole, if necessary, clean the fuel injector hole.

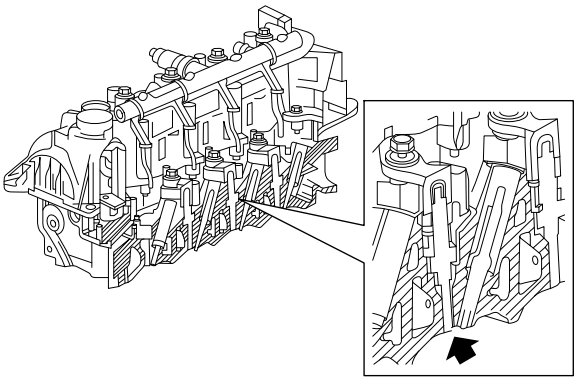

S1113727

3. Check the cylinder head gasket surface.
   - If the corrosion just occurs outside the area 4mm from each combustion chamber (1), the cylinder head can be reused.
   - If the area between the valve seats is cracked (2), replace the cylinder head.
   - If the corrosion occurs inside the area 4mm from each combustion chamber (3), replace the cylinder head.

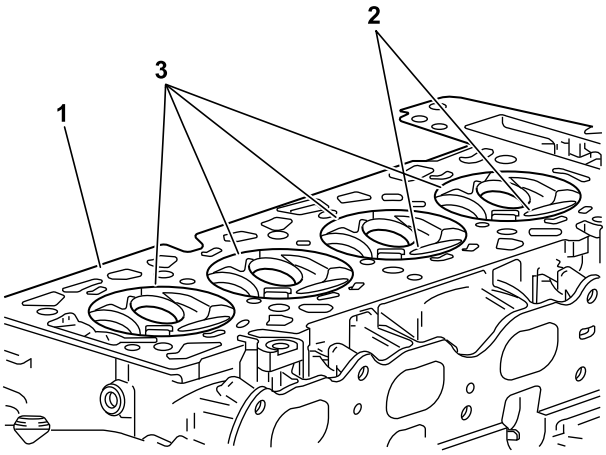

S1113269

4. Clean the cylinder head. Remove all varnish, ash and carbon deposit on the exposed metal surface.

Tip: DO NOT use a wire brush on any gasket sealing surface.

5. Clean the valve guide pipe.
6. Clean the bolt hole with a nylon mane brush.
7. Remove the sealant residue in the plug hole.
8. Check the cylinder head for thread damage or cylinder head stretched or damaged.
9. Replace all suspected bolts.
10. Clean all the surfaces of the cylinder head with non-corrosive solvent.
11. Blow-dry all the oil return holes with compressed air.
12. Remove all carbon deposits in the combustion chamber with a nylon bristle brush.
13. Clear all the debris and sediments on the tappet opening.
14. Check the cylinder head for crack. Check the area between the valve seats and inside the exhaust port.
15. Check the top surface of the cylinder head for corrosion, blister or blow-by hole.

Tip: DO NOT attempt to weld the cylinder head, replace it.

16. Check all thread holes for damage. Thread inserts can be used for thread repair.
17. Check the sealing surface.
18. Check the plug of cylinder head, and confirm that the

www.cargeek.ir

oil hole is clean and free from debris.

Cylinder Head Top Surface Cleaning and Check

1. Check whether the cylinder head top surface is flat. If the cylinder head exceeds the specification,replace the cylinder head.The cylinder head shall not be machined.

Parameter

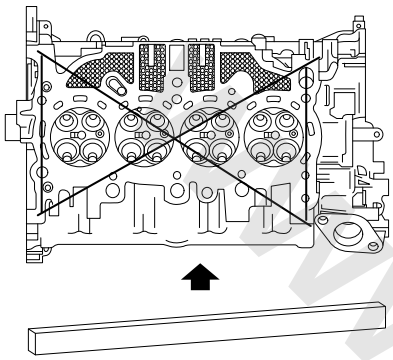

S1113728

2. Ensure that the cylinder head top surface is clean without gasket material.
3. Check the surface for any defect or scratch that may hinder correct sealing of cylinder head liner.
4. Place a ruler on the top surface of the cylinder head diagonally.
5. Use a clearance gauge to measure the clearance between the ruler and the top surface of the cylinder head at 4 points along the ruler.

- If the distortion is less than 0.05mm, it is unnecessary to repair the top surface of cylinder head.
- If the distortion is between 0.05 and 0.20mm, or there is any defect or scratch that may hinder the correct sealing of cylinder head liner,repair the top surface of cylinder head.The maximum removal amount is 0.25mm.
- If the top surface of the cylinder head needs to grind more than 0.25mm,replace the cylinder head.

Camshaft Check

1. Clean the camshaft with solvent.
2. Check the camshaft oil supply hole (1) to camshaft position actuator for dust, debris or clogging.
3. Check threaded hole (2) for damage.
4. Check the camshaft position actuator locating notch (3) for any damage or wear.
5. Check the camshaft seal groove (4) for damage.
6. Check the camshaft thrust surface (5) for damage.
7. Check the cam lobe (6) and journal (7) for followings:

- Too many scratches or pitting
- Discoloration due to overheating
- Deformation due to excessive wear (especially the camshaft lobe)

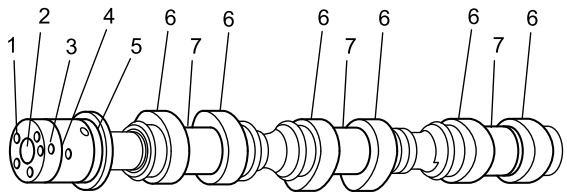

S1113729

If the camshaft has any of abovementioned conditions, replace the camshaft.

Camshaft Measurement

1. Place the camshaft on a suitable fixing support to measure the camshaft for wear.

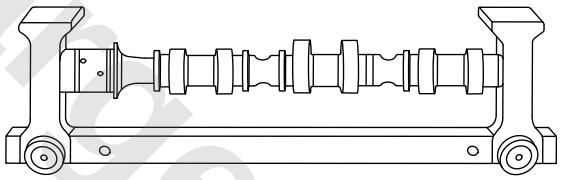

S1113731

2. Measure the diameter and out-of-roundness of the camshaft journal with an OD micrometer.

Parameter

- If the diameter is smaller than the specified value,replace the camshaft.
- If the out-of-roundness exceeds the specified value,replace the camshaft.

3. Measure the camshaft runout with a runout measuring instrument.

Parameter

www.cargeek.ir

www.cargeek.ir

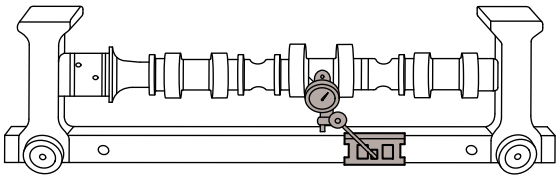

S1113732

4. Measure the crankshaft thrust width for wear with a depth micrometer.

Parameter

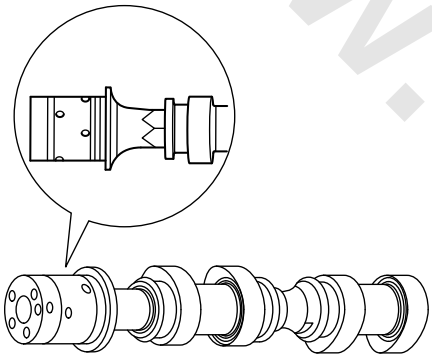

S1113733

5. Measure the surface of camshaft thrust wall for runout with a runout measuring instrument.

Parameter

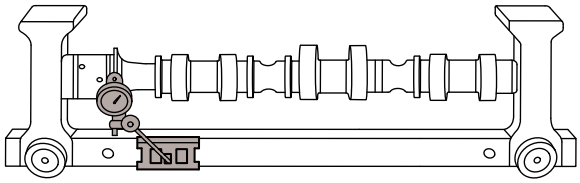

S1113734

6. If the camshaft damage or wear degree exceeds the specified value,replace the camshaft.Machining operation on the camshaft is not allowed.
7. Measure the camshaft chamfer for wear with a runout measuring instrument.

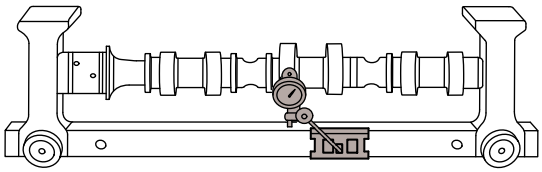

S1113735

Camshaft Journal Clearance

1. Fit the camshaft bearing cover to the cylinder head without camshaft.
2. Fit camshaft cover bolts and tighten to**14-16Nm**.
3. Measure the camshaft bearing bore diameter with the inner diameter micrometer.
4. Substract the camshaft bearing bore diameter from the camshaft bearing journal to obtain the running clearance.

If the running clearance exceeds the specified value and the camshaft journal is within the specified range,replace the cylinder head.

Parameter

5. After the measurement, remove the camshaft bearing cover.

Camshaft Journal Positioning

1. Ensure that the camshaft is maintainable.
2. Check the cylinder head camshaft bearing surface for any defects or scratches that may hinder the correct fit clearance of camshaft.Repair minor defects or scratches.
3. Fit the camshaft to the cylinder head.
4. Fit the camshaft bearing cover.
5. Fit camshaft cover bolts and tighten to**14-16Nm**.
6. Ensure that the camshaft can rotate freely in the cylinder head.If the camshaft can not rotate freely,replace the cylinder head.

www.cargeek.ir

www.cargeek.ir

Valve Mechanism Check

Overview of Valve Measurement and Finishing

- The proper service on valve is crucial to engine performance.Therefore,all measurement procedures must be followed to distinguish the parts exceeding the specifications.
- If the measurement procedures indicate that the valve or valve seat must be finished,it is essential to perform measurement procedures after the finishing.

Valve Seat Width Measurement

1. Measure the width of the valve seat in the cylinder head with a suitable gauge.

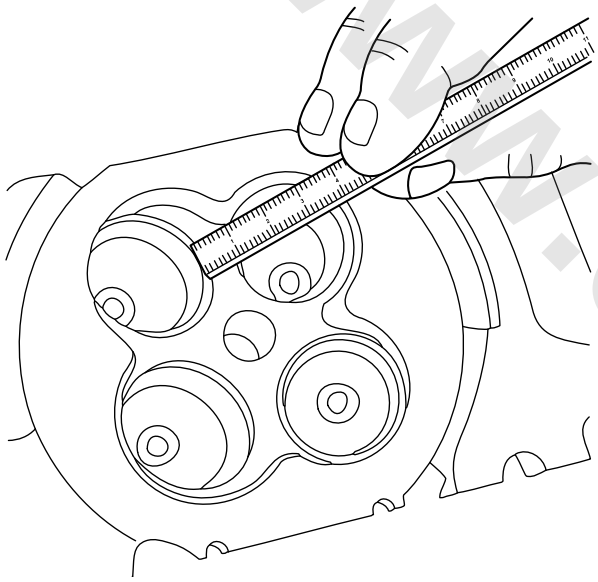

S1113272

2. Measure the length of the valve with a vernier scale.

Parameter

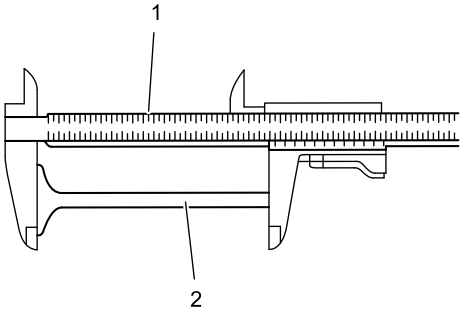

S1113737

3. Measure the valve stem diameter with a micrometer.

Parameter

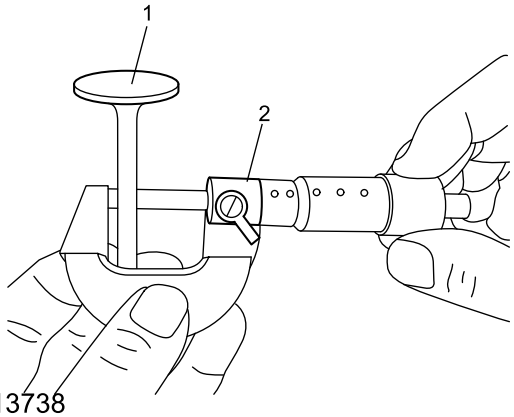

S1113738

4. Measure the width of the valve cone on the valve cone (1) with a suitable gauge.

Tip: *The distance from valve seat contact surface to valve outer diameter - allowance(a) shall be at least 0.5mm.If the valve seat contact surface is too close to the valve allowance,trim the valve seat to keep the valve seat contact surface away from the allowance.*

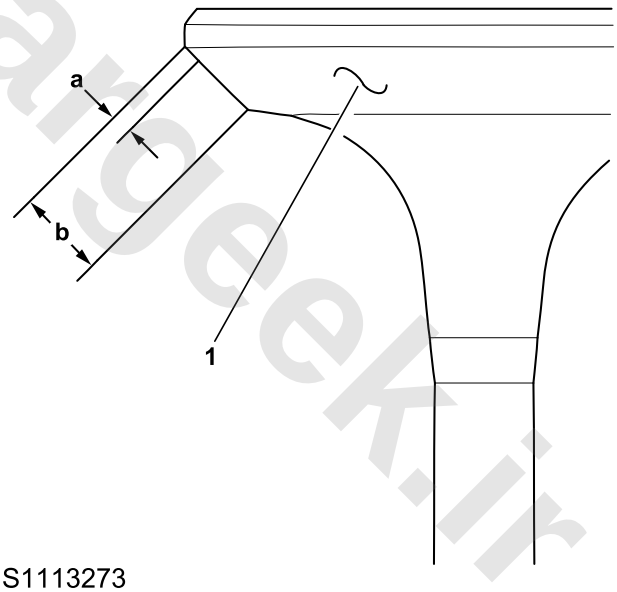

S1113273

5. Compare the measured value with the specified value.

Parameter

6. If the valve seat width meets the requirements,inspect the valve seat roundness according to the measurement procedure of valve seat roundness.
7. If the valve seat width does not meet the requirements,grind the valve seat according to valve and valve seat finishing procedure,to make its width meet the specification requirement.Whether the valve can meet the required heat dissipation depends on the width of valve seat.

Valve Seat Roundness Measurement

1. Fit the tapered guide bar to the conduit,connect the

www.cargeek.ir

micrometer to the guide bar and measure the valve seat roundness with the micrometer.The guide bar shall be slightly clamped when fitted to the conduit.

Caution: Use the guide lever with correct dimension only.Never use guide lever with adjustable diameter.The guide lever with adjustable diameter may damage the valve tube.

2. Compare the measured value with the specified value.

Parameter

3. If the roundness of the valve seat is out of the specification,grind the valve and the valve seat according to the relevant finishing procedures.
4. If a new valve is used,the valve seat roundness must be within 0.05mm.

Valve Head OD and Chamfer Measurement

1. Measure valve head outer diameter and chamfer(a) with a proper scale.

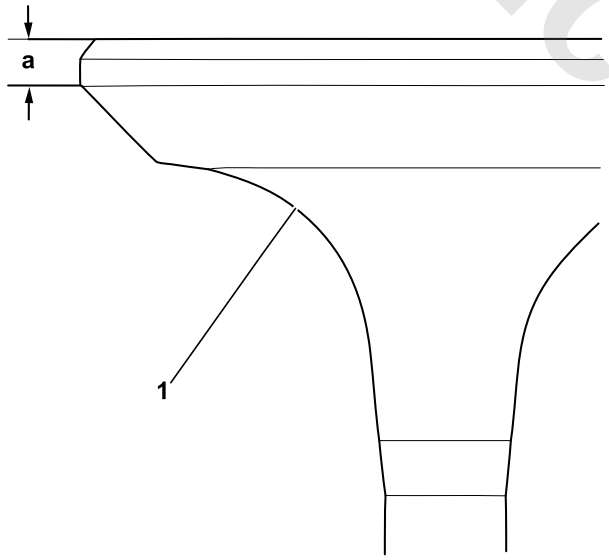

S1113274

2. Compare the measured value with the specified value.

Parameter

3. If the outer diameter and chamfer of the valve head are within the specified range,test the valve seat concentricity of valve(1) according to the "Measurement Procedures for Valve to Valve Seat Concentricity".After the concentricity measurement,if valve seat is finished,recheck the outer diameter and chamfer of the valve head.

Valve to Valve Seat Concentricity Measurement

Caution:

- ***Check the coaxiality of the valve and valve seat to confirm the normal sealing of the valve and valve seat.***
- ***The valve conical surface and valve seat must be measured to ensure the normal sealing of the valve.***

1. Gently apply the blue colorant (1) to the valve cone(3).
2. Fit the valve into the cylinder head.
3. Apply sufficient pressure against the valve seat to drive the valve to rotate,which may remove the colorant.
4. Remove the valve from the cylinder head.
5. Check the valve cone.

- If the valve cone and valve stem are concentric and can provide proper seal,continuous trace will appear around the entire cone(2).

Caution: *The distance from impression ground off with dye to valve outer diameter-allowance(a)- must be at least 0.5mm.If the impression ground off with dye is too close to the allowance,the valve seat must be trimmed to keep the contact surface away from the allowance.*

Caution: Never grind or adjust the intake valve.If the intake valve exceeds the specification, replace it with correct intake valve.

- If the valve cone and valve stem are not concentric,discontinuous removal trace of the valve cone colorant will appear.Surface finishing or replacement shall be made for the valve,and finishing of the valve seat shall be done according to the finishing procedures for the valve and valve seat.

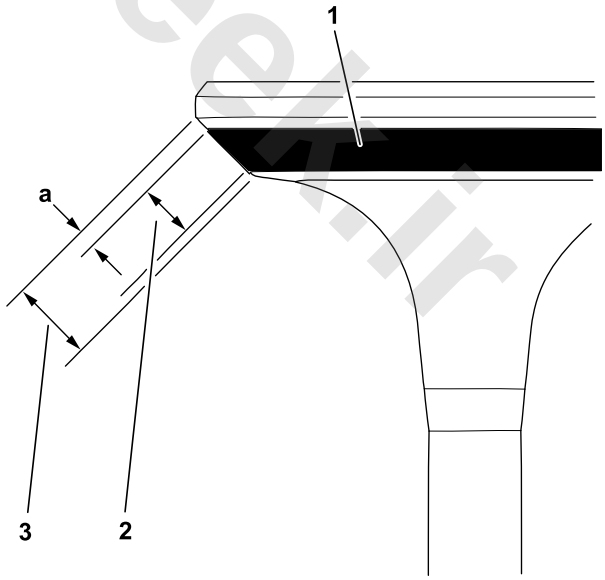

S1113275

Valve and Valve Seat Finishing

Caution:

- ***If the width, roundness or coaxiality of the valve seat exceed the specified value, grind the valve seat to ensure enough radiating heat to prevent the carbon deposit on the seat.***

www.cargeek.ir

www.cargeek.ir

- ***If the valve seat needs to be adjusted, the valve surface shall be adjusted unless new valve is used.***

1. Grind the valve seat surface (a) till it meets the specified value of valve taper angle (2).

Parameter

2. Grind the valve relieving face till it meets the specified value of valve taper angle (1),and enables the valve seat surface (a) to be correctly positioned on the valve.

Parameter

3. Grind the bottom section of the valve until it meets the specified value of valve taper angle (3), and reduce the width (a) of the valve seat so that it meets the specified value.

Parameter

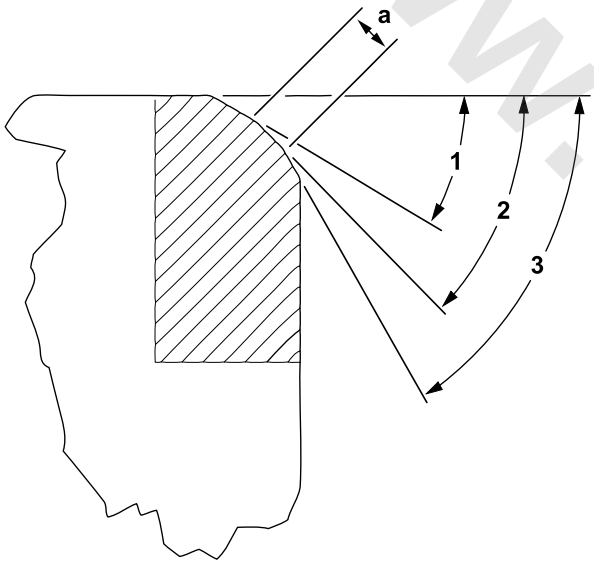

S1113276

4. If it is out of the specification,replace the intake valve.

Caution: Never grind or adjust the intake valve.If the intake valve exceeds the specification, replace it with correct intake valve.

5. If the exhaust valve being used is the original one,grind the valve to reach the specified value.After the grinding,measure the valve head outer diameter and chamfer again according to the relevant measurement procedures.If it is out of the specification,replace the exhaust valve.New valves do not require grinding.

Parameter

6. When grinding the valve and valve seat,remove as few materials as possible.Grinding valve seat may lead to drop of the valve spring pressure.
7. Fit the valve into the cylinder head.

- If an exhaust valve with finished surface is used,grind the valve into the valve seat with fine abrasives.Valve and valve seat finishing shall ensure smooth surface and proper assembly,so it is only required to do basic grinding work.Excessive grinding will leave groove on the valve cone and make it impossible to locate properly under high temperature.
- Before final assembly,remove all the abrasive residues on the valve and valve seat with solvent and compressed air,and ensure the valve and valve seat are clean.

8. After the valve seat in cylinder head reaches the correct width,it is necessary to measure the height of valve stem again according to the valve stem height measurement procedures.
9. If the height of valve stem is qualified,test the concentricity of valve seat according to the measurement procedure of valve to valve seat concentricity.

Valve Stem Height Measurement Procedures

Caution: Measure the distance between the valve spring seat and the valve spring seat to confirm the height of the valve lever.

1. Insert the valve (1) into the valve guide pipe of the cylinder head(2).

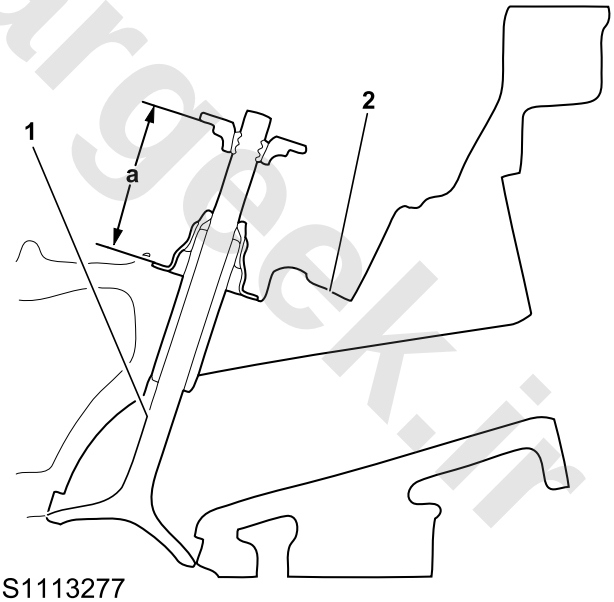

S1113277

2. Ensure the valve is secured properly on the valve seat of the cylinder head.
3. Fit the valve stem oil seal.
4. Fit the valve spring seat and valve stem lock plate.
5. Measure the distance (a) from the valve seal lip to the bottom of the spring seat.

Parameter

6. If the height of the valve stem is above the maximum value,fit a new valve and remeasure the height of the valve stem.

www.cargeek.ir

www.cargeek.ir

Caution: Never grind the end of the valve lever.The end of the valve lever is hardened. The hardened surface will be eliminated by grinding, then causing early wearing and damage to the engine.

7. If the height of the valve stem remains above the maximum value,the cylinder head must be replaced.

Caution: Never use the gasket to adjust the height of the valve lever.If gasket is used to compress the valve spring to the bottom before the cam salient reaches the max lift, the engine may be damaged.

Piston Connecting Rod Check

Piston Check

1. Clean the piston skirt and piston pin with cleaning agent, do not clean any part of the piston with the wire brush.
2. Clean the piston ring groove with ring groove cleaning tool, ensure that the oil ring hole and groove are clean.
3. Dry the piston with compressed air.

Warning: Wear the goggles when using the compressed air to avoid the damage to the eyes due to splashing dust and particles.

4. Inspect the piston for the followings:

- Check the piston ring groove, piston skirt and piston pin boss for cracks
- There are notches and burrs which may cause obstruction in the piston ring groove
- Check the piston ring groove for bending or wear
- Check the piston pin retainer groove for burrs
- Piston top is corroded.
- Check the piston skirt coating for wear or damage
- Check the piston pin bore or piston pin for wear

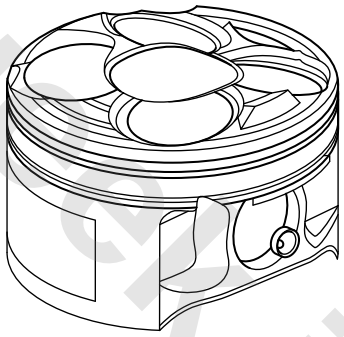

S1113739

5. Replace pistons with any damage or excessive abrasion.

Piston Measurement

1. Measure the piston width according to the following procedures:
   a. Measure the width of the piston (1) at a point 38mm below the top of the piston with an outside micrometer (2) at the thrust surface perpendicular to the piston pin centerline.
   b. Deduct the piston width from the cylinder diameter to obtain the fit clearance, and compare the results with the specified values of piston width and fit clearance.
   c. If the measured clearance is greater than the specified valve as provided and the cylinder diameter is within the specified range, replace the piston.

www.cargeek.ir

www.cargeek.ir

Parameter

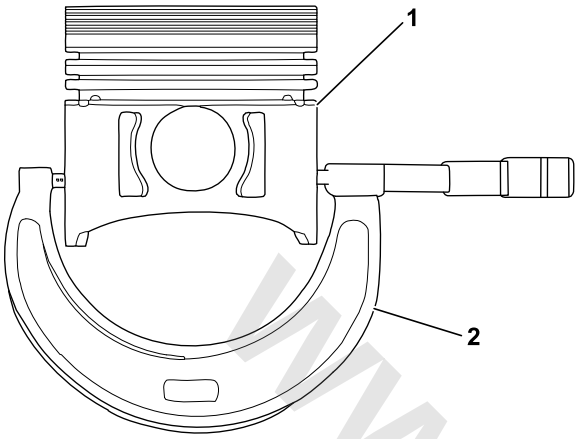

S1113245

2. Measure the clearance from piston pin hole to piston pin according to the following procedures:
   a. Piston pin hole and piston pin must be free of any varnish or wear.
   b. Measure the piston pin within the position coming into contact with the piston with an outer diameter micrometer.
   c. Measure the piston pin hole with an inner diameter micrometer.
   d. Subtract the piston pin diameter from the piston pin bore diameter to obtain the clearance between the piston pin bore and piston pin.

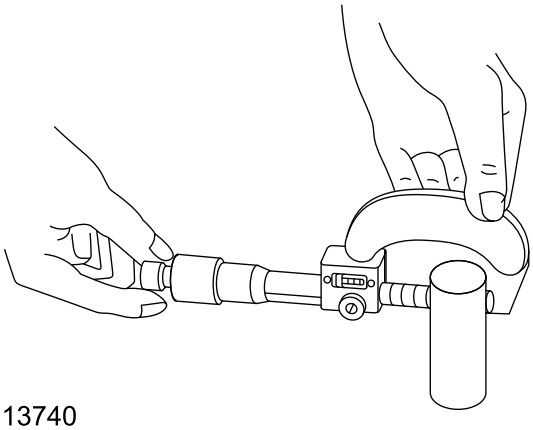

S1113740

3. Compare the results with the specified values of piston pin diameter and clearance between piston pin and piston pin bore.

Parameter

4. If the clearance is too large, identify the component beyond the specification and replace it as needed.
5. If any dimension of the piston exceeds the specification, the piston must be replaced.
6. If the new piston fails to meet the clearance specification, the dimension of cylinder block may need to be increased by 0.25mm. Only one piston and piston ring with increased size are available for service.

Piston Ring Measurement

1. Measure the piston ring end clearance according to the following procedures:
   a. Position the piston ring in the cylinder bore, about 25mm from the top of the cylinder block. Locate the piston ring with the piston head, and ensure the piston ring is perpendicular to the cylinder bore.
   b. Measure the piston ring end clearance with a feeler gauge (1). Compare the measured value with the specified value.

Parameter

   c. If the clearance is greater than the provided specification, the piston ring must be replaced.
   d. Repeat this procedure to all piston rings.

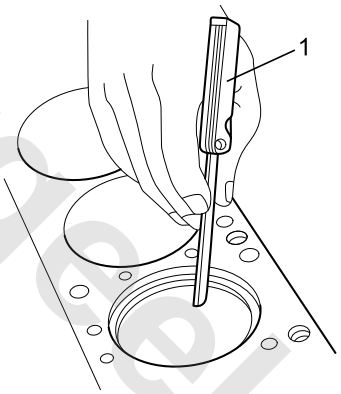

S1113119

2. Measure the piston ring side clearance according to the following procedures:
   a. Rotate the entire piston ring (2) around the piston ring groove. If the blockage is caused by a distorted piston ring, replace the piston ring.
   b. Position the piston ring on the piston, measure the clearance from more than one locations with a feeler gauge (1).
   c. Compare the measured value with the specified value of piston ring side clearance.

Parameter

   d. If the clearance is greater than the specified value, replace the piston ring.

www.cargeek.ir

www.cargeek.ir

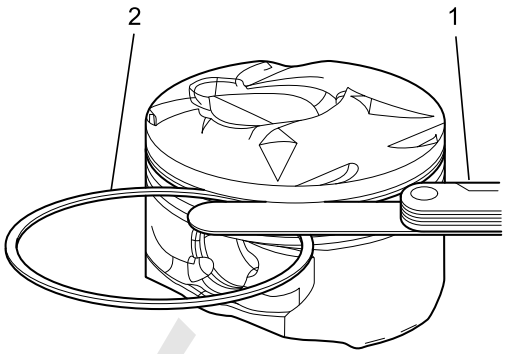

S1113120

3. For compression ring refit, there's a locating notch near the end, which is used to identify the top surface, make the notch upward.
4. If the new piston ring is unable to reduce the clearance to a proper specified value, fit a new piston.
5. If the new piston fails to meet the clearance specification, the dimension of cylinder block may need to be increased by 0.25mm. Only one piston and piston ring with increased size are available for service.

Connecting Rod Check

1. Clean the connecting rod with solvent and dry it with compressed air.

Warning: Wear the goggles when using the compressed air to avoid the damage to the eyes due to splashing dust and particles.

2. Remove the cap of the connecting rod and clean the threads (3).
3. Remove and discard the connecting rod bearing, do not reuse the connecting rod bearing used during engine running.
4. Check the piston pin bushing (4) for scratch or damage.
5. Check the beam (1) of connecting rod for bend or deformation.
6. Check the connecting rod cap (2) for any notch or damage caused by any potential factors.

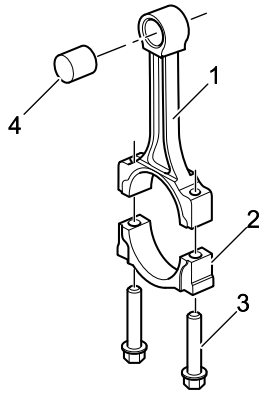

S1113741

7. Check the surface of the connecting rod bearing seat for scratch or wear.
8. If slight scratch or wear occurs in the connecting rod hole, clean the connecting rod hole in circle direction with a fine sandpaper.

Caution: *Do not scratch the connecting rod or connecting rod cap.*

Connecting Rod Measurement

1. When measuring the clearance between the piston pin and the connecting rod hole, follow the following procedures:

Caution: *All the components shall be measured at normal temperature.*

a. 2 measurements of the piston pin diameter shall be performed with an OD micrometer from the location where the piston pin comes into contact with the connecting rod.

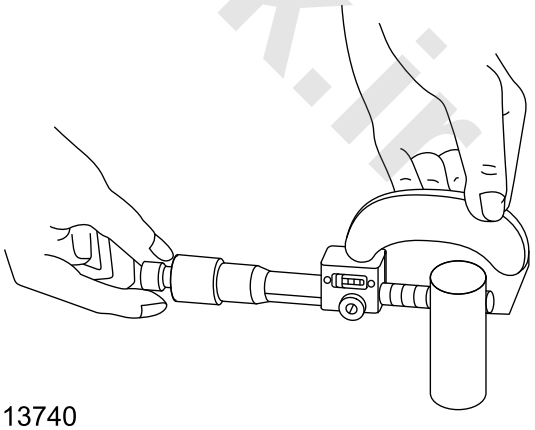

S1113740

b. Measure the connecting rod piston pin hole diameter with an inner diameter micrometer.

www.cargeek.ir

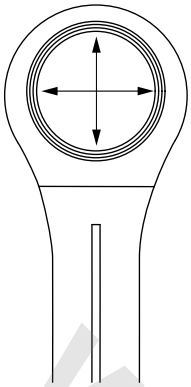

S1113742

c. Subtract the piston pin diameter from the connecting rod piston pin bore diameter to obtain the clearance between the pin bore and connecting rod bore.

2. Compare the measured value of clearance with the specified value.

Parameter

3. If the clearance is too large, replace the piston pin.
4. If the clearance is still too large, replace the connecting rod.
5. Measure the inner diameter of connecting rod crankshaft bearing hole with an inner diameter micrometer.
6. Compare the measured value of bearing hole diameter with the specified value.

Parameter

7. If the bearing hole is beyond the specification, replace the connecting rod, and do not finish the connecting rod.

Cylinder Block Check

Cylinder Block Check

1. Remove all the old thread sealant, lining material or sealant.
2. Clean all the following areas with solvent:

- Sealing surface
- Cooling channel
- Oil gallery
- Bearing journal

3. Clean all the thread holes and through holes with solvent.
4. Dry the engine cylinder block with compressed air.

Warning: Wear the goggles when using the compressed air to avoid the damage to the eyes due to splashing dust and particles.

5. Inspect the crankshaft bearing journal for damage or eccentricity.Crankshaft bearing journal can not be repaired.If the crankshaft bearing journal is damaged,the cylinder block assembly must be replaced.
6. Check the primary camshaft drive chain tensioner mounting surface of the engine cylinder block for burrs or any defect that may reduce the sealing performance of the new primary camshaft drive chain tensioner gasket.
7. Check all sealing and meshing surfaces for damage,and repair or replace the cylinder block assembly as required.
8. Check all threaded holes and through-holes for damage or excessive debris.
9. Check all bolts for damage.if damaged,replace the bolts with new ones.
10. Check the cylinder wall for crack or damage, and the cylinder liner cannot be repaired.If the cylinder liner is damaged,the cylinder block assembly must be replaced.
11. Check the engine cylinder block for cracks,and do not repair any crack.If any crack is found,the cylinder block assembly must be replaced.

Cylinder Diameter Measurement

1. Measure the dimension of the location 37mm below the cylinder head gasket surface,and measure the cylinder diameter.

www.cargeek.ir

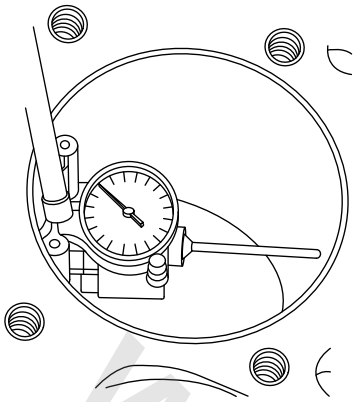

S1113743

2. Put the dial to zero at the spot to be tested of the cylinder by setting a bore diameter gauge(1),and measure the cylinder bore diameter.Before removing the cylinder bore diameter gauge from the cylinder,lock the dial at zero position.Set the zero position of cylinder bore diameter gauge to the same position when it is removed from the cylinder,and measure the span of the cylinder bore gauge contact point with an external micrometer.

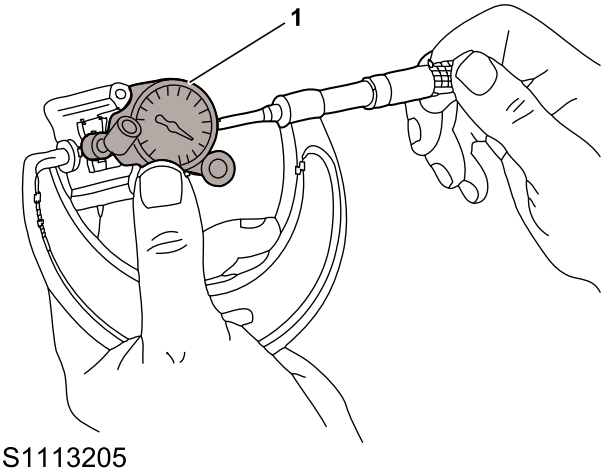

S1113205

3. The tiny vertical scratches caused by ring end will not result in excessive oil consumption itself.Do not grind the cylinder to eliminate such scratches.
4. Compare the measurements with the specified value.

Parameter

5. If the cylinder diameter is out of specification,the cylinder block can be enlarged by 0.25mm.Only one piston and piston ring with large size are available for service.

Cylinder Hole Taper Measurement

1. Measure the cylinder hole diameter along the thrust surface which is perpendicular to the crankshaft center line 10mm below the cylinder block top surface, and record measured value(1).
2. Measure the cylinder hole diameter along the thrust surface which is perpendicular to the crankshaft center line 100mm below the cylinder block top surface,and record measured value(2).

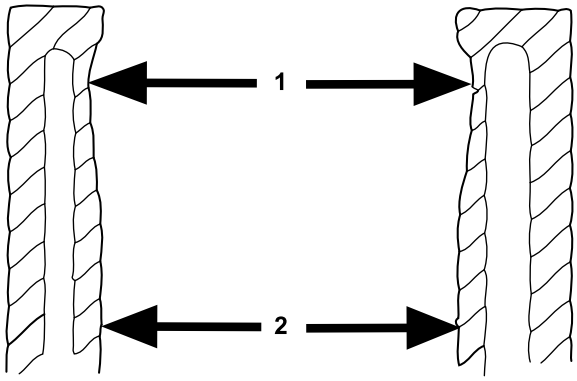

S1113204

3. Calculate the difference between 2 measured values,which is the taper of the cylinder block.
4. Compare the measured value with the specified value.

Parameter

5. If the cylinder is out of specification,the cylinder block can be enlarged by 0.25mm.Only one piston and piston ring with large size are available for service.

Cylinder Hole Out-of-roundness Measurement

1. Measure both thrust and non-thrust cylinder diameters from a point 10mm below the top, and record the measured values.
2. Calculate the difference between 2 measured values,which indicates the out-of-roundness of the upper end of the cylinder.
3. Measure both thrust and non-thrust cylinder diameters from a point 100mm below the top,and record the measured values.
4. Calculate the difference between 2 measured values,which indicates the out-of-roundness of the lower end of the cylinder.

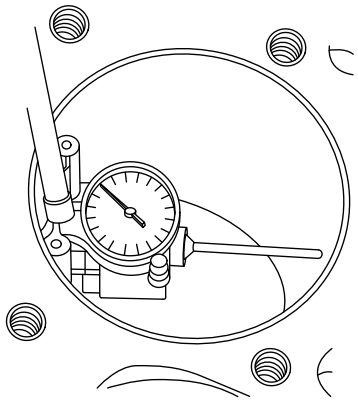

S1113743

www.cargeek.ir

www.cargeek.ir

5. Compare the measured values with the specified value.

Parameter

6. If the cylinder is out of specification,the cylinder block can be enlarged by 0.25mm. Only one piston and piston ring with large size are available for service.

Top Surface Flatness Check

1. Make sure the engine cylinder block top surface is clean without gasket material.
2. Check the surface for any defect or scratch that may hinder correct sealing of cylinder head liner.
3. Place a ruler on the top surface of the cylinder block diagonally.
4. Use a clearance gauge to measure the clearance between the ruler and the top surface of the cylinder head at 4 points along the ruler.

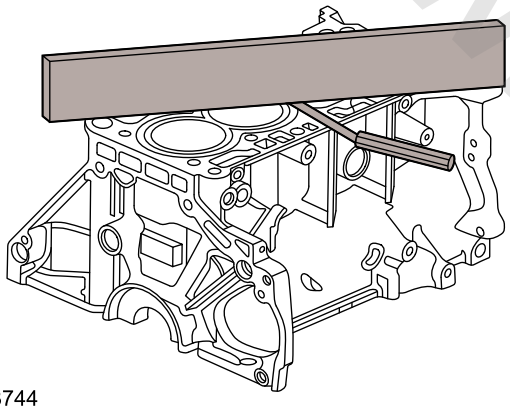

S1113744

5. If the distortion is less than 0.05mm,the top surface of cylinder block does not need to be reconditioned.
6. If the distortion is between 0.05 and 0.20mm,or there are any defect or scratch that may hinder the correct sealing of cylinder head liner,the top surface of cylinder block needs to be reconditioned.
7. If the top of the cylinder block needs to be reconditioned,the maximum removable amount is 0.25mm.
8. If the removable amount on cylinder block top surface is larger than 0.25mm,the cylinder block must be replaced.

Crankshaft Check

Crankshaft check

Tip: Use care when handling the crankshaft.Avoid damage to the bearing surfaces or the lobes of the crankshaft position reluctor ring.Damage to the teeth of the crankshaft position reluctor ring may affect on-board diagnostic (OBD) II system performance.

1. Clean the crankshaft with solvent.
2. Thoroughly clean all oil ducts and check for blockage or burr.
3. Dry the crankshaft with compressed air.

Warning: Wear the goggles when using the compressed air to avoid the damage to the eyes due to splashing dust and particles.

4. Visually check the crankshaft for damage.

Tip: Reluctor ring teeth should not have imperfections on the rising or falling edges.Imperfections of the reluctor ring teeth may effect OBD II system performance.

5. Check the crankshaft journal for pitting or embedded bearing material (1).
6. Check the crankshaft main journal for groove or scratch (2).
7. Check the connecting rod journal for scratch or wear (3).
8. Check the crankshaft journal for wear. The journal shall be smooth and free of scratch, wear or damage (4).

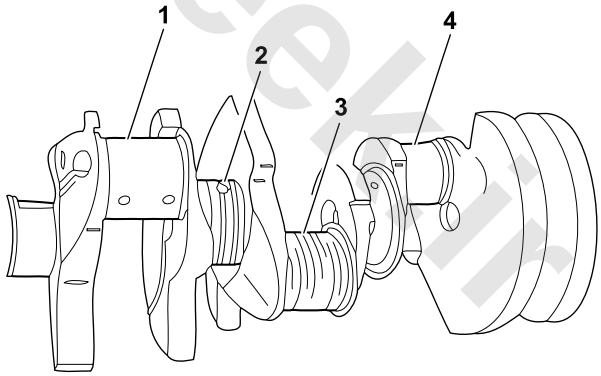

S1113234

Crankshaft Measurement

1. Measure the out-of-roundness of the crankshaft journal.

www.cargeek.ir

www.cargeek.ir

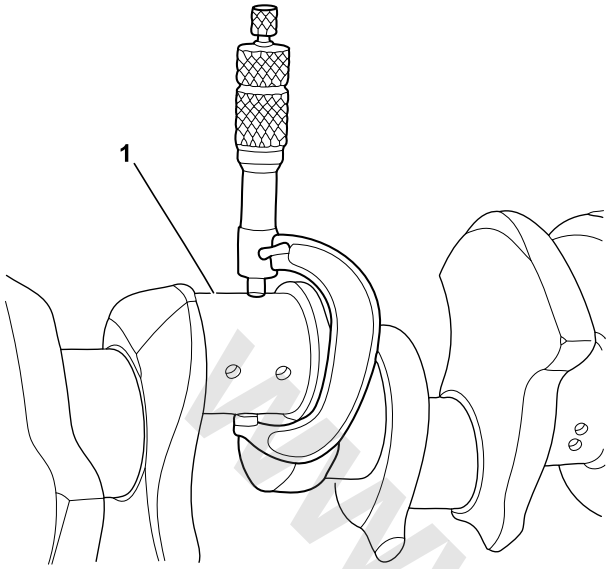

S1113235

2. Measure the crankshaft runout.
   a. Use a wooden V-shaped block, and support the crankshaft on the front and rear journals.
   b. This operation may use an indicator (1) or equivalent shown in figure to measure the runout of the front, rear intermediate crankshaft journals.
   c. Measure the rear flange runout of the crankshaft with an indicator (1).

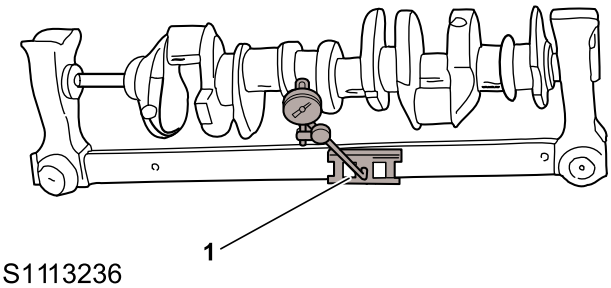

S1113236

3. If the measured value is not within the specified range, replace the crankshaft.

Parameter

Crankshaft Bearing Check

Tip: If crankshaft bearing failure is due to other than normal wear, investigate the cause.Inspect the crankshaft or connecting rod bearing bores.

1. Check the crankshaft bearing for pits or grooves (1), and the worn position shown in the bearing shell also represents the sign of fatigue wear.
2. Check the crankshaft bearing for severe scratch or discoloration (2).
3. Check the crankshaft bearing for embedded dust or debris and other materials.
4. Check whether the crankshaft bearing is not properly seated as shown in the bright bearing section (3).

- If the lower part of the bearing is worn or damaged, both upper and lower parts shall be replaced.
- Generally, if the lower part can be used, then the upper part can also be used.

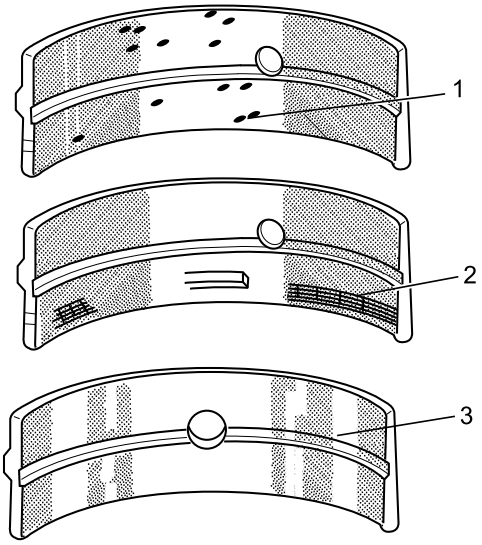

S1113237

Crankshaft Bearing Selection

Check the crankshaft main bearing bore as per following procedures.

- Tighten the main bearing bolt torque to the specified angle value with an angle gauge.
- Measure the taper and roundness in the crankshaft main bearing with a runout gauge (1).
- Taper or roundness is not allowed.

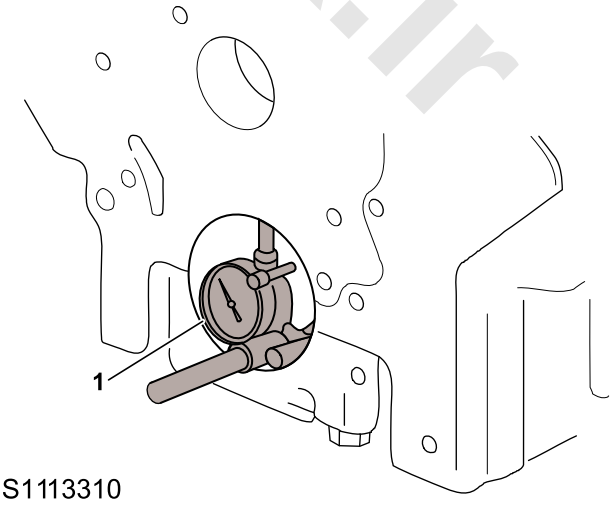

S1113310

Bearing Selection

Measure the bearing clearance so as to determine a correct size of the bearing to be replaced. There are 2 methods for

www.cargeek.ir

www.cargeek.ir

measuring the bearing clearance. Method A is able to provide more reliable results, so it is the preferred option.

- Bearing clearance can be calculated by measurements based on Method A.
- The bearing clearance is directly obtained by Method B, but no information on bearing runout will be given.

Method A

Tip: DO NOT mix inserts of different nominal size in the same bearing bore.

1. With an angle of 90°, measure the diameter of the crankshaft main journal from more than one point with a micrometer (1), and calculate the average of measured values.
2. Measure the taper and runout of the crankshaft main journal.
3. Fit the bearing and the lower crankcase, and tighten the bearing cap bolt to the specified torque value.
4. With an angle of 90°, measure the inner diameter (ID) of the bearing from several points and average the measured values.
5. Determine the clearance by deducting the measured journal value from the measured bearing inner diameter.
6. Compare the clearance value with the standard value to determine whether the clearance is within the prescribed scope.

   ☞ **Parameter**

7. If it is out of the specified range, select another bearing.
8. Measure the inner diameter of the connecting rod along the length of the connecting rod in the same direction with an ID micrometer.

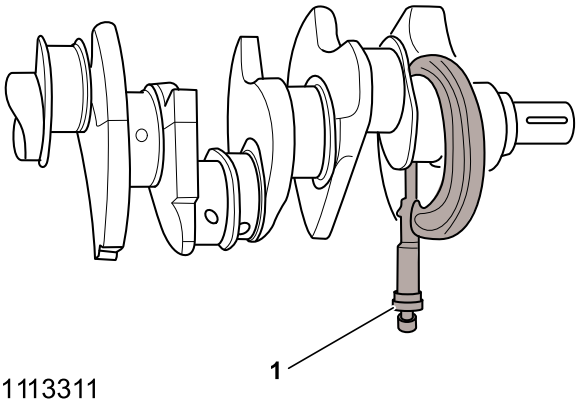

S1113311

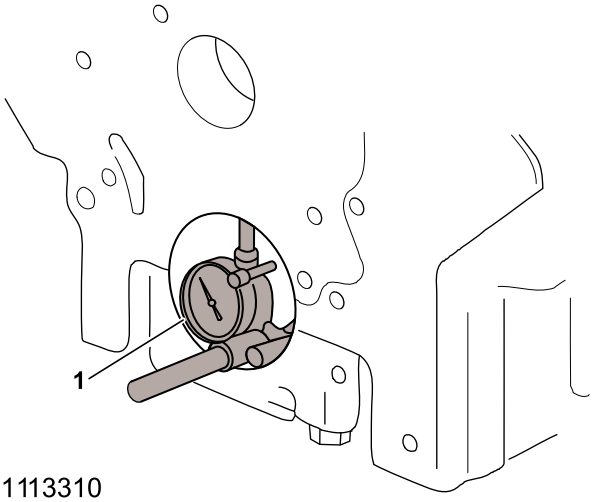

S1113310

Method B

1. Clean the used bearing.
2. Fit the used bearing.
3. Locate the plastic clearance gauge across the entire width of the bearing.
4. Fit the bearing cap.
5. Fit the bearing cap bolt to the specified value.

Caution: Before connecting the bolt, use copper, lead or leather hammers to knock the crankshaft bearing cover into the cylinder hole, avoiding the damage to the cylinder block or crankshaft bearing cover.Never use the connection bolt to pull the crankshaft bearing cover into the seat.Otherwise, the cylinder block or bearing cover may be damaged.

6. Remove the bearing cap to release the plastic clearance gauge from its original position. Whether the plastic of the gauge is stuck to the journal or bearing cap is not the key point.

   DO NOT rotate the crankshaft.

7. According to the scale mark (1) printed on the plastic clearance gauge component, measure the widest point of the plastic clearance gauge.
8. Remove the plastic clearance gauge.

www.cargeek.ir

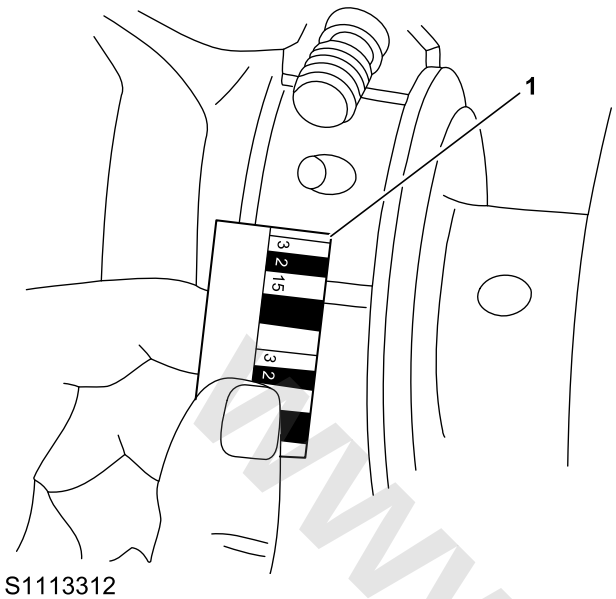

S1113312

Engine Oil Filter

Remove

1. Open the engine oil filler cap.
2. Lift the vehicle with a hoist.
3. Remove the bottom deflector.

☞ **Bottom Deflector Remove**

4. Place a suitable container under engine sump drain plug (1), remove and discard the sealing washer, and drain the oil.

Warning: Observe due care when draining engine oil as the oil can be very hot.

Warning: Avoid excessive skin contact with used engine oil. Used engine oil contains potentially harmful contaminants which may cause skin cancer or other serious skin disorders.

5. Clean the area around the filter head, and place a suitable container under the filter to collect the possible spillage.
6. Remove and discard engine oil filter (2).

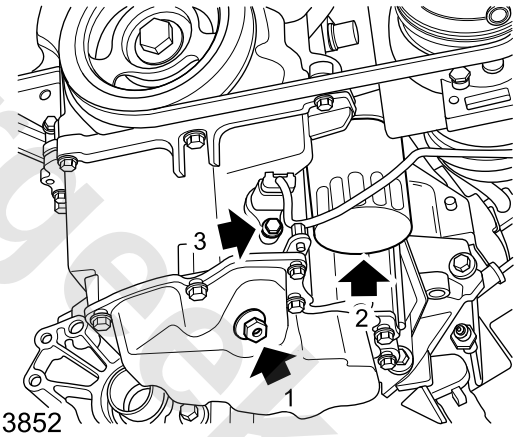

S1113852

Refit

1. Clean the mating surface of the filter head.
2. Lubricate oil filter O-ring with clean engine oil.
3. Fit a new filter and tighten to **26-34Nm**.
4. Clean the oil drain plug and fit a new seal washer.
5. Fit the oil drain plug and tighten to **21-29Nm**.
6. Fill new oil to the correct level from the engine oil filler.

☞ **Capacity**

☞ **Lubricating Fluid**

7. Fit the oil filler cap.
8. Fit the bottom deflector.

☞ **Bottom Deflector Refit**

9. Lower the vehicle.
10. Start and run the engine until the oil pressure warning lamp goes out.
11. Stop the engine, and check the engine oil level.

www.cargeek.ir

www.cargeek.ir

12. Check for any signs of leakage.

www.cargeek.ir

www.cargeek.ir

www.cargeek.ir

Special Tools

Tool Number	Description	Picture
TEN00080	Oil pressure gauge adapter	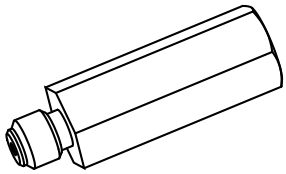 TEN00080
T10001	Engine oil pressure test equipment	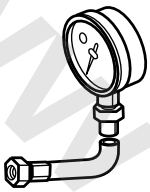 T10001
T10007	Engine lift bracket	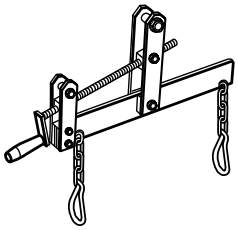 T10007
TEN00070	Engine support	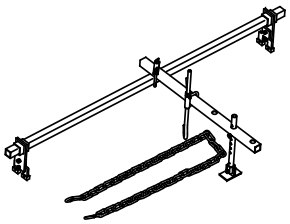 TEN00070
TEN00135	Crankshaft/balancer holding tool	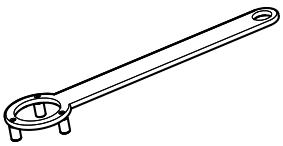 TEN00135

Tool Number	Description	Picture
TEN00144	Crankshaft seal transmission side guide bushing	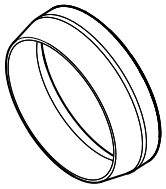 TEN00144
TEN00143	Crankshaft seal transmission side installer	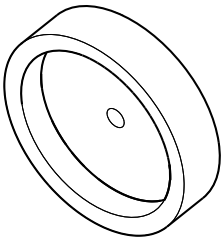 TEN00143
TEN00136	Crankshaft balancer 3-jaw puller	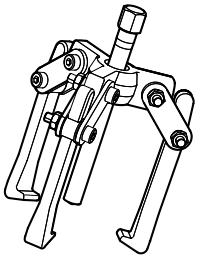 TEN00136
TEN00134	Camshaft locking tool	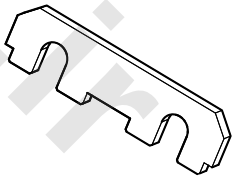 TEN00134

www.cargeek.ir

www.cargeek.ir

Tool Number	Description	Picture
TEN00141	Mechanical vacuum pump seal installer	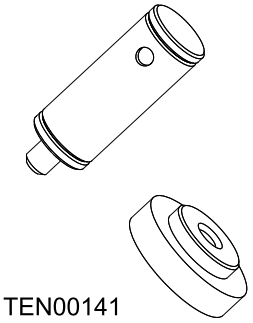 TEN00141
TEN00142	Crankshaft seal timing side installer	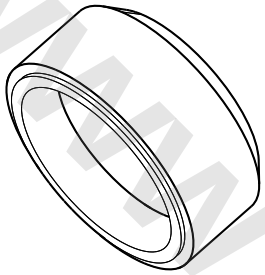 TEN00142

www.cargeek.ir

www.cargeek.ir

Engine Cooling System

Specifications

Torque

Description	Value
Bolt- expansion tank to body	4–6Nm
Screw-A	4.5-5Nm
Bolt-From front bumper impact bar to body in white	40–50Nm
Bolt-intercooler to platform	4–6Nm
Bolt- Wind scooper to body	3–5Nm
clamp- clamp to twin clutch sportronic transmission	7–10Nm
Bolt- oil cooling hose to AT	7–10Nm
Bolt-Thermostat to thermostat housing	9–11Nm
Bolt-Water pump to WAPU	13.5–16.5Nm
Bolt - water pump pulley to water pump	7.5-10.4Nm
Bolt - auxiliary pump bracket and CAC hose bracket to cylinder head	9–11Nm
Bolt- thermostat housing to water pump	8-12Nm
Bolt - water pump to cylinder block	22-28Nm
Bolt - bypass pipe to water pump	8-12Nm
Bolt - bypass pipe to cylinder head	8-12Nm

www.cargeek.ir

www.cargeek.ir

www.cargeek.ir

Parameters

2.0T Engine

Model	Temperature-controlled, pressure overflow backflow type cooling system with forced circulation of water and **OAT** mixture solution
Cooling Fan Coolant Capacity: Engine	9 Vanes, Temperature-Controlled Electric Axial Flow Type 8.2 L
Cooling Fan Switch ON: OFF: Cooling Fan Switch - After Engine Stop ON: Duration	 Coolant temperature ≥ 95°C or A/C ON request is received, refrigerant pressure ≥ 0.22MPa A/C OFF request is received, and coolant temperature <93°C ≥102°C <100°C, turn off immediately; e.g. after 327s, ≥100°C, turn off automatically.
Radiator	Crossflow Type
Coolant Pump	Clutch Water Pump, Radial Flow Impeller
Coolant Pump Drive Ratio	1.26
Thermostat	Electronic Thermostat, Wax-type Component
Thermostat Operating Temperature: •Initial Activation •Full Open •Full Open Lift	 103°C 115°C ≥ 8mm
Pressure-relief Valve of Expansion Tank Cap •High Pressure ON •Low Pressure ON	 140-160 KPa 0-10 KPa

www.cargeek.ir

www.cargeek.ir

1.5T Engine

Model	Temperature-controlled, pressure overflow backflow type cooling system with forced circulation of water and **OAT** mixture solution
Cooling Fan Coolant Capacity: Engine	9 Vanes, Temperature-Controlled Electric Axial Flow Type 7.1 L
Cooling Fan Switch ON: OFF: Cooling Fan Switch - After Engine Stop ON: Duration	 Coolant temperature ≥ 95°C or A/C ON request is received, refrigerant pressure ≥ 0.22MPa A/C OFF request is received, and coolant temperature <93°C ≥102°C <100°C, turn off immediately; e.g. after 327s, ≥100°C, turn off automatically.
Radiator	Crossflow Type
Coolant Pump	Mechanical, Radial Flow Impeller
Coolant Pump Drive Ratio	1 : 1
Thermostat	Electronic Thermostat, Wax-type Component
Thermostat Operating Temperature: •Initial Activation •Full Open •Full Open Lift	 97±2°C 112°C ≥ 8mm
Pressure-relief Valve of Expansion Tank Cap •High Pressure ON •Low Pressure ON	 140-160 KPa 0-10 KPa

www.cargeek.ir

Description and Operation

System Layout

Engine Cooling System - (2.0L Turbocharged Engine)

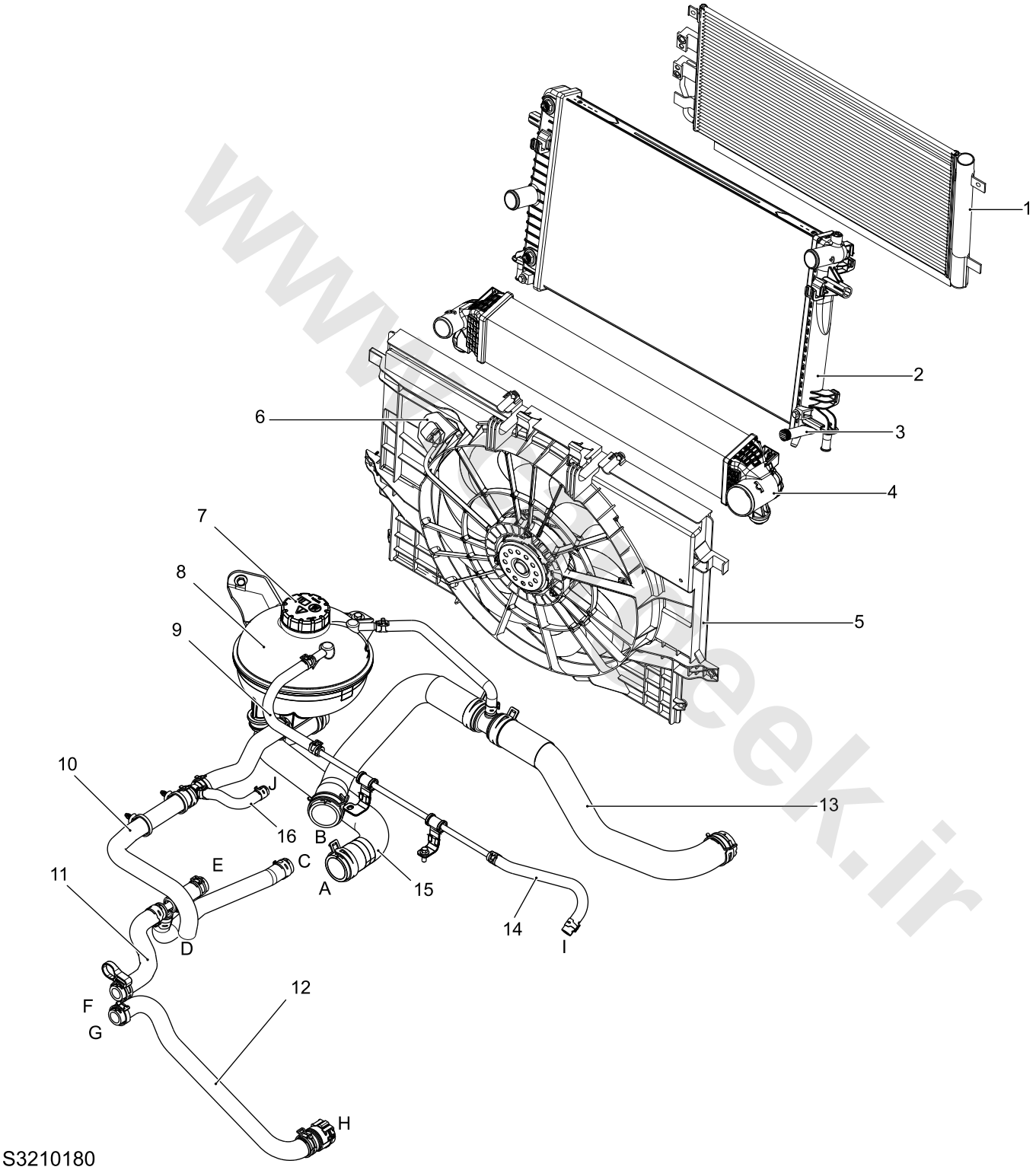

www.cargeek.ir

A = Radiator Outlet B = Radiator Inlet C = Engine Water Outlet D = Expansion Tank Water Outlet E = Electronic Water Pump Inlet F = Heater Core Inlet Pipe G = Heater Core Water Outlet H = Oil Filter Module Water Inlet I = Engine Vent J = Turbocharger Return Water Port

1. Condenser
2. Radiator
3. Radiator Drain Valve
4. Intercooler
5. Cooling Fan
6. Cooling Fan Speed Regulation Resistance
7. Expansion Tank Cap
8. Expansion Tank
9. Engine Overflow Pipe B
10. Expansion Tank Outlet Pipe
11. Heater Core Inlet Pipe
12. Heater Core Outlet Pipe
13. Radiator Inlet Pipe
14. Engine Overflow Pipe A
15. Radiator Outlet Pipe
16. Turbocharger Return Water Pipe

www.cargeek.ir

www.cargeek.ir

Engine Cooling System - (1.5L Turbocharged Engine)

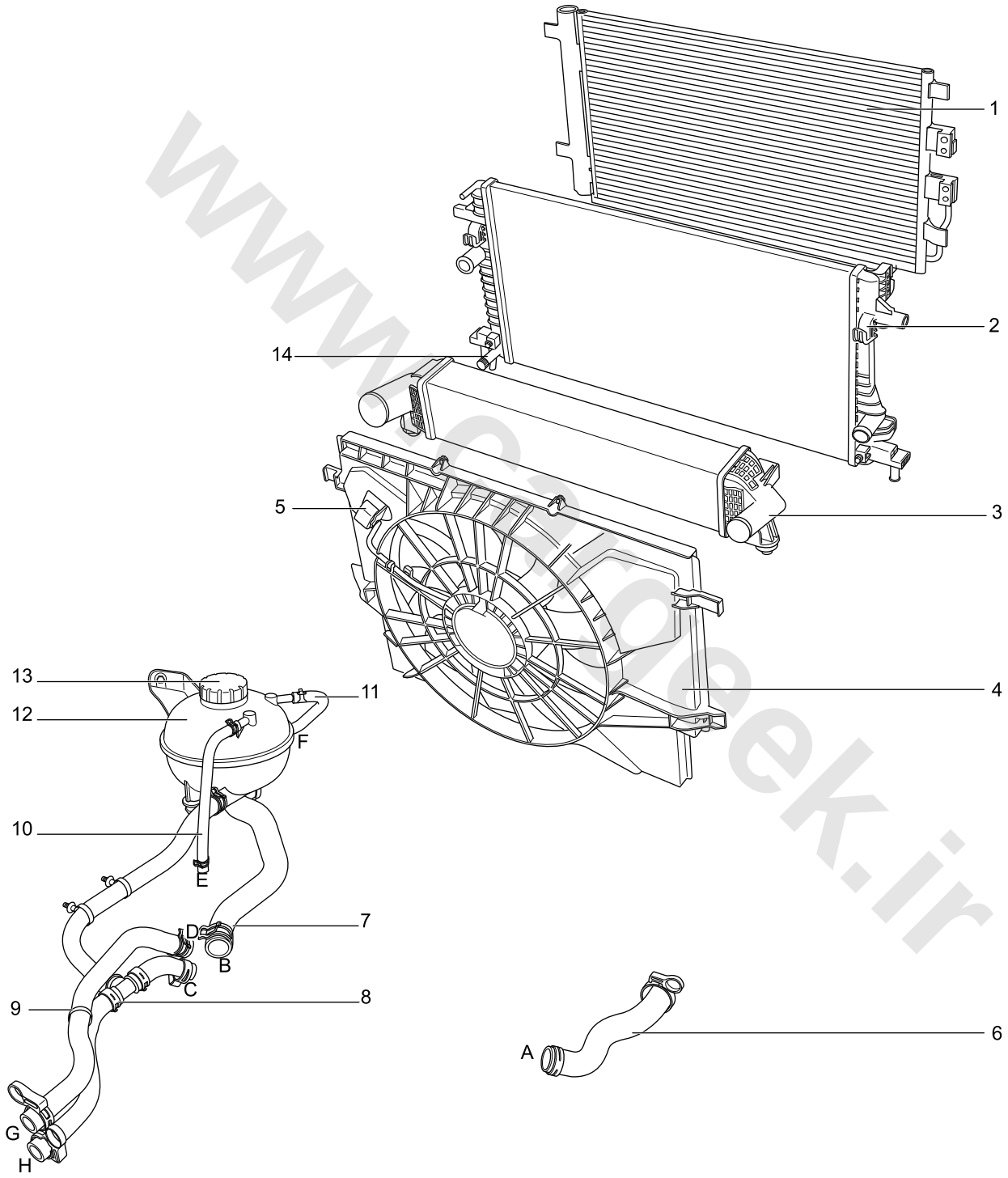

S3410221

A = Radiator Outlet B = Radiator Inlet C = Engine Water Inlet D = Engine Water Outlet E = Engine Overflow Port F = Radiator Overflow Port G = Heater Core Water Inlet H = Heater Core Water Outlet

1. Condenser
2. Radiator

www.cargeek.ir

www.cargeek.ir

3. Intercooler
4. Cooling Fan
5. Cooling Fan Speed Regulation Resistance
6. Radiator Outlet Pipe
7. Radiator Inlet Pipe
8. Heater Core Water Outlet Pipe
9. Heater Core Water Inlet Pipe
10. Engine Overflow Pipe
11. Radiator Overflow Pipe
12. Expansion Tank
13. Expansion Tank Cap
14. Radiator Drain Valve

www.cargeek.ir

www.cargeek.ir

Water Pump and Thermostat - (2.0L Turbocharged Engine)

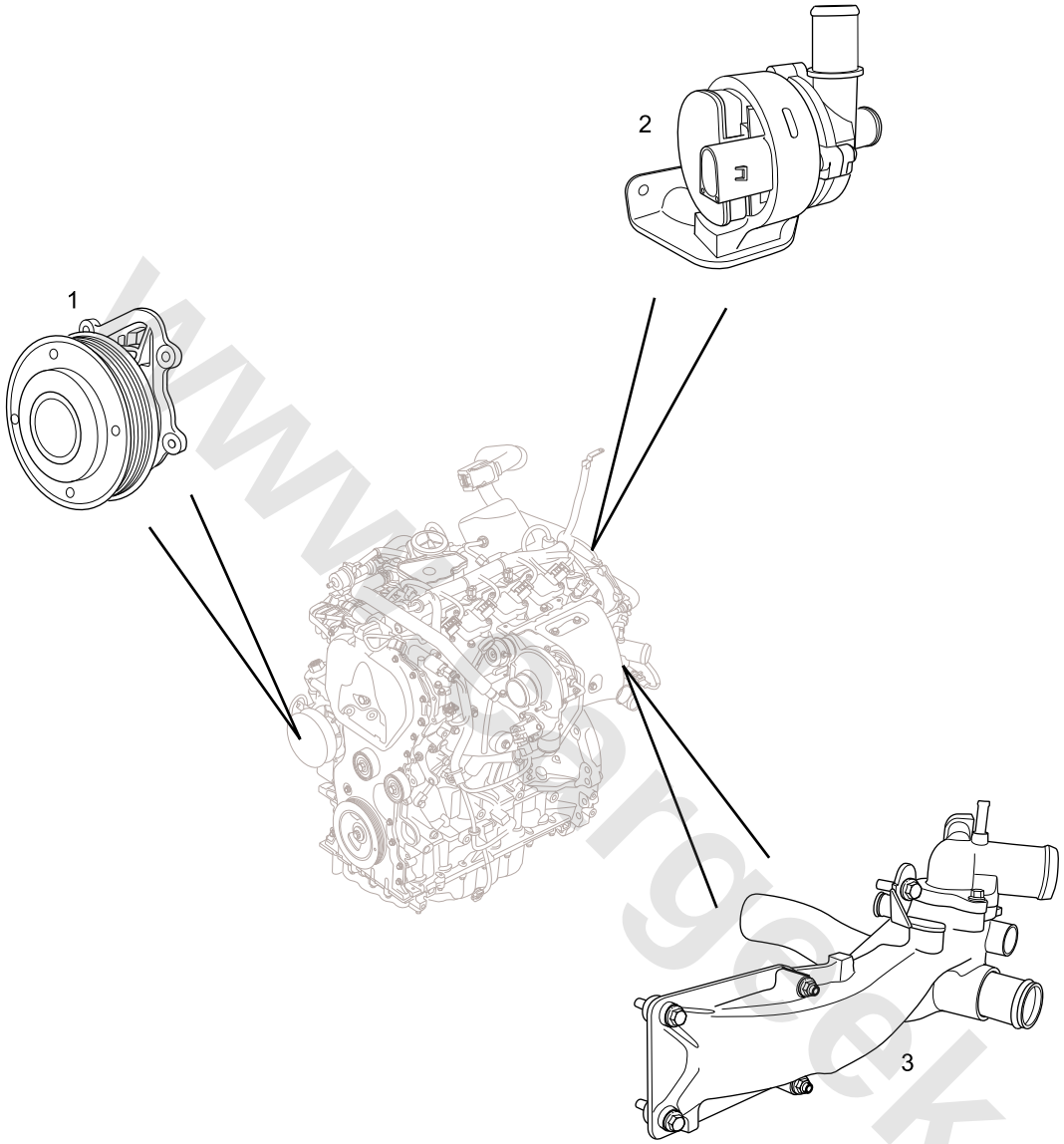

S3210190

1. Clutch Water Pump
2. Electronic Water Pump
3. Thermostat Assembly

www.cargeek.ir

www.cargeek.ir

Water Pump and Thermostat - (1.5L Turbocharged Engine)

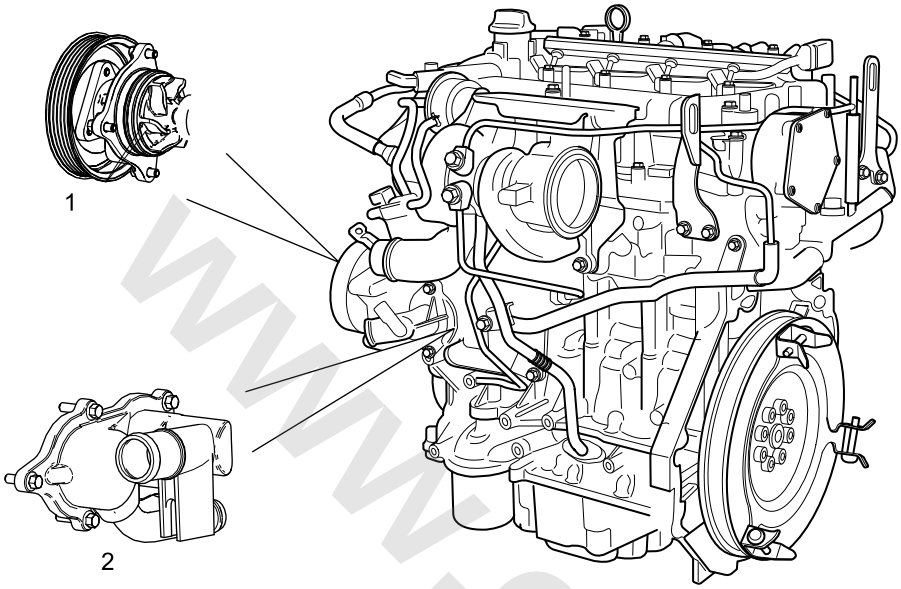

1. Water Pump
2. Thermostat Assembly

www.cargeek.ir

www.cargeek.ir

www.cargeek.ir

Description

Overview

The cooling system circulates the engine coolant in the loop of engine and heater core. The coolant is the mixture of 50% water and 50% organic acid technique (**OAT**), which helps to maintain the optimum operating temperature of the engine when the environment and engine working conditions are different.

Caution: Engine coolant will damage paint finished surfaces. If spilled, immediately rinse area with plenty of water.

The engine cylinder block is equipped with a "damping" ladder-like cylinder liner. The thicker upper part of the cylinder liner forms the "wet" part, at the same time, the thinner lower part sliding and fitting into the cylinder block forms the "dry" part. This thermal efficiency design exposes the upper part of the cylinder liner to the coolant and dissipates heat directly through its outer surface.

To keep its optimum efficiency and corrosion resistance performance, the coolant shall be replaced regularly.

Components of Cooling System

Clutch Water Pump (2.0L turbocharged engine)

The clutch water pump is a centrifugal impeller pump. The water pump consists of the clutch, solenoid, spiral case, bearing and impeller. The clutch and impeller are fitted on the bearing, and the solenoid and bearing are fitted on the spiral case. The centrifugal force caused by impeller rotation drives the coolant to flow and provides pressure. The bearing is provided with grease, the two ends are sealed to prevent grease leak and ingress of foreign material.

The crankshaft turns the water pump via the drive belt pulley, which allows the coolant to circulate in the cooling system.

When starting a cold engine, the clutch assembly works, the water pump pulley rotates, and the water pump impeller does not turn, the engine coolant does not circulate, the engine warm-up time is shortened and CO2 emission and fuel consumption are reduced. When the engine coolant achieves a curtain temperature, the clutch engages, the water pump impeller rotates and the coolant starts to circulate.

Coolant Pump (1.5L turbocharged engine)

The coolant circulates through the coolant pump drive, and the coolant pump is fitted on the rear upper part of the engine crankcase drive, which is sealed to the cylinder block by an O ring and driven by the crankshaft drive belt.

Electronic Water Pump (2.0L turbocharged engine)

The electronic water pump is part of the engine cooling system, which is driven by the impeller of the brushless motor. When the engine stops (at this stage, the clutch water pump does not work and the coolant does not recirculate), after working for few minutes, the electronic water pump will recirculate the coolant in the turbocharger and eliminate the heat accumulated in the turbocharger, this process can avoid coking and carbonization of the oil around the turbine bearing due to overheating after stalling of the engine, and thus protects the bearing and extends the service life of the turbocharger.

A sound can be heard when the electronic water pump works, this indicates the motor is in normal state.

Cooling Water Pipe

The coolant pipe is connected with all components of the cooling system, and the coolant flows to the component via the coolant hose. The coolant hose is fixed to each component by spring clamps.

Expansion Tank (2.0L turbocharged engine)

The injection molding coolant expansion tank with a pressure relief valve is fitted on the left frame. One of the overflow pipes connects the expansion tank with the short pipe of the engine overflow port, the other connects the tee pipe of the radiator inlet pipe. The hose under the expansion tank connects the cooling system. When thermal expansion of the coolant occurs, the excess coolant in the cooling system will flow back to the expansion tank through the overflow/return pipe; when the cooling system is short of coolant, the coolant in the expansion tank will flow into the cooling system through the water inlet pipe.

Expansion Tank (1.5L turbocharged engine)

The injection molding coolant expansion tank with a pressure relief valve is fitted on the left frame. One of the overflow pipes connects the expansion tank with the short pipe of the engine overflow port, the other connects the connector at the top of the radiator. The hose under the expansion tank connects the cooling system. When thermal expansion of the coolant occurs, the excess coolant in the cooling system will flow back to the expansion tank through the overflow/return pipe; when the cooling system is short of coolant, the coolant in the expansion tank will flow into the cooling system through the water inlet pipe.

Electric Thermostat

The electronic thermostat is a wax-type valve with heating elements which combine with the wax package.Indirect control of the thermostat opening can be realized by controlling the heat dissipation of the heating element according to the control signal from the **ECM**.

When the coolant temperature is low, the heating element of the electronic thermostat does not work, the wax-type component of the thermostat is in solid state, and the

www.cargeek.ir

thermostat valve switches off under the action of the spring, at this point, the cooling system is in a small circulation status, i.e. the coolant cannot enter into the radiator for circulation, but it can flow to the heater core by the bypass circuit. When the coolant temperature rises, the heating element of the electronic thermostat works, the wax-type components start melting into liquid state gradually followed by the increase of volume, then the thermostat valve will open gradually under the effect of the push rod, at this time, the cooling system is in a big circulation status. When the thermostat is fully open, the coolant flows through the radiator.

When the engine works at a low/medium load, increase of the engine water temperature can decrease oil viscosity, mechanical friction loss of the piston, etc and heat transfer loss and optimize combustion; when the engine works at a high load/speed, decrease of the engine temperature allows the engine to cool down rapidly. The thermostat keeps the coolant temperature at an optimum level for engine operation.

Radiator and Cooling Fan

The radiator is of aluminum crossflow type with injection moulding water tanks on both ends (for wet automatic transmission model, automatic transmission oil cooler is locate in the left water chamber of the radiator. The cooling hose linked with the transmission connects the bushing of the transmission oil cooler by quick connectors). The radiator supports the cooling fan assembly, A/C (**A/C**) condenser. The top of the radiator is secured on the upper radiator beam by two bolts. The bottom of the radiator is located in the rubber bushing supported by the upper radiator beam bracket. The plastic wind scooper behind the front bumper is used to guide the airflow through the radiator. The condenser fixed by two bolts is fitted on the upper side of the front radiator.

The cooling fan assembly is fitted at the rear of the radiator. The cooling fan cools the radiator by intaking the air through the radiator.

www.cargeek.ir

www.cargeek.ir

Operation

Coolant Flow

2.0L Turbocharged Engine

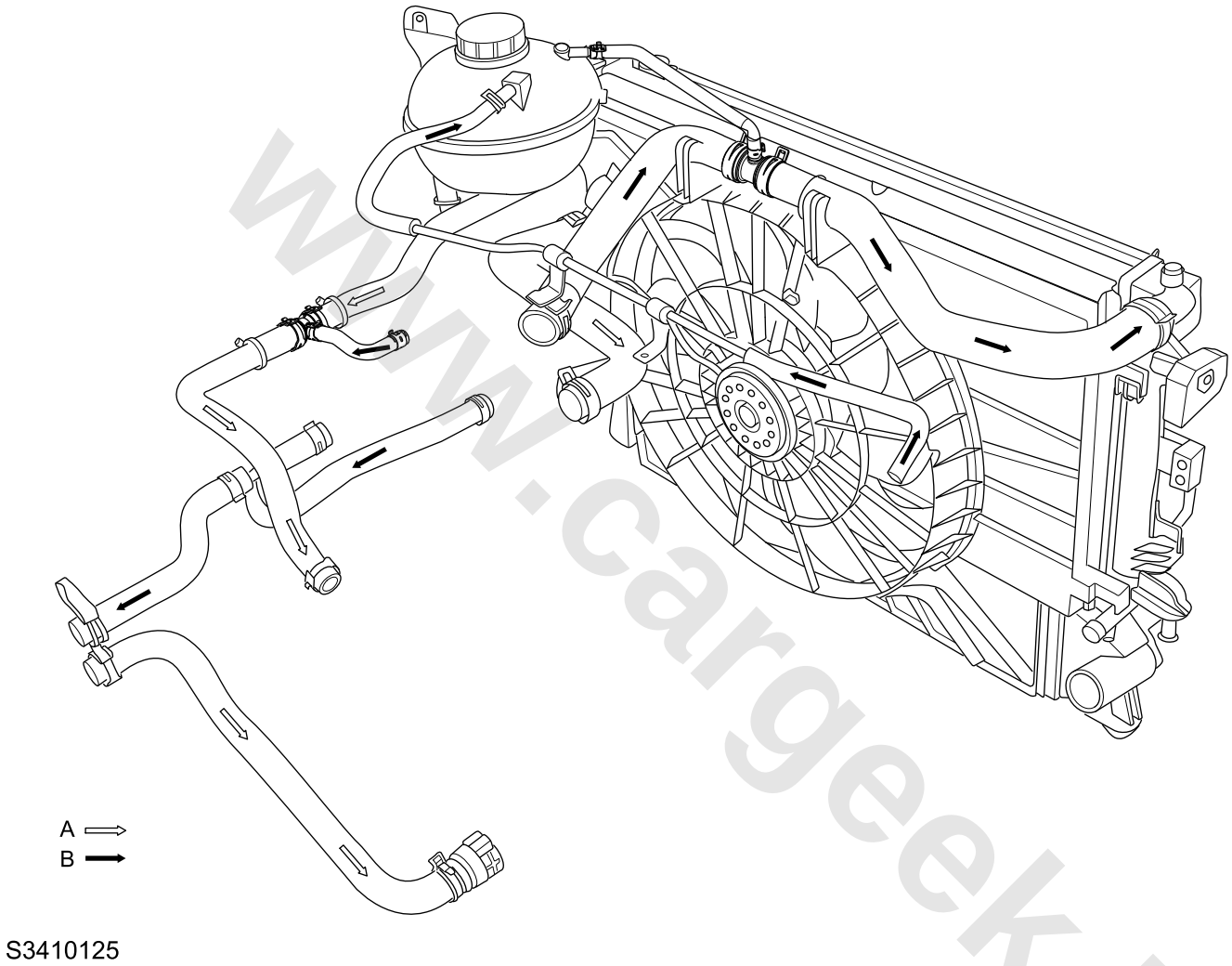

A= Cold; B= Hot

1.5L Turbocharged Engine

www.cargeek.ir

www.cargeek.ir

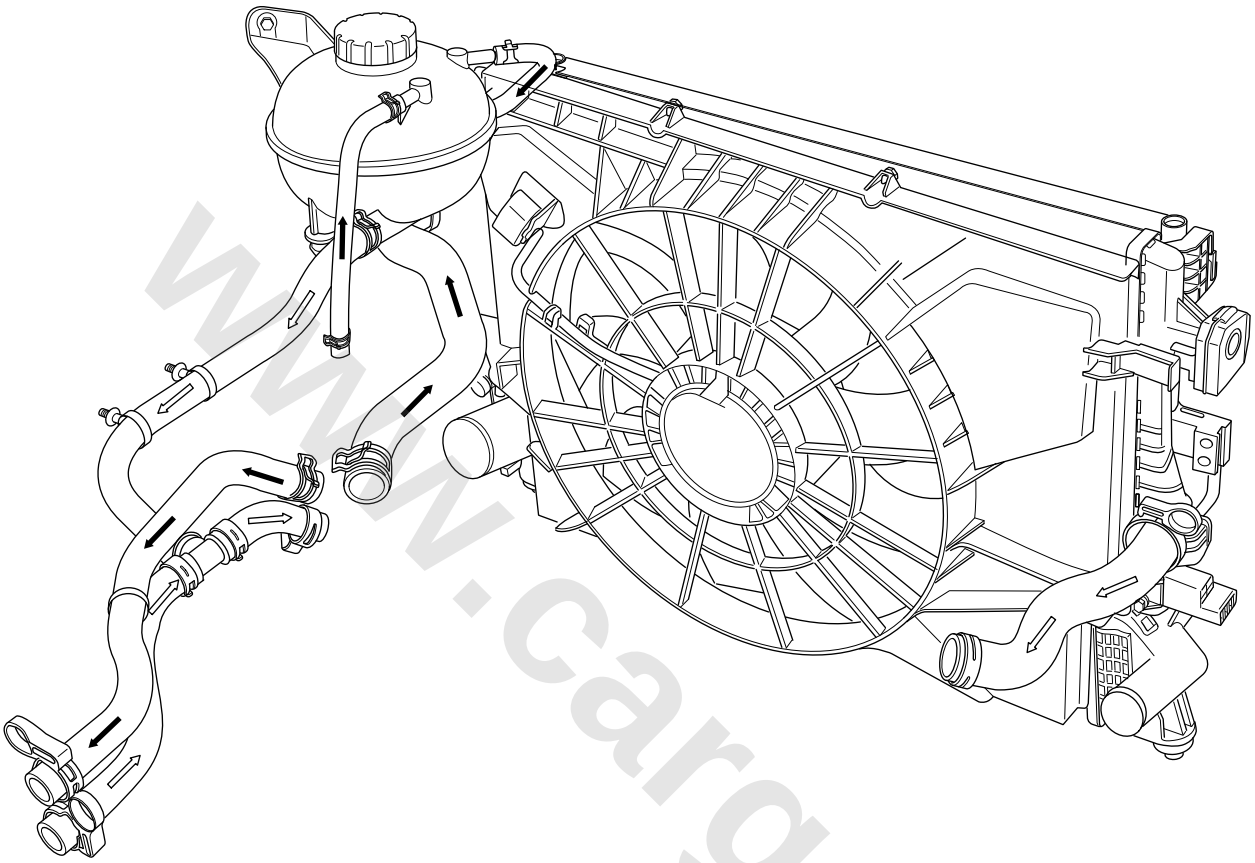

S3410222

A= 冷 B=热

Coolant Flow

The cooling system utilizes the heat conduction principle, conducting heat from the engine components to the coolant. When the engine is cold, keep the thermostat closed to prevent the coolant from flowing through the radiator, however, a small amount of coolant may pass through the bypass, this helps to prevent the accumulated pressure from getting too high. When the engine reaches the normal operating temperature, the thermostat opens, the cool coolant enters into the cylinder block through the hose at the bottom of the radiator,and the hot coolant will flow into the radiator through the hose at the top of the radiator, so that the cool and hot coolant may be balanced to maintain the engine at the best temperature. When the thermostat is fully open, all coolants flow through the radiator.

2.0L Turbocharged Engine

Coolant flows from the right top water chamber to the left bottom water chamber and passes through the radiator, it is cooled by the air flows by the radiator core before flowing back to the engine cylinder block via the thermostat.

The coolant from the thermostat flows through the tee pipe, and enters all the way into the heater core to meet the need of heating and into the turbocharger to satisfy the cooling demand of the turbocharger.

www.cargeek.ir

Coolant entered into the turbocharger flows around the bearing housing and comes into the expansion tank outlet pipe via the return pipe before flowing into the engine eventually.

Meanwhile, the expansion tank will remove the air in the coolant. The excess coolant produced by thermal expansion returns to the expansion tank through the overflow pipe of the cylinder head. The lower side of the expansion tank is provided with a hose connected with the cooling system, which returns coolant to the cooling system.

1.5L Turbocharged Engine

Coolant flows from the right top water chamber to the left bottom water chamber and passes through the radiator, it is cooled by the air flows by the radiator core before flowing back to the engine cylinder block via the thermostat.

Coolant from the engine enters into the heater core through the heater core water inlet pipe, which meets the requirement for heating.

Meanwhile, the expansion tank will remove the air in the coolant. The excess coolant produced by thermal expansion returns to the expansion tank through the overflow pipe of the left top radiator and cylinder head. The hose under the expansion tank is connected with the heater core water outlet pipe through the tee pipe, which also connects the engine and compensates the engine cooling system.

The expansion tank cap with relief valve and vacuum valve isolates the cooling system from the ambient atmosphere, the coolant expands when the temperature rises, and the pressure of the cooling system will increase accordingly. The increased pressure raises the boiling point of the coolant, allowing the engine to run at a higher, more efficient operating temperature without the risk of coolant boiling. The pressurization of the cooling system is limited, so a pressure relief valve is provided on the expansion tank cap. By this way, when the working pressure of the system exceeds the permissible maximum value, the excess pressure in the cooling system can be released.

Warning: Since injury such as scalding could be caused by escaping steam or coolant, do not remove the filler cap from the coolant expansion tank while the system is hot.

The engine coolant temperature signal is measured by the **ECT** sensor. The **ECM** controls the cooling fan, etc, by monitoring the coolant temperature signal from this sensor. The **ECM** sends the engine coolant temperature signal to the **HS CAN** 1, the GateWay (gateway controller) forwards it to the **HS CAN** 3 and IPK controller, which is used to indicate the coolant temperature and provide high temperature warning. If the coolant sensor fails or coolant temperature is extremely high, the IPK will alert the driver by the warning lamp and message.

Cooling Fan Control Policy

The cooling fan provides the corresponding control signal via the **ECM** and realizes the control by the relay and speed regulation resistor unit. The **ECM** utilizes the information provided by the **ECT** sensor, air conditioning pressure switch, vehicle speed sensor and **ATC** to control the fan speed and engine coolant temperature.

Cooling Fan ON

The **ECM** sends the cooling fan ON signal according to the coolant temperature and the pressure when the A/C is running.

Cooling Fan OFF

With the engine running, check if the A/C is ON and if the coolant temperature is below the specified value, then turn off the cooling fan.

With the engine stationary, check coolant temperature and check if the corresponding cooling fan is ON/OFF.

Cooling Fan Operation - In Failure Condition

When failure of the coolant temperature sensor, A/C pressure switch and vehicle speed sensor occur, operate the cooling fan in accordance with the relevant fault strategy.

Cooling Fan Relay Unit

The cooling fan relay unit includes relay 1, relay 2 and relay 3.

The cooling fan relay unit is connected to the **ECM** by 2 wires, the other 3 wires connects the internal relay winding to the cooling fan. The cooling fan relay provides the 12V supply via the battery.

When the cooling fan runs at low speed, **ECM** provides the ground for Pin 16 of the relay connector BY014.

When the cooling fan runs at medium speed, **ECM** provides the ground for Pin 14, 15 of the relay connector BY014.

When the cooling fan runs at high speed, **ECM** provides the ground for Pin 14, 15 and 16 of the relay connector BY014.

The table below shows the specific cooling fan operation for low/high/medium fan speed.

Relay 1	Relay 2	Relay 3	Cooling Fan Gear
OFF	OFF	OFF	0 (OFF)
OFF	OFF	ON	1 (Low Speed)
ON	ON	OFF	2 (Medium Speed)
ON	ON	ON	3 (High Speed)

www.cargeek.ir

Warning: Keep clear of the cooling fan. The fan may start automatically without warning, even after the engine is turned off.

www.cargeek.ir

www.cargeek.ir

www.cargeek.ir

Service Procedures-2.0T

Coolant - Drain and Refill

Drain

1. Remove the expansion tank cap.

Warning: Since injury such as scalding could be caused by escaping steam or coolant, do not remove the filler cap from the coolant expansion tank while the system is hot.

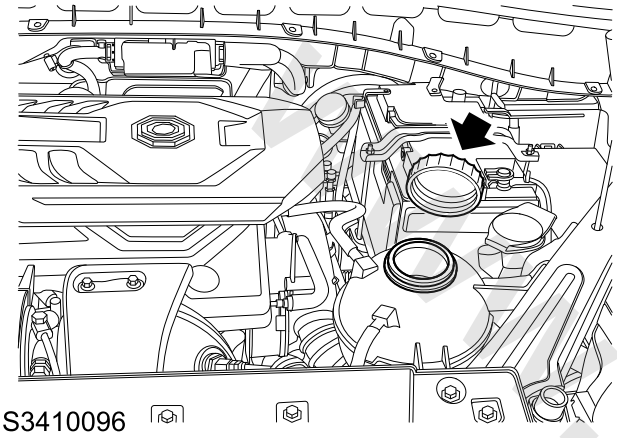

S3410096

2. Secure a proper container to collect the coolant.
3. Raise the vehicle on a lift.
4. Turn off the drain valve at the bottom of the engine radiator.

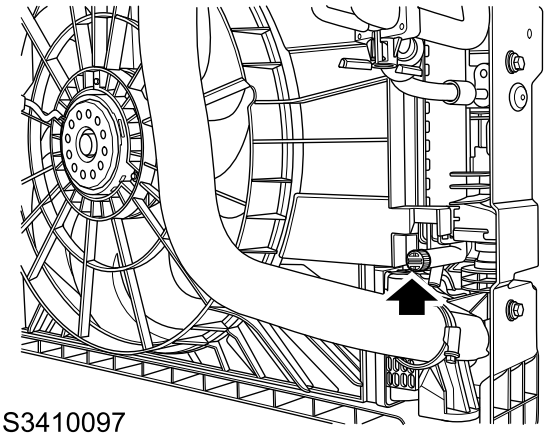

S3410097

5. Drain the engine cooling system.

Refill

1. Turn off the coolant/water drain valve under the radiator.
2. Prepare the coolant of specified concentration.

☞ **Fluid**

3. Open the expansion tank cap. Refill the expansion tank until the coolant reaches the neck of the expansion tank and keeps still.
4. Ensure that the air conditioning is closed.
5. Start the engine and allow it to run at 1500~2500 RPM. Refill the expansion tank as required to keep the level just below the neck of the expansion tank. When the coolant level reaches the neck of the expansion tank due to thermal expansion, fit the expansion tank cap.
6. Continuously run the engine at the speed of 1500~2500 RPM until the cooling fan operates, and then run the engine at idle speed until the cooling fan stops.
7. Turn off the engine and allow it to cool for 30 minutes.
8. Inspect the cooling system for any leak.
9. Check if the coolant level is between MIN and MAX. If not, open the expansion tank cap, refill the coolant to the maximum level or keep it between MIN and MAX as required.

www.cargeek.ir

Expansion Tank Cap - Pressure Test

Check

1. Visually check the expansion tank cap for any leak.
2. Check the hose for signs of rupture and distortion and the attachment strength of pipeline connection.
3. Open the coolant expansion tank cap.

Warning: Since injury such as scalding could be caused by escaping steam or coolant, do not remove the filler cap from the coolant expansion tank while the system is hot.

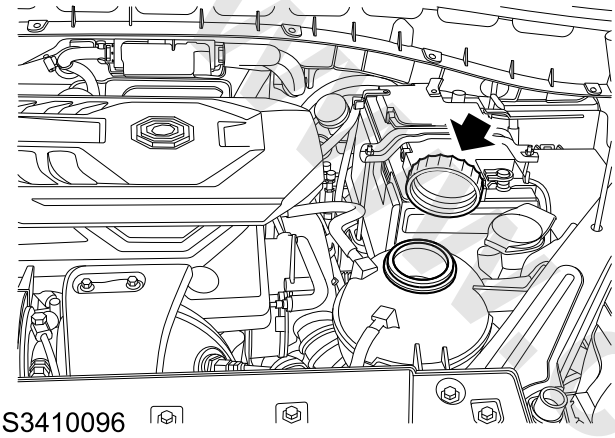

S3410096

4. Fit the **TEN00010** to the expansion tank cap.

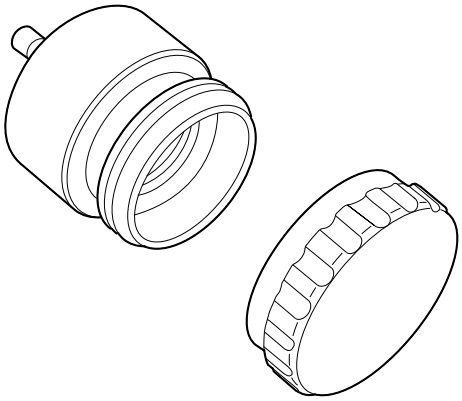

S143049

5. Connect the pressure hose of the **T14001** to the **TEN00010**.

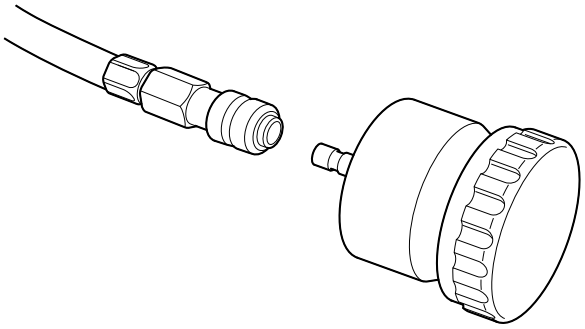

S143047

6. Pressurize the expansion tank cap slowly to the specified pressure, then check the pressure, if the pressure range is maintained within 140-160KPa, the expansion tank cap is normal.
7. Release pressure through the pressure relief valve on the pressurization tool.

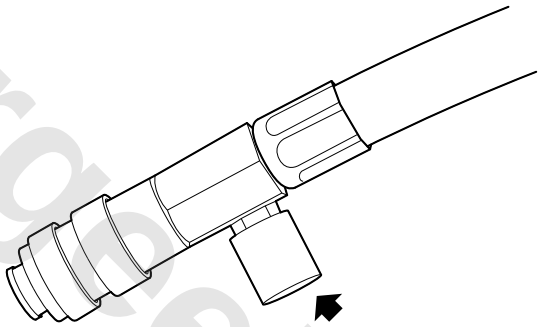

S143048

8. Remove the **T14001** pressure hose from the **TEN00010**.
9. Remove the expansion tank cap from the **TEN00010** and fit it to the expansion tank.

www.cargeek.ir

www.cargeek.ir

System Pressure Test

Check

1. Check the hose for signs of rupture and twist and the attachment strength of pipeline connection.
2. Open the coolant expansion tank cap.

Warning: Since injury such as scalding could be caused by escaping steam or coolant, do not remove the filler cap from the coolant expansion tank while the system is hot.

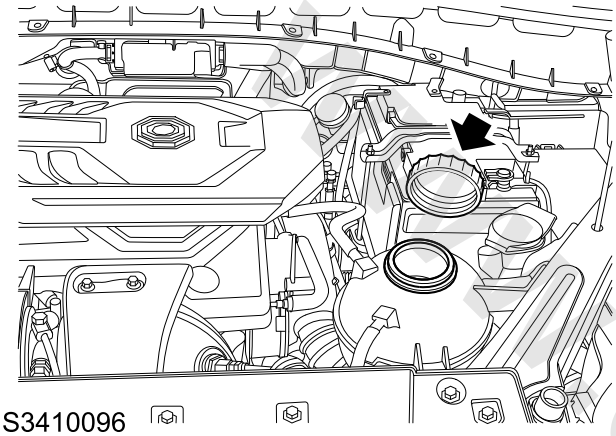

S3410096

3. Fit the **TEN00015** to the expansion tank.
4. Connect the pressure hose of the **T14001** to the **TEN00015**.
5. Pressurize the system to the pressure of 140-160KPa slowly and check whether there is any leakage.

Warning: Do not exceed the setting pressure value, or the cooling system will be damaged.

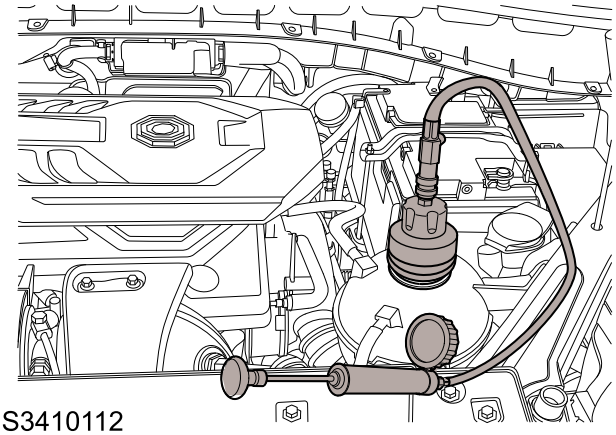

S3410112

6. Visually inspect the engine and the cooling system for signs of coolant leakage.
7. Release pressure through the relief valve on the **T14001**.

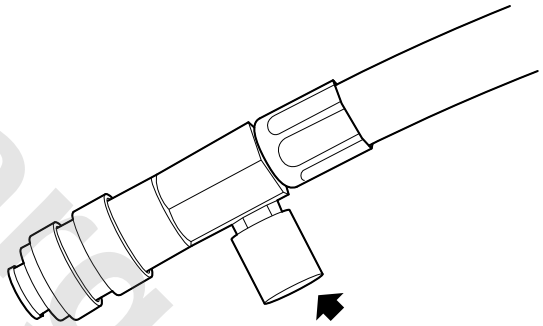

S143048

8. Disconnect the **T14001** hose from the **TEN00015**.
9. Remove the **TEN00015** from the expansion tank and fit the expansion tank cap.

www.cargeek.ir

www.cargeek.ir

Coolant Expansion Tank

Remove

1. Open the coolant expansion tank cap.

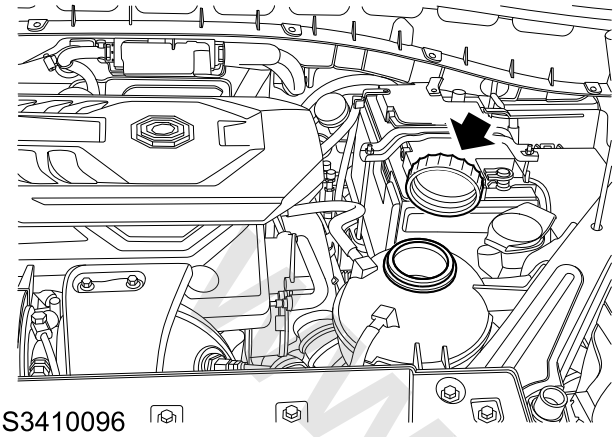

S3410096

2. Remove 2 bolts securing the coolant expansion tank on the frame.

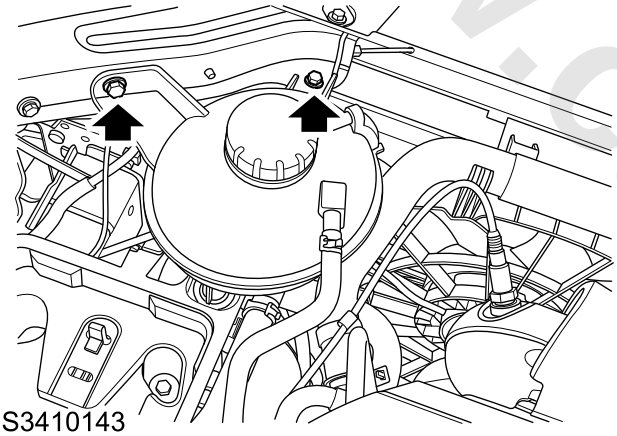

S3410143

3. Prepare an appropriate container to collect the coolant dripping from the expansion tank.
4. Release the clamp and disconnect the engine overflow hose (1).
5. Release the clamp and disconnect the expansion tank outlet pipe (2).
6. Release the clamp and disconnect the cooling system overflow hose (3).

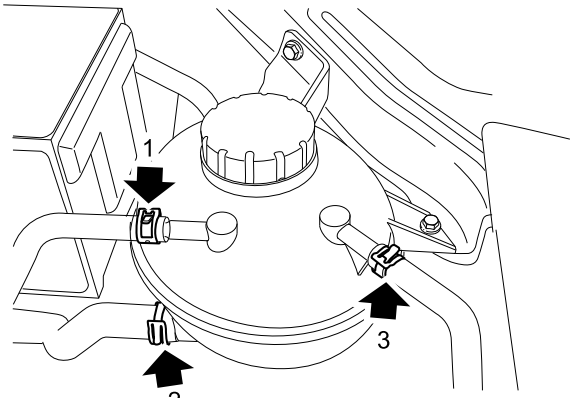

S3410098

7. With the water pipe clips, clamp the expansion tank outlet pipe to prevent coolant loss.
8. Remove the coolant expansion tank from the vehicle.

Refit

1. Fix the overflow pipe of the cooling system to the expansion tank, and secure it with clamps.
2. Fit the expansion tank outlet pipe to the coolant expansion tank and secure with clamps.
3. Fit the engine overflow pipe to the coolant expansion tank and secure with clamps.
4. Secure the coolant expansion tank on the frame, fit 2 bolts, and tighten to **4–6Nm**.
5. Refill coolant to the specified level.
6. Fit the coolant expansion tank cap.

www.cargeek.ir

www.cargeek.ir

Radiator Inlet Pipe

Remove

1. Drain the engine cooling system.

☞ **Cooling System Drain**

2. Release the clamp (3) securing the harness on the radiator inlet pipe.
3. Loosen the clamps and disconnect the radiator inlet pipe (2) from the radiator.
4. Loosen the clamps, disconnect the radiator inlet pipe (1) from the thermostat housing and remove the radiator inlet pipe.

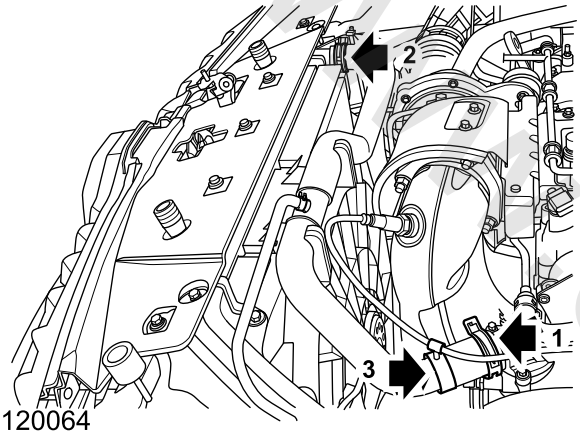

S3120064

5. Release the clamp and disconnect the radiator inlet pipe (3).

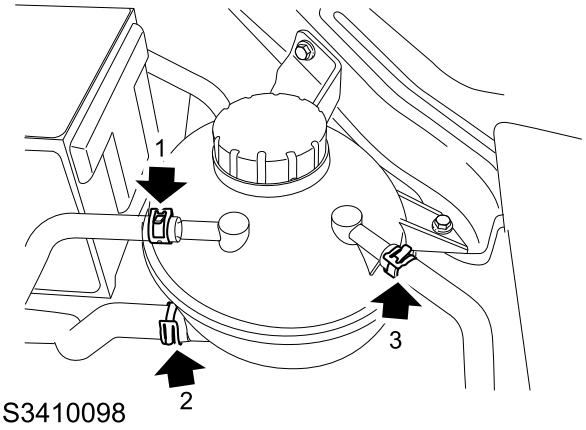

S3410098

Refit

1. Fix the radiator inlet pipe to the expansion water tank, and secure it with clamps.
2. Connect the radiator inlet pipe to the hard thermostat pipe, and fix it with clamps.
3. Connect the radiator inlet pipe to the radiator, and fix it with clamps.
4. Fix the harness to the radiator inlet pipe.
5. Refill the engine cooling system.

☞ **Engine Cooling System Refill**

Radiator Outlet Pipe

Remove

1. Drain the engine cooling system.

☞ **Engine Cooling System Drain**

2. Remove 2 bolts fixing the expansion tank to the body and take away the expansion tank.

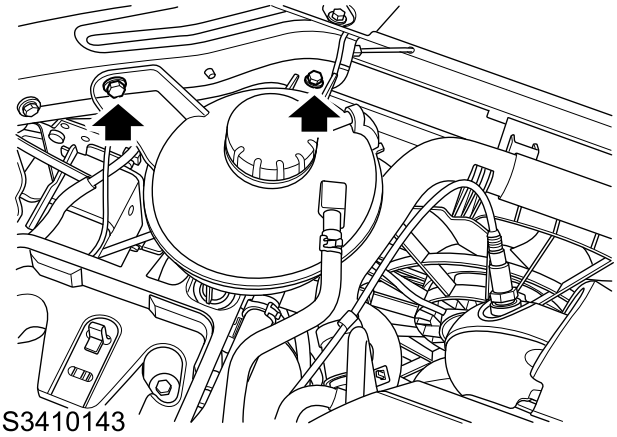
S3410143

3. Loosen the clamps and disconnect the radiator outlet hose (2) from the radiator.
4. Release the clamp and disconnect the radiator outlet hose (1) from the thermostat housing assembly.

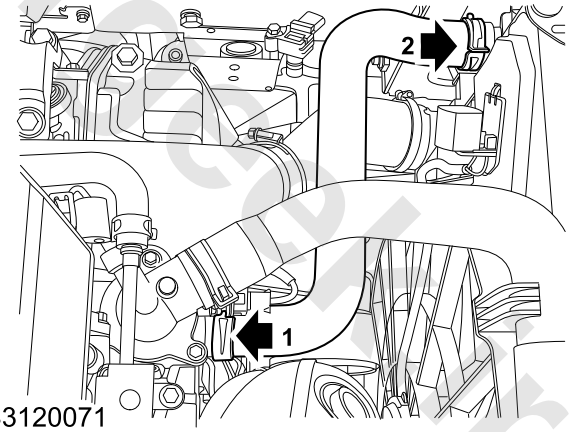

S3120071

5. Remove the radiator outlet hose from the vehicle.

Refit

1. Connect the radiator outlet pipe to the thermostat housing, and fix it with clamps.
2. Connect the radiator outlet pipe to the radiator, and fix it with clamps.
3. Secure the coolant expansion tank on the frame, fit 2 bolts, tighten them to **4–6Nm**, and check the torque.
4. Refill the engine cooling system.

☞ **Engine Cooling System Refill**

www.cargeek.ir

www.cargeek.ir

Heater Water Inlet Pipe

Remove

1. Drain the engine cooling system.

☞ **Cooling System Drain**

2. Remove the electronic throttle intake pipe.

☞ **Electronic Throttle Intake Pipe Remove**

3. Release the clamp and disconnect the heater core water inlet pipe from the heater core (1).
4. Release the clamp and disconnect the heater core water inlet pipe from the electronic pump (3).

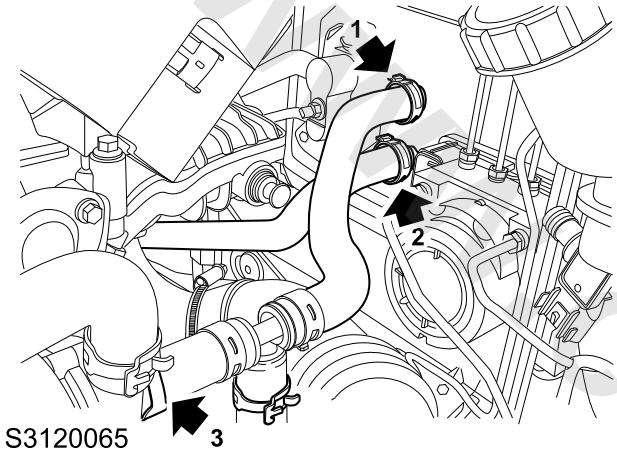

5. Release the clamp and disconnect the heater core water inlet pipe from the thermostat housing (3).

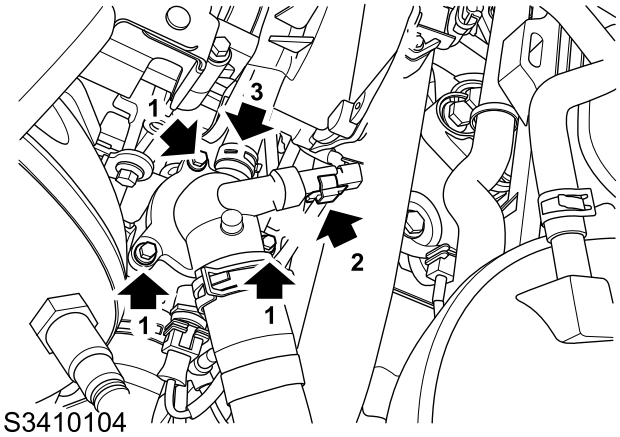

6. Remove the heater core water inlet pipe from the vehicle.

Refit

1. Fix the heater core water inlet pipe to the thermostat and secure with clamps.
2. Fix the heater core water inlet pipe to the electronic pump and secure with clamps.
3. Fix the heater core water inlet pipe to the electronic pump and secure with clamps.
4. Fit the electronic throttle intake pipe.

☞ **Electric Throttle Intake Pipe Refit**

5. Refill the engine cooling system.

☞ **Engine Cooling System Refill**

www.cargeek.ir

Heater Water Outlet Pipe

Remove

1. Drain the engine cooling system.

☞ **Cooling System Drain**

2. Release the clamp and disconnect the heater core water outlet pipe from the heater core (2).

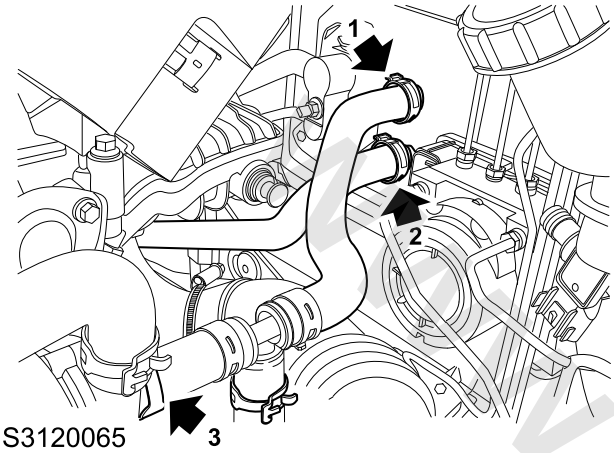

S3120065

3. Release the clamp and disconnect the heater core water outlet pipe from the hard pipe of the oil filter module assembly.

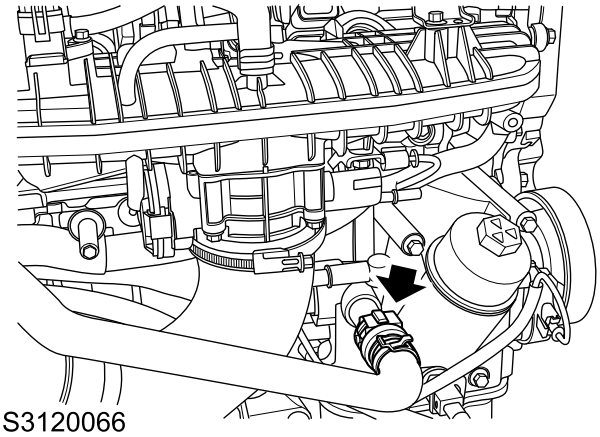

S3120066

4. Remove the heater water outlet pipe from the vehicle.

Refit

1. Fix the heater core water outlet pipe to the hard pipe of the oil filter module assembly, and secure with clamps.
2. Fix the heater core water outlet pipe to the heater core and secure with clamps.
3. Refill the engine cooling system.

☞ **Engine Cooling System Refill**

Expansion Water Tank Outlet Pipe

Remove

1. Drain the engine cooling system.

☞ **Engine Cooling System Drain**

2. Release the clamp (1) and disconnect the expansion tank outlet pipe from the expansion tank.
3. Release the clamp (2) and disconnect the expansion tank outlet pipe from the engine.
4. Cut off the 2 straps (3) fixing the expansion outlet pipe to the battery box.

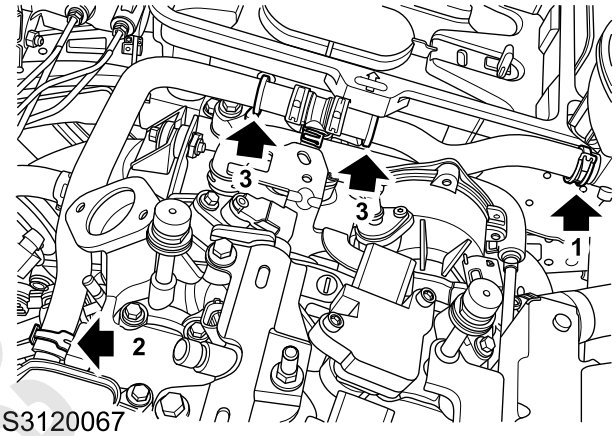

S3120067

5. Release the clamp and disconnect the turbocharger water outlet pipe.

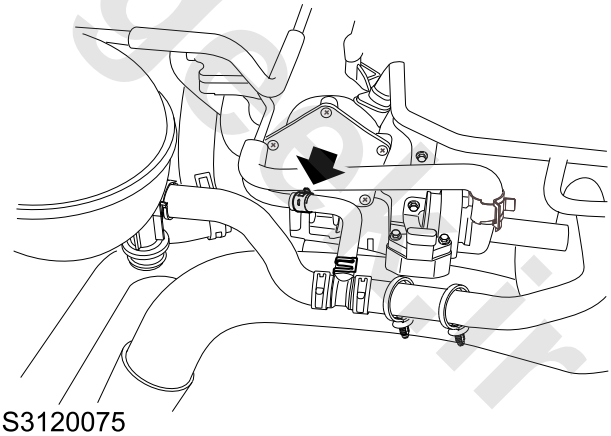

S3120075

6. Remove the expansion outlet pipe from the vehicle.

Refit

1. Fix the turbocharger water return hose to the turbocharger hard return pipe, and secure with clamps.
2. Fix the expansion water tank outlet pipe to the engine, and secure it with clamps.
3. Fix the expansion water tank outlet pipe to the expansion water tank, and secure it with clamps.
4. Fix the expansion water tank outlet pipe to the battery box, and secure it with straps.
5. Refill the engine cooling system.

☞ **Engine Cooling System Refill**

www.cargeek.ir

Engine Overflow Pipe A

Remove

1. Drain the engine cooling system.

☞ **Engine Cooling System Drain**

2. Release the clamp and disconnect overflow pipe A from the engine.

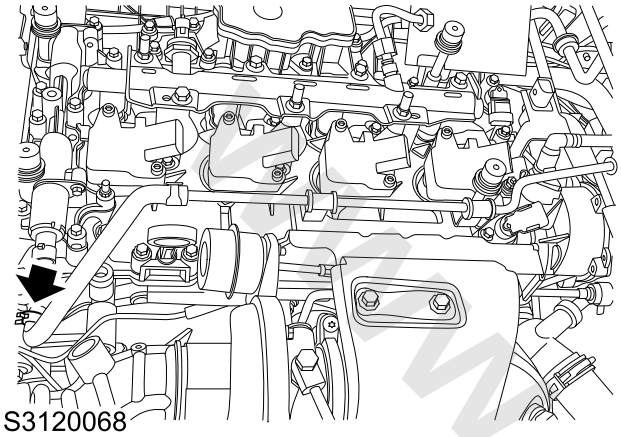

3. Release the clamp and disconnect the engine overflow pipe A and B (1).

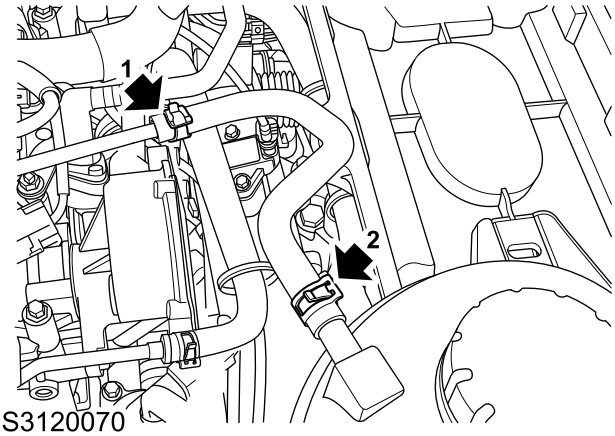

4. Remove 1 bolt (1) and 1 stud (2) fixing overflow pipe A to the engine.

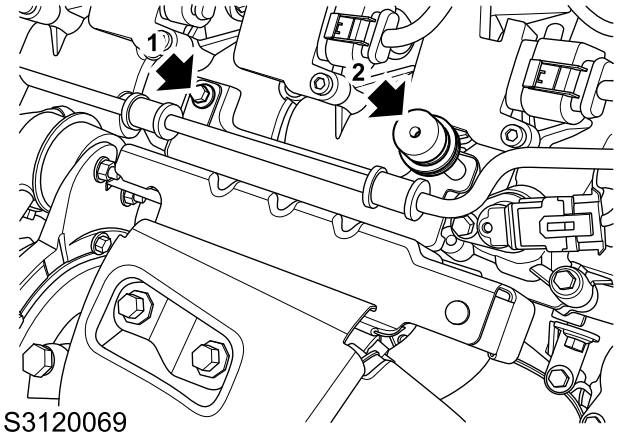

5. Remove the engine overflow pipe A from the vehicle.

Refit

1. Fix engine overflow pipe A to the engine, fit the bolt and stud, and tighten them.
2. Connect engine overflow pipe B and A, and secure with clamps.
3. Fix engine overflow pipe A to the engine, and secure it with clamps.
4. Refill the engine cooling system.

☞ **Engine Cooling System Refill**

www.cargeek.ir

Engine Overflow Pipe B

Remove

1. Release the clamp and disconnect engine overflow pipe A and B (1).
2. Release the clamp and disconnect engine overflow pipe B from the expansion tank (2).

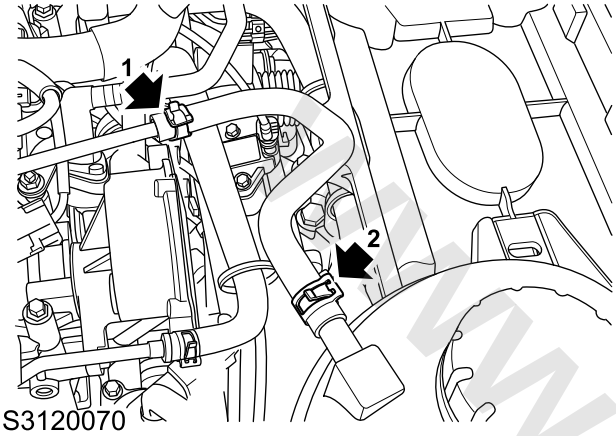

S3120070

3. Remove engine overflow pipe B from the vehicle.

Refit

1. Connect engine overflow pipe B and expansion water tank, and secure with clamps.
2. Connect engine overflow pipe B and A, and secure with clamps.
3. Refill the expansion water tank with maximum coolant.

Cooling Fan Assembly

Remove

1. Disconnect the battery negative.
2. Disconnect the connector of the low-speed cooling fan resistance.

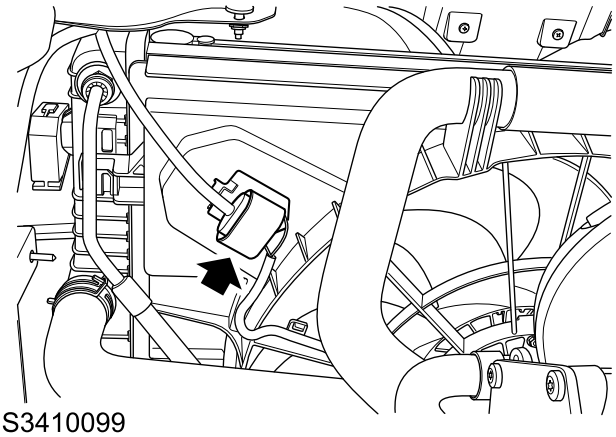

S3410099

3. Remove the front bumper.

☞ **Front Bumper Remove**

4. Release 6 bolts (1) and 2 nuts (2) securing the front anti-collision beam.

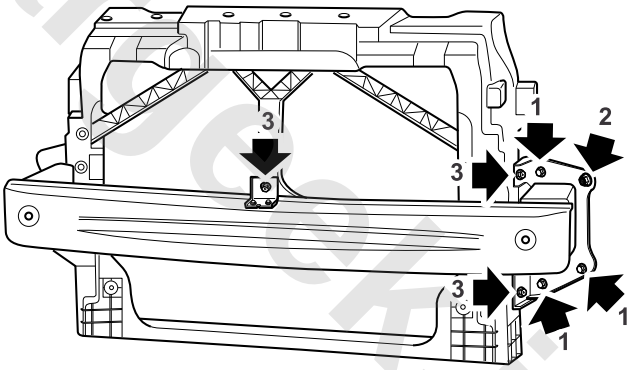

S6213006

5. Release 2 bolts and 2 clips fixing the cooling fan assembly to upper radiator beam.

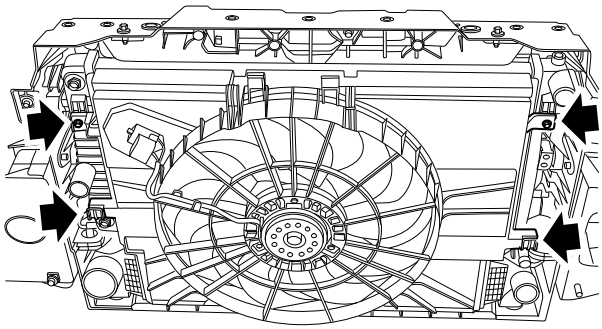

S3410100

6. Raise the vehicle on a lift.

www.cargeek.ir

7. Move the cooling fan assembly slowly in the engine compartment to remove it from the underbody.

Refit

1. Fit the cooling fan assembly to the vehicle.
2. Lower the vehicle.
3. Fit the cooling fan to the groove on the upper radiator beam, fit 2 screws, tighten to **4.5-5Nm** and check the torque.
4. Fit the front bumper beam and upper radiator beam assembly to the body, connect them with bolts and nuts respectively and tighten to **40–50Nm**.
5. Fit the front bumper.

☞ **Front Bumper Refit**

6. Connect the connector of the low-speed cooling fan resistance.
7. Connect the battery negative.

Cooling Fan Low Speed Resistance

Remove

Warning: Disconnect the battery to prevent operation of the cooling fan, which could cause personal injury.

1. Disconnect the battery negative.
2. Remove the cooling fan assembly.

☞ **Cooling Fan Assembly Remove**

3. Remove 1 screw securing the resistance on the wind scooper to remove the resistance.

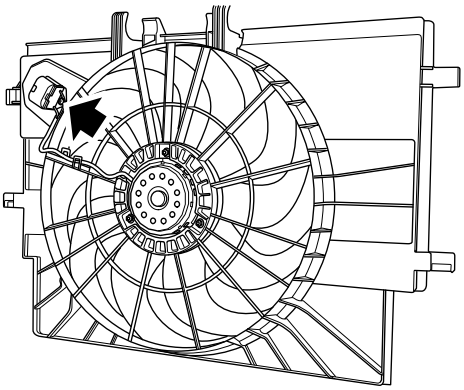

S3410101

4. Measure the wire (about 5cm) from the resistor side and cut the resistor from the wire at this location.
5. After cutting off the resistor, remove insulating skin (about 7mm) respectively from both ends of the remaining wire.

Refit

1. Take a resistance to be fitted and fit the heat-shrink tube to the resistance wire.

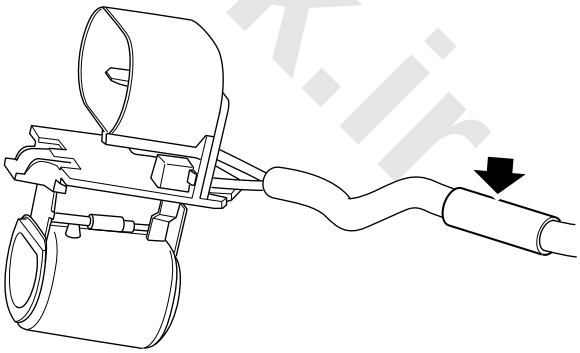

S3410124

2. Insert the metal part of the wire whose insulating skin has been removed into the double end connector connected to the wire of the resistance to be fitted, and press it with the terminal clamp of the **T84001**, and the connector shall bear a tension of at least 10kg without being loose.
3. Fit the heat-shrink tubes to the double end connector and heat it with proper heat supply to shrink and

www.cargeek.ir

agglutinate it with the wire.

4. Fix the resistance to the wind scooper with 1 self-tapping screw, fix the wire with tapes and ensure the wire and the serpentuator bushing will not move or interfere with the vane or cause any other interference.
5. Fit the cooling fan assembly.

Cooling Fan Assembly Refit

6. After replacement, connect the battery negative and start the engine to monitor the fan. If the fan does not buzz excessively during operation, then resume the low speed operating condition.

Radiator Assembly

Remove

1. Disconnect the battery negative.
2. Drain the engine cooling system.

Engine Cooling System Drain

3. Remove the coolant expansion tank.

Coolant Expansion Tank Remove

4. Remove the front bumper assembly.

Front Bumper Assembly Remove

5. Release the clamp and disconnect the radiator inlet hose (3).

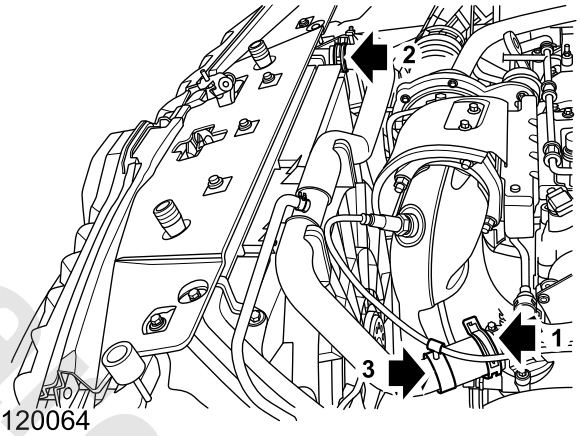

S3120064

6. Release the clamp and disconnect the radiator outlet hose (2).

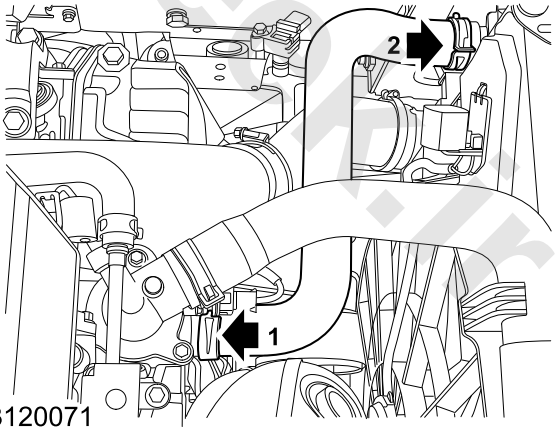

S3120071

7. Remove the cooling fan assembly.

Cooling Fan Assembly Remove

8. Prepare a proper container to collect the transmission fluid.
9. Disconnect the transmission fluid cooling pipe at the radiator side.

www.cargeek.ir

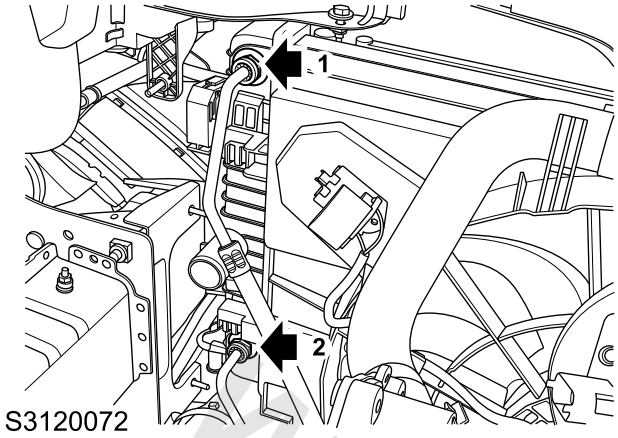

S3120072

10. Remove the upper radiator beam.

Upper Radiator Beam Remove

11. Remove the condenser from the radiator groove.

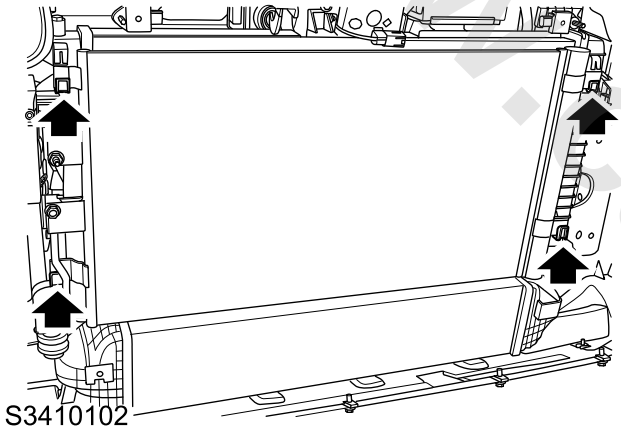
S3410102

12. Remove the radiator from the vehicle.

Refit

1. Fit the radiator to the vehicle.
2. Fix the condenser to the radiator groove.
3. Fit the upper radiator beam.

Upper Radiator Beam Refit

4. Fit the transmission fluid cooling pipe.
5. Fit the cooling fan assembly.

Cooling Fan Assembly Refit

6. Fit the radiator outlet pipe.
7. Fit the radiator inlet pipe.
8. Fit the front bumper assembly.

Front Bumper Assembly Refit

9. Refill transmission fluid.

Transmission Fluid Refill

10. Refill the engine cooling system.

Engine Cooling System Refill

11. Connect the battery negative.

2.0T Intercooler

Remove

1. Disconnect the battery negative.
2. Remove the bottom deflector.

Bottom Deflector Remove

3. Remove the front bumper.

Front Bumper Remove

4. Remove the cooling fan assembly.

Cooling Fan Assembly Remove

5. Loosen the clamps and disconnect the air inlet hose from the intercooler.

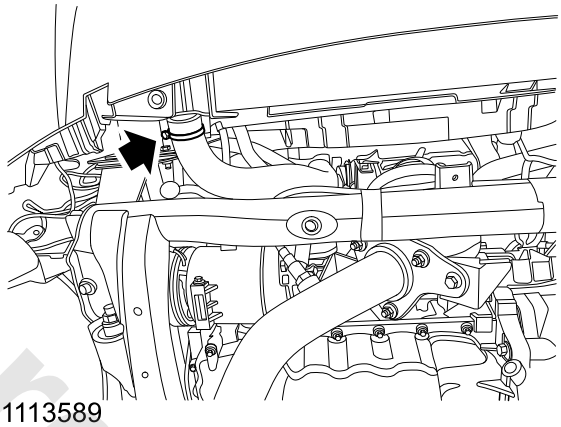
S1113589

6. Loosen the clamps and disconnect the air outlet hose from the intercooler (3).

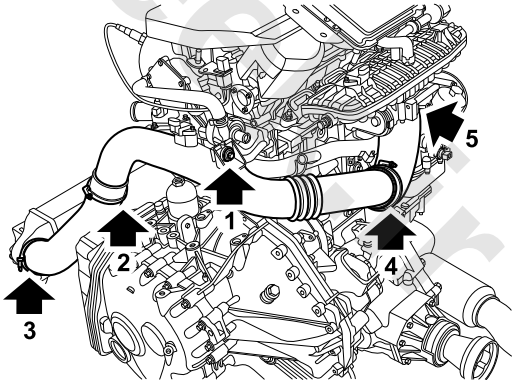

S1113588

7. Remove 2 bolts and 2 screws connecting the upper radiator beam, radiator and the intercooler.

www.cargeek.ir

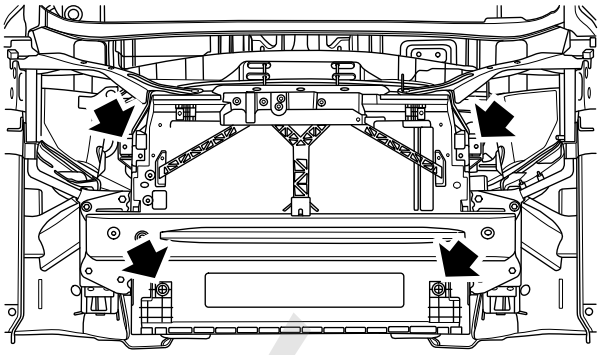

S5113004

8. Release 6 bolts (1) and 2 nuts (2) fixing the bumper beam to the body.

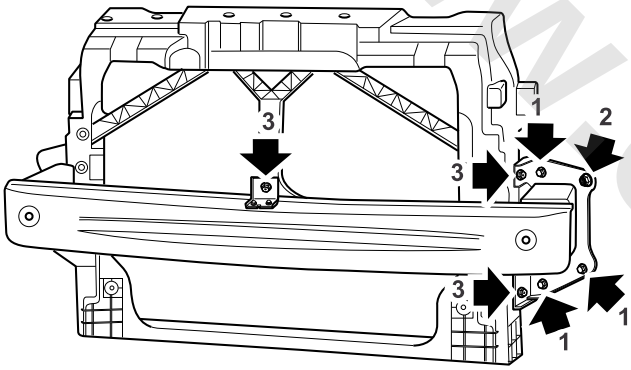

S6213006

9. Raise the vehicle on a lift.
10. Disconnect the intercooler from the groove on the upper radiator beam and remove it from the vehicle.

Refit

1. Fit the intercooler to the groove of the upper radiator beam.
2. Lower the vehicle.
3. Tighten the bolt of the front anti-collision beam to **40–50Nm**, and check the torque.
4. Fix the intercooler and radiator to the upper radiator beam, fit 2 bolts and screw, tighten to **4–6Nm** and check the torque.
5. Fit the intercooler air inlet hose to the intercooler, and fix it with clamps.
6. Connect the intercooler air inlet hose to the turbocharger, and fix it with clamps.
7. Fit the cooling fan assembly.

☞ **Cooling Fan Assembly Refit**

8. Fit the front bumper.

☞ **Front Bumper Refit**

9. Fit the bottom deflector.

☞ **Bottom Deflector Refit**

10. Connect the battery negative.

www.cargeek.ir

Radiator Airflow Side Deflector - Left Upper

Remove

1. Remove the front bumper assembly.

☞ **Front Bumper Assembly Remove**

2. Remove 1 bolt (1) fixing the air deflector of the left upper radiator to the body.
3. Remove 2 clips (2) fixing the air deflector of the left upper radiator to the air deflector of the left lower radiator.

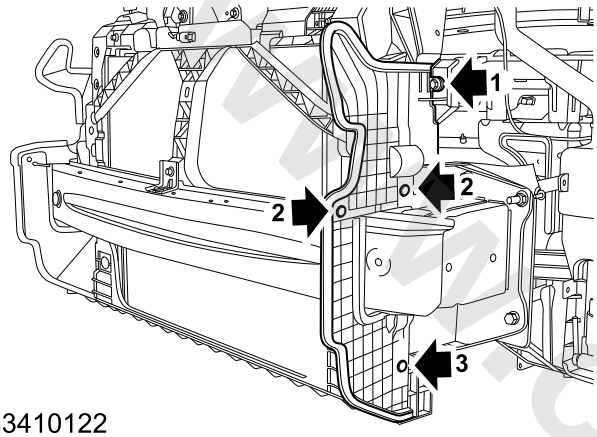

S3410122

4. Remove the air deflector of the left upper radiator.

Refit

1. Fit the left upper radiator airflow deflector on the vehicle.
2. Fix the left upper radiator airflow deflector to the left lower radiator airflow deflector and tighten with clips.
3. Fix the left upper radiator airflow deflector to the body, fit 1 bolts, and tighten to **3–5Nm**.
4. Refit the front bumper assembly.

☞ **Front Bumper Assembly Refit**

Radiator Airflow Side Deflector - Left Lower

Remove

1. Remove the front bumper assembly.

☞ **Front Bumper Assembly Remove**

2. Remove 3 clips (2), (3) fixing the left lower radiator airflow deflector to the left upper radiator airflow deflector and upper radiator beam.
3. Remove the left upper radiator airflow side deflector from the vehicle.

Refit

1. Fit the left lower radiator airflow deflector on the vehicle.
2. Fix the left lower radiator airflow deflector to the left upper radiator airflow deflector and upper radiator beam, fit the clips and tighten.
3. Refit the front bumper assembly.

☞ **Front Bumper Assembly Refit**

www.cargeek.ir

www.cargeek.ir

Radiator Airflow Side Deflector - Right Upper

Remove

1. Remove the front bumper assembly.

☞ **Front Bumper Assembly Remove**

2. Release 3 split pins of the air filter inlet pipe, and remove the air filter inlet pipe.

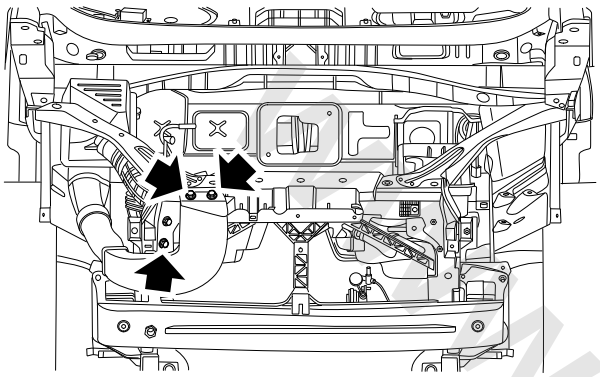

S5113001

3. Remove 1 bolt (1) fixing the air deflector of the right upper radiator to the body.
4. Remove 2 clips (2) fixing the air deflector of the right upper radiator to the air deflector of the left lower radiator.
5. Remove the air deflector of the left upper radiator.

Refit

1. Fit the air deflector of the right upper radiator to the vehicle.
2. Fix the air deflector of the right upper radiator to the air deflector of the right lower radiator, and secure with clips.
3. Fix the air deflector of the right upper radiator to the body, fit 1 bolt and tighten to **3–5Nm**.
4. Fit the air filter inlet pipe.
5. Fit the front bumper assembly.

☞ **Front Bumper Assembly Refit**

Radiator Airflow Side Deflector - Right Lower

Remove

1. Remove the front bumper assembly.

☞ **Front Bumper Assembly Remove**

2. Remove 3 clips (2), (3) fixing the right lower radiator airflow deflector to the right upper radiator airflow deflector and upper radiator beam.

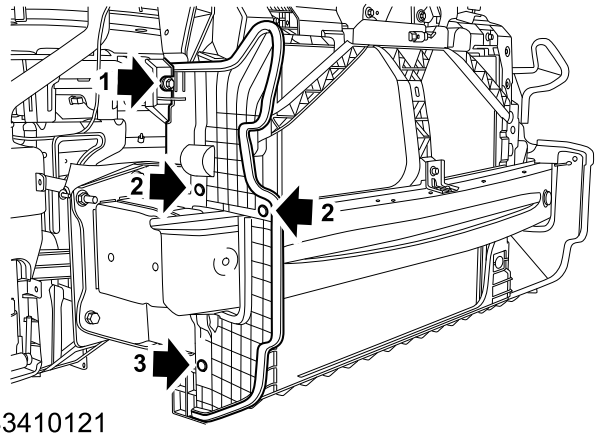

S3410121

3. Remove the right upper radiator airflow side deflector from the vehicle.

Refit

1. Fit the right lower radiator airflow deflector on the vehicle.
2. Fix the right lower radiator airflow deflector to the right upper radiator airflow deflector and upper radiator beam, fit the clips and tighten.
3. Refit the front bumper assembly.

☞ **Front Bumper Assembly Refit**

www.cargeek.ir

Transmission Outlet Hose

Remove

1. Drain part of the transmission fluid.
2. Remove the coolant expansion tank.

☞ **Coolant Expansion Tank Remove**

3. Remove the battery box bracket.

☞ **Battery Box Bracket Remove**

4. Remove 1 clip (1) fixing the transmission outlet hose to the radiator connector.

Caution: Always fit plugs to open connections to prevent contamination.

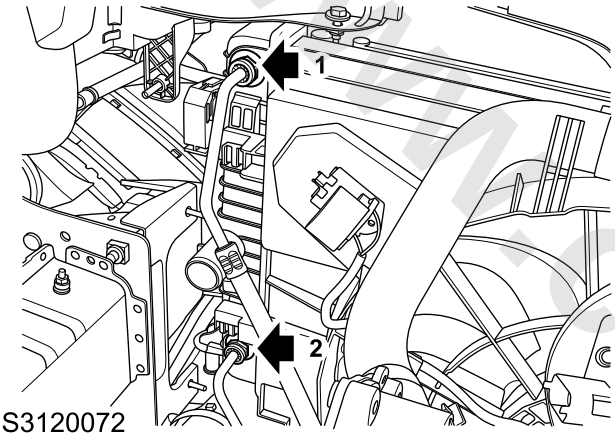

S3120072

5. Remove 1 bolt (2) fixing the transmission outlet hose to the transmission.

Caution: Always fit plugs to open connections to prevent contamination.

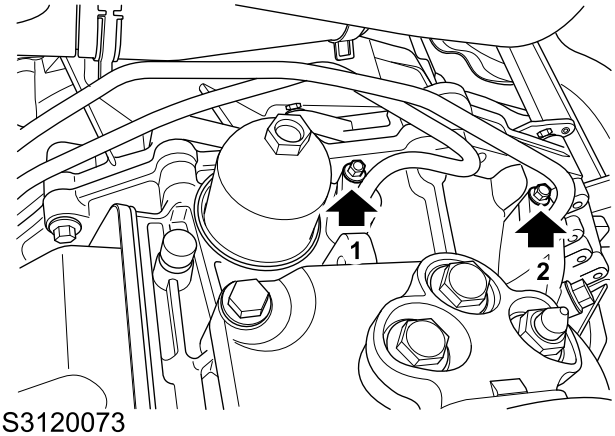

S3120073

6. Remove 1 bolt fixing the transmission outlet hose clip to the transmission.

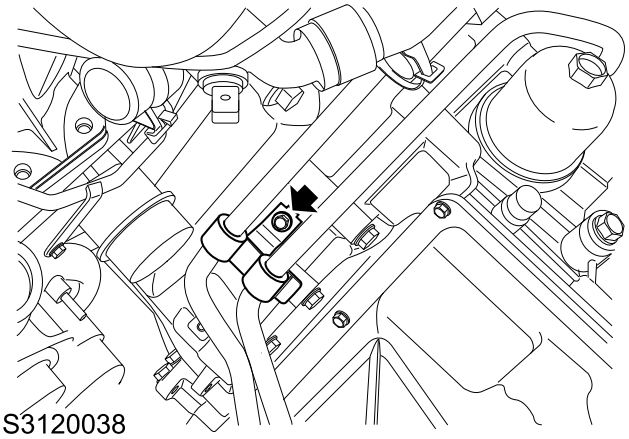
S3120038

7. Remove and discard the O ring of the cooling hose.
8. Remove the transmission outlet hose from the vehicle.

Refit

1. Fit the transmission outlet pipe to the vehicle.
2. Lubricate the new O ring with clean transmission fluid and fit it to the outlet cooling hose.
3. Fix the transmission outlet hose clip to the transmission, fit 1 bolt, tighten to **7–10Nm** and check the torque.
4. Fix the transmission outlet hose to the transmission, fit 1 bolt, tighten to **7–10Nm** and check the torque.
5. Fix the transmission outlet hose to radiator connector and secure with clips.
6. Fit the battery box bracket.

☞ **Battery Box Bracket Refit**

7. Fit the coolant expansion tank.

☞ **Coolant Expansion Tank Refit**

8. Add automatic transmission fluid.

☞ **Transmission Fluid Check and Refill**

www.cargeek.ir

www.cargeek.ir

Transmission Inlet Hose

Remove

1. Drain part of the transmission fluid.
2. Remove the coolant expansion tank.

☞ **Coolant Expansion Tank Remove**

3. Remove the battery box bracket.

☞ **Battery Box Bracket Remove**

4. Remove 1 clip (2) fixing the transmission inlet hose to the radiator connector and disconnect the hose.

Caution: Always fit plugs to open connections to prevent contamination.

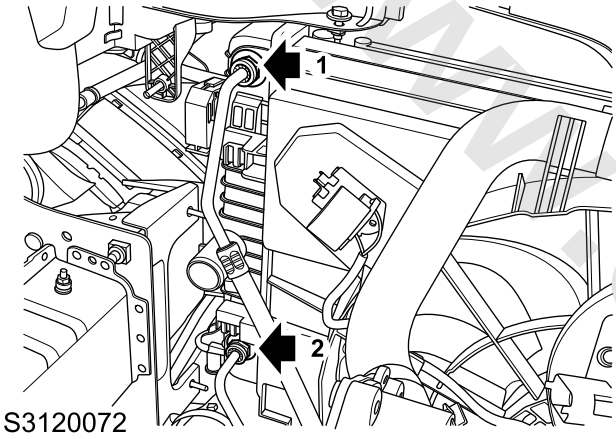

S3120072

5. Remove 1 bolt (1) fixing the transmission inlet hose to the transmission.

Caution: Always fit plugs to open connections to prevent contamination.

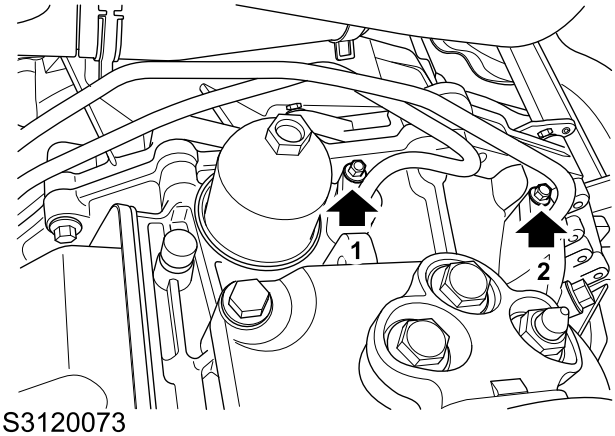

S3120073

6. Remove 1 bolt fixing the transmission inlet hose clip to the transmission.

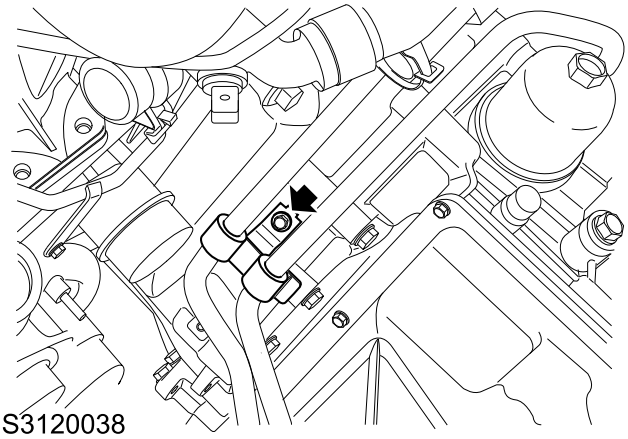
S3120038

7. Remove and discard the O ring of the cooling hose.
8. Remove the transmission inlet hose from the vehicle.

Refit

1. Fit the transmission inlet hose to the vehicle.
2. Lubricate the new O ring with clean transmission fluid and fit it to the inlet cooling hose.
3. Fix the transmission inlet hose clip to the transmission, fit 1 bolt, tighten to **7–10Nm** and check the torque.
4. Fix the transmission inlet hose to the transmission, fit 1 bolt, tighten to **7–10Nm** and check the torque.
5. Fix the transmission inlet hose to radiator connector, fit the clip and secure it.
6. Fit the battery box bracket.

☞ **Battery Box Bracket Refit**

7. Fit the coolant expansion tank.

☞ **Coolant Expansion Tank Refit**

8. Refill automatic transmission fluid

☞ **Transmission Fluid Check and Refill**

www.cargeek.ir

www.cargeek.ir

Thermostat

Remove

1. Disconnect the battery negative.
2. Drain the engine cooling system.

☞ **Engine Cooling System Drain**

3. Release the clamp and disconnect the engine water outlet pipe (1) from the thermostat cover.

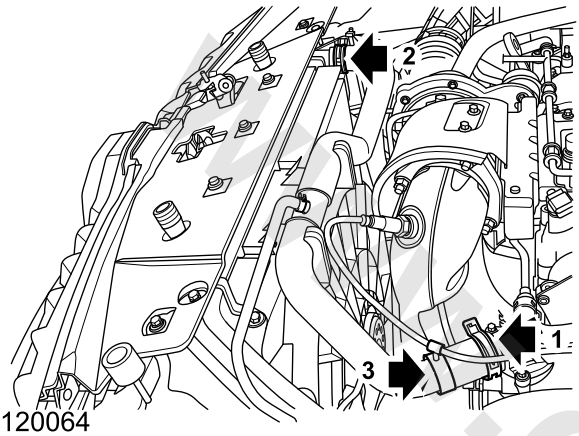

S3120064

4. Release the clamp and disconnect the engine water inlet pipe (1) from the thermostat cover.

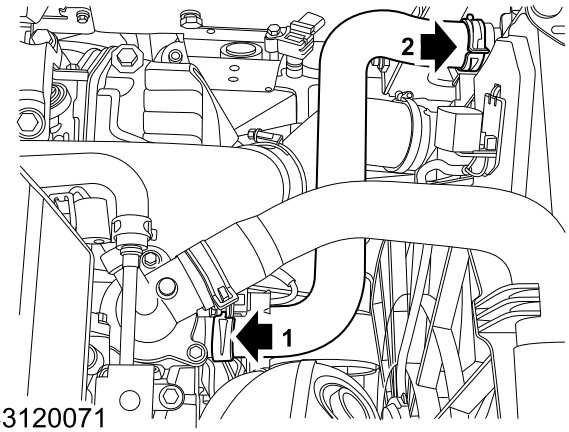

S3120071

5. Disconnect the connector (2) of the electronic thermostat.
6. Release the clamp and disconnect the turbocharger water return pipe (3) from the thermostat cover.
7. Remove 3 bolts (1) fixing the thermostat cover to the thermostat housing.

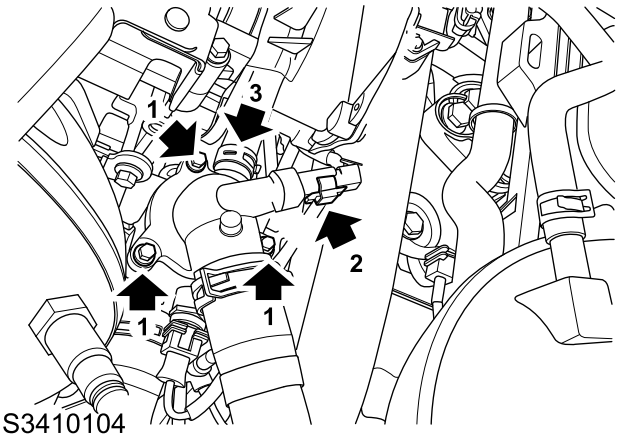

S3410104

8. Remove the thermostat from the vehicle.

Refit

1. Fit the thermostat and ensure the seal ring is properly fitted.
2. Fix the the thermostat cover to the transmission housing, fit 3 bolts, tighten to **9–11Nm**, and check the torque.
3. Connect the thermostat connector.
4. Fix the turbocharger water return pipe to the thermostat cover and secure with clamps.
5. Fix the engine water inlet pipe to the thermostat cover and secure with clamps.
6. Fix the engine water outlet pipe to the thermostat cover and secure with clamps.
7. Refill the engine cooling system.

☞ **Engine Cooling System Refill**

8. Connect the battery negative.

www.cargeek.ir

www.cargeek.ir

Clutch Water Pump

Remove

1. Disconnect the battery negative.
2. Drain the engine cooling system.

☞ **Engine Cooling System Drain**

3. Remove the engine auxiliary drive belt.

☞ **Engine Auxiliary Drive Belt Remove**

4. Remove the oil filter module assembly.

☞ **Oil Filter Module Remove**

5. Remove 4 bolts securing the clutch water pump pulley on the clutch water pump.

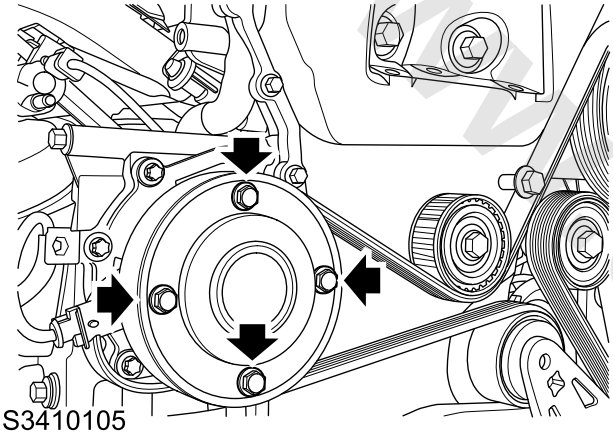

S3410105

6. Remove 6 bolts securing the clutch water pump on the oil cooler module and remove the harness bracket of the clutch water pump connector.

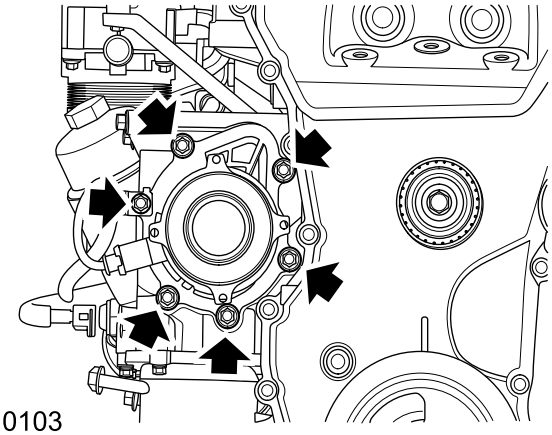

S3410103

7. Remove the clutch water pump from the oil filter module assembly.

Refit

1. Fit the clutch water pump to the oil filter module.
2. Fix the clutch water pump to the oil cooler module, fit the harness bracket of the clutch water pump connector, fit 6 bolts, tighten to **13.5–16.5Nm** and check the torque.
3. Fit the oil filter module.

☞ **Oil Filter Module Refit**

4. Secure the clutch water pump pulley on the clutch water pump, fit 4 bolts, tighten to **7.5-10.4Nm** and check the torque.
5. Fit the engine auxiliary drive belt.

☞ **Engine Auxiliary Drive Belt Refit**

6. Refill the engine cooling system.

☞ **Engine Cooling System Refill**

7. Connect the battery negative.

www.cargeek.ir

Electronic Auxiliary Pump

Remove

1. Disconnect the battery negative.
2. Remove the engine cover.
3. Drain the engine cooling system.

☞ **Engine Cooling System Drain**

4. Remove the battery.

☞ **Battery Remove**

5. Disconnect the connector (1) of the auxiliary electronic water pump.
6. Release the clamp and disconnect the connector (3) of the heater core water inlet pipe and auxiliary electronic water pump.
7. Release the clamp and disconnect the connector (2) of the turbocharger water inlet pipe and auxiliary electronic water pump.

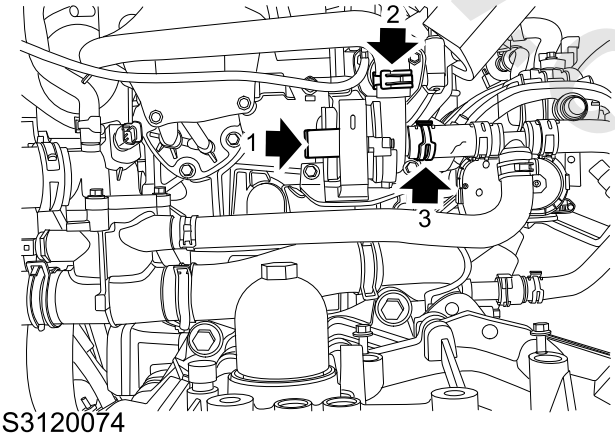

S3120074

8. Release 2 bolts fixing the auxiliary electronic water pump to the engine, and remove the auxiliary electronic water pump.

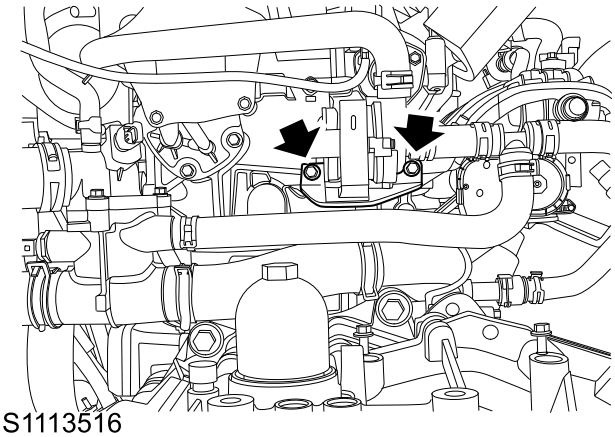
S1113516

Refit

1. Fix the auxiliary electronic water pump and its bracket to the cylinder head, fit 2 bolts, tighten to **9–11Nm** and check the torque.
2. Connect the turbocharger water inlet pipe and auxiliary electronic water pump. and secure with clamps.
3. Connect the heater water inlet pipe and auxiliary electronic water pump. and secure with clamps.
4. Connect the connector of the auxiliary electronic water pump.
5. Fit the battery.

☞ **Battery Refit**

6. Refill the engine cooling system.

☞ **Engine Cooling System Refill**

7. Fit the engine cover.
8. Connect the battery negative.

www.cargeek.ir

Service Procedures-1.5T

Coolant - Drain and Refill

Drain

1. Remove the expansion tank cap.

Warning: Since injury such as scalding could be caused by escaping steam or coolant, do not remove the filler cap from the coolant expansion tank while the system is hot.

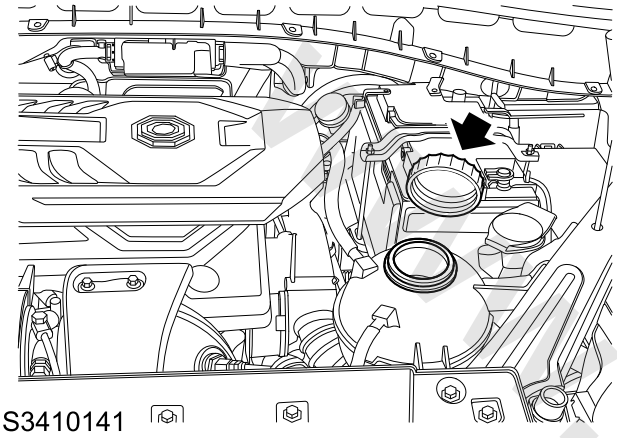

2. Secure a proper container to collect the coolant.
3. Raise the vehicle on an elevator.
4. Open the drain valve at the bottom of the engine cooling system radiator.

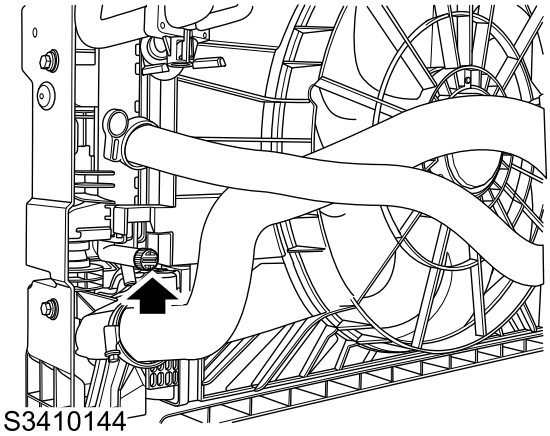

5. Drain the engine cooling system.

Refill

1. Close the coolant drain valve at the bottom of the radiator.
2. Prepare the coolant of specified concentration.

Oil & Fluid

3. Open the expansion tank cap. Refill coolant to the expansion tank until the coolant reaches the expansion tank neck and keeps still.
4. Ensure that the air conditioner is turned off.
5. Start the engine and allow it to operate at the speed of 1500~2500 RPM. Refill the expansion tank as required to keep the level just below the neck of the expansion tank. When the coolant level reaches the neck of the expansion tank due to thermal expansion, screw the expansion tank cap.
6. Continuously run the engine at the speed of 1500~2500 RPM until the cooling fan operates, and then run the engine at idle speed until the cooling fan stops.
7. Turn off the engine and cool it down for 30 minutes.
8. Check the cooling system for leakage.
9. Check the level of coolant whether it is between MIN and MAX. If not, open the expansion tank cap and fill the tank up with coolant or drain the coolant to MAX as required.

www.cargeek.ir

Expansion Tank Cap - Pressure Test

Check

1. Visually check the expansion tank for signs of leakage.
2. Check the hose for signs of rupture and distortion and the attachment strength of pipeline connection.
3. Open the coolant expansion tank cap.

Warning: Since injury such as scalding could be caused by escaping steam or coolant, do not remove the filler cap from the coolant expansion tank while the system is hot.

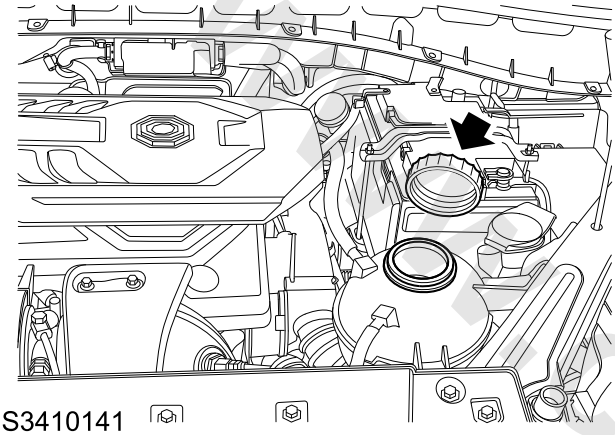

S3410141

4. Fit the **TEN00010** to the expansion tank cap.

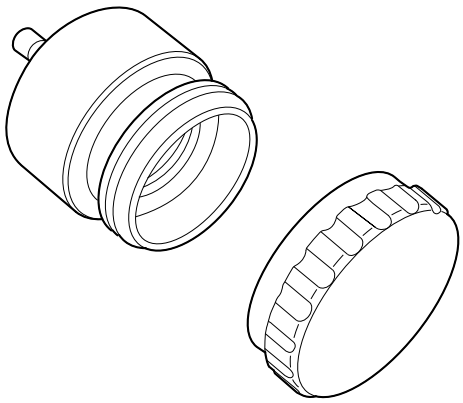

S143049

5. Connect the **T14001** pressure hose to the **TEN00010**.

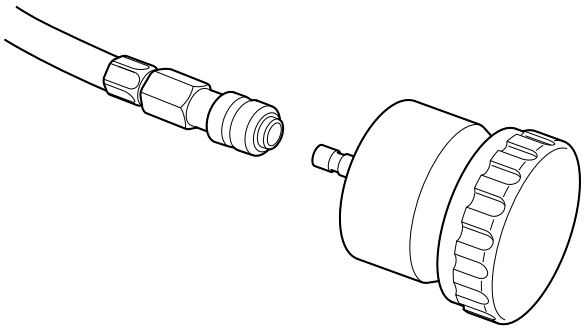

S143047

6. Pressurize the expansion tank cap slowly to the specified pressure, then check the pressure, if the pressure range is maintained within 140-160KPa, the expansion tank lid is normal.
7. Release pressure through the relief valve on the pressurizer.

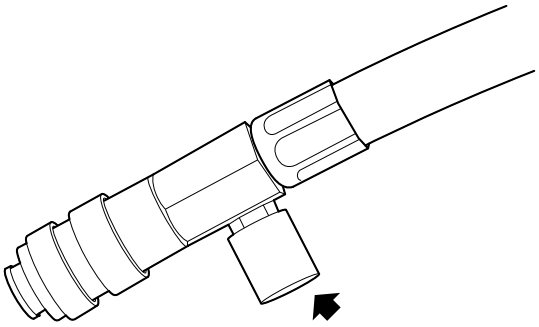

S143048

8. Remove the **T14001** pressure hose from**TEN00010**.
9. Remove the expansion tank cap from the **TEN00010** and fit it to the expansion tank.

www.cargeek.ir

System Pressure Test

Check

1. Check the hose for signs of rupture and distortion and the attachment strength of pipeline connection.
2. Open the coolant expansion tank cap.

Warning: Since injury such as scalding could be caused by escaping steam or coolant, do not remove the filler cap from the coolant expansion tank while the system is hot.

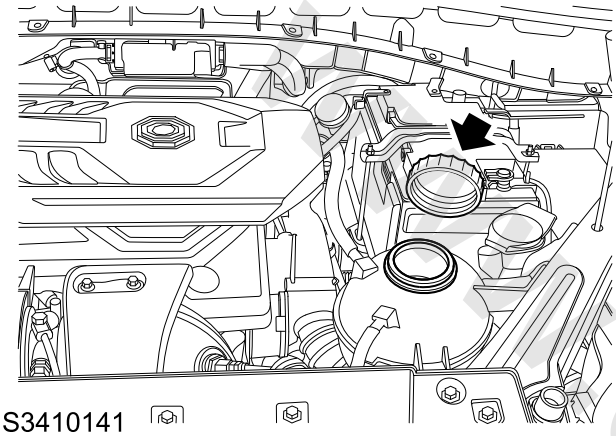

S3410141

3. Fit the **TEN00015** to the expansion tank.
4. Connect the **T14001** pressure hose to the **TEN00015**.
5. Pressurize the system to the pressure of 140-160KPa slowly and check it for leakage.

Warning: Do not exceed the setting pressure value, or the cooling system will be damaged.

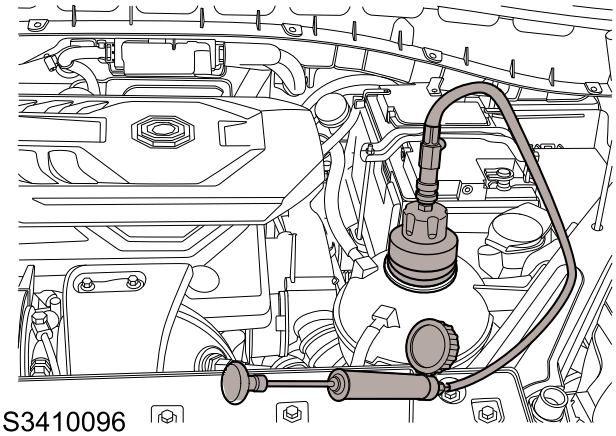

S3410096

6. Visually check the engine and the cooling system for signs of coolant leakage.
7. Release pressure through the relief valve on the **T14001**.

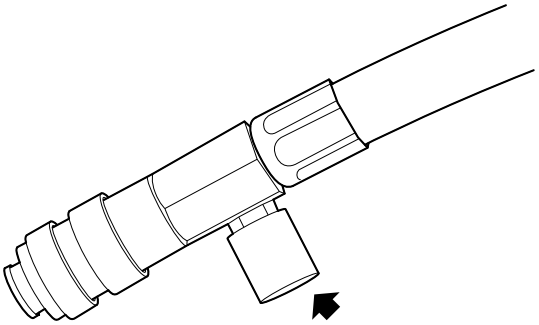

S143048

8. Disconnect the **T14001** hose from **TEN00015**.
9. Remove the **TEN00015** from the expansion tank and fit the expansion tank cap.

Coolant Expansion Tank

Remove

1. Open the coolant expansion tank cap.

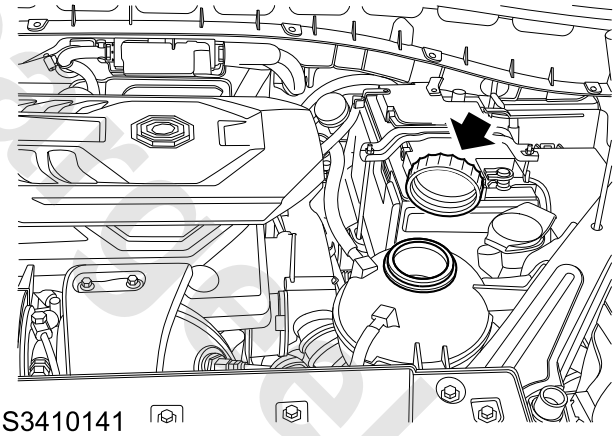

S3410141

2. Remove 2 bolts fixing the coolant expansion tank to the vehicle frame.

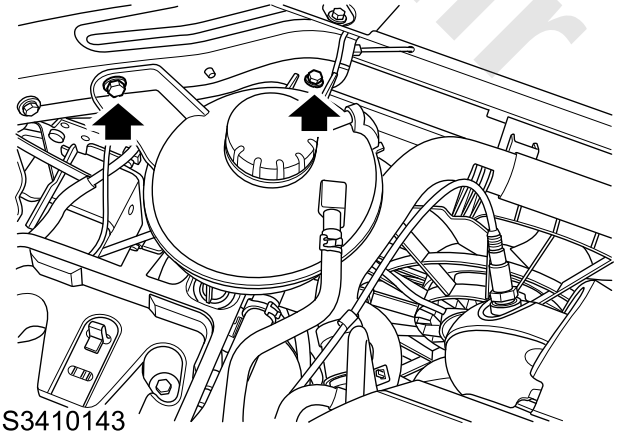

S3410143

3. Place a proper container to collect the coolant overflowing from the expansion tank.
4. Loosen the clamp and disconnect engine overflow hose (1).

www.cargeek.ir

5. Loosen the clamp and disconnect the expansion tank outlet pipe (2).
6. Loosen the clamp and disconnect the cooling system overflow pipe (3).

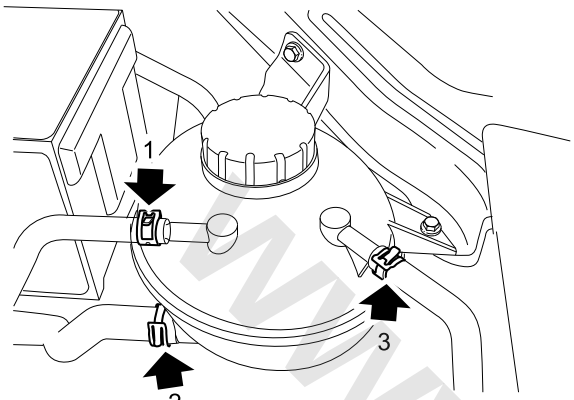

S3410098

7. Clamp the expansion tank with a water pipe clamp to prevent loss of coolant.
8. Remove the coolant expansion tank from the vehicle.

Refit

1. Fix the cooling system overflow pipe to the expansion tank, and fix with clamps.
2. Fit the expansion tank outlet port to coolant expansion tank, and fix with clamps.
3. Fit the engine overflow pipe to the coolant expansion tank and fix with clamps.
4. Fix the coolant expansion tank to the vehicle frame, fit 2 bolts, and tighten to **4–6Nm**.
5. Supplement the coolant to standard level
6. Fit the coolant expansion tank cap.

www.cargeek.ir

www.cargeek.ir

www.cargeek.ir

Radiator Inlet Pipe

Remove

1. Drain the engine cooling system.

☞ **Cooling System Drain**

2. Loosen the clamp, and disconnect the radiator water inlet (1) pipe from the radiator.
3. Loosen the clamp, and disconnect the radiator water inlet pipe (2) from the thermostat housing and remove the radiator water inlet pipe.

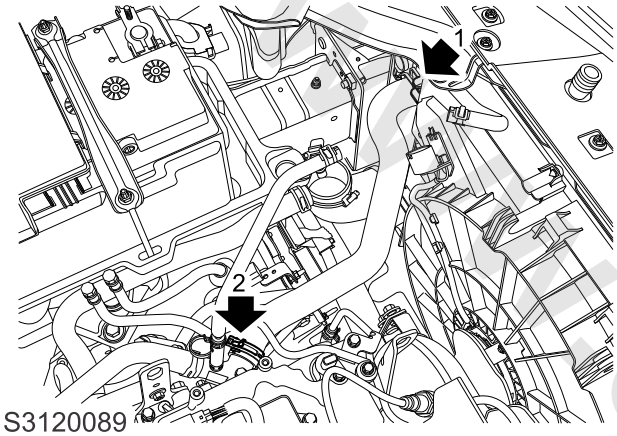

S3120089

Refit

1. Connect the radiator water inlet pipe to the thermostat hard pipe, and fix it with clamps.
2. Connect the radiator water inlet pipe to the radiator, and fix it with clamps.
3. Fill the engine cooling system.

☞ **Engine Cooling System Refill**

Radiator Outlet Pipe

Remove

1. Drain the engine cooling system.

☞ **Engine Cooling System Drain**

2. Remove the 2 bolts fixing the coolant expansion tank to the vehicle frame and the expansion tank.

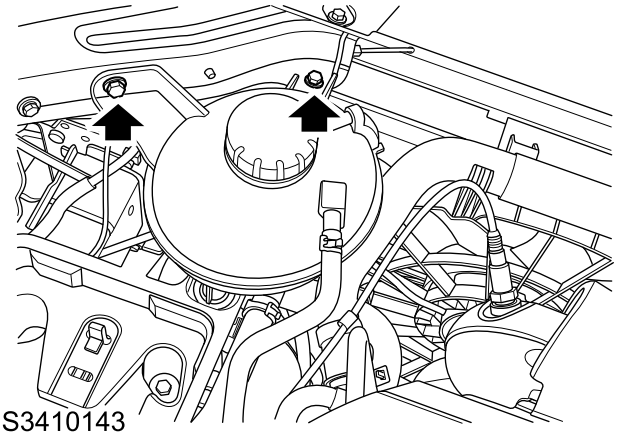
S3410143

3. Loosen the clamp, and disconnect the radiator water outlet hose from the radiator.

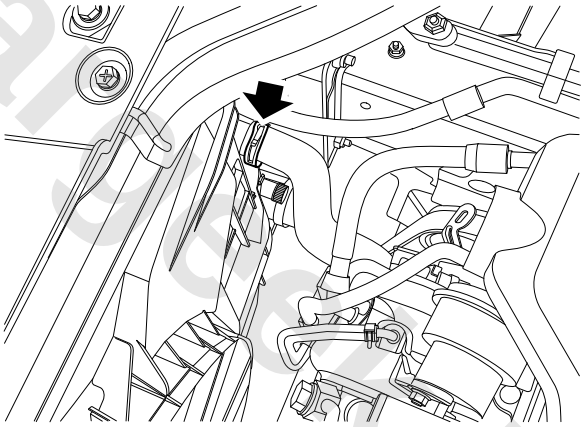
S3120087

4. Loosen the clamp, and disconnect the radiator water outlet hose from the thermostat housing assembly.

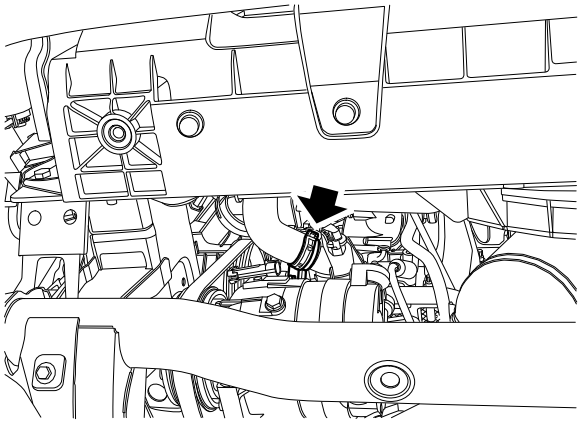
S3120086

5. Remove the radiator water outlet pipe from the vehicle.

www.cargeek.ir

Refit

1. Connect the thermostat water outlet pipe to the thermostat housing assembly and fix it with clamps.
2. Connect the radiator water inlet pipe to the radiator and fix it with clamps.
3. Fix the coolant expansion tank to the vehicle frame; fit two bolts and tighten to **4–6Nm**, then check the torque.
4. Fill the engine cooling system.

☞ **Engine Cooling System Refill**

Heater Water Inlet Pipe

Remove

1. Drain the engine cooling system.

☞ **Cooling System Drain**

2. Remove the electronic throttle air inlet pipe.

☞ **Electronic Throttle Inlet Air Pipe Remove**

3. Loosen the clamp and disconnect the connection (1) between the heater core water inlet pipe and the heater core.

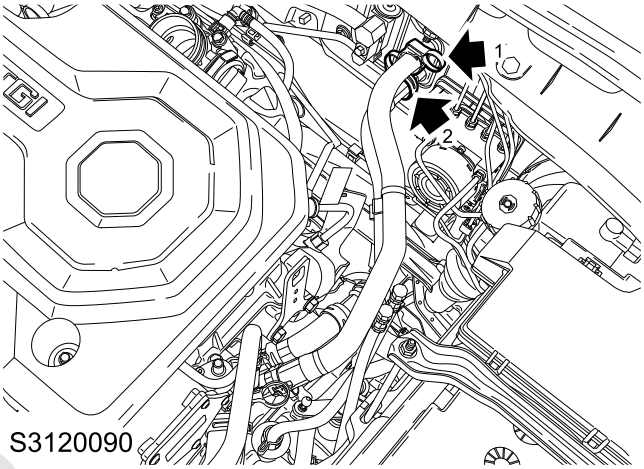

S3120090

4. Loosen the clamp and disconnect the connection (3) between the heater core water inlet pipe and the engine.

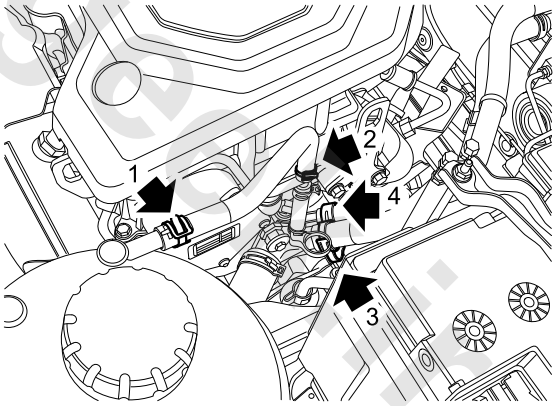

S3120088

5. Remove the heater core water hose inlet from the vehicle.

Refit

1. Fit the heater core water inlet pipe to the vehicle.
2. Fit the heater core water inlet pipe to engine, and fix with clamp.
3. Fit the heater core water inlet pipe to the heater core, and fix with clamp.
4. Fit the electronic throttle air inlet pipe.

☞ **Electronic Throttle Inlet Air Pipe Refit**

5. Fill the engine cooling system.

☞ **Engine Cooling System Refill**

www.cargeek.ir

www.cargeek.ir

Heater Water Outlet Hose

Remove

1. Drain the engine cooling system.

☞ **Cooling System Drain**

2. Remove the electronic throttle air inlet pipe.

☞ **Electronic Throttle Inlet Air Pipe Remove**

3. Loosen the clamp and disconnect the connection (2) between the heater core water outlet pipe and the heater core.

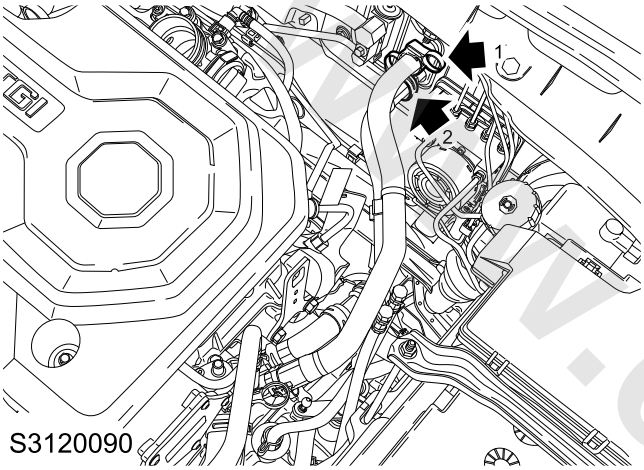

S3120090

4. Loosen the clamp and disconnect the connection (4) between the heater core water outlet pipe and the engine.

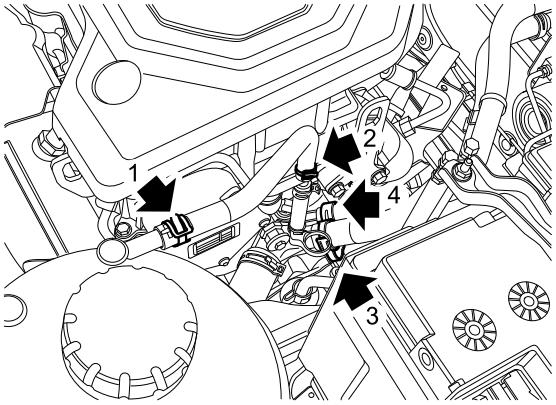

S3120088

5. Loosen the clamp and disconnect the connection (2) between the heater core water outlet pipe and the expansion tank.

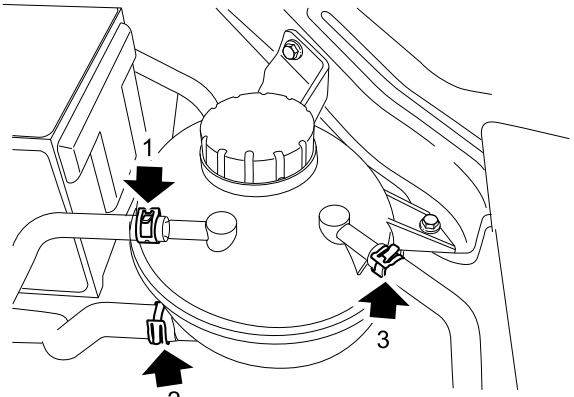

S3410098

6. Remove the heater core water outlet pipe from the vehicle.

Refit

1. Fit the heater core water outlet pipe to the vehicle.
2. Fit the heater core water outlet pipe to expansion tank, and fix with clamp.
3. Fit the heater core water outlet pipe to engine, and fix with clamp.
4. Fit the heater core water outlet pipe to the heater core, and fix with clamps.
5. Fit the electronic throttle air inlet pipe.

☞ **Electronic Throttle Inlet Air Pipe Refit**

6. Fill the engine cooling system.

☞ **Engine Cooling System Refill**

www.cargeek.ir

Engine Overflow Pipe

Remove

1. Loosen the clamp and disconnect the connection (1) between the radiator overflow pipe and the engine.
2. Loosen the clamp and disconnect the connection (2) between the radiator overflow pipe and the expansion tank.

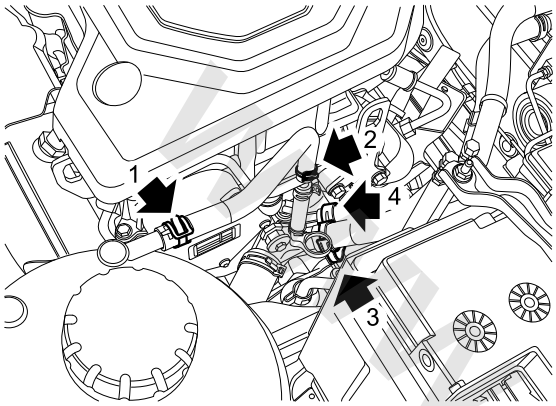

S3120088

3. Remove the engine overflow pipe from the vehicle.

Refit

1. Fit the radiator overflow pipe to the vehicle.
2. Connect the radiator overflow pipe to the radiator and fix it with clamps.
3. Connect the radiator overflow pipe to the expansion tank and fix it with clamps.
4. Check the expansion tank coolant.

Radiator Overflow Pipe

Remove

1. Loosen the clamp, disconnect the connection (2) between the radiator overflow pipe from the radiator.
2. Loosen the clamp, disconnect the connection (1) between the radiator overflow pipe from the expansion tank .

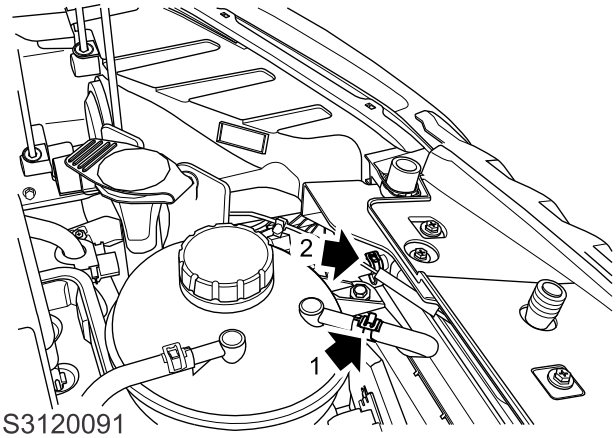

S3120091

3. Remove the radiator overflow pipe from the vehicle.

Refit

1. Fit the radiator overflow pipe to the vehicle.
2. Connect the radiator overflow pipe to the expansion tank, and fix it with clamps.
3. Connect the radiator overflow pipe to the radiator, and fix it with clamps.

www.cargeek.ir

Cooling Fan Assembly

Remove

1. Disconnect the battery negative cable.
2. Disconnect the connector of the cooling fan low speed resistance.

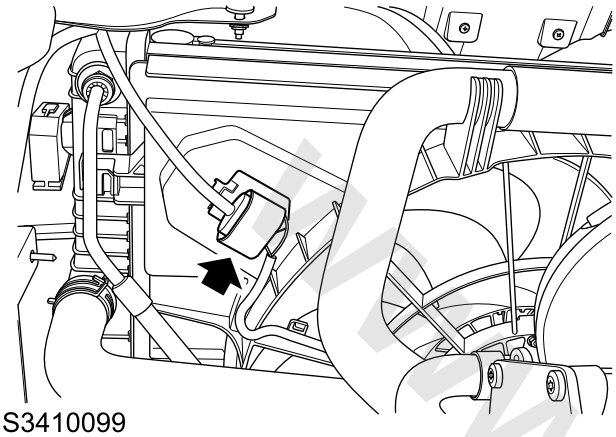

S3410099

3. Remove the front bumper.

Front Bumper Remove

4. Loose 6 bolt (1) and 2 nuts (2) fixing the front anti-collision beam.

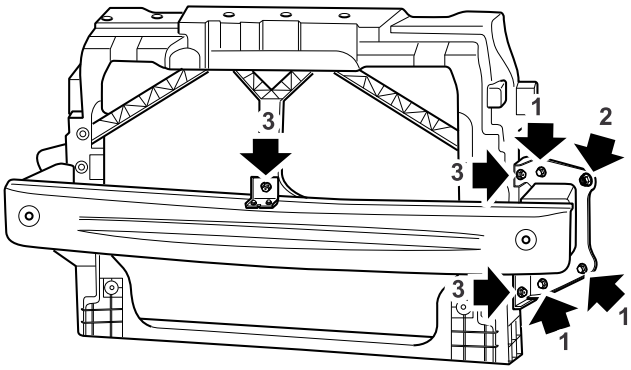

S6213006

5. Loose 2 bolts and 2 lock catches fixing the cooling fan assembly to radiator.

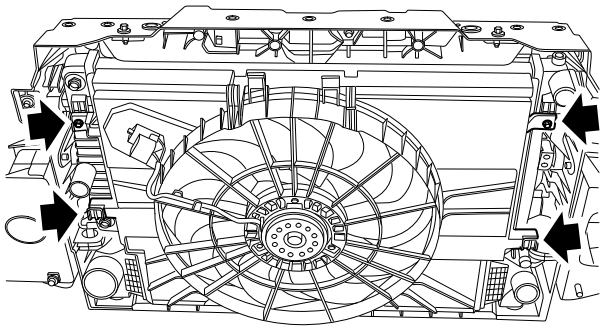

S3410100

6. Raise the vehicle on an elevator.
7. Move the cooling fan assembly slowly in the engine compartment and remove it from the vehicle.

Refit

1. Fit the fan assembly to the vehicle.
2. Lower the vehicle.
3. Fix the cooling fan to the slot of the upper radiator beam; fit 2 screws, tighten to **4.5-5Nm**, and check the torque.
4. Fix the front buffer beam and the upper radiator beam assembly to the vehicles, respectively connect with bolts and nuts and tighten to **40–50Nm**.
5. Fit the front bumper.

Front Bumper Refit

6. Disconnect the connector of the cooling fan low speed resistor.
7. Connect the battery negative cable.

www.cargeek.ir

www.cargeek.ir

Coolant Fan Low Speed Resistor

Remove

1. Disconnect the battery negative cable.
2. Remove the cooling fan assembly.

☞ **Cooling Fan Assembly Remove**

3. Remove 1 screw securing the resistance on the wind scooper to remove the resistance.

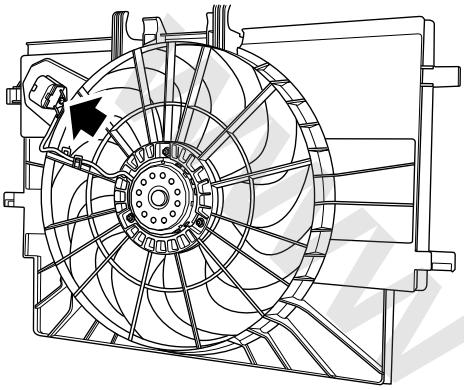

S3410101

4. Measure about 5 cm lead at resistor end and cut the resistor off the lead.
5. After cutting off the resistor, remove about 7 mm insulation respectively from both ends of the remaining lead.

Refit

1. Take a resistance to be fitted and cover the heat-shrink tubes on the leads of resistance.

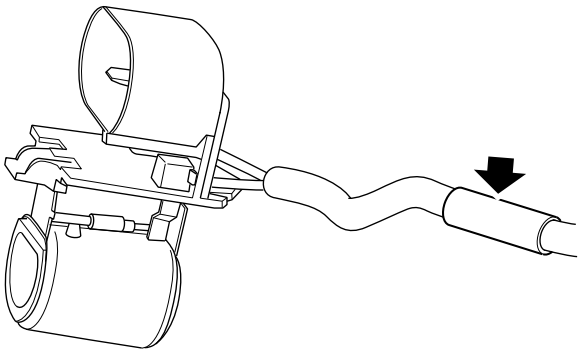

S3410124

2. Insert the metal part of the lead whose insulation has been removed into the double end connector connected to the lead of the resistance to be fitted, and impact it with the terminal clamp in **T84001**, taking the standard of at least 10 kg tensional of the joint without loosing.
3. Cover the heat-shrink tubes on the double end connector and heat it with proper heat supply to shrink and agglutinate it with the lead.
4. Fix the resistance and to the wind protection ring; fix and tighten 1 self-tapping screws, and fix the lead well with tapes to ensure no displacement of the lead and the serpentuator sleeve, otherwise, it will or may interfere the blade.
5. Fit the cooling fan assembly.

☞ **Cooling Fan Assembly Refit**

6. After replacement, connect the accumulator negative and start up the engine to check its operation. If there is no high humming when the fan is running, then resume the low speed operating condition.

www.cargeek.ir

Radiator Assembly

Remove

1. Disconnect the battery negative cable.
2. Drain the engine cooling system.

Engine Cooling System Drain

3. Remove coolant expansion tank

Expansion Tank Remove

4. Remove the front bumper.

Front Bumper Remove

5. Loosen the clamp, and disconnect the radiator water inlet pipe.
6. Loosen the clamp, and disconnect the radiator water outlet pipe.
7. Remove the cooling fan assembly.

Cooling Fan Assembly Remove

8. Remove the upper radiator beam.

Upper Radiator Beam Remove

9. Remove the intercooler from the radiator slot.
10. Remove radiator assembly from the vehicle.

Refit

1. Fit the radiator to the vehicle.
2. Fit the intercooler into the radiator slot.
3. Fit the upper radiator beam.

Upper Radiator Beam Refit

4. Fit the cooling fan assembly.

Cooling Fan Assembly Refit

5. Fit the radiator water inlet pipe.
6. Fit the radiator water outlet pipe.
7. Fit the front bumper.

Front Bumper Refit

8. Fit the coolant expansion tank.

Coolant Expansion Tank Refit

9. Fill the engine cooling system.

Engine Cooling System Refill

10. Connect the battery negative cable.

1.5T Intercooler

Remove

1. Disconnect the battery negative cable.
2. Remove the bottom deflector.

Bottom Deflector Remove

3. Remove the front bumper.

Front Bumper Remove

4. Remove the cooling fan assembly.

Cooling Fan Assembly Remove

5. Loosen the clamps, and disconnect the intercooler air inlet hose from the inter cooler.

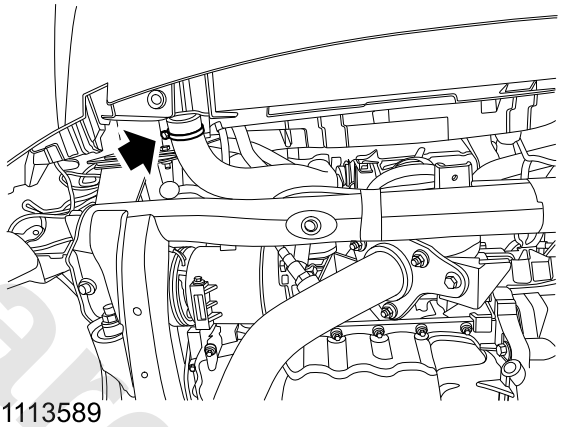

S1113589

6. Loosen the clamps, and disconnect the connection (3) between intercooler air outlet hose from the inter cooler.

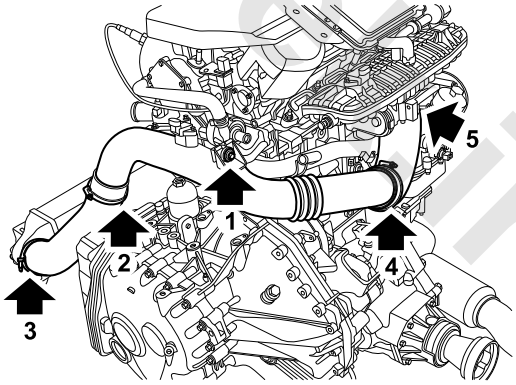

S1113588

7. Remove 2 bolts and 2 screws connecting the upper radiator beam, radiator and inter cooling.

www.cargeek.ir

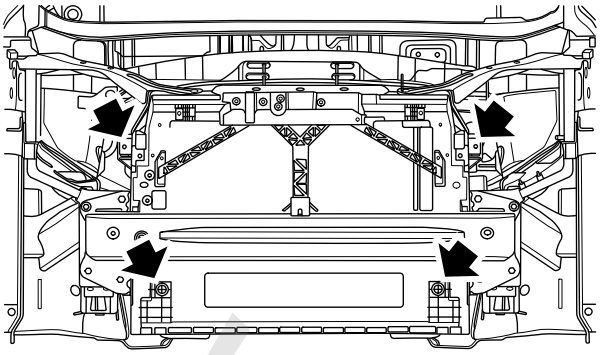

S5113004

8. Loosen 6 bolts (1) and 2 nuts (2) fixing the buffer beam to the body.

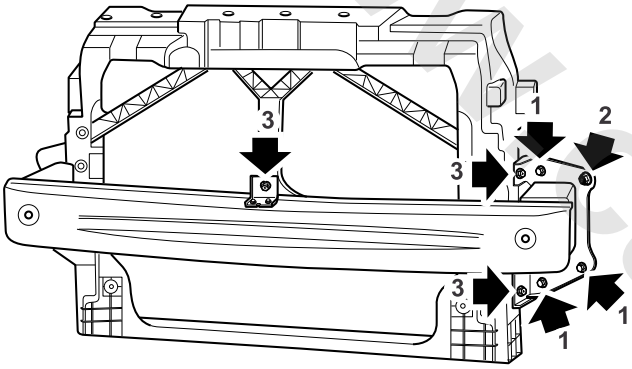

S6213006

9. Raise the vehicle on an elevator.
10. Remove the intercooler from the slot of the upper radiator beam and take out from the vehicle.

Refit

1. Fit the intercooler to the slot of the upper radiator beam.
2. Lower the vehicle.
3. Tighten the front anti-collision beam bolt to **40–50Nm**, and check the torque.
4. Fit the intercooler and the radiator to the slot of the upper radiator beam; fit 2 bolts and screws and tighten to **4–6Nm**, and check the torque.
5. Fit the intercooler air inlet hose to the intercooler, and fix it with clamps.
6. Fit the intercooler air inlet hose to the turbocharger, and fix it with clamps.
7. Fit the cooling fan assembly.

Cooling Fan Assembly Refit

8. Fit the front bumper.

Front Bumper Refit

9. Fit bottom air deflector.

Bottom Deflector Refit

10. Connect the battery negative cable.

www.cargeek.ir

Radiator Airflow Side Deflector - Left Upper

Remove

1. Remove the front bumper assembly.

☞ **Front Bumper Assembly Remove**

2. Remove 1 bolt (1) fixing the left upper radiator airflow deflector to the body.
3. Remove 2 clips (2) fixing the left upper radiator airflow deflector to the left lower radiator airflow side deflector.

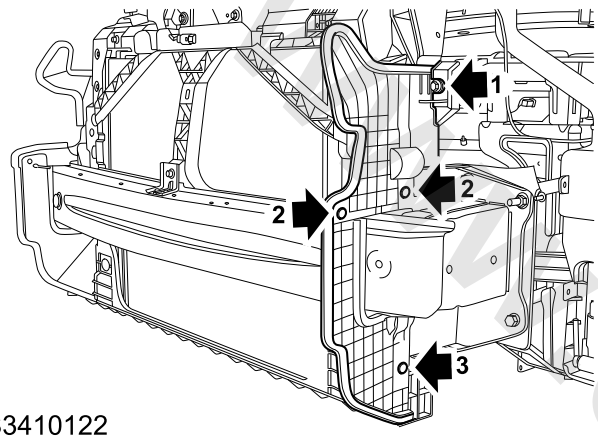

S3410122

4. Remove the left upper radiator airflow side radiator deflector from the vehicle.

Refit

1. Fit the left upper radiator airflow deflector to the vehicle.
2. Fix the left upper radiator airflow deflector to the left lower radiator airflow deflector and tighten with clip.
3. Fix the left upper radiator airflow deflector to the body, fit 1 bolts, and tighten to **3–5Nm**.
4. Fit front bumper assembly.

☞ **Front Bumper Assembly Refit**

Radiator Airflow Side Deflector - Left Lower

Remove

1. Remove the front bumper assembly.

☞ **Front Bumper Assembly Remove**

2. Remove 3 clips (2), (3) fixing the left lower radiator airflow deflector to the left upper radiator airflow deflector and the upper radiator beam.

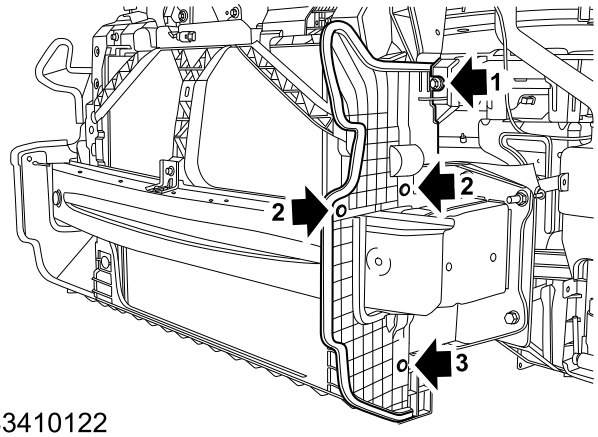

S3410122

3. Remove the left upper radiator airflow side radiator deflector from the vehicle.

Refit

1. Fit the left lower radiator airflow deflector to the vehicle.
2. Fix the left lower radiator airflow deflector to the left upper radiator airflow deflector and upper radiator beam and tighten with clip.
3. Fit front bumper assembly.

☞ **Front Bumper Assembly Refit**

www.cargeek.ir

www.cargeek.ir

Radiator Airflow Side Deflector - Right Upper

Remove

1. Remove the front bumper assembly.

☞ **Front Bumper Assembly Remove**

2. Unscrew 3 split pins fixing the air filter inlet pipe and remove the air filter inlet pipe.

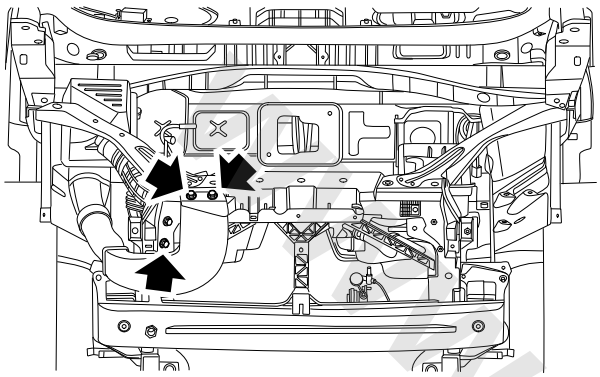

S5113001

3. Fix the right upper radiator airflow deflector to the body, and fit 1 bolt (1).
4. Fix the right upper radiator airflow deflector to the left lower air filter inlet pipe, and fit 2 clips (2).

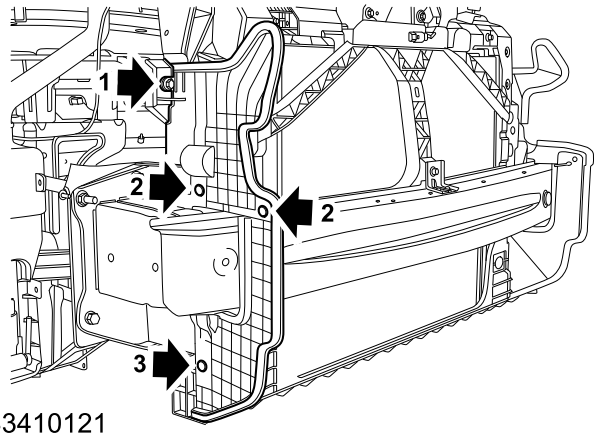

S3410121

5. Remove the left upper radiator airflow side radiator deflector from the vehicle.

Refit

1. Fit the right upper radiator airflow deflector to the vehicle.
2. Fix the right upper radiator airflow deflector to the right lower radiator airflow deflector and tighten with clips.
3. Fix the right upper radiator airflow deflector to the body, fit 1 bolt, and tighten to **3–5Nm**.
4. Fit the air filter inlet pipe.
5. Fit front bumper assembly.

☞ **Front Bumper Assembly Refit**

Radiator Airflow Side Deflector - Right Lower

Remove

1. Remove the front bumper assembly.

☞ **Front Bumper Assembly Remove**

2. Remove 3 clips (2), (3) fixing the right lower radiator airflow deflector to the right upper radiator airflow deflector and the upper radiator beam.

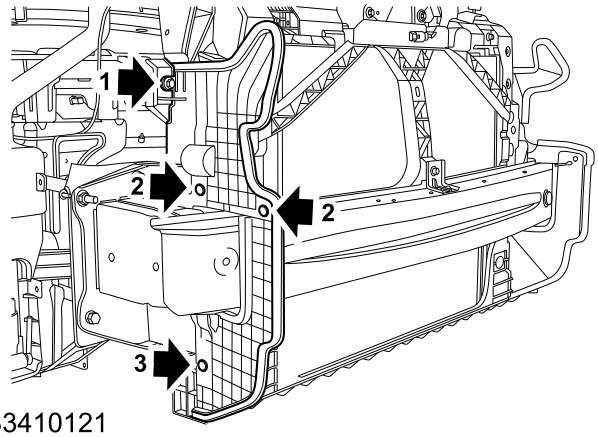

S3410121

3. Remove the left lower radiator airflow side deflector from the vehicle.

Refit

1. Fit the right lower radiator airflow deflector to the vehicle.
2. Fix the right lower radiator airflow deflector to the right upper radiator airflow deflector and upper radiator beam, and fit clip and tighten up.
3. Fit front bumper assembly.

☞ **Front Bumper Assembly Refit**

www.cargeek.ir

www.cargeek.ir

Thermostat

Remove

1. Disconnect the battery negative cable.
2. Drain the engine coolant.

Engine Cooling System Drain

3. Remove the bottom deflector.

Bottom Deflector Remove

4. Disconnect the electronic thermostat connector.
5. Loosen the clamp, and disconnect the radiator water outlet pipe from the thermostat.
6. Remove 2 bolts fixing the thermostat housing to the water pump.
7. Remove the thermostat, and discard the gasket.

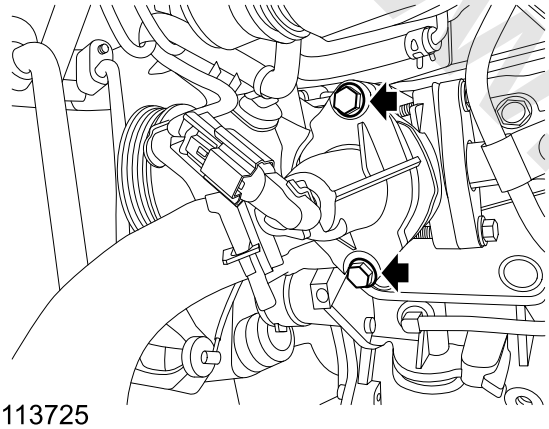

S1113725

Refit

1. Clean the junction surface between thermostat and water pump, and ensure that there is no foreign material.
2. Fit a new gasket, fix the thermostat to the water pump, fit 2 bolts, tighten to **8-12Nm**, and check the torque.
3. Connect the thermostat water outlet pipe to the thermostat, and fix it with clamps.
4. Connect the electronic thermostat connector.
5. Fit the bottom deflector.

Bottom Deflector Refit

6. Fill the engine coolant.

Engine Cooling System Refill

7. Connect the battery negative cable.

Mechanical Water Pump

Remove

1. Drain the engine cooling system.

Engine Cooling System Drain

2. Drain engine oil.

Engine Oil Drain

3. Remove the auxiliary drive belt.

Auxiliary Drive Belt Remove

4. Remove the oil cooler.

Oil Cooler Remove

5. Remove the turbocharger water inlet pipe.

Turbocharger Water Inlet Pipe Remove

6. Loosen the clamp, and disconnect the bypass pipe (3) from the water outlet assembly.
7. Loosen the clamp, and disconnect the bypass pipe from the turbocharger water return pipe (1).
8. Remove 2 bolts (2) fixing the bypass pipe to the water pump.

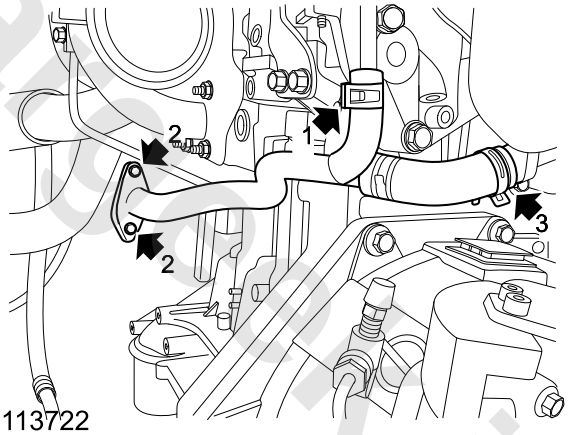

S1113722

9. Remove 1 bolt fixing the bypass pipe to the engine, remove the bypass pipe, and discard the sealing gasket.
10. Disconnect electronic thermostat connector (2), remove the harness staple bolt (3), and remove the harness.
11. Loosen the clamp, and disconnect the hose from the thermostat housing (1).

www.cargeek.ir

www.cargeek.ir

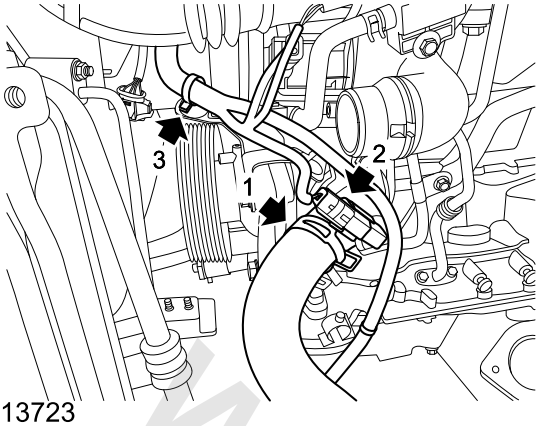

S1113723

12. Remove 2 bolts fixing the water pump to the engine, remove the water pump, and discard the sealing gasket.

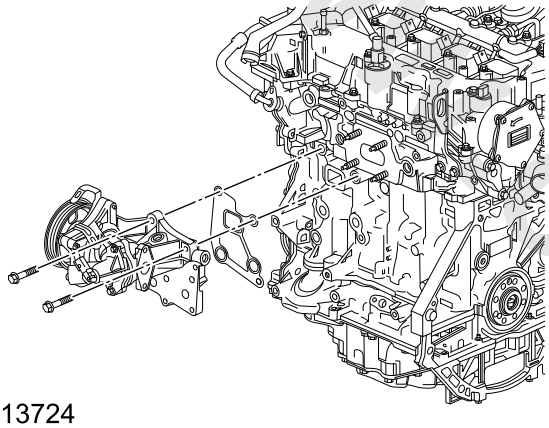

S1113724

Refit

1. Clean the junction surface between the water pump and the alternator, and ensure that there is no foreign material.
2. Fix the water pump to the engine, fit 2 bolts, tighten to **22-28Nm**, and check the torque.
3. Connect the hose to the thermostat housing and fix it with clamps.
4. Connect the electronic thermostat connector, and fix the harness.
5. Fit a new gasket; fix the bypass pipe to the water pump, fit 2 bolts and tighten to **8-12Nm**; check the torque.
6. Fix the bypass pipe to the engine; fit 1 bolt and tighten to**8-12Nm**; check the torque.
7. Connect the bypass pipe to the water outlet assembly, and fix it with clamps.
8. Connect the bypass pipe to the turbocharger water return pipe, and fix it with clamps.
9. Fit the turbocharger water inlet pipe.

☞**Turbocharger Water Inlet Pipe Refit**

10. Fit the oil cooler.

☞**Oil Cooler Refit**

11. Fill the engine oil.

☞**Engine Oil Refill**

12. Refit the auxiliary drive belt

☞**Auxiliary Drive Belt Refit**

13. Fill the engine cooling system.

☞**Engine Cooling System Refill**

www.cargeek.ir

www.cargeek.ir

Special Tools

Tool Number	Description	Picture
TEN00010	Pressure test connector, cap	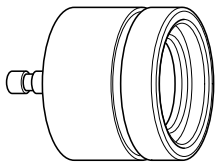 TEN00010
T14001	Cooling system pressure test kit	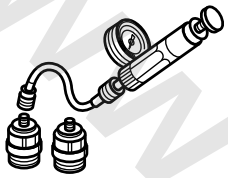 T14001
TEN00015	Pressure test connector, cooling system	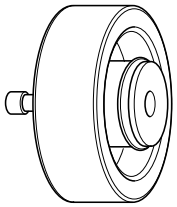 TEN00015
T84001	Harness repair kit	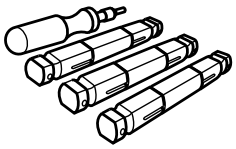 T84001

www.cargeek.ir

www.cargeek.ir

Engine Fuel & Management System

Specifications

Torque

Description	Value
Fuel tank unit locking ring	75–85Nm
Bolt - fuel tank strap	22–28Nm
Bolt - fuel filler to body	5–7Nm
Nut - fuel filter to filter support bracket	7–10Nm

www.cargeek.ir

www.cargeek.ir

Description and Operation

System Layout

Fuel System Layout - 2WD

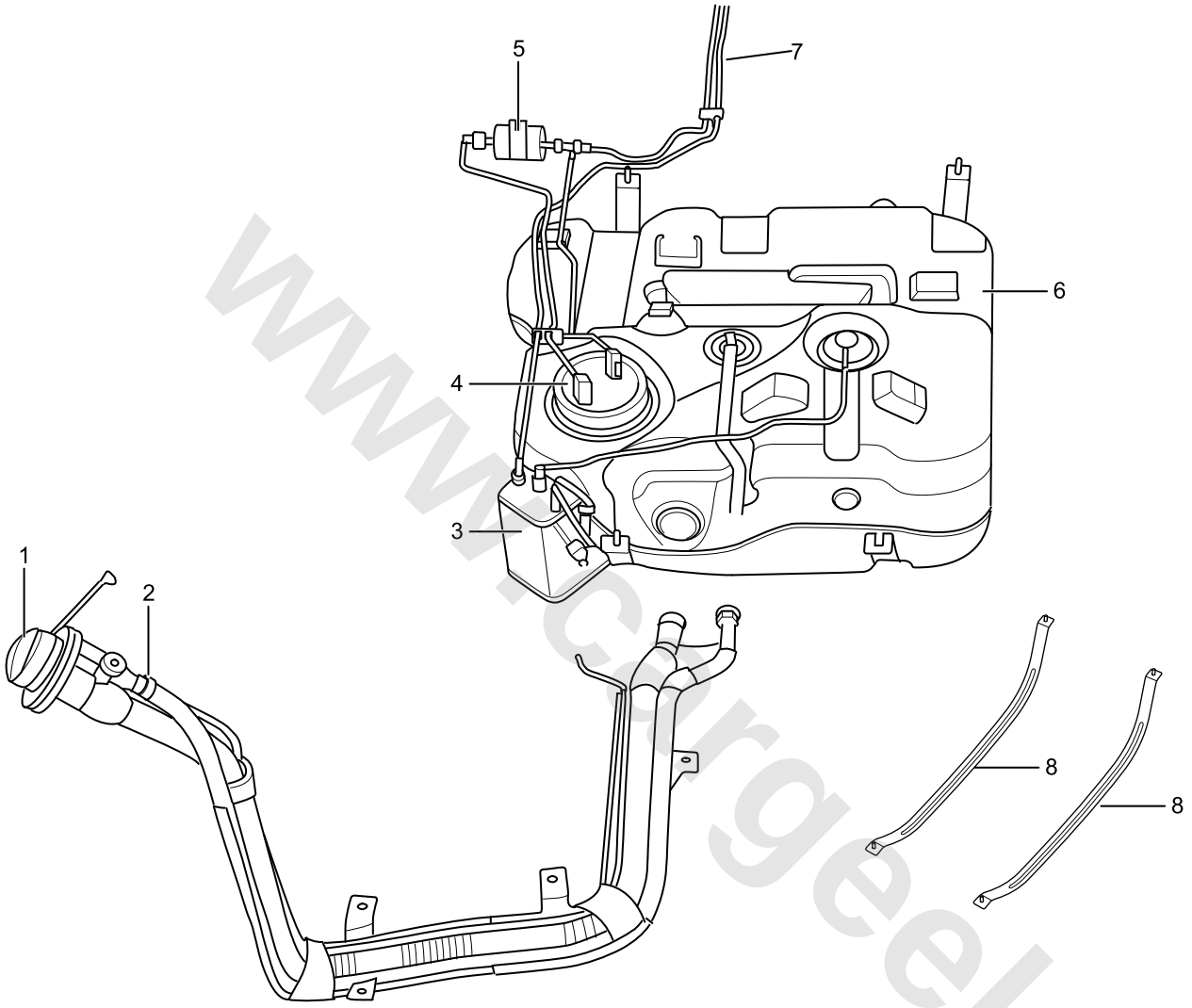

S9510001

1. Fuel Cap
2. Fuel Filler Pipe
3. Canister
4. Fuel Pump
5. Filter
6. Fuel Tank
7. Underfloor Fuel Pipe
8. Fuel Tank Strap

www.cargeek.ir

www.cargeek.ir

Fuel System Layout - AWD

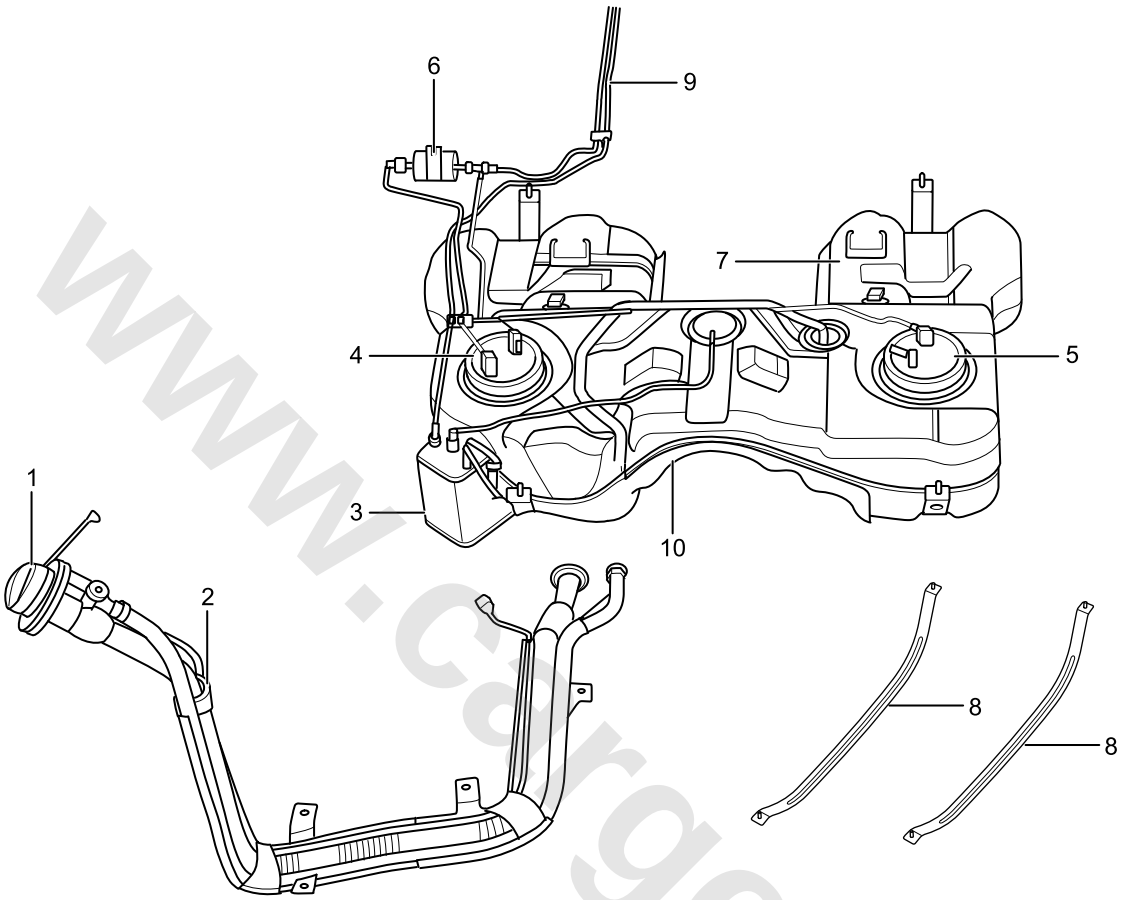

S9510002

1. Fuel Cap
2. Fuel Filler Pipe
3. Canister
4. Primary Fuel Pump
5. Secondary Fuel Pump
6. Filter
7. Fuel Tank
8. Fuel Tank Strap
9. Underfloor Fuel Pipe Assembly
10. Fuel Tank Heat Shield

www.cargeek.ir

www.cargeek.ir

Description

Fuel System

Fuel system is a loop-free and multi-point injection system which is equipped with electromechanical fuel injectors. The fuel drawn from the fuel tank is delivered to the fuel filter outside the fuel tank. Then, the fuel is transmitted to the engine high-pressure fuel pump through a single fuel pipe.

ECM communicates with the following components of the fuel system:

- Fuel Pump
- Fuel Level Sensing Unit
- Canister Control Valve

The fuel tank includes a fuel level sensing unit connected with the IPK. The instrument pack uses hybrid algorithm to measure the fuel in the fuel tank accurately.

Electric Fuel Pump

The electric fuel pump transfers the fuel from fuel tank to the engine and provides sufficient fuel pressure and fuel. The fuel pump is located in the fuel tank, which soaks in the fuel and applies fuel to dissipate heat and lubricate. The battery supplies power for the electric fuel pump via the fuel pump relay which connects the electric fuel pump only when the power is on and the engine operates. When the engine stops due to accident, the fuel pump will stop automatically.

Evaporative Emission System

The evaporative emission system prevents the fuel evaporative emission from entering into the air. The system contains a canister filled with activated carbon particles, when the vehicle is not in use, it can absorb hydrocarbon vapors. The canister is near the left rear wheel. The pipeline connects to the fuel tank (air space above the fuel) and the canister. The capacity of the canister pipe is limited, therefore, when the engine is running, purification is achieved by sucking the fuel vapor into the cylinder. A pipe connects to the canister and the intake manifold via the canister control valve. During ventilation, a pipe is connected to the canister.

www.cargeek.ir

www.cargeek.ir

www.cargeek.ir

Service Procedures

Canister

Remove

1. Raise the vehicle on a lift.
2. Pull the canister up from the fuel tank, and take away the canister (1).

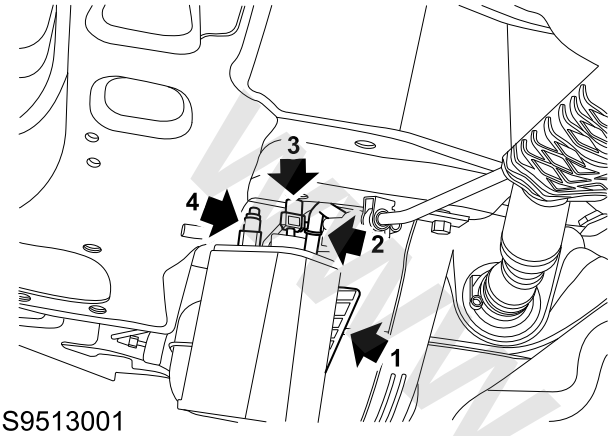

S9513001

3. Disconnect the vent hose (2) from the canister.
4. Disconnect the fuel tank hose (3) from the canister.
5. Disconnect the canister solenoid valve hose (4) from the canister.
6. Remove the canister.

Caution: Always fit plugs to open connections to prevent contamination.

Refit

1. Make sure all hose connections are clean.
2. Connect the fuel tank hose, canister solenoid hose and vent hose to the canister.
3. Fit the canister to the fuel tank groove.
4. Lower the vehicle.

Underfloor Fuel Pipe - 2.0T

Remove

1. Disconnect the battery negative cable.

Warning: Fuel vapour is highly flammable and in confined spaces is also explosive and toxic. Always have a fire extinguisher containing foam, CO2, gas or powder close

2. Release the pressure of fuel system.

☞ **Fuel System – Pressure Release**

3. Disconnect the canister breather hose from the canister solenoid valve.

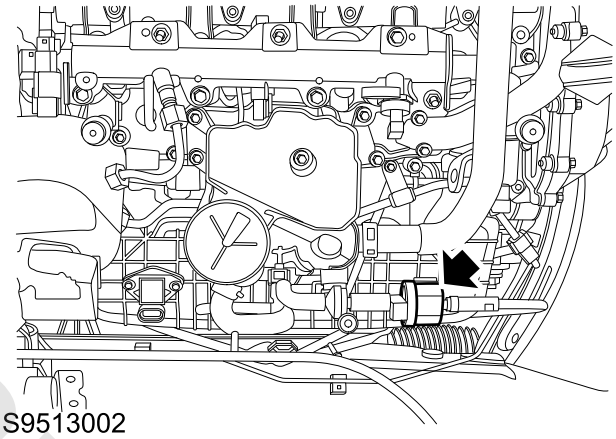

S9513002

4. Raise the vehicle on a lift.
5. Disconnect the rubber fuel pipe and fuel inlet hose.

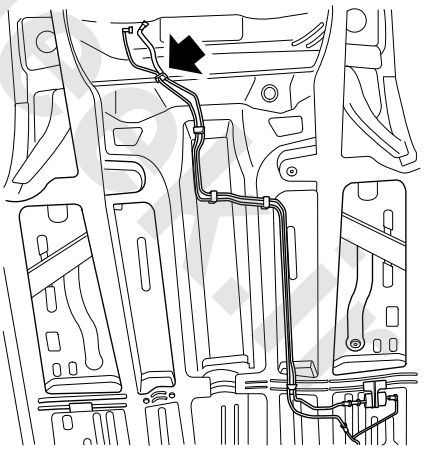

S9513003

6. Disconnect the fuel pipe under the floor from the canister.
7. Disconnect the fuel pipe under the floor from the filter.
8. Loosen the clip fixing the underfloor fuel pipe assembly to the underbody.
9. Remove the underfloor fuel pipe assembly.

Refit

1. Fix the underfloor fuel pipe to the underbody.
2. Fit the clip of the underfloor fuel pipe.
3. Connect the underfloor fuel pipe and fuel filter.
4. Connect the underfloor fuel pipe and and canister.

www.cargeek.ir

5. Connect the fuel inlet hose to the rubber fuel pipe.
6. Lower the vehicle.
7. Connect the canister vent hose to the canister solenoid.
8. Connect the battery cable.

Underfloor Fuel Pipe-1.5T

Remove

1. Disconnect the battery negative cable.

Warning: Fuel vapour is highly flammable and in confined spaces is also explosive and toxic. Always have a fire extinguisher containing foam, CO2, gas or powder close

2. Release the pressure of the fuel system.

Fuel System – Pressure Release

3. Disconnect the connector (2) of the solenoid valve.
4. Disconnect the connection (1) between carbon breathing hose and the canister solenoid.

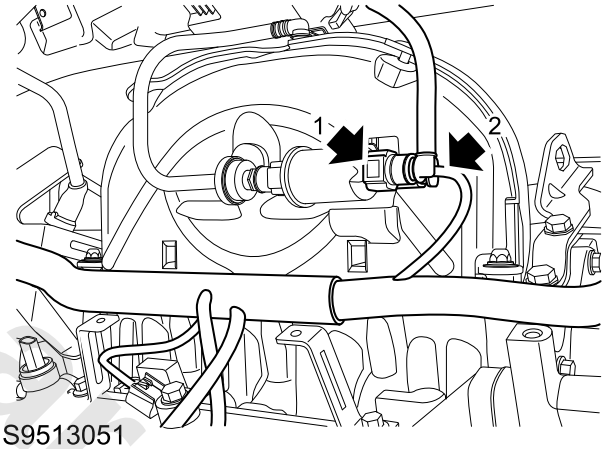

S9513051

5. Disconnect the fuel inlet hose from the high pressure fuel pump.

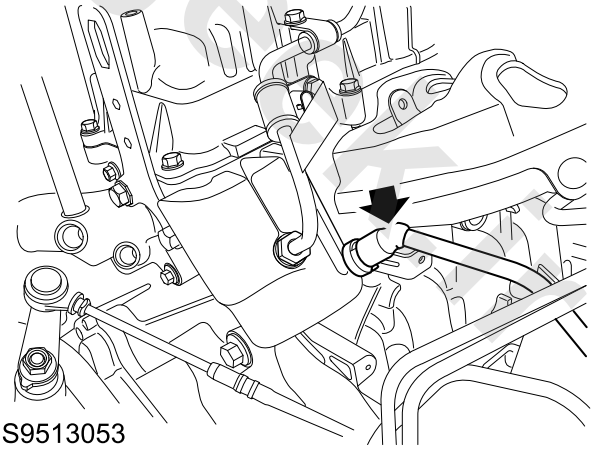

S9513053

6. Raise the vehicle on an elevator.
7. Disconnect the connector (4) between fuel pipe and carbon tank.

www.cargeek.ir

www.cargeek.ir

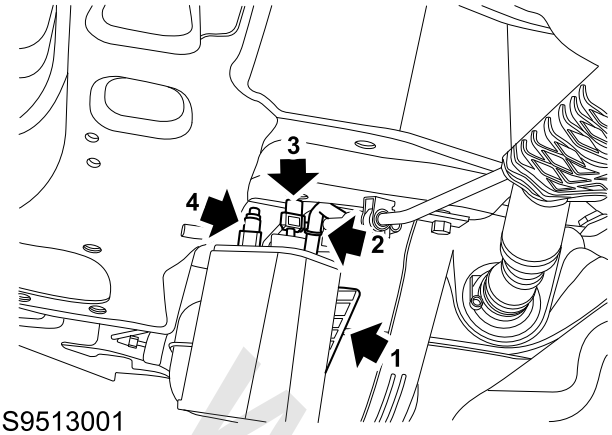

S9513001

8. Disconnect the fuel pipe from the fuel filter.

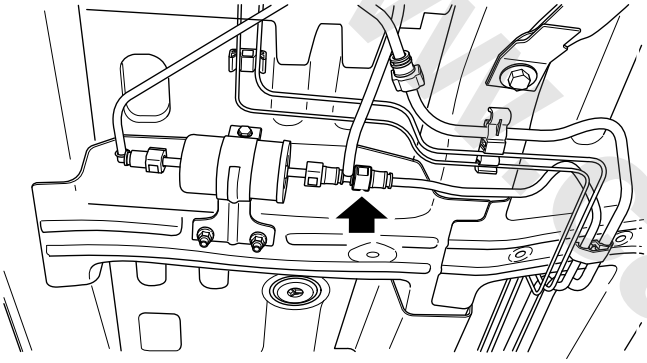

S9513054

9. Loosen clamp fixing the underfloor fuel pipe assembly to the underbody and remove it.

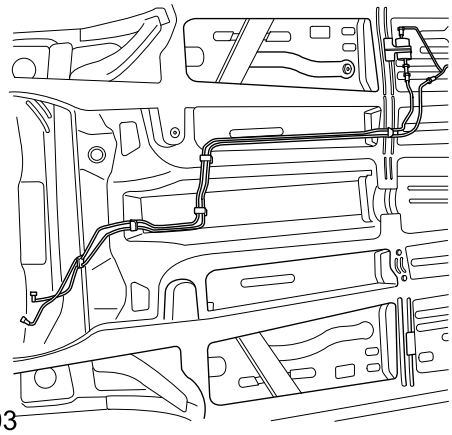

S9513003

Refit

1. Fix the underfloor fuel pipe to chassis, and secure with clamp.
2. Connect the fuel pipe and the filter.
3. Connect the fuel pipe and the fuel filter.
4. Connect the fuel pipe and the canister.
5. Lower the vehicle.
6. Connect the canister breathing hose to the canister solenoid.
7. Connect the canister solenoid valve connector.
8. Connect the fuel inlet hose to the high-pressure fuel pump.
9. Connect the battery negative cable.

www.cargeek.ir

Rubber Fuel Pipe

Remove

1. Disconnect the battery negative cable.

Warning: Fuel vapour is highly flammable and in confined spaces is also explosive and toxic. Always have a fire extinguisher containing foam, CO2, gas or powder close

2. Release the pressure of fuel system.

Fuel System – Pressure Release

3. Remove the clip on the fuel pipe bracket.
4. Disconnect the rubber fuel pipe and engine high-pressure fuel pump.
5. Raise the vehicle on a lift.
6. Release the clip fixing the fuel pipe under the floor and rubber fuel pipe.

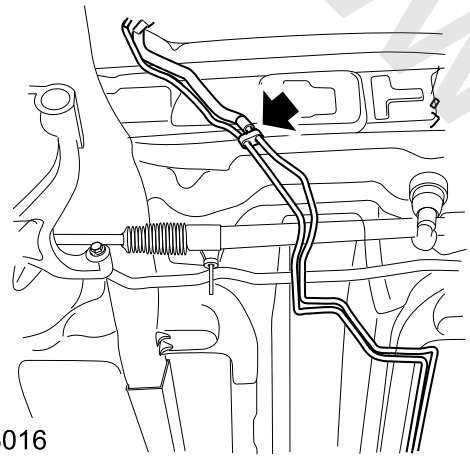

S9513016

7. Disconnect the rubber fuel pipe and fuel inlet hose.
8. Remove the rubber fuel pipe.

Refit

1. Connect the rubber fuel pipe and fuel inlet hose.
2. Fit the clips fixing the underfloor fuel pipeline and rubber fuel pipe.
3. Lower the vehicle.
4. Connect the rubber fuel pipe and engine high-pressure oil pump.
5. Fit the clips fixed on the fuel pipe bracket.
6. Connect the battery cable.

Fuel Tank Heat Shield - AWD

Remove

1. Raise the vehicle.
2. Remove the intermediate exhaust pipe.

Intermediate Exhaust Pipe Remove

3. Remove the drive shaft.

Drive Shaft Remove

4. Remove the screw fixing the heat shield of the fuel tank to the fuel tank.

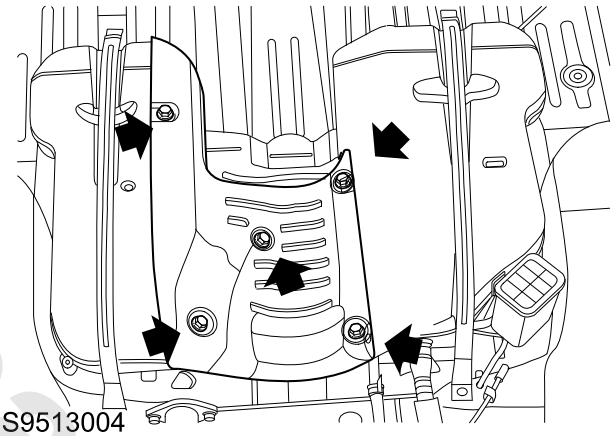

S9513004

5. Remove the heat shield of the fuel tank.

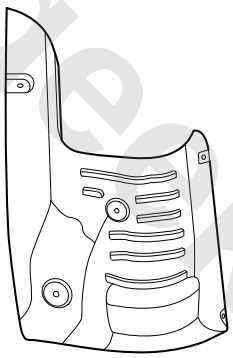

S9513005

Refit

1. Fit the fuel tank heat shield on the fuel tank.
2. Fit the drive shaft.

Drive Shaft Refit

3. Fit the middle part of exhaust pipe.

Exhaust Pipe Middle Part Refit

4. Lower the vehicle.

www.cargeek.ir

Fuel Tank - 2WD

Remove

1. Disconnect the battery negative cable.

Warning: Fuel vapour is highly flammable and in confined spaces is also explosive and toxic. Always have a fire extinguisher containing foam, CO2, gas or powder close

2. Release the pressure of fuel system.

☞ **Fuel System – Pressure Release**

3. Drain the fuel system.

☞ **Fuel Tank – Drain**

4. Remove the canister.

☞ **Canister Remove**

5. Loosen and discard clamps between the fuel tank filling hose and the fuel tank, and take away the hose.

Warning: The spilling of fuel is unavoidable during this operation. Ensure that all necessary precautions are taken to prevent fire and explosion.

6. Support the fuel tank securely.
7. Remove 4 bolts fixing the steel strip of the fuel tank to the body, and take away the steel strip. Lower the fuel tank to access the top of the fuel tank.

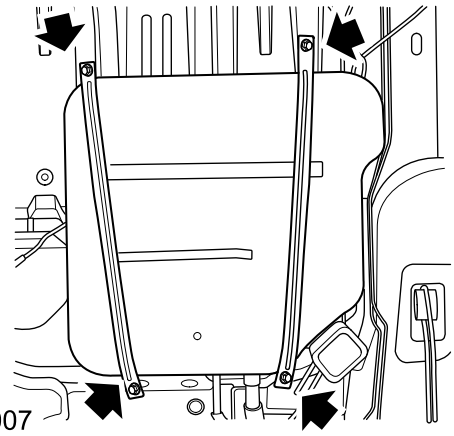

S9513007

8. Lower the fuel tank.
9. Disconnect the fuel supply pipe (1) and return pipe (2) between the fuel pump and the fuel filter from the fuel pump.
10. Disconnect the connector (3) of fuel pump.

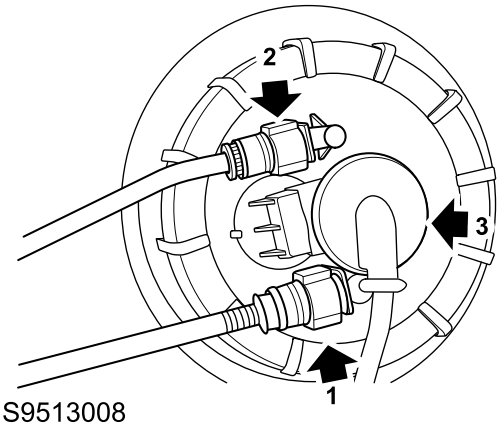

S9513008

11. Remove the fuel tank. Remove the fuel pump first if necessary.
    a. Release and remove the lock ring of the fuel pump with the **T18007**.
    b. Take out the fuel pump unit with care and discard the seal.

Refit

1. Fit a new seal to fuel tank and fit fuel pump, and take care not to damage the seal.
2. Fit fuel pump lock ring with **T18007**, and tighten it to **75–85Nm**.
3. Support the fuel tank securely with assistance.
4. Connect it to the connector of the fuel pump.
5. Connect the fuel supply pipe and fuel return pipe between the fuel pump and the fuel filter.
6. Lift the fuel tank.

Caution: Take care not to trap any pipes or cables when fitting fuel tank.

7. Raise the fuel tank assembly with a lift to the place beneath the floor of the vehicle body seat, align the steel strip fitting hole end to the vehicle welding nut hole, fit with the fitting bolt and tighten it to **22–28Nm**.
8. Connect fuel filler pipe to the fuel tank, fit the hose connecting the fuel filler pipe and the fuel tank and secure it with new clamps.
9. Connect the fuel supply pipe and fuel return pipe between the fuel pump and the fuel filter.
10. Fit the canister.

☞ **Canister Refit**

11. Lower the vehicle.
12. Refill the fuel tank.
13. Connect the battery negative cable.

www.cargeek.ir

Fuel Tank - AWD

Remove

1. Disconnect the battery negative cable.

Warning: Fuel vapour is highly flammable and in confined spaces is also explosive and toxic. Always have a fire extinguisher containing foam, CO2, gas or powder close

2. Release the pressure of fuel system.

Fuel System – Pressure Release

3. Drain the fuel system.

Fuel Tank – Drain

4. Remove the heat shield of the fuel tank.

Fuel Tank Heat Shield Remove

5. Remove the canister.

Canister Remove

6. Loosen and discard clamps between the fuel tank filling hose and the fuel tank, and take away the hose.

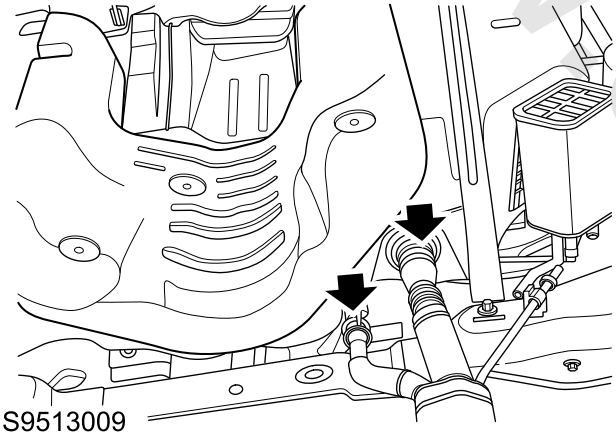

S9513009

Warning: The spilling of fuel is unavoidable during this operation. Ensure that all necessary precautions are taken to prevent fire and explosion.

7. Support the fuel tank securely.
8. Remove 4 bolts fixing the steel strip of the fuel tank to the body, and take away the steel strip. Lower the fuel tank to access the top of the fuel tank.

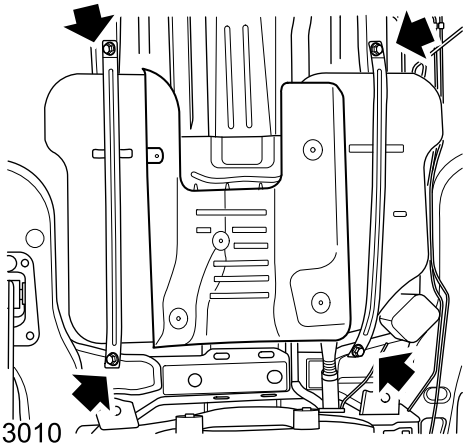

S9513010

9. Lower the fuel tank.
10. Disconnect the fuel supply pipe (1) and return pipe (2) between the fuel pump and the fuel filter from the fuel pump.
11. Disconnect the connector (3) of fuel pump.

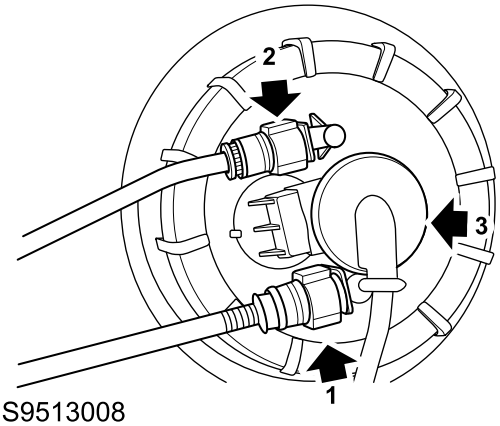

S9513008

12. Remove the fuel tank. Remove the fuel pump first if necessary.
    a. Release and remove the lock ring of the fuel pump with the **T18007**.
    b. Take out the fuel pump unit with care and discard the seal.

Refit

1. Fit a new seal to fuel tank and fit fuel pump, and take care not to damage the seal.
2. Fit fuel pump lock ring with the **T18007**, and tighten it to **75–85Nm**.
3. Support the fuel tank securely with assistance.
4. Connect it to the connector of the fuel pump.
5. Connect the fuel supply pipe and fuel return pipe between the fuel pump and the fuel filter.
6. Lift the fuel tank.

Caution: Take care not to trap any pipes or cables when fitting fuel tank.

7. With a lift, raise the fuel tank assembly to the location beneath the floor of the body seat, align the steel strip mounting hole with the welding nut hole on the body, fit it with bolts and tighten to **22–28Nm**.
8. Connect fuel filler pipe to the fuel tank, fit the hose connecting the fuel filler pipe and the fuel tank and secure it with new clamps.
9. Fit the canister.

Canister Refit

10. Fit the heat shield of the fuel tank.

Fuel Tank Heat Shield Refit

11. Lower the vehicle.
12. Refill the fuel tank.

www.cargeek.ir

www.cargeek.ir

13. Connect the battery negative cable.

Fuel Pump - 2WD

Remove

1. Disconnect the battery negative cable.

Warning: Fuel vapour is highly flammable and in confined spaces is also explosive and toxic. Always have a fire extinguisher containing foam, CO2, gas or powder close

Warning: The spilling of fuel is unavoidable during this operation. Ensure that all necessary precautions are taken to prevent fire and explosion.

2. Release the pressure of fuel system.

☞ **Fuel System – Pressure Release**

3. Remove the left rear seat.

☞ **Rear Seat Remove**

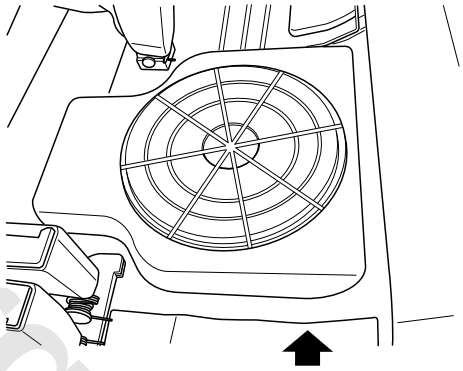

4. Pry the closing plate open with a screwdriver.
5. Cover the surrounding areas to prevent the overflow of fuel.
6. Release the fuel supply pipe (1) and fuel return pipe (2) from the fuel pump.
7. Disconnect the connector (3) of the fuel pump.

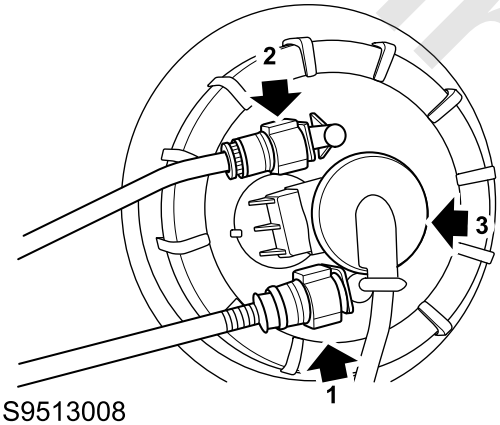

S9513008

Caution: Before disconnecting any part of the fuel system, it is imperative that all dust, dirt and debris is removed from around components to prevent ingress of foreign matter into fuel system.

www.cargeek.ir

www.cargeek.ir

Warning: The spilling of fuel is unavoidable during this operation. Ensure that all necessary precautions are taken to prevent fire and explosion.

8. Release and remove the lock ring of the fuel pump with the **T18007**.
9. Take out the fuel pump unit with care and discard the seal.

Refit

1. Fit a new seal to the fuel tank and fit the fuel pump. Take care not to damage the seal.
2. Fit the fuel pump lock ring with the **T18007**, and tighten it to **75–85Nm**.
3. Connect the fuel supply pipe and fuel return pipe to the fuel pump connector.
4. Connect the connector of fuel pump.
5. Stick the closing plate with glue.
6. Restore the sound insulation material and carpet to their original positions.
7. Fit the rear seat.

☞ **Rear Seat Refit**

8. Connect the battery negative cable.

Fuel Pump - AWD

Remove

1. Disconnect the battery negative cable.

Warning: Fuel vapour is highly flammable and in confined spaces is also explosive and toxic. Always have a fire extinguisher containing foam, CO2, gas or powder close

Warning: The spilling of fuel is unavoidable during this operation. Ensure that all necessary precautions are taken to prevent fire and explosion.

2. Release the pressure of fuel system.

☞ **Fuel System – Pressure Release**

3. Remove the left rear seat.

☞ **Rear Seat Remove**

4. Pry the closing plate open with a screwdriver.
5. Cover the surrounding areas to prevent the overflow of fuel.
6. Release the fuel supply pipe (1) and fuel return pipe (2) from the primary fuel pump.
7. Disconnect the connector (3) of the primary fuel pump.

Caution: Before disconnecting any part of the fuel system, it is imperative that all dust, dirt and debris is removed from around components to prevent ingress of foreign matter into fuel system.

Warning: The spilling of fuel is unavoidable during this operation. Ensure that all necessary precautions are taken to prevent fire and explosion.

8. Release and remove the lock ring of the primary fuel pump with the **T18007**.
9. Take out the primary fuel pump unit with care and discard the seal.
10. Remove the right rear seat.

☞ **Rear Seat Remove**

11. Open the closing plate with a screwdriver.
12. Cover the surrounding areas to prevent overflow of the fuel.
13. Release the fuel supply pipe (1) and fuel return pipe (2) from the secondary fuel pump.
14. Disconnect the connector (3) of the secondary fuel pump.

Caution: Before disconnecting any part of the fuel system, it is imperative that all dust, dirt and debris is removed from around components to prevent ingress of foreign matter into fuel system.

Warning: The spilling of fuel is unavoidable during this operation. Ensure that all necessary precautions are taken to prevent fire and explosion.

15. Release and remove the lock ring of the secondary fuel pump with the **T18007**.

www.cargeek.ir

www.cargeek.ir

16. Take out the secondary fuel pump unit with care and discard the seal.

Refit

1. Fit a new seal to the fuel tank, fit the primary/secondary fuel pumps, and take care not to damage the seal.
2. Fit fuel pump lock ring with the **T18007**, and tighten it to **75–85Nm**.
3. Connect the fuel supply pipe and fuel return pipe to the connector of the primary/secondary fuel pumps.
4. Connect the connector of primary/secondary fuel pumps.
5. Stick the closing plate with glue.
6. Restore the sound insulation material and carpet to their original positions.
7. Fit the rear seat.

☞ **Rear Seat Refit**

8. Connect the battery negative cable.

Fuel System - Pressure Release - 2.0T

Check

1. Release the fuel filler cap to release the vapor pressure of the fuel tank.

Warning: Fuel vapour is highly flammable and in confined spaces is also explosive and toxic. Always have a fire extinguisher containing foam, CO2, gas or powder close

2. Remove the fuel pump fuse from the engine compartment fuse box.
3. Place the ignition switch in "ON" position, and keep the engine at idle mode until the engine stalls.
4. Place the ignition switch in "OFF" position, and restart the engine with the ignition key (10 seconds), then confirm if there is any fuel.
5. Secure the fuel filler cap.

www.cargeek.ir

www.cargeek.ir

www.cargeek.ir

Fuel System - Pressure Release-1.5T

Check

1. Release the fuel filler cap to release the steam pressure in the fuel tank.

Warning: Fuel vapour is highly flammable and in confined spaces is also explosive and toxic. Always have a fire extinguisher containing foam, CO2, gas or powder close

2. Remove fuel pump fuse from the engine compartment fuse box.
3. Place the ignition switch to ON position and keep the engine idle until the engine stops.
4. Place the ignition switch to OFF position, start the engine with the ignition key and keep for 10s to confirm that the engine has no fuel.
5. Fix the fuel filler cap.

Fuel System - Pressure Test - 2.0T

Check

1. Place an absorptive cloth around the high-pressure fuel pump, low-pressure fuel pipe and the interface of the underfloor fuel pipe to collect the spilled fuel.

Warning: Fuel vapour is highly flammable and in confined spaces is also explosive and toxic. Always have a fire extinguisher containing foam, CO2, gas or powder close

Warning: The spilling of fuel is unavoidable during this operation. Ensure that all necessary precautions are taken to prevent fire and explosion.

2. Disconnect the high-pressure fuel pump, low-pressure fuel pipe and fuel supply pipe.

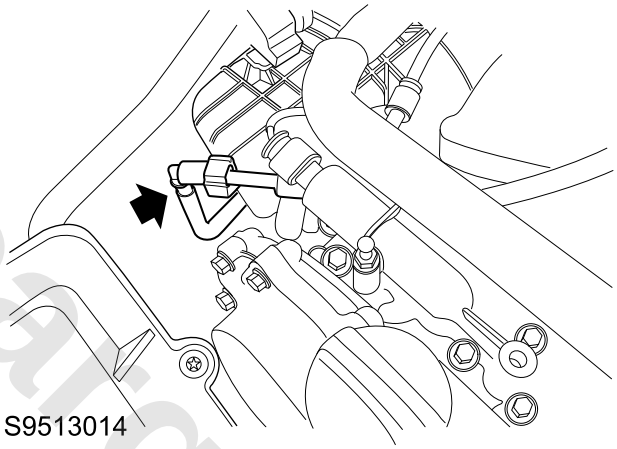

S9513014

3. Connect the connector of the high-pressure fuel pump, low-pressure fuel pipe and fuel supply pipe to the quick connector of the **TCH00106**.
4. Fix the **TCH00106** to the **T18002** of the fuel pressure gauge.

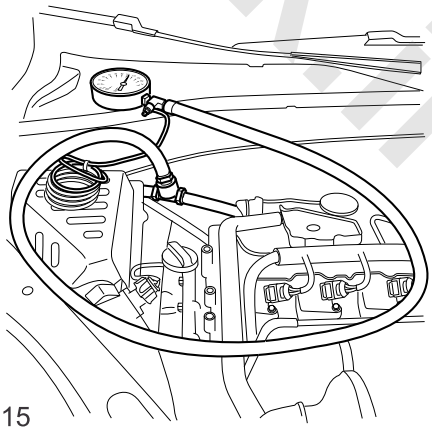

S9513015

5. Start the engine to allow the fuel pump to work, observe the readings on the fuel pressure gauge within 1 minute, if the readings are within the range of 3.5-3.9bar, the fuel system is in normal state.
6. Stop the engine to disenable the fuel pump, if the system pressure is below 2bar after 20 minutes, there is something wrong with the pressure maintaining

www.cargeek.ir

performance of the system. In this case, check if the pressure regulating valve of the fuel pump can work properly.

7. Disconnect the high-pressure fuel pump, low-pressure fuel pipe and fuel supply pipe from the **TCH00106**.
8. Drain the fuel residue in the tool into the container.
9. Connect the high-pressure fuel pump, low-pressure fuel pipe and fuel supply pipe.

Fuel System - Pressure Test - 1.5T

Check

1. Place cloths with strong absorptivity around the joint of high-pressure fuel pump low-pressure fuel pipe and underfloor fuel pipe to collect the overflowing fuel.

Warning: Fuel vapour is highly flammable and in confined spaces is also explosive and toxic. Always have a fire extinguisher containing foam, CO2, gas or powder close

Warning: The spilling of fuel is unavoidable during this operation. Ensure that all necessary precautions are taken to prevent fire and explosion.

2. Disconnect the high-pressure fuel pump low-pressure fuel pipe from fuel supply pipe.
3. Respectively connect the high-pressure fuel pump low-pressure fuel pipe and underfloor fuel pipe to the master cylinder of **TCH00107**.
4. Fix **TCH00107** to the fuel pressure gauge **T18002**.

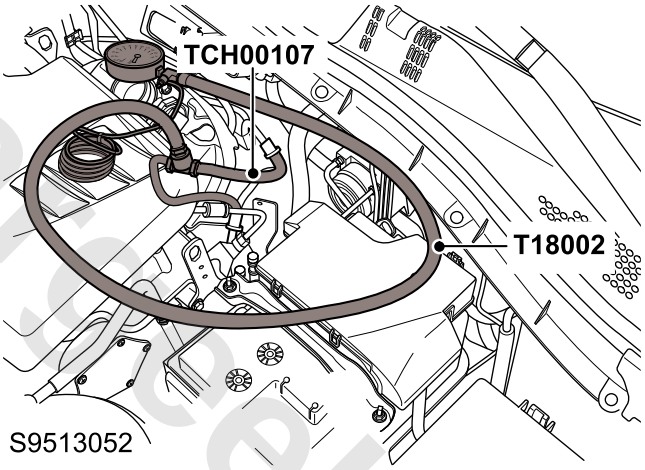

5. Start the engine to allow the fuel pump to work, observe the readings on the fuel pressure gauge within a minute, if the readings are in the range of 3.5-3.9bar, it indicates that the fuel system is normal.
6. Stop the engine to make the fuel pump not run, if the system pressure declines below 2bar after 20 minutes, it indicates that there is something wrong with system pressure maintaining, so check the pressure regulating valve of fuel pump for normal operation.
7. Respectively disconnect the high-pressure fuel pump low-pressure fuel pipe and fuel supply pipe from **TCH00107**.
8. Drain the remaining fuel in the tool to the container.
9. Connect the high-pressure fuel pump low-pressure fuel pipe to fuel supply pipe.

www.cargeek.ir

Fuel Tank - Drain

Drain and Refill

Warning: The capacity of containers must be more than adequate for the amount of fuel to be extracted or drained. The container should be clearly marked with its contents and placed in a safe storage area which meets the requirements of local authority regulation.

Warning: Proper fuel recovery equipment must be used, and make sure the necessary protective measures have taken to prevent fire and explosion.

1. Remove the fuel filler cap from the fuel filler port.
2. With a fuel recovery device, drain the fuel into a sealed container from the fuel tank.

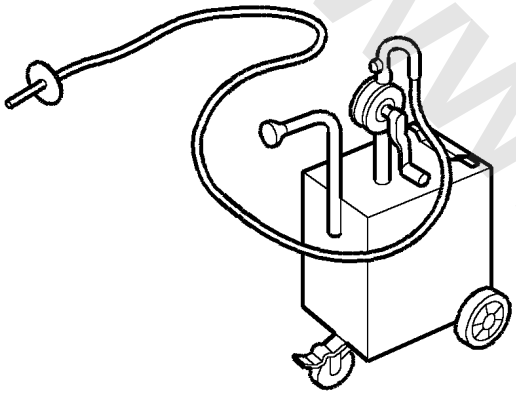

S183001

3. Please follow the manufacturer's instructions on the connection and safe use of the fuel recovery device.

Warning: The capacity of containers must be more than adequate for the amount of fuel to be extracted or drained. The container should be clearly marked with its contents and placed in a safe storage area which meets the requirements of local authority regulation.

4. Refill the fuel tank.

Fuel Tank Filler Pipe

Remove

1. Disconnect the battery negative cable.

Warning: Fuel vapour is highly flammable and in confined spaces is also explosive and toxic. Always have a fire extinguisher containing foam, CO2, gas or powder close

2. Drain the fuel tank.

Fuel Tank - Drain

3. Pull the fuel filler flap release handle under the instrument panel at the driver side to open the fuel filler flap.
4. Open the fuel tank filler cap.
5. Remove 3 bolts fixing the fuel tank filler to the body.

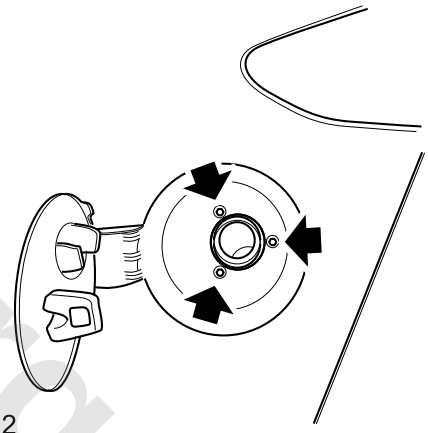

S9513012

6. Remove the rear wheel house liner.

Rear Wheel House Liner - Remove

7. Remove the muffler heat shield.

Rear Muffler Heat Shield - Remove

8. Remove 2 nuts and 2 bolts fixing the fuel filling pipe to the body.

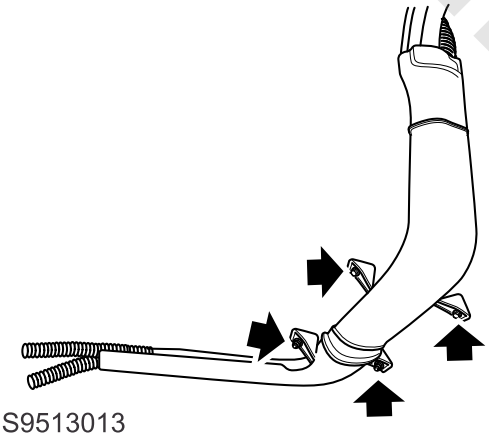

S9513013

9. Disconnect the canister vent hose.
10. Loosen and discard clamps between the fuel tank filling hose and the fuel tank.

www.cargeek.ir

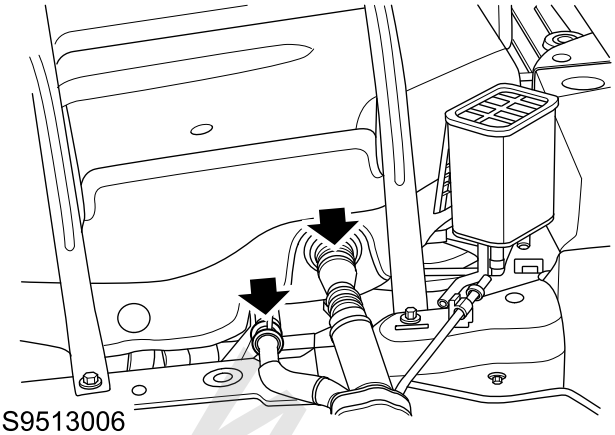

S9513006

11. Remove the fuel tank filler pipe assembly.

Refit

1. Locate the fuel filling pipe, connect the fuel filling pipe to the hose between the fuel filling pipe and the fuel tank, and secure with clamps.
2. Connect the canister vent hose.
3. Fit 2 bolts and 2 nuts securing the fuel filling pipe to the body, and tighten to **5–7Nm** respectively.
4. Fit the head of the fuel filling pipe assembly to the oil filler slot.
5. Fit the muffler heat shield.

☞ **Rear Muffler Heat Shield - Refit**

6. Fit the rear wheel house liner.

☞ **Rear Wheel House Liner - Refit**

7. Fit 3 bolts fixing the fuel filler to the body, and tighten to **5–7Nm**.
8. Refill the fuel tank.
9. Fit the fuel tank filler cap.
10. Close the fuel filler flap.
11. Connect the battery negative cable.

Fuel Filter

Remove

1. Disconnect the battery negative cable.
2. Release the pressure of fuel system.

☞ **Fuel System - Pressure Relief**

3. Raise the vehicle on a lift.
4. Disconnect the connector of the fuel filter inlet pipe and fuel return pipe from the fuel filter.

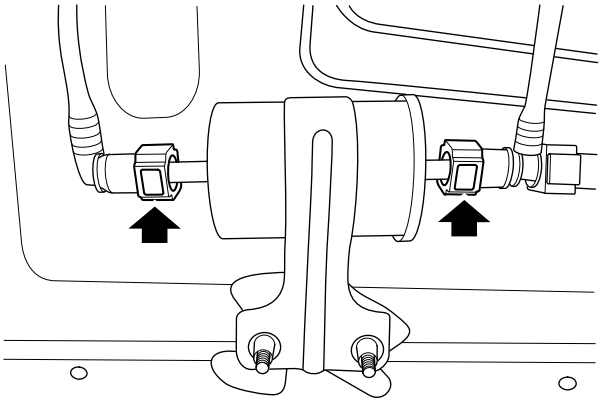

S9513011

Caution: Always fit plugs to open connections to prevent contamination.

Warning: The spilling of fuel is unavoidable during this operation. Ensure that all necessary precautions are taken to prevent fire and explosion.

5. Release 2 nuts securing the fuel filter bracket to remove the fuel filter assembly.

Refit

1. Locate the ground terminal.
2. Tighten 2 nuts of the fuel filter bracket to **7–10Nm**.
3. Connect the connector of the oil inlet/return pipes to the fuel filter.
4. Lower the vehicle.
5. Connect the battery negative cable.

www.cargeek.ir

Special Tools

Tool Number	Description	Picture
T18007	Wrench fuel tank lock ring	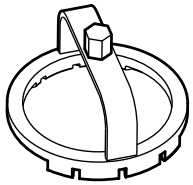 T18007
TCH00106	Three-way pipe of fuel pressure gauge	TCH00106
T18002	Fuel pressure test equipment	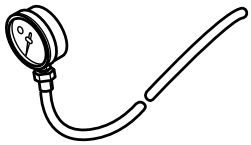 T18002
TCH00107	Three-way pipe of fuel pressure gauge	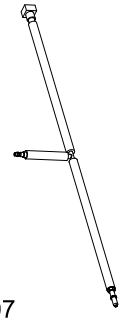 TCH00107

www.cargeek.ir

www.cargeek.ir

Engine Control System-2.0T

Specifications

Torque

Description	Value
Spark plugs	15-20Nm
Bolt-Ignition coil	7-10Nm
nuts -ECM to body	7–10Nm
nuts and bolts -ECM bracket to body	8–10Nm
ECT sensor	14–18Nm
Bolt-CMP sensor to camshaft cover	9–11Nm
Oil pressure switch	14–18Nm
Screw-MAF to air dust	1.4–1.8Nm
Bolt -high fuel bump to camshaft cover	9-11Nm
Nut -low fuel line to high fuel bump	20-24Nm
Nut -high fuel line to high fuel bump	26-34Nm
Nut -high fuel line to fuel rail	26–34Nm
fuel rail pressure senso	30–35Nm
Bolt-CKP sensor	9–11Nm
Screw-MAP sensor to throttlebody inlet pipe	5–7Nm
Screw-Camshaft position sensor	5–7Nm
Bolt-Knock sensor	15–25Nm
Heated oxygen sensor	45–60Nm
Screw-turbocharger valve to bracket	2.5–3.5Nm
Bolt-fuel rail to camshaft cover	23-27Nm
Bolt -purge valve bracket to intake manifold	9–11Nm

www.cargeek.ir

www.cargeek.ir

www.cargeek.ir

Description and Operation

System Layout

Fuel Control Layout

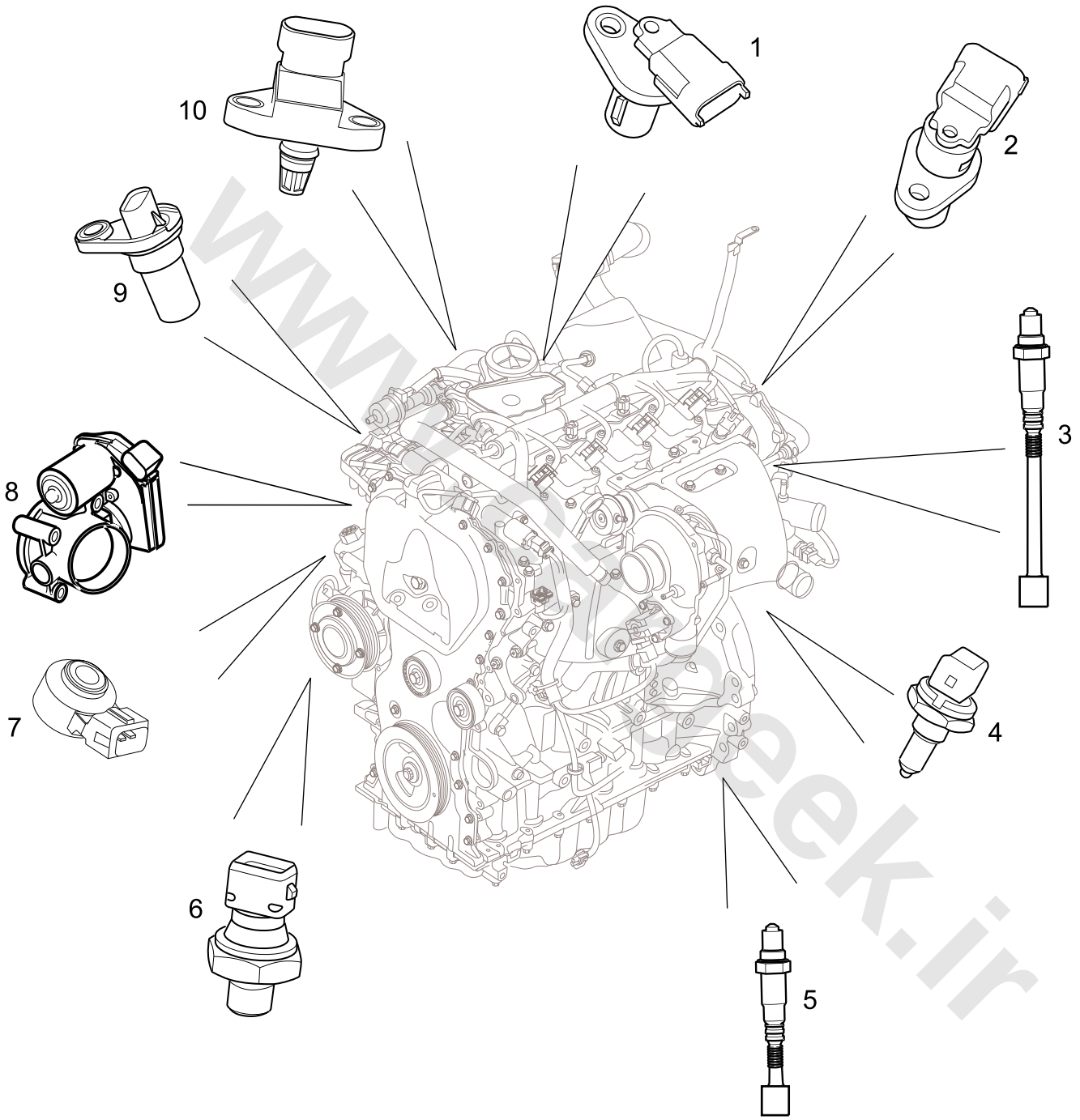

S1130100

1. Intake Camshaft Position Sensor
2. Exhaust Camshaft Position Sensor
3. Upstream Oxygen Sensor
4. Coolant Temperature Sensor
5. Downstream Oxygen Sensor
6. Oil Pressure Switch
7. Knock Sensor
8. Electronic Throttle
9. Crankshaft Position Sensor
10. Intake Air Pressure Sensor

www.cargeek.ir

System Control Diagram

Engine Control System Control Diagram

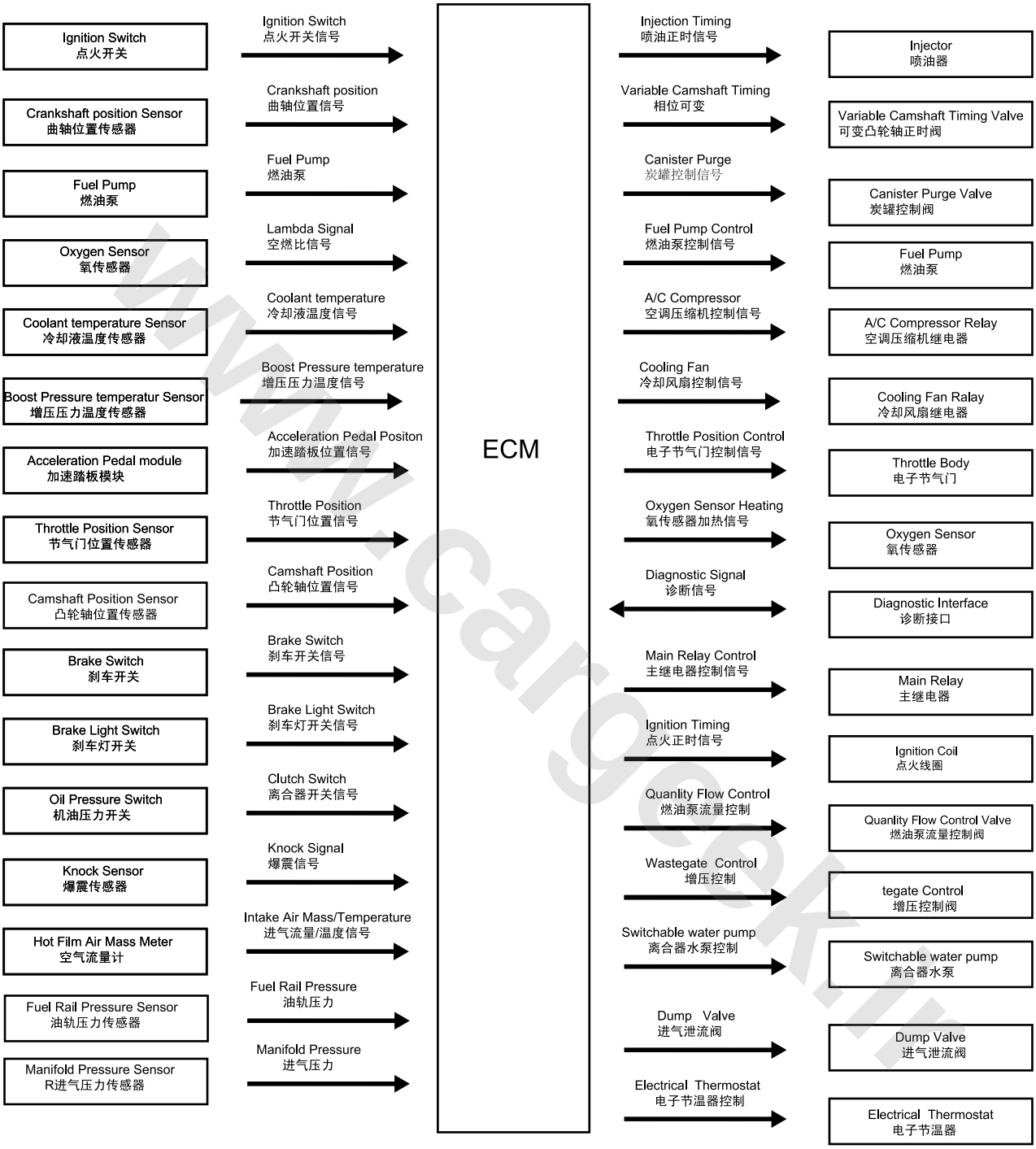

A = 硬线

www.cargeek.ir

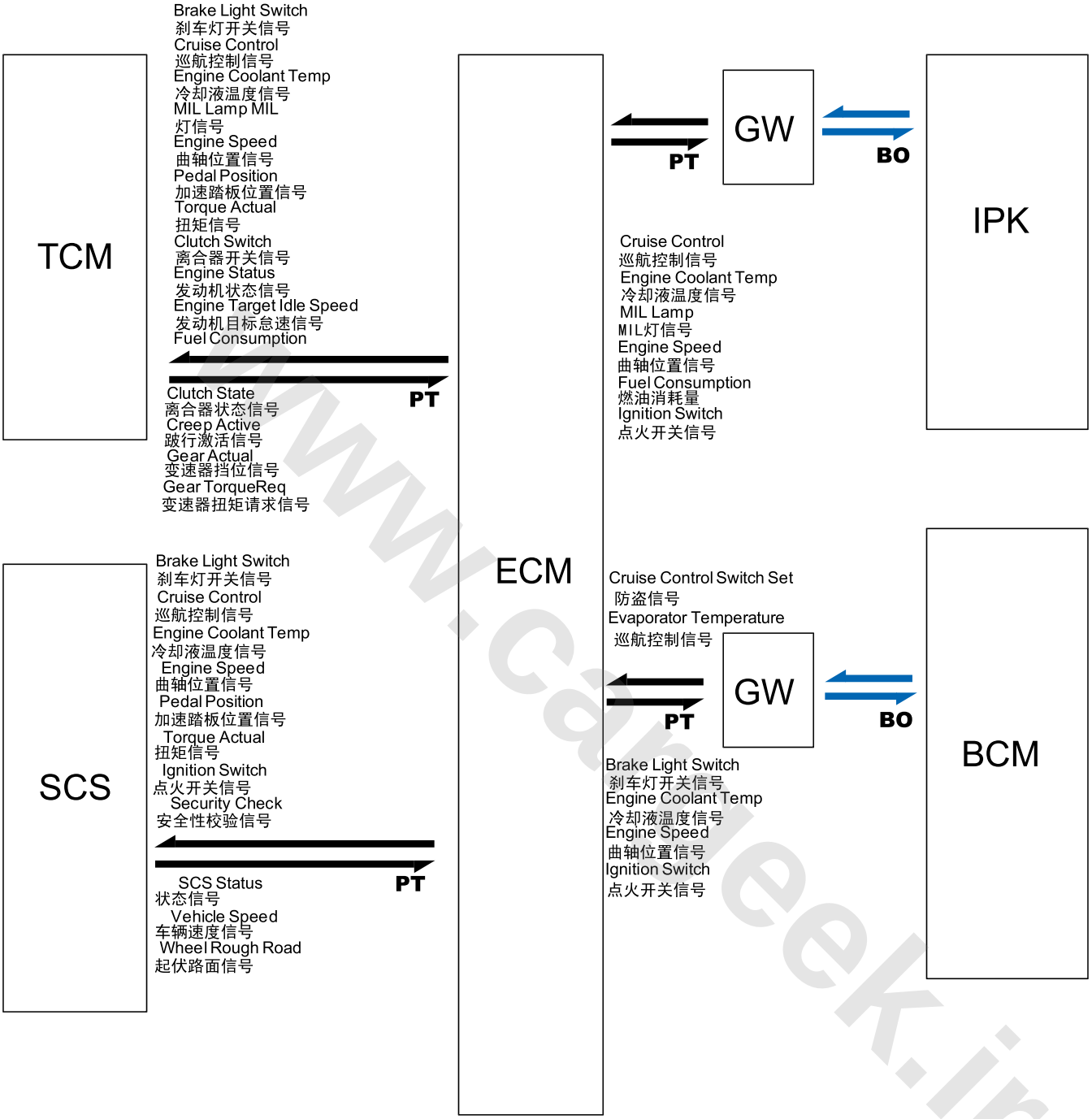

*A = Power HS **CAN** Bus; B = Body HS **CAN** Bus*

www.cargeek.ir

Description

Overview

The engine management system is generally composed of the sensor, microprocessor (**ECM**) and actuator, which controls the intake air, fuel injection and ignition advance angle during engine operation. The engine applies BOSCH MED17 **ECM**. The purpose of the MED17 engine electronic management system is to give accurate calculation of the fuel injection quantity, provide the injection pressure required and determine the staring point of the injection so that the fuel can inject into the combustion chamber directly and accurately. The system shall meet different torque requirement and adjust the work of the engine according to the final requirement. The main task of the engine management system is to adjust the torque. The most important torque requirement is from the driver's accelerator pedal, and the engine management system will provide a specific torque according to the position of the accelerator pedal. In addition, the transmission shift control, TCS and electronic stability control system may send more torque requirements. The engine management system is designed to enhance power performance, reduce fuel consumption and exhaust pollution.

Engine Control Unit (ECM)

The engine control unit is the control center of the fuel injection system, which monitors continuously the information from each sensor, controls the systems that influence the vehicle performance and diagnose the system. The engine control unit is able to identify operation fault, alerts the driver by the malfunction indicator lamp (**MIL**) and stores the DTC of the faulty part for the service personnel.

ECM Harness End Connector End View

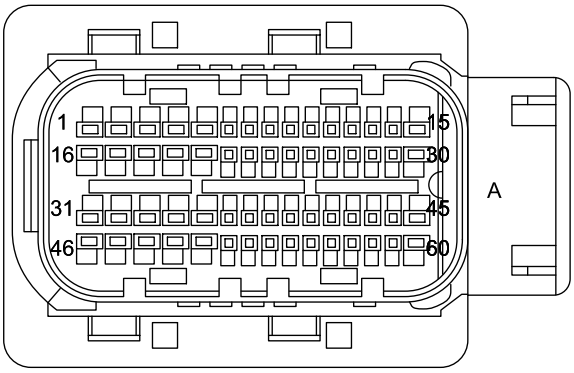

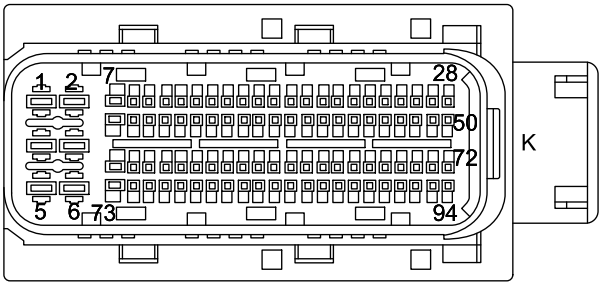

Pin Information of **ECM** Harness Connector

Pin No.	Description
A01	Ignition of Cylinder 4
A02	Ignition of Cylinder 2
A03	Fuel Control Valve-
A04	Fuel Control Valve+
A05	Variable Valve Timing (Exhaust)
A06	—
A07	5V Power
A08	Ground
A09	—
A10	Knock Sensor - Signal
A11	—
A12	5V Power
A13	Ground
A14	Ground
A15	—
A16	Ignition of Cylinder 1
A17	Ignition of Cylinder 3
A18	Pressurization Control Valve
A19	Electronic Throttle+
A20	Electronic Throttle-
A21	—
A22	Ground
A23	Crankshaft Position Sensor Signal
A24	Throttle Position Sensor 1 Signal
A25	Knock Sensor + Signal
A26	—

www.cargeek.ir

A27	5V Power
A28	—
A29	5V Power
A30	—
A31	Fuel Injection + of Cylinder 1
A32	Fuel Injection + of Cylinder 4
A33	Fuel Injection - of Cylinder 1
A34	Fuel Injection - of Cylinder 3
A35	Canister Control Valve
A36	—
A37	—
A38	Intake Air Temperature Sensor 2 Signal (Integrated with TMAP)
A39	Boost Pressure Sensor Signal
A40	Fuel Rail Pressure Sensor Signal
A41	Throttle Position Sensor 2 Signal
A42	—
A43	—
A44	Ground
A45	—
A46	Fuel Injection + of Cylinder 3
A47	Fuel Injection + of Cylinder 2
A48	Fuel Injection - of Cylinder 4
A49	Fuel Injection - of Cylinder 2
A50	Variable Valve Timing (Intake)
A51	—
A52	—
A53	Camshaft Position Sensor (Intake) Signal
A54	Camshaft Position Sensor (Exhaust) Signal
A55	—
A56	Intake Air Temperature Sensor 1 Signal (Integrated with HFM)
A57	Coolant Temperature Sensor Signal
A58	Hot Film Airflow Signal (HFM7)

A59	Ground
A60	Electronic Thermostat
K01	**ECM** Ground 1
K02	**ECM** Ground 2
K03	KL.87
K04	**ECM** Ground 3
K05	KL.87
K06	KL.87
K07	—
K08	Intake Bleeder Valve
K09	—
K10	—
K11	Ground
K12	—
K13	—
K14	Ground
K15	—
K16	—
K17	—
K18	—
K19	Brake Lamp Switch
K20	—
K21	Brake Switch
K22	P/N Signal
K23	Oil Pressure Switch
K24	—
K25	—
K26	Cooling Fan Relay 3
K27	Cooling Fan Relay 1 and 2
K28	Low-pressure Fuel Pump Relay
K29	Downstream Oxygen Sensor Heating
K30	KL.30
K31	Starter Motor Relay
K32	—
K33	Oxygen Sensor Ground
K34	—
K35	Ground
K36	—
K37	—
K38	—
K39	—

www.cargeek.ir

K40	—
K41	—
K42	Electronic Auxiliary Water Pump Relay
K43	—
K44	Power HS CAN Low
K45	Power HS CAN High
K46	—
K47	—
K48	Starter Feedback Signal
K49	—
K50	—
K51	—
K52	Ground
K53	—
K54	—
K55	—
K56	—
K57	—
K58	5V Power
K59	5V Power
K60	A/C Pressure Switch Signal
K61	Accelerator Pedal Position Sensor 2 Signal
K62	Downstream Oxygen Sensor Signal
K63	Intake Air Pressure Sensor Signal
K64	—
K65	—
K66	—
K67	—
K68	—
K69	Main Relay
K70	—
K71	A/C Compressor Relay
K72	—
K73	Upstream Oxygen Sensor Heating
K74	Clutch Water Pump
K75	—
K76	Upstream Oxygen Sensor Ground
K77	Upstream Oxygen Sensor Nernst Battery Voltage
K78	Upstream Oxygen Sensor Trimming Resistor
K79	Upstream Oxygen Sensor Pump Current Signal
K80	—
K81	5V Power
K82	5V Power
K83	Accelerator Pedal Position Sensor 1 Signal
K84	—
K85	ACC Wake-up Signal
K86	—
K87	KL.15
K88	—
K89	—
K90	—
K91	—
K92	—
K93	—
K94	—

The engine management system is composed of the following 6 parts according to control principle:

- External Control
- Air Supply Control
- Ignition Control
- Fuel Supply Control
- Accessory 1 (Heat Management)
- Accessory 2 (External Auxiliary)

External Control

The external control of the engine mainly includes:

- Main Relay
- Ignition Switch
- Battery
- **CAN** Communication
- Anti-theft System

The external control refers to the power supply and communication. One line of power supply of the engine control unit (**ECM**) is directly connected to power supply through fuse to ensure **ECM** is in energized state. When the ignition switch is in ON or START position, the engine control unit can control the main relay to open or connect the ignition power supply.

The engine management system can communicate with the controllers of other nodes on the network through **CAN** and ensure the performance of the system. It can also connect the

www.cargeek.ir

data link connector (DLC) and help the service personnel to carry out diagnosis.

Main Relay Control

When the **ECM** receives an ignition signal, it will close the main relay which provides power for the throttle, many sensors and actuator. And the **ECM** monitors the voltage of the system according to the relay voltage.

Failure

The main relay may have malfunction under the following conditions:

- The relay winding is short-circuited
- The relay winding has a break circuit
- The relay winding has a high resistance
- Relay contact is normally open.
- Relay contact is normally closed.
- Relay contact has a high resistance.
- Relay harness is open.
- Relay harness has a high resistance.
- Relay harness connected to the 12V power supply is short-circuited.
- Relay harness connected to the ground is short-circuited.
- **ECM** does not provide grounding access

Carry out the following inspections to check whether the main relay can work normally:

- Sound inspection - place the ignition switch in "ON" position to check whether the fuel pump will work for 2s.
- Check whether the fuel injector or ignition coil has enough power (apply multimeter to check the battery voltage).

If the above are verified, the main relay is OK.

CAN Communication

The engine management system applies the high speed **CAN** to communicate with the **ECM**, SCS, **BCM**, **TCM** and diagnoses outputs through the diagnostic interface.

Anti-theft System

When placing the ignition switch in "ON" position, the engine control module (**ECM**) and body control module (**BCM**) communicate through the **CAN** HS Bus and verify information mutually. After verification, the **BCM** allows the starter motor to work. When turning the key, the **ECM** controls the ignition, fuel injection and engine start. If the **BCM** cannot receive the verification information from the **ECM**, the starter motor does not work and the engine does not start.

Engine Air Supply Control System

The engine air supply control system includes:

- Electronic Throttle Body
- Accelerator Pedal Module
- Boost Pressure Sensor
- Camshaft Position Sensor
- Variable Camshaft Timing Valve
- Air Flow Meter
- Boost Pressure Control Solenoid Valve
- Intake Air Pressure Sensor
- Intake Bleeder Valve

The gasoline direct injection system requires a complicated engine management system to fully satisfy the high fuel economy and high output power. In terms of gas mixture formation, the two basic operating modes are somewhat different:

- Low Load Range

  In this range, the engine works in a highly delaminated and thin gas mixture so as to achieve the minimum possible fuel consumption. In order to acquire a desired two layers of gas mixture in the combustion chamber, fuel injection is delayed (before the ignition): the first layer of flammable gas mixture gathers in the spark plug, and the outside second layer of the gas mixture is composed of the air and residual gas. This allows the engine to work under other conditions instead of the throttle condition and avoids ventilation loss. In addition, this also helps to avoid wall thermal loss of the combustion chamber and improve the thermodynamic efficiency.

- High Load Range

  When the engine load and quantity of fuel injection rise, the delaminated gas mixture gets increasingly rich, this can deteriorate the emission, especially the black smoke. Therefore, when the engine works at a higher load, the gas mixture in the cylinder shall be evenly distributed. The fuel injects into the cylinder during the intake stroke so that the fuel and air can mix evenly.

To control the intake air accurately, the engine management system is provided with a boost pressure sensor, intake air pressure sensor and air flow meter, and the **ECM** uses these sensors to acquire information of the intake air. With such information, the **ECM** is able to control the turbocharger system by the intake bleeder valve and boost control valve. Furthermore, the **ECM** can also control the intake/exhaust valves and optimize the intake air according to the signal from the intake/exhaust camshaft position sensors.

www.cargeek.ir

www.cargeek.ir

Electronic Throttle

The electronic throttle is composed of the throttle, throttle actuator (DC motor) and throttle position sensor, etc.

The **ECM** commands the DC motor to work and influences the opening of the throttle through the drive mechanism. The two potentiometers function as position sensors which are fitted in reverse phase. When the position of the throttle changes, the two-channel resistance varies linearly, one increases and the other decreases. When a +5V voltage is added, the position of the sensor will be transformed into a voltage output which varies with the resistance.

These two potentiometers and the two potentiometers on the accelerator pedal module used for monitoring the travel of the accelerator pedal form part of the whole electronic throttle control system monitoring function, which can provide the redundancy protection expected by the system control.

Throttle Position Sensor

The throttle position sensor is used to provide throttle angle information for **ECM**. The **ECM** can learn engine load information, operating conditions (such as start, idle speed, reverse towing, part load, full load and acceleration/deceleration) according to this information.

Actually, the throttle sensor is an angle potentiometer characterized by linear output. The potentiometer rotor arm and throttle are fitted on the same shaft. When the throttle rotates, the potentiometer rotor arm will slide into a specified location. Voltage signals output by the potentiometer are proportional to the throttle position.

Accelerator Pedal Module

The two potentiometers in the accelerator pedal module act as sensors, their resistance varies with the position of the electronic accelerator pedal, and the **ECM** can response precisely to the movement of the accelerator pedal, so it can also monitor the motion of the accelerator pedal.

Because both potentiometers are fitted in the same phase, when the position of the accelerator pedal changes, their resistance will increase or decrease linearly. When a +5V voltage is added, the position of the pedal will be transformed into a voltage output which varies with the resistance. These two potentiometers and two potentiometers on the electronic throttle used for monitoring the position of the throttle form part of the monitoring function of the whole electronic throttle control system, which can provide the redundancy protection expected by the system control.

Boost Pressure Sensor (TMAP)

The boost pressure sensor is fitted on the pipe between the compressor and the throttle. The part for measuring pressure is a piezoelectric sensor which uses the sensing element to measure the pressure. It provides "load signal" for the controller according to the pressurized intake manifold pressure measured. The controller supplies the 5V power, and the boost pressure sensor provides the 0-5V voltage feedback for the controller based on different boost pressures. The intake air temperature sensor 2 is an NTC sensor which measures the intake air temperature. When the temperature rises, the resistance decreases. It also provides the 0-5V voltage feedback for the controller based on different intake air temperatures.

Camshaft Position (CMP) Sensor

The camshaft position sensor is used in conjunction with the speed sensor, which provides the **ECM** with the camshaft phase information namely, identify the TDC on the compression stroke and TDC on the exhaust stroke of cylinder 1.

The Camshaft position sensor is composed of a hall sensor and a rotor made of steel plate. The hall sensor is fixed, and the rotor with a 36° arc boss is fitted on the camshaft. The magnetic field inside the hall sensor will change when the boss passes it, which leads to change of the output signal voltage. In this way, the two top dead centers are identified.

Failure

The **CMP** sensor or magnetic ring may have failures or provide incorrect signals due to the following conditions:

- **CMP** sensor gap fails to comply with the specifications.
- **CMP** sensor is contaminated by metallic debris.
- **CMP** sensor hall-effect semiconductor is damaged.
- **CMP** sensor magnetic field is too weak.
- **CMP** sensor harness has a break circuit.
- **CMP** sensor harness is short-circuited.
- **CMP** sensor harness has a high resistance.
- Magnetic ring is contaminated by metallic debris.
- The precision of magnetic ring is low due to mechanical damage.
- Exhaust camshaft timing is incorrect.
- Intake camshaft timing is incorrect.

Variable Camshaft Timing Valve

The engine control module outputs pulse width modulation (**PWM**) signal to drive the solenoid. Change of the duty cycle may help to adjust the opening of the solenoid.

Under low engine speed, the system can reduce fuel consumption and emission and improve the performance of the engine, especially torque characteristics.

The **ECM** receives signals from **CKP** sensor and **CMP** sensor. With these signals, the **ECM** determines the valve timing by consulting the control chart. Then, the **ECM** operates the

www.cargeek.ir

oil control valve on the side of the cylinder head. These solenoids adjust the valve timing by controlling the oil to flow into the phase modulator and changing the position of the phase modulator relative to the camshaft.

Air Flow Meter (HFM)

HFMIt works according to the hot film principle. The **HFM** has two sensing elements in one film. One element works in ambient temperature (intake air temperature sensor 1), such as 25°C (77°F), while the other is heated to 200°C (392°F), exceeding 225°C (437°F). The air passing by the **HFM** will generate a cooling effect. The air flow which maintains the temperature difference of 200°C (392°F) may provide precise and non-linear signal.

The **HFM** is combined with the **NTC** thermistor in the voltage divider circuit. The resistance value of the thermistor decreases with the increase of the intake air temperature. The **NTC** thermistor current forms a voltage division circuit, the variation of the reference voltage which controls the voltage division circuit is transformed by the **HFM** into a more stable frequency signal output for the **ECM**, and the **ECM** calculates the air flow and corrects the quantity of fuel injection by this frequency signal.

If the **HFM** fails, the **ECM** performs the alternative strategy. If the **HFM** signal error occurs, the following symptoms may occur:

- Hard Start
- Engine stops after starting
- Emission control does not work
- Idle speed control does not work
- Poor engine performance

If the **NTC** thermistor fails, the set air temperature is defaulted to be -5°C (23°F) by the **ECM**. If signal error of the **NTC** thermistor occurs, one of the following symptoms can be observed:

- Black smoke is caused by excessive oil supply
- Idle speed control does not work

Boost Pressure Exhaust Control Solenoid Valve

The boost control solenoid valve uses the duty cycle information from the **ECM** to adjust the boost pressure of the turbocharger. The greater the duty cycle is, the higher the boost pressure will be.

When the engine works at medium load or small load, the boost solenoid valve controls the diaphragm type bypass valve to lead the exhaust gas from the exhaust pipe into the bypass pipeline, and the boost pressure is extremely small at the moment; when the engine accelerates or works at high load and high speed, the boost solenoid valve controls the diaphragm type bypass valve to reduce the bypass opening of the exhaust pipe, then the exhaust gas flows into the turbocharger and the boost pressure rises at this stage.

Intake Air Pressure Sensor (MAP)

The intake air pressure/temperature sensor is fitted on the intake pipe. The part for measuring pressure is a piezoelectric sensor which uses the sensing element to measure the pressure. It provides "load signal" for the controller according to the MAP measured. The controller supplies the 5V power, and the sensor provides the 0-5V voltage feedback for the controller based on the intake pressure.

Intake Bleeder Valve

The intake bleeder valve is used to recirculate the pressurized air in the compressor of the turbocharger system into the intake pipe, this allows the boost pressure to decrease rapidly during engine surge and shift.

The **ECM** sends "ON/OFF" command to instruct the solenoid valve of the intake bleeder valve to work. When the solenoid valve opens, the compressed air can circulate into the intake pipe, see the figure below:

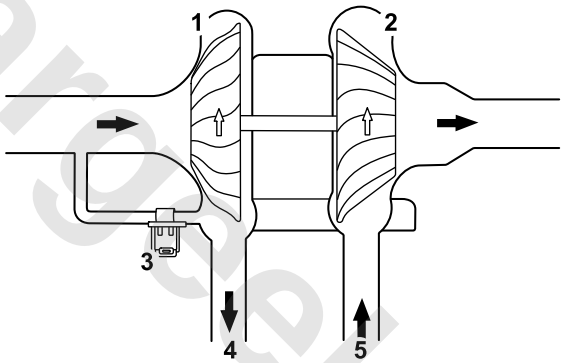

S1314001

1. Compressor
2. Turbine
3. Intake Bleeder Valve
4. To Intake Air
5. To Exhaust

Engine Ignition Control System

The engine ignition control system includes:

- Ignition Coil 1 ~ 4
- Crankshaft Position (**CKP**) Sensor
- Knock Sensor

Ignition Coil

The ignition coil converts the battery low voltage DC to high voltage and uses the spark by spark plug discharge to ignite the gas mixture in the cylinder. Each ignition coil contains a pair of coil windings around the laminated iron core, it also includes a primary resistance and secondary resistance.

www.cargeek.ir

There are two ignition coils on the camshaft cover. They are fitted to each cylinder by connectors and harnesses. And a spark plug is provided under each ignition coil.

Failure

The ignition coil may have failures under the following conditions:

- Primary winding is open.
- Primary winding is short-circuited.
- The resistance of primary winding is out of tolerance.
- Secondary winding is open.
- Secondary winding is short-circuited.
- The circuit connecting secondary winding with primary winding is short.
- The resistance of secondary winding is out of tolerance.
- Coil top insulation is mechanically damaged.

Crankshaft Position (CKP) Sensor

The **CKP** sensor provides information of the engine speed and crankshaft TDC, which is a hall-effect sensor and used in conjunction with the pulse wheel. The pulse wheel is a teeth plate, with 58 small teeth spaced at an interval of 6°on the magnetic ring and with 2 teeth absent. The pulse wheel is fitted on the crankshaft, which rotates with the crankshaft. When the tooth tips pass by sensor ends, the pulse wheel made of steel magnetic materials cuts the magnetic force line of the permanent magnets in the sensor and produces induced voltage in the coil, which will be output as the speed signal.

Failure

The **CKP** sensor or magnetic ring may have failures or provide incorrect signals due to the following conditions:

- **CKP** sensor gap fails to comply with the specifications.
- **CKP** sensor is polluted by dust.
- **CKP** sensor hall-effect semiconductor is damaged.
- **CKP** sensor magnetic field is too weak.
- **CKP** sensor harness has a break circuit.
- **CKP** sensor harness is short-circuited.
- **CKP** sensor harness has a high resistance.
- Magnetic ring is polluted by dust.
- The precision of magnetic ring is low due to erosion or mechanical damage.
- **CKP** sensor signal is distorted due to out-of-round flywheel or driving disk.
- **CKP** sensor signal is changed due to crankshaft radial movement.

In order to check the **ECM** for receiving the signal from **CKP** sensor, following operations may be conducted:

- Check the fuel pump during engine start, if the fuel pump supplies fuel when the ignition starts, but does not work yet, the **ECM** fails to receive the signal from the **CKP** sensor.

Knock Sensor

The knock sensor is used to provide the electronic controller **ECM** with engine knock information for knock control.

The knock sensor is a vibration acceleration sensor. It is fitted on the engine cylinder block. The sensitive component of the sensor is a piezoelectric crystal. The vibration of the engine block is transferred to the piezoelectric crystal through the mass block in the sensor. The vibration of the mass block can produce pressure which helps the piezoelectric crystal to generate voltage on both pole surfaces and transform the vibration signal into voltage signal output.

Failure

The knock sensor may have failures or provide incorrect signals due to the following conditions:

- The sensor has a break circuit.
- Sensor ground is short-circuited.
- Sensor circuit is intermittently open.
- Knock sensor is improperly fitted.

In case of knock sensor signal error, the following symptoms may occur:

- Failure code is stored.
- **ECM** fails to inspect engine combustion knock.
- **ECM** restores default settings.

Engine Fuel Supply Control System

The engine fuel supply control system mainly includes:

- Upstream Oxygen Sensor
- Downstream Oxygen Sensor
- Fuel Injector 1 ~ 4
- Canister Valve
- Low-pressure Fuel Pump Relay
- Fuel Control Valve
- Fuel Rail Pressure Sensor

The engine fuel supply control system is applied to control the fuel supply of the engine under different working conditions.

MED-Motronic injection system stores the fuel to the fuel rail according to the specific pressure, and the fuel is injected into the combustion chamber by the electromagnetically controlled injector. And thus it can provide the following functions:

- Free selection of injection starting point
- Variable system pressure

www.cargeek.ir

Wide-range Oxygen Sensor (LSU)

The upstream oxygen sensor is a wide-range oxygen sensor which can determine the oxygen concentration of the exhaust within a wide range. The data provided by the sensor shows the air/fuel ratio in the engine combustion chamber. It can produce correct and continuous signal in the range from thick gas mixture to thin gas mixture.

The wide-range oxygen sensor is a flat-plate type double-unit current limiting sensor, which has a zirconia measuring unit. This unit is a combination of the Nernest concentration sensor and oxygen "pump battery" sensor (which is used for transferring the oxyanion). The oxygen sensor must be heated to 350°C before it produces effective signals. It is equipped with an integrated heater, so it can reach the required temperature quickly.

Since the oxygen atom can be transferred with the current according to the polarity, the **ECM** controls the pump voltage of the pump battery to pump in or pump out appropriate amount of oxygen to the concentration sensor so as to maintain the air/fuel ratio measured by concentration sensor to be 1. When there is excessive air in the exhaust (thin), the oxygen is pumped out and the forward pump current is formed. The increase of the oxygen could lead to higher pump current; when the residual oxygen in the exhaust is low (thick), the pump battery pumps the oxygen, and the pump current is reversal at this time. The oxygen sensor transfers a current signal (change of oxygen concentration) to the **ECM**, and the pump current is proportional to the oxygen concentration in the exhaust, therefore, the pump current is a non-linearity measurement method for the excess air coefficient.

Failure

The wide-range oxygen sensor may have malfunctions or provide incorrect signals due to the following conditions:

- Impact Damage/Mechanical Impact
- External harness has a break circuit.
- External harness connected with the vehicle power is short-circuited or ground is short-circuited.
- Carbon or Silicon Deposits Pollution
- Exhaust system contains air.

Heated Oxygen Sensor

The downstream oxygen sensor is a heated oxygen sensor which measures the oxygen content in the engine exhaust and determines if the oil and air are burnt completely. The electronic controller achieves the closed-loop control goal (excess air coefficient l = 1) according to the information and ensures that the three-way catalytic converters have a higher efficiency in converting **HC**, **CO** and **NOx** in the exhaust.

Its sensing element is a ceramic tube, the outside connects the exhaust and the inside connects the atmosphere. When the temperature of sensing ceramic tube reaches 350°C, it has the property of solid electrolyte. With this property, the concentration difference of oxygen can be converted into potential difference which forms electric signal outputs. If the gas mixture is rich, the concentration difference of oxygen inside and outside the ceramic tube is high, the potential difference is high, a large amount of oxygen ions move from inside to outside and the output voltage is high (approximate to 900mV); if the gas mixture is thin, the concentration difference of oxygen inside and outside the ceramic tube is low, the potential difference is low, only a few of oxygen ions move from inside to outside and the output voltage is low (approximate to 100mV).

Failure

The **HO2S** may have failures or provide incorrect signals due to the following conditions:

- Leaded Fuel Pollution
- Carbon or Silicon Deposits Pollution
- Impact Damage/Mechanical Impact
- External harness has a break circuit.
- External harness connected to the 12V power supply is short-circuited.
- External harness connected to the ground is short-circuited.
- External harness has a high resistance.
- The heating device is open.
- The heating device is short-circuited.
- **ECM** fails to provide a ground access for the heating device.
- Harness shielding is not connected to the ground.

Canister Control Valve

The canister control valve is applied to control the regeneration air flow of the fuel evaporation control system. The canister in the fuel evaporation control system absorbs fuel vapor from the fuel tank till it cannot absorb any more. The **ECM** controls the canister control valve to open and allows fresh air and saturated fuel steam in the canister to form regeneration air flow, then sends it to engine intake pipe.

The electronic controller changes the duty cycle of the pulse signal transmitted to the canister control valve coil and controls the regeneration air flow based on different working conditions of the engine. Moreover, the regeneration air flow is also influenced by the pressure difference on both ends.

Failure

The canister control valve may have failures occurred under the following conditions:

www.cargeek.ir

- Electromagnetic winding has a break circuit.
- Electromagnetic winding is short-circuited.
- External harness connected to the 12V power supply is short-circuited.
- External harness connected to the ground is short-circuited.
- External harness has a high resistance.
- **ECM** does not provide **PWM** signal.
- Mechanical problems occur in the valve.

Low-pressure Fuel Pump Relay

The electric fuel pump transfers the fuel from fuel tank to the engine and provides sufficient fuel pressure and fuel.

It is a DC motor driven vane pump, which is fit in the fuel tank and immersed by the fuel. It applies fuel for heat dissipation and heat dissipation. The battery supplies power for the electric fuel pump via the fuel pump relay which connects the electric fuel pump only when the power is on and the engine operates. When the engine stops due to accident, the fuel pump will stop automatically.

Failure

If the fuel pump relay is failed, the following symptoms will be found:

At the time of start

- If the fuel system pressure falls to zero, the engine will fail to ignite.
- If the fuel system pressure is lower than routine operating pressure (0.38MPa), the engine may try to ignite but fail to operate normally.
- If the fuel system pressure is at a normal level, the engine will ignite and run, but it will be off finally as the fuel pressure declines and fail to start again.

While driving

If the fuel pump relay is failed while driving, the engine will loss power and be finally off due to shortage of fuel.

The main relay may have failures under the following conditions:

- Relay coil is short-circuited.
- Relay coil is open.
- Relay coil has a high resistance.
- Relay contact is normally open.
- Relay contact is normally closed.
- Relay contact has a high resistance.
- Relay harness is open.
- Relay harness has a high resistance.
- Relay harness connected to the 12V power supply is short-circuited.
- Relay harness connected to the ground is short-circuited.
- **ECM** is incapable of providing a ground access.

Carry out the following inspections and check the fuel pump relay for normal operation:

- Sound inspection - place the ignition switch in "ON" position to check whether the fuel pump will work for 2s.
- If there is no response, check the inertia switch and ensure it is not triggered accidentally. If there is no sign that the fuel pump is working, but the inertia switch is in "ON" position, remove the fuel pump relay and conduct inspection.

Check if the **ECM** provides the ground access for the fuel pump relay winding when the ignition switch is in "ON" position (for 2s) and during starting. Remove fuel pump relay, connect a multimeter between the 12V power supplied by the vehicle and the fuse box pin connected with fuel pump pin 85, check the output according to the circuit diagram after the ignition is on.

As the **ECM** internal drive circuit consumes voltage, the measured voltage may be lower than battery voltage.

Direct Fuel Injection System

The direct fuel injection system is composed of the high-pressure fuel pipe, fuel pipe (fuel pump to fuel rail), fuel rail assembly (including fuel rail, fuel rail pressure sensor, fuel injector) and low-pressure fuel pipe (before the high-pressure pump). The system operating pressure is 15MPa.

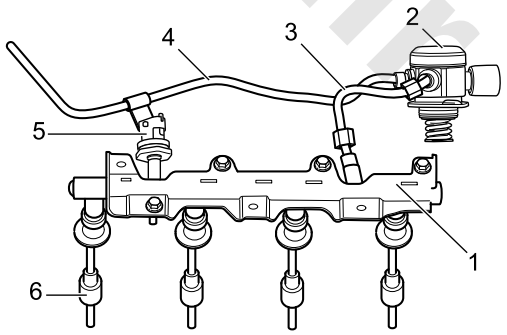

S1314005

1. Fuel Rail Assembly
2. High-pressure Fuel Pump
3. Fuel Pipe - Fuel Pump to Fuel Rail
4. Fuel Pipe - Before High-pressure Fuel Pump
5. Fuel Rail Pressure Sensor
6. Fuel Injector

www.cargeek.ir

High-pressure Fuel Pump

The function of the high-pressure fuel pump is to increase the pressure of the low-pressure fuel to 15MPa, minimize the pressure fluctuation in the fuel rail and prevent it from mixing with the oil.

The working process goes like this: when the fuel pump plunger goes down, the fuel pump is in the fuel suction stroke, and the low-pressure fuel enters into the cavity of the fuel pump plunger; the plunger starts to goes up after reaching the BDC, and the pressurized fuel is delivered to the high-pressure fuel rail.

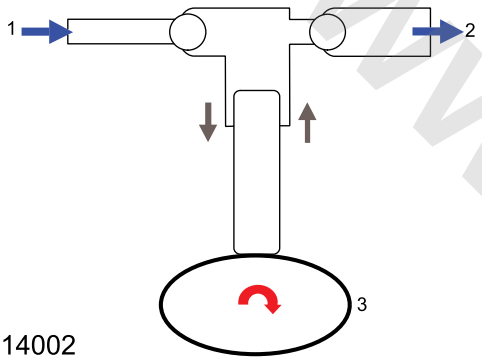

S1314002

Blue = high-pressure oil circuit; red = direction of cam rotation; black = direction of plunger motion

1. Inlet Fuel (from low-pressure fuel pump)
2. Outlet Fuel (to high-pressure fuel rail)
3. Cam

Fuel Control Valve

The **ECM** controls the high-pressure fuel flow by commanding the fuel control valve to open/close.

During the former half of the rising of the high-pressure fuel pump plunger, the fuel control valve is open, and the fuel cannot generate pressure, so part of the fuel returns to the low-pressure oil circuit by the fuel control valve.

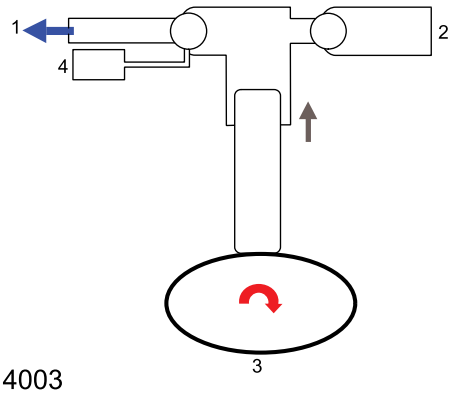

S1314003

Blue = high-pressure oil circuit; red = direction of cam rotation; black = direction of plunger motion

1. Inlet Fuel (from low-pressure fuel pump)
2. Outlet Fuel (to high-pressure fuel rail)
3. Cam
4. Fuel Control Valve

After solenoid valve activation, the fuel control valve starts to close, it will be fully closed after a while, and the plunger cavity is also fully closed at this point. The plunger keeps going up, when the pressure in the plunger cavity continues to rise (above rail pressure), the high-pressure fuel will be pumped into the fuel rail.

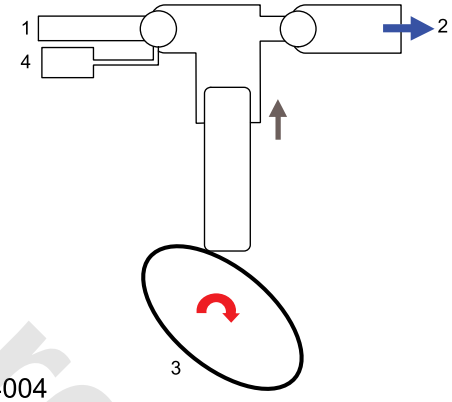

S1314004

Blue = high-pressure oil circuit; red = direction of cam rotation; black = direction of plunger motion

1. Inlet Fuel (from low-pressure fuel pump)
2. Outlet Fuel (to high-pressure fuel rail)
3. Cam
4. Fuel Control Valve

Fuel Rail Pressure Sensor

The fuel rail pressure sensor is used to measure the pressure in the fuel rail, which measures the pressure as per the piezoelectric crystal resistance and sends voltage signal to the **ECM**.

Fuel Injector

According to the directives of **ECM**, the fuel injector injects fuel within the specified time, supplies the engine with fuel and atomizes it. The **ECM** powers on the injector coil and forms magnetic force. When the magnetic force is strong enough to overcome the resultant force of the return spring pressure, needle valve gravity and friction, the needle valve begins to rise, and the fuel injection process starts. When the injector pulse is cut off, the pressure of the return spring recloses the needle valve.

Failure

The injector may have failures under the following conditions:

www.cargeek.ir

- Nozzle is polluted by dust or wax (flow is reduced).
- Nozzle Offset (nozzle is positioned incorrectly).
- Fuel Filter Blockage
- Winding is open-circuited.
- Winding is short circuit to ground.
- Winding connected to the 12V power supply is short-circuited.
- The resistance of winding is out of tolerance.
- External harness has a break circuit.
- External harness connected to the ground is short-circuited.
- External harness connected to the 12V power supply is short-circuited.

Accessory 1 (Heat Management)

The heat management portion mainly includes:

- A/C Compressor Relay
- A/C Pressure Switch
- Coolant Temperature Sensor
- Cooling Fan
- Clutch Water Pump
- Electronic Thermostat Control

According to the coolant temperature, the engine opens or closes the cooling fan relay.

When the driver presses the A/C option (switch) on the instrument panel, the engine control unit turns on the A/C according to the current signal of the engine coolant temperature sensor and engine speed, etc.

Coolant Temperature Sensor

The coolant temperature sensor provides the engine coolant temperature so that the controller can correct the fuel injection and ignition. It is a negative temperature coefficient (**NTC**) thermistor, its resistance value is reduced as the temperature rises, but not a linear relationship. The thermistor is mounted inside a copper heat conductive sleeve.

Failure

The **ECT** sensor may have failures or provide incorrect signals under the following conditions:

- The system is lack of coolant due to leakage.
- External harness has a break circuit.
- External harness connected to the ground is short-circuited.
- External harness connected to the 5V power supply is short-circuited.
- External harness has a high resistance.
- **ECM** is incapable of providing a ground access.
- **ECT** thermistor is damaged.

Cooling Fan

The **ECM** controls the 3 relays and the 3 cooling fan gears by the two PINs. The ECM controls the cooling fan speed based on the A/C request, engine coolant temperature, A/C pressure, ambient temperature and vehicle speed.

If the engine coolant temperature remains high after engine shutdown, the **ECM** will keep the cooling fan running.

Clutch Water Pump (switch type water pump)

The clutch water pump takes the structure of a clutch, when starting a cold engine, the **ECM** controls the clutch solenoid, the water pump pulley rotates, and the water pump impeller does not turn, and the engine coolant does not circulate, this shortens the engine warm-up time and reduces CO2 emission and fuel consumption. Vehicles with a turbocharger also contain an auxiliary electric water pump relay which can pump the cooling water into the turbocharger and lower its temperature in some cases after the engine stops.

Electronic Thermostat

The electronic thermostat adjusts engine coolant temperature, ensures the coolant temperature can rise rapidly and prevents hot engine. When the engine works at a low/medium load, increase of the engine coolant temperature can decrease oil viscosity, mechanical friction loss of the piston and heat transfer loss and optimize combustion; when the engine works at a high load/speed, decrease of the engine temperature can cool the engine rapidly.

The **ECM** gives **PWM** to command the electronic thermostat to work, when the paraffin and wax package of the heater core expand, the paraffin applies pressure to the push rod. The upper side and housing of the push rod are fixed, so the push rod pushes the whole core to move down reversely, and the interference fit between the copper cap and the main valve drives the main valve to open. The opening of the electronic thermostat is proportional to the duty cycle of the **PWM** signal.

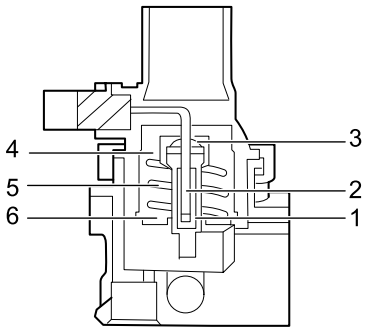

S1314006

www.cargeek.ir

1. Wax Package
2. Push Rod
3. Copper Cap
4. Main Valve
5. Spring
6. Bracket

Accessory 2 (External)

The external accessory includes:

- Alternator Control Input
- Brake Pedal Switch
- Brake Lamp

Alternator Control Input

The **ECM** applies the alternator control input to control the alternator to charge the battery while the engine works.

The alternator converts the mechanical energy from the engine into electric energy to charge the battery. Variation of the engine load can significantly affect engine idle speed. To compensate the load and stabilize the idle speed, the **ECM** needs to acquire the torque/load information from the alternator. The alternator connects the power management module PMDC by the **LIN** line, and the PMDC sends the alternator load network signal to the **ECM**. The **ECM** uses this information to obtain the load which the engine applies to drive the alternator.

Brake Lamp Switch

The brake lamp switch is fixed to the brake pedal bracket. The **ECM** monitors the switch status and transfers the data to **TCM** via **CAN** bus, the **TCM** controls the transmission clutch to open. When operating the brake pedal, activate the brake switch.

Cruise Control System

The cruise control system can allow the vehicle to move in a constant and comfortable speed without applying the accelerator pedal. The cruise control system involves:

- Brake Switch
- Cruise Control Switch
- Cruise Indicator Lamp
- Automatic Transmission **TCM**
- **ECM**
- Electronic Throttle

Cruise Control Switch

The cruise control switch is a handle switch which is used to engage/disengage the cruise control system and adjust the set speed.

The cruise control switch is connected with the GW which transmits network signal to the **ECM**, provides different voltage signals for the **ECM** by different switches and identifies current status of the cruise system.

Cruise Indicator Lamp

The indicator lamp indicates the status of the cruise control system, Which is located on the IPK, when the cruise control system is in standby, this indicator lamp is green; when it is activated, the lamp is yellow.

Standby

When the handle is in "ON" position, and the vehicle is in an ideal state for driving, the cruise control system enters into standby state.

- Non-brake State
- The road speed is within 40 -200 km/h.
- The engine is working and the vehicle speed is above 5 km/h.
- Engine speed is less than 6496 rpm.
- The transmission is not in "P" gear, "N" gear or "R" gear (for automatic transmission).
- The transmission is in the 3rd gear (for manual transmission).
- The TCS is not activated.

Activation

When it is in STANDBY, push the handle switch (SET button) to activate the cruise control system. The switch outputs the signal to the **ECM**; **ECM** operates the electronic throttle and generates the control required by the throttle.

When the cruise control system is activated, it sets the target cruise speed by the handle +/-. After receiving the input information from the switch +/-, the **ECM** stores current speed as set speed, operates the electronic throttle and maintains the set vehicle speed.

Acceleration/Deceleration

When the cruise control system is activated, accelerate/decelerate with the handle +/-.

Turn the switch +/- (less than 0.5s) to increase/decrease the vehicle set speed at the speed of 1km/h and accelerate/decelerate to the new set speed. Turn and hold the switch +/- to maintain the acceleration/deceleration until the switch is released. On this point, the accelerated/decelerated speed will be used as the new set speed.

The car can be accelerated by the accelerator pedal. With the cruise control system activated, if release the accelerator pedal, the speed at that moment is the set speed; if turn the switch +, the higher vehicle speed will be used as the new set speed.

www.cargeek.ir

Resume/Pause

When the cruise control system is in standby, turn the RESUME switch to resume the system and accelerate/decelerate to the set speed stored. Turn the CANCEL switch to pause the cruise control system, i.e. shift from activation to standby.

When one of the conditions for operating the cruise control system does not exist (e.g. applying the brake), the cruise control system pauses. If the vehicle speed is 70% lower than the set speed, for example, for uphill driving, the cruise control system can also pause.

If the vehicle speed exceeds the cruise set speed persistently 16km/h (for more than 30s), for example, when applying the accelerator pedal or driving downhill, the cruise control will pause.

Cancel

Turn the handle switch to "OFF" or place the ignition switch in "OFF" position to cancel the cruise control function. When the cruise control function is cancelled, the set speed in the cruise control system disappears and the indicator lamp on the IPK turns off.

www.cargeek.ir

www.cargeek.ir

Intelligent "Stop/Start" Fuel Saving System

System Control Diagram

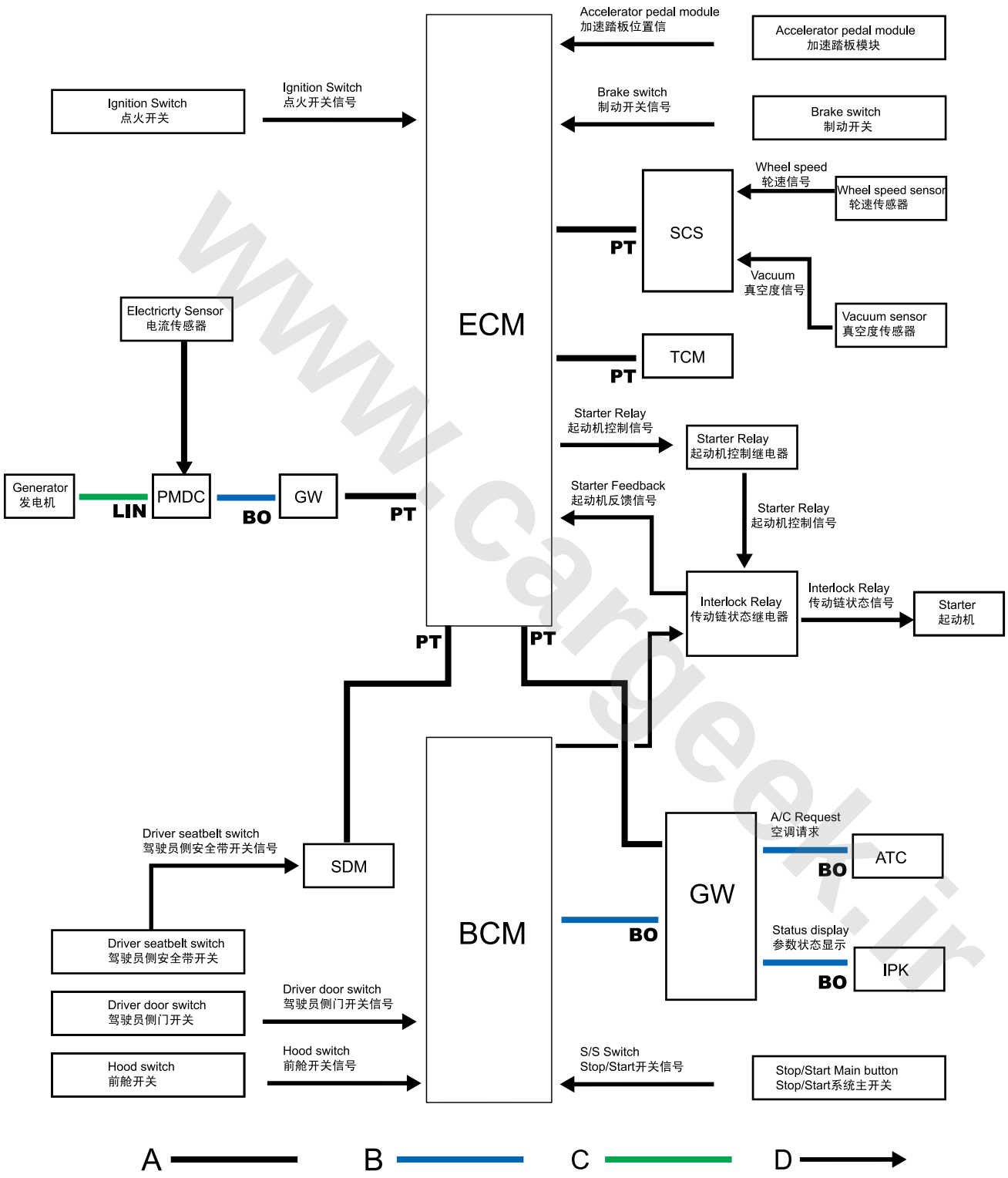

*A = Power HS **CAN** Bus; B = Body HS **CAN** Bus; C = LIN Bus; D = Hard Wire*

Overview

The intelligent Stop / Start energy saving system can automatically start or stop the vehicle at idle speed (such as waiting for traffic lights), improve fuel economy and realize stable and reliable vehicle start or stop.

After switching on the ignition switch, whether to enable the intelligent stop/start energy saving system depends on the ON/OFF status for last engine flameout. If the status is ON, the indicator lamp of the system illuminates.

www.cargeek.ir

Press the main switch on the central channel to turn off the intelligent Stop/Start energy saving system, at this time, the switch indicator lamp is off, and the instrument display shows "Stop/start system OFF".

Note: *Please turn off the intelligent stop/start energy saving system by pressing its main switch when driving in water.*

Automatic Engine Stop

With the intelligent stop/start energy saving system enabled, the engine will be automatically shut down when the following driver's operations and vehicle status are detected after the vehicle is stopped, at this time, the indicator lamp of the stop/start energy saving system on the instrument is on:

- Vehicles with automatic transmission: the gear is in "D" and the brake pedal is depressed, it will automatically shift to P/N gear when the engine automatically stops, and it is still in the automatic shutdown status when the brake pedal is released.
- The vehicle speed signal on the instrument is normal, and the maximum vehicle speed before parking is more than 10 km/h.
- There is no large steering operation when the vehicle speed is less than 10km/h.
- Close the engine hood and driver door, fasten the driver seat belt.

The intelligent stop/start energy saving system will be disabled and the engine will not stop automatically when the following situations occur:

- The engine does not reach the ideal operating temperature.
- Windshield "Defrost" is activated.
- The A/C determines that the temperature inside the vehicle does not meet the target value.
- Battery power is less than 65%, or battery temperature is not within the ideal range (0 ~ 60℃).
- Hard acceleration or deceleration exhausts the brake vacuum.
- Frequent work of the starter in a short period (more than 3 times / min). Automatic stop function will be disabled for 1 min after continuous operation for five times.
- The vehicle is in R gear when parking or before parking.
- At the place where the altitude is more than 3000m.

Note: *When the vehicle will not be used for an extended period (more than 1 month), it is recommended to disconnect the cable from the negative terminal. When connecting or disconnecting the battery negative terminal, ensure the ignition switch is in "OFF" position. For vehicles with the intelligent stop/start energy saving system, after the battery negative terminal is reconnected, the battery shall be kept for at least 4 hours, and the engine will lose the automatic start/stop function before this operation.*

Note: *If the vehicle is running continuously for more than* **100** *hours, it shall be kept for at least* **4** *hours so that the battery state signal can return to normal state.*

Warning: *Failure to follow the above instruction will impair the battery performance and the intelligent* **stop/start** *energy saving system.*

Warning: *Please use the original accessories to replace the vehicle battery, otherwise, normal automatic start/stop of the engine cannot be guaranteed.*

Automatic Engine Start

After stopping the vehicle, the engine will be automatically started when the following operations of the driver are detected, and at this time the indicator lamp of the stop/ start energy saving system on the instrument is off:

- Vehicles with automatic transmission: with the transmission in D gear, release the brake pedal or with it in D gear, depress the brake/accelerator pedal, or shift to drive gear (R/D/S/W/Tiptronic).

Note: *In some cases, the malfunction indicator lamp on the instrument will illuminate in the process of automatic engine start. This is caused by low voltage during the starting process, it does not mean actual faults.*

Even if the driver does not have any operation, the engine will also start automatically upon demands of the vehicle after automatic stop:

- Windshield "Defrost" is activated.
- Activate the air conditioner which detects that the temperature inside the vehicle does not meet the target value.
- Battery power is less than 65%.
- Insufficient brake vacuum.
- The vehicle speed exceeds its limits, for example, when slipping on slopes.

www.cargeek.ir

- Press main switch of the intelligent stop/start energy saving system.

Note: *When the vehicle is in automatic start and stop control, if flameout of the engine occurs, when shifting to neutral gear, the engine will restart.*

Warning: *When charging/discharging the battery with external device, or starting the engine with external power, or supplying power for external device with the vehicle, the negative cable must be connected with body ground rather than directly connected with battery negative, otherwise, it will result in inaccurate calculation of the battery power and cause security problems when the engine starts automatically.*

Warning: *Never remove the battery sensor from the battery negative for several times, which will result in inaccurate calculation of the battery power and cause security problems when the engine starts automatically.*

In case of automatic shutdown or sudden flameout, the engine could only be started with a key when one of the following situations occurs:

- The driver seat belt is unfastened.
- The driver door is open.
- Engine hood is open.
- Intelligent stop/start energy saving system is closed.
- Automatic start fails since accidental flameout.

Warning: *Never tie the seat belt or insert the alternative steel into the buckle when the driver leaves his seat, for this may cause the vehicle engine to start automatically.*

Warning: *For automatic transmission vehicles, when the driver leaves the vehicle, please shift to* **P/N** *gear even if the engine has been shut down, otherwise, the vehicle may move.*

Warning: *The key must be removed to power off the vehicle when the service personnel open the hood to carry out static checking.*

Warning: *Even if the engine has been shut down, the key must be removed to power off the vehicle for refueling.*

Intelligent stop/start energy saving system failure

When the intelligent stop/start energy saving system fails, the instrument will show "stop/start failure" and the system will stop.

www.cargeek.ir

Malfunction		Items to be checked
No automatic stop	The instrument does not show any fault, and there is no automatic engine stop.	The system is enabled, and the switch indicator lamp illuminates.
		The vehicle speed displayed on the instrument is normal, the vehicle stops and the previous drive speed exceeds 10km/h.
		Vehicles with manual transmission: shift to N gear, and the clutch pedal is released. Vehicles with automatic transmission: shift to D gear, and the brake pedal is depressed.
		There is no large steering operation when the vehicle speed is less than 10km/h.
		Close the engine hood and driver door, fasten the driver seat belt.
		Engine water temperature is high (at the 4th segment or above)
		Check the specific disabling condition with the diagnostic tool:
		1.Front compartment open
		2. Driver absent
		3.Battery status disabled
		4. Insufficient brake vacuum
		5. A/C requirement
		6. Hot starter
		7. Diagnosis of N gear switch and clutch low switch unfinished
		8. Diagnosis of clutch high switch unfinished
		9. Diagnosis for stuck drive chain status relay unfinished
		10. Engine status not meet stop condition (for example, engine temperature, etc.)
		11. **TCM** not allow automatic engine stop
		12. **BCM** not allow automatic engine stop
		13. High altitude
		14. HHC not allow automatic engine stop
		15. Parking
		16. Brake master cylinder pressure not meet stop condition
	The instrument shows "stop/start failure", and there is no automatic engine stop.	Use the diagnostic tool to check **EMS** DTC and source of failure.
	The instrument displays the MIL (engine MIL, transmission MIL, ESP MIL), and there is no automatic engine stop.	Use the diagnostic tool to check the DTC and source of failure.
After automatic engine stop, there is no automatic engine start.	The instrument does not show any fault, and there is no automatic engine start.	Close the engine hood and driver door, fasten the driver seat belt.
		Vehicles with manual transmission: shift to N gear.
	The instrument shows "stop/start failure", and there is no automatic engine start.	Use the diagnostic tool to check **EMS** DTC and source of failure.
Accidental stop	Vehicles with manual transmission: shift to gears other than N gear, engine stops automatically.	Check N gear switch and its harness.
	Failure to turn off the intelligent stop/start energy saving system by button.	check the main switch and harness of the intelligent stop/start energy saving system.
1.0 Accidental start	Vehicles with manual transmission: shift to gears other than N gear, engine starts	Check N gear switch and its harness.

www.cargeek.ir

www.cargeek.ir

Test mode

After refitting the battery sensor to the battery, it shall be conditioned for at least 4 hours so that the accurate battery state information can be acquired. The engine will not stop automatically before completing this step.

If use the automatic stop function at this stage, please follow the following procedures, and the battery status will not disable the function for this operation:

1. Reconnect the key, but do not start the engine.
2. Depress the accelerator pedal and brake pedal to the the maximum travel, hold the main switch of the intelligent stop/start energy saving system for about 1s, then release both pedals.
3. Repeat step 2.
4. With the diagnostic tool, check if the status of the stop/start test mode is ON.

www.cargeek.ir

www.cargeek.ir

www.cargeek.ir

Service Procedures

Spark Plug

Remove

1. Disconnect the battery negative.
2. Remove the engine cover.
3. Remove the ignition coil.

☞ **Ignition Coil Remove**

4. Clean the area around the spark plug. Remove the dust around the spark plug with high pressure gas.
5. Remove 4 spark plugs with the spark plug socket.

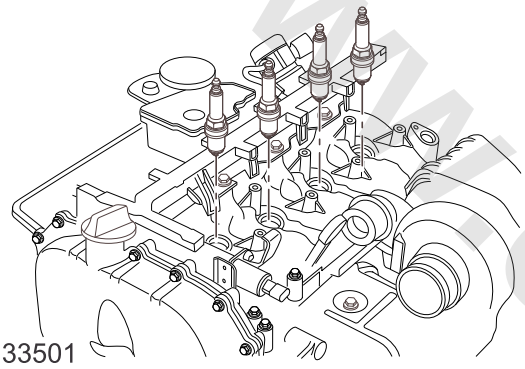

S1133501

Refit

1. The gap of each new spark plug shall be within 0.70—0.80mm.
2. Fit the spark plug and tighten it to **15-20Nm**.
3. Fit the ignition coil.

☞ **Ignition Coil Refit**

4. Fit the engine cover.
5. Connect the battery negative.

Ignition Coil

Remove

1. Disconnect the battery negative.
2. Remove the engine cover.
3. Disconnect the connector of the ignition coil (1).
4. Remove 2 bolts (2) fixing the ignition coil to the engine.

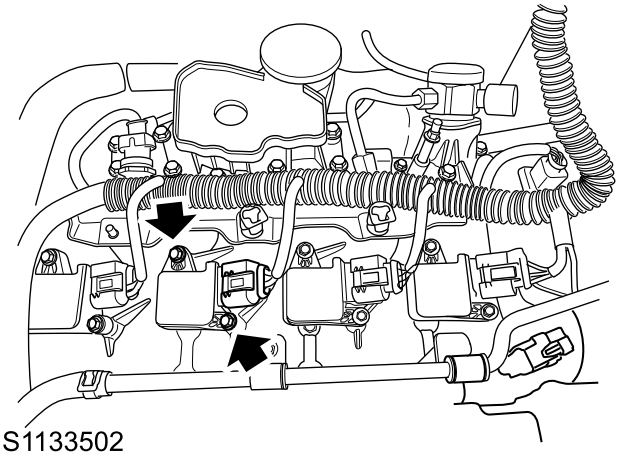

S1133502

5. Hold the rubber bush end of the ignition coil, and pull out the ignition coil from the spark plug (if it is hard to pull it out, rotate the ignition coil from left to right).
6. Repeat step 3 to 5 to remove other ignition coils.

Refit

1. Fit the ignition coil into the spark plug. When fitting the ignition coil, align the hole of the ignition coil with the bolt hole on the camshaft cover, and ensure the ignition coil is inserted into the spark plug. Fit 2 bolts, tighten to **7-10Nm** and check the torque.
2. Connect the ignition coil connector.
3. Repeat step 1 and 2 to fit other ignition coils.
4. Fit the engine cover.
5. Connect the battery negative.

www.cargeek.ir

Engine Control Module (ECM)

Remove

1. Disconnect the battery negative.
2. Remove 4 bolts fixing the **ECM** bracket to the firewall.

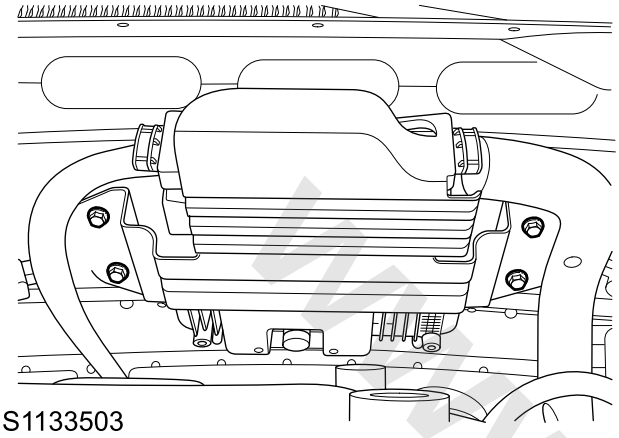

S1133503

3. Disconnect the connector from the **ECM**.

Caution: ECM*When disconnecting the connector, do not shake the connector forth and back or from side to side, avoid applying force to one side only or damaging the connector structure.*

4. Remove 4 nuts fixing the **ECM** to the firewall.

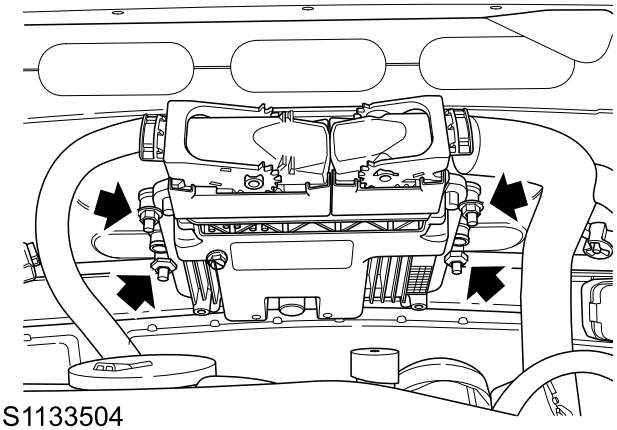

S1133504

Refit

1. Fix the **ECM** to the firewall, fit 4 nuts, tighten to **7–10Nm**, and check the torque.
2. Fix the wire harness and connect it to the **ECM** connector.

Caution: *When connecting the connector of the* **ECM,** *align the connector, insert the two ends with even effort. Never tilt it or attempt to fit it by applying force to one side only. If the connector is damaged, replace the engine harness.*

3. Fix the **ECM** bracket to the firewall, fit 4 bolts, tighten to **8–10Nm**, and check the torque.
4. Connect the battery negative.
5. Programme and code the **ECM**.

Self-learning and Adjustment, Programming and Coding - ECM Replacement

6. Perform self-learning for the electronic throttle.

Electronic Throttle Self-learning

7. Turn the ignition switch to ON position. Connect **VDS** and execute" ECM Adaption Reset " .
8. Wait the 2-5 seconds, turn off the ignition switch, then restart the vehicle .

www.cargeek.ir

www.cargeek.ir

ECT Sensor

Remove

1. Disconnect the battery negative.
2. Remove the coolant expansion tank cap to release the pressure of the cooling system, and fit the cap.

Warning: *Injury (such as scald) can be caused by the spilled vapor or coolant, so do not open the expansion tank cap when the cooling system is still hot.*

3. Remove the reservoir from the reservoir bracket.
4. Disconnect the ECT sensor connector.

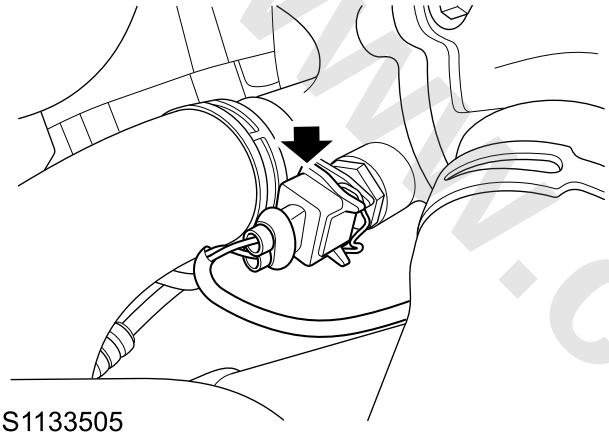

S1133505

5. Prepare a proper container to collect the spilled coolant.
6. Remove the ECT sensor and discard the seal ring.

Refit

1. Clean the thread of the coolant temperature sensor.
2. Fit the new seal washer to the coolant temperature sensor.
3. Fit the engine coolant temperature sensor and tighten to **14–18Nm**.
4. Connect the connector of the ECT sensor.
5. Fit the reservoir to the reservoir bracket.
6. Connect the battery negative.
7. Check the coolant level, refill if necessary.

Intake Camshaft Position Sensor

Remove

1. Disconnect the battery negative.
2. Remove the engine cover.
3. Disconnect the connector of the intake camshaft position sensor.
4. Remove 1 bolt fixing the intake camshaft position sensor to the cylinder block, and remove the sensor.

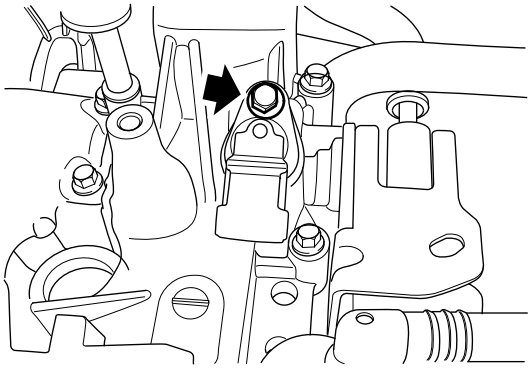

S1133506

Refit

1. Clean the mating surface of the intake camshaft position sensor and cylinder block.
2. Fix the intake camshaft position sensor to the cylinder block, fit 1 bolt, tighten to **9–11Nm**, and check the torque.
3. Connect the connector of the intake camshaft position sensor.
4. Fit the engine cover.
5. Connect the battery negative.
6. Turn the ignition switch to ON position. Connect **VDS** and execute" ECM Adaption Reset ".
7. Wait the 2-5 seconds, turn off the ignition switch, then restart the vehicle .

www.cargeek.ir

Exhaust Camshaft Position Sensor

Remove

1. Disconnect the battery negative.
2. Remove the engine cover.
3. Disconnect the connector of the exhaust camshaft position sensor.
4. Remove 1 bolt fixing the exhaust camshaft position sensor to the cylinder block, and remove the sensor.

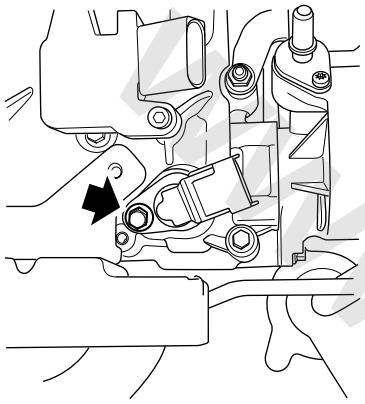

S163035

Refit

1. Clean the mating surface of the exhaust camshaft position sensor and cylinder block.
2. Fix the exhaust camshaft position sensor to the cylinder block, fit 1 bolt, tighten to **9–11Nm**, and check the torque.
3. Connect the connector of the exhaust camshaft position sensor.
4. Fit the engine cover.
5. Connect the battery negative.
6. Turn the ignition switch to ON position. Connect **VDS** and execute" ECM Adaption Reset " .
7. Wait the 2-5 seconds, turn off the ignition switch, then restart the vehicle .

Oil Pressure Switch

Remove

1. Disconnect the battery negative.
2. Remove the bottom deflector.

Bottom Deflector Remove

3. Place the oil sink under the switch to collect the spilled oil.
4. Disconnect the connector of the engine oil pressure switch.
5. Remove the oil pressure switch (1), and discard the gasket.

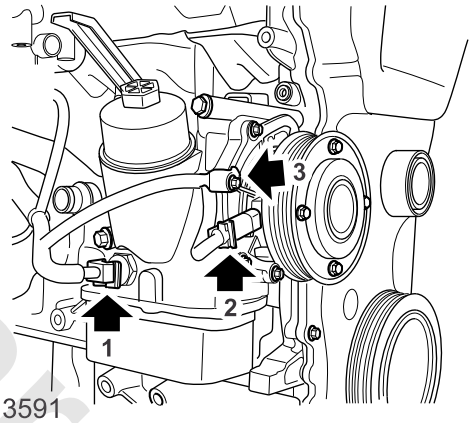

S1113591

Refit

1. Clean the thread of the oil pressure switch.
2. Fit the new seal ring to the oil pressure switch.
3. Fix the oil pressure switch to the oil filter module, tighten the switch to **14–18Nm** and check the torque.
4. Connect the oil pressure switch connector.
5. Remove the oil sink.
6. Fit the bottom deflector.

Bottom Deflector Refit

7. Connect the battery negative cable.
8. Check the engine oil level, and refill if necessary.

www.cargeek.ir

Hot Film Meter (HFM)

Remove

1. Disconnect the battery negative.
2. Disconnect the connector (1) of the air flow meter.
3. Release the clamp and disconnect the turbocharger intake pipe and air flow meter (2).

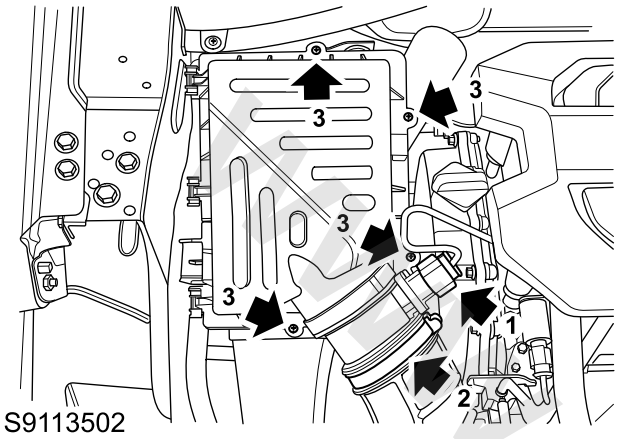

4. Remove 2 screws fixing the air flow meter to the upper air filter housing, and remove the air flow meter.

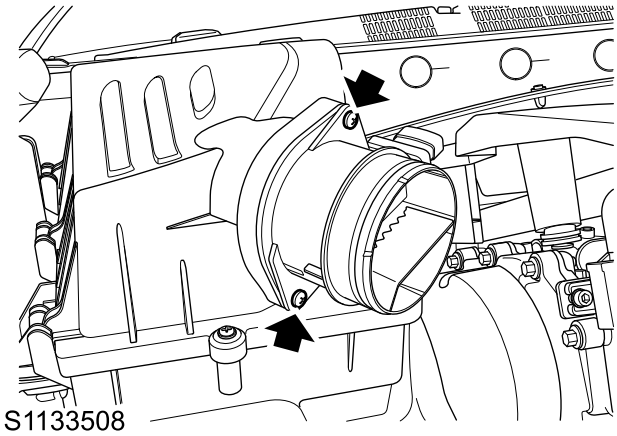

Refit

1. Fix the air flow meter to the upper housing of the air filter, fit 2 screws, tighten to **1.4–1.8Nm**, and check the torque.
2. Fit the turbocharger air inlet hose to the air flow meter, and secure with clamps.
3. Connect the connector of the air flow meter.
4. Connect the battery negative.

High-pressure Fuel Pump

Remove

Caution: *Before removing the high-pressure system, allow the vehicle to cool.*

1. Disconnect the battery negative.
2. Remove the engine cover.
3. Remove the shield of the high-pressure oil pump.

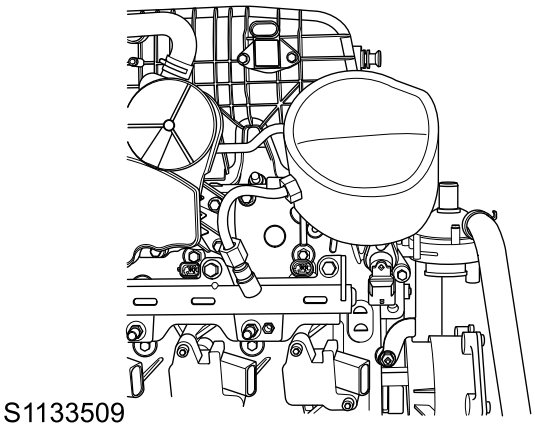

4. Place cloths with strong absorptivity around the high-pressure fuel pump to collect the spilled fuel.

Warning: Fuel vapour is highly flammable and in confined spaces is also explosive and toxic. Always have a fire extinguisher containing foam, CO2, gas or powder close

Warning: The spilling of fuel is unavoidable during this operation. Ensure that all necessary precautions are taken to prevent fire and explosion.

5. Unscrew the high-pressure pipe nut (1) on the high-pressure fuel pump (one or two circles), and release the nut completely after the fuel stop overflowing.
6. Take away the cloth from the high-pressure fuel pump and put it into a permissible container.

Caution: *Do not drip fuel onto the paint.*

7. Remove the high-pressure fuel pipe nut (2) from the fuel rail to release the high-pressure fuel pipe, and discard it.

Caution: Always fit plugs to open connections to prevent contamination.

www.cargeek.ir

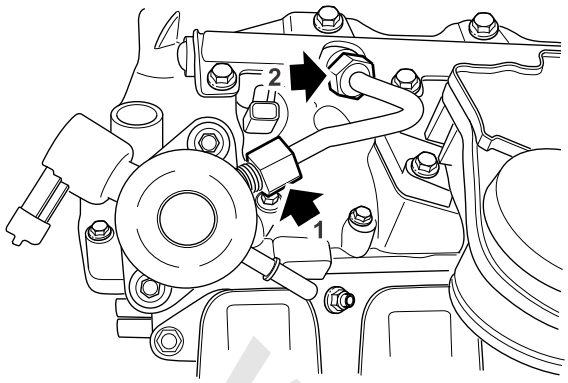

S1133510

8. Disconnect the connector of the high-pressure fuel pump.
9. Remove the low-pressure fuel pipe nut on the high-pressure fuel pump.

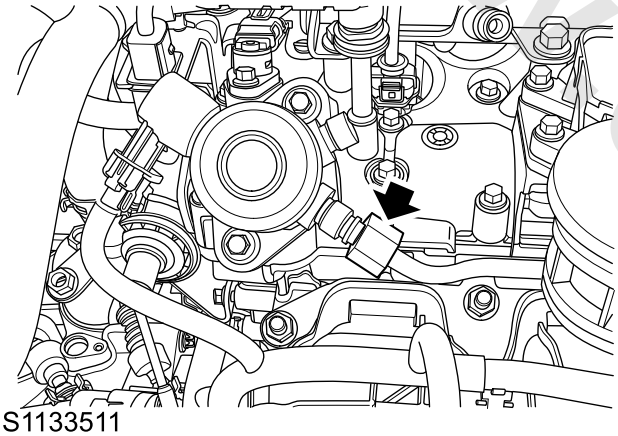

S1133511

10. Remove 2 bolts fixing the high-pressure fuel pump to the camshaft cover, remove the high-pressure fuel pump and discard the seal ring of the high-pressure fuel pump.

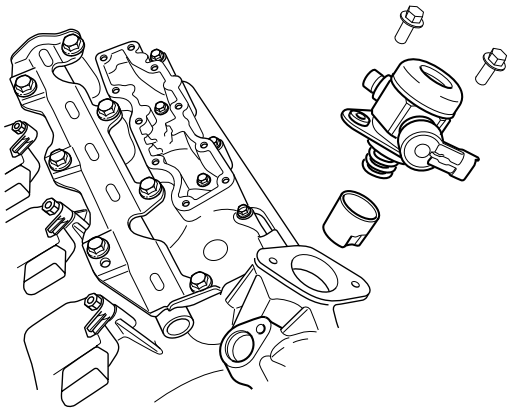

S1133512

11. Remove the high-pressure fuel pump and roller tappet.

Refit

1. Ensure the high-pressure fuel pump drive cam is located on he BDC.
2. Evenly apply engine oil to the cam, fuel pump seat hole and tappet.
3. Fit a new seal ring to the high-pressure fuel pump.
4. Fix the high-pressure fuel pipe to the camshaft cover, fit 2 bolts, tighten to **9-11Nm**, and check the torque.

Caution: *When tightening the fuel pump bolts, if the 2 bolts of any equipment shall be tightened to the specified torque or if no equipment needs to tighten the bolts repeatedly one by one, then do not tighten the bolt one after the other.*

5. Connect the low-pressure fuel pipe to the high-pressure fuel pump, tighten the nut to **20-24Nm** and check the torque.
6. Connect the connector of the high-pressure fuel pump.
7. Replace the high-pressure fuel pipe with a new one, for it is disposable.
8. Fix the high-pressure fuel pipe to the high-pressure fuel pump and fuel rail, tighten 1 nut connecting the high-pressure fuel pipe and the high-pressure fuel pump to **26-34Nm**, and tighten the other nut securing the high-pressure fuel pipe and fuel rail to **26–34Nm**, then check the torque.
9. Fit the shield of the high-pressure oil pump.
10. Fit the engine cover.
11. Connect the battery negative.

www.cargeek.ir

Fuel Rail Pressure Sensor

Remove

Caution: *Before removing the high-pressure system, allow the vehicle to cool.*

1. Disconnect the battery negative.
2. Remove the engine cover.
3. Disconnect the connector of the fuel rail pressure sensor.
4. Place cloths with strong absorptivity around the fuel rail pressure sensor to collect the spilled fuel.

Warning: Fuel vapour is highly flammable and in confined spaces is also explosive and toxic. Always have a fire extinguisher containing foam, CO2, gas or powder close

Warning: The spilling of fuel is unavoidable during this operation. Ensure that all necessary precautions are taken to prevent fire and explosion.

5. Before removing the fuel rail pressure sensor, keep the vehicle stationary for more than 2 hours, unscrew the fuel rail pressure sensor (less than half circle) until the fuel does not overflow.

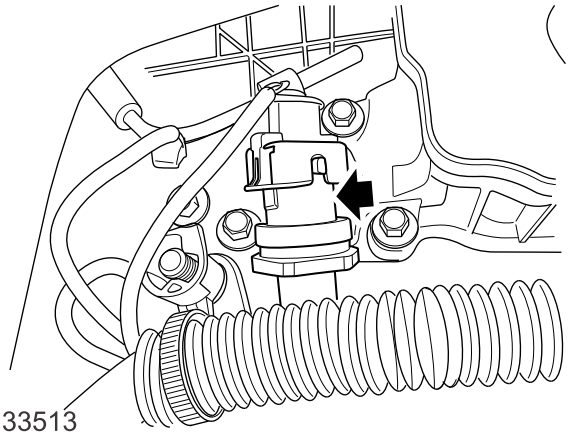

S1133513

6. Take away the cloth from the fuel rail pressure sensor and put it into an permissible container.

Caution: *Do not drip fuel onto the paint.*

Refit

1. Fix the fuel rail pressure sensor to the fuel rail, tighten to **30–35Nm** and check the torque.
2. Connect the connector of the fuel rail pressure sensor.
3. Fit the engine cover.
4. Connect the battery negative.

Crankshaft Position Sensor

Remove

1. Disconnect the battery negative.
2. Remove the starter motor.

☞ **Starter Motor Remove**

3. Disconnect the connector of the crankshaft position sensor.
4. Remove 1 bolt (1) fixing the crankshaft position sensor to the cylinder block, and remove the sensor.

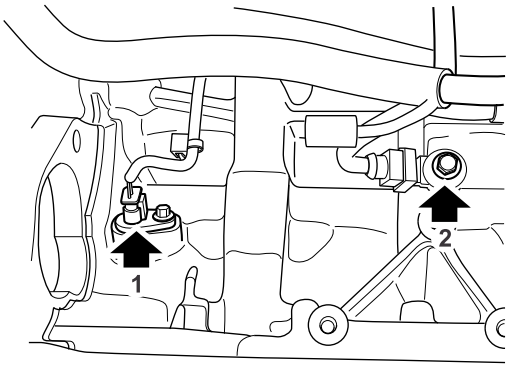

S1133514

Refit

1. Clean the mating surface of the crankshaft position sensor and cylinder block.
2. Fix the crankshaft position sensor to the cylinder block, fit 1 bolt, tighten to **9–11Nm**, and check the torque.
3. Connect the connector of the crankshaft position sensor.
4. Fit the starter motor.

☞ **Starter Motor Refit**

5. Connect the battery negative.
6. Turn the ignition switch to ON position. Connect **VDS** and execute" ECM Adaption Reset " .
7. Wait the 2-5 seconds, turn off the ignition switch, then restart the vehicle .

www.cargeek.ir

Intake Air Temperature/Manifold Absolute Pressure Sensor

Remove

1. Disconnect the battery negative cable.
2. Remove the engine cover.
3. Disconnect the connector of the TMAP sensor.
4. Release 2 screws fixing the TMAP sensor to the intake manifold and remove the sensor.

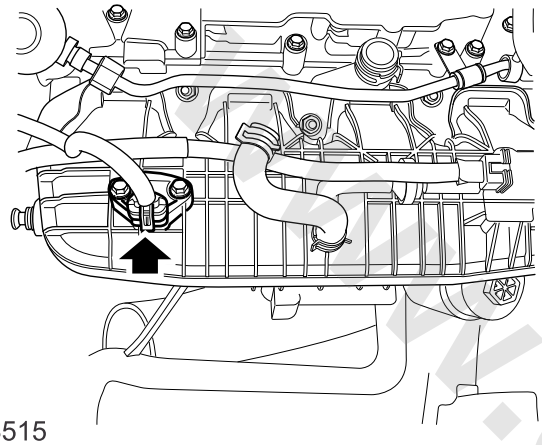

S1133515

Refit

1. Clean the mating face of the intake air temperature/manifold absolute pressure sensor and intake manifold.
2. Fit the intake air temperature/manifold absolute pressure sensor to the intake manifold and tighten the screw to **5–7Nm**.
3. Connect the connector of the intake air temperature/manifold absolute pressure sensor.
4. Fit the engine cover.
5. Connect the battery negative.

Manifold Absolute Pressure/Temperature Sensor

Remove

1. Disconnect the battery negative.
2. Disconnect the connector of the manifold absolute pressure sensor.
3. Release 2 screws fixing the manifold absolute pressure sensor to the throttle intake pipe and remove the sensor.

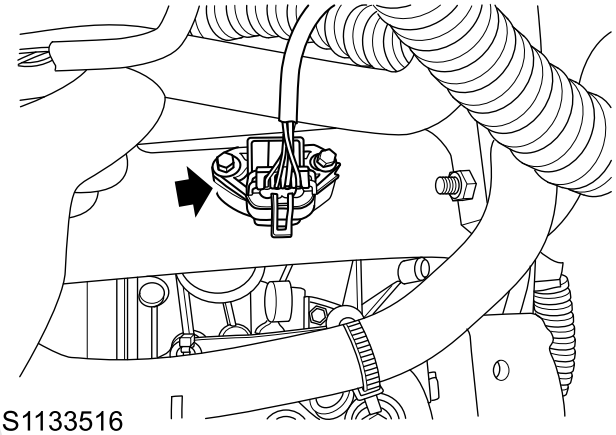

S1133516

Refit

1. Clean the mating face of the manifold absolute pressure sensor and throttle intake pipe.
2. Fit the manifold absolute pressure sensor to the throttle intake pipe and tighten the screw to **5–7Nm**.
3. Connect the connector of the manifold absolute pressure sensor.
4. Connect the battery negative.

www.cargeek.ir

Knock Sensor

Remove

1. Disconnect the battery negative.
2. Raise the vehicle on a lift.

Warning: Do not work on or under a vehicle supported only by a jack. Always support the vehicle on safety stands.

3. Disconnect the knock sensor connector.

Warning: Exhaust components get extremely hot during operation. Ensure exhaust components are sufficiently cooled before handling.

4. Remove 1 bolt (2) fixing the knock sensor to the cylinder block, and remove the knock sensor.

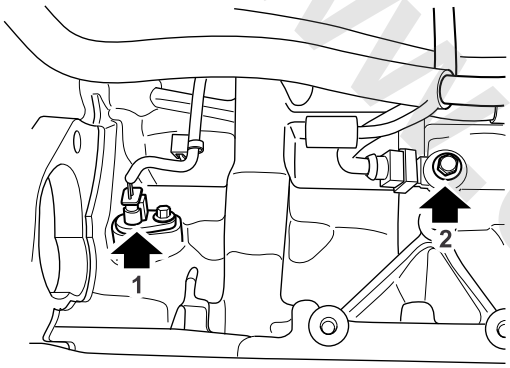

S1133514

Refit

1. Clean the mating surface of the knock sensor and cylinder block.
2. Fix the knock sensor to the cylinder block, fit 1 bolt, tighten to **15–25Nm**, and check the torque.
3. Connect the knock sensor connector.
4. Lower the vehicle.
5. Connect the battery negative.

Heated Oxygen Sensor - Front

Remove

1. Disconnect the battery negative.
2. Remove the engine cover.
3. Remove the front oxygen sensor connector from the connector bracket of the front oxygen sensor.
4. Disconnect the front oxygen sensor connector.
5. Remove the front oxygen sensor from the front three-way catalytic converter with the **TEN00011**.

Warning: Exhaust components get extremely hot during operation. Ensure exhaust components are sufficiently cooled before handling.

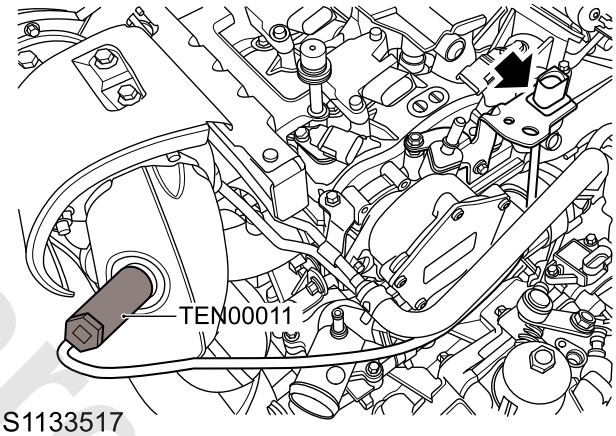

S1133517

Refit

1. Clean the mating face of the front oxygen sensor and front exhaust pipe.
2. Apply high temperature antiwelding agent to the thread of the front oxygen sensor, fit the front oxygen sensor to the three-way catalytic converter with the the **TEN00011**, tighten to **45–60Nm** and check the torque.
3. Connect the front oxygen sensor connector.
4. Fit the front oxygen sensor connector to the connector bracket of the front oxygen sensor.
5. Fit the engine cover.
6. Connect the battery negative.

www.cargeek.ir

Heated Oxygen Sensor - Rear

Remove

1. Disconnect the battery negative.
2. Raise the vehicle on a lift.

Warning: Do not work on or under a vehicle supported only by a jack. Always support the vehicle on safety stands.

3. Remove the bottom deflector.

☞ **Bottom Deflector Remove**

4. Remove the rear oxygen sensor connector from the connector bracket of the rear oxygen sensor.
5. Disconnect the rear oxygen sensor connector.
6. Remove the rear oxygen sensor from the front exhaust pipe with the **TEN00011**.

Warning: Exhaust components get extremely hot during operation. Ensure exhaust components are sufficiently cooled before handling.

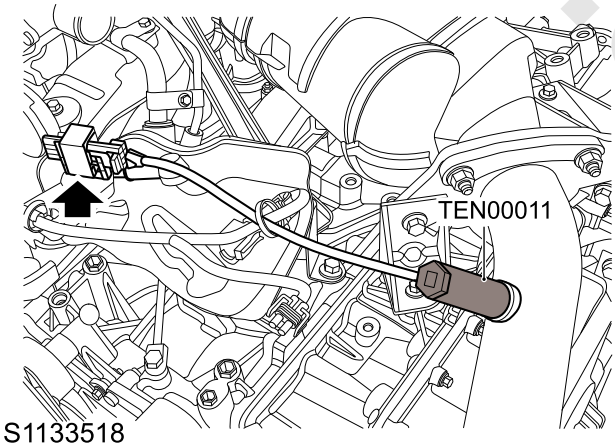

Refit

1. Clean the mating face of the rear oxygen sensor and rear exhaust pipe.
2. Apply high temperature antiwelding agent to the thread of the rear oxygen sensor. Fit the rear oxygen sensor to the front exhaust pipe with the **TEN00011**, tighten to **45–60Nm**, and check the torque.
3. Connect the rear oxygen sensor connector.
4. Fit the rear oxygen sensor connector to the connector bracket of the rear oxygen sensor.
5. Fit the bottom deflector.

☞ **Bottom Deflector Refit**

6. Lower the vehicle.
7. Connect the battery negative.

Turbocharger Solenoid Valve

Remove

1. Disconnect the battery negative.
2. Note the hose connection on the solenoid valve and disconnect 3 hoses.
3. Disconnect the connector of the solenoid valve.
4. Release 2 bolts fixing the turbocharger solenoid valve to the bracket, and remove the solenoid valve.

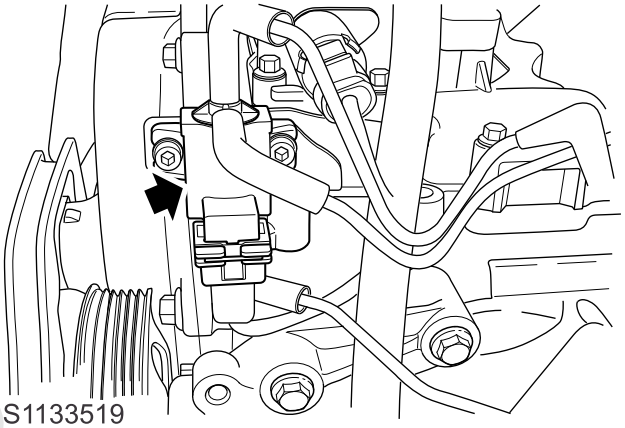

Refit

1. Fix the solenoid valve to the bracket, fit 2 bolts, tighten to **2.5–3.5Nm**, and check the torque.
2. Connect the connector of the solenoid valve.
3. Connect 3 hoses to the solenoid valve correctly.
4. Connect the battery negative cable.

www.cargeek.ir

Fuel Rail

Remove

Caution: *Before removing the high-pressure system, allow the vehicle to cool.*

1. Disconnect the battery negative.
2. Remove the engine cover.
3. Remove the shield of the high-pressure oil pump.

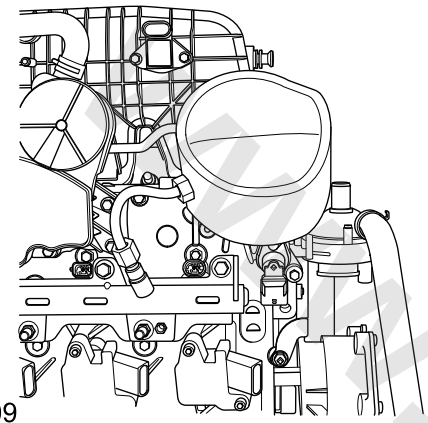

S1133509

4. Place cloths with strong absorptivity around the high-pressure fuel pump to collect the spilled fuel.

Warning: Fuel vapour is highly flammable and in confined spaces is also explosive and toxic. Always have a fire extinguisher containing foam, CO2, gas or powder close

Warning: The spilling of fuel is unavoidable during this operation. Ensure that all necessary precautions are taken to prevent fire and explosion.

5. Unscrew the high-pressure pipe nut (1) on the high-pressure fuel pump (one or two circles), and release the nut completely after the fuel stop overflowing.

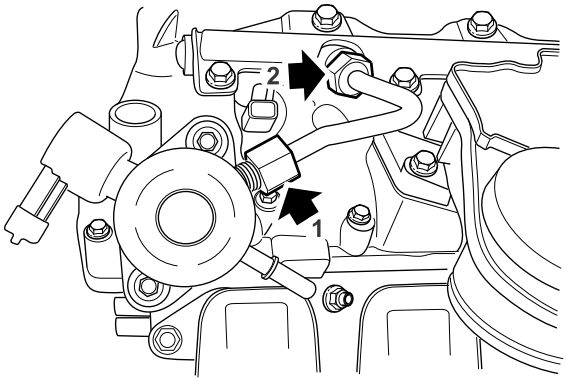

S1133510

6. Take away the cloth from the high-pressure fuel pump and put it into a permissible container.

Caution: *Do not drip fuel onto the paint.*

7. Remove the high-pressure fuel pipe nut on the fuel rail and remove the high-pressure fuel pipe.

Caution: *Plug the connector disconnected to prevent contaminants.*

8. Disconnect the connector of the injector nozzle, high-pressure sensor, intake camshaft oil control valve and front oxygen sensor.
9. Remove the engine harness clip from the fuel rail bolt.

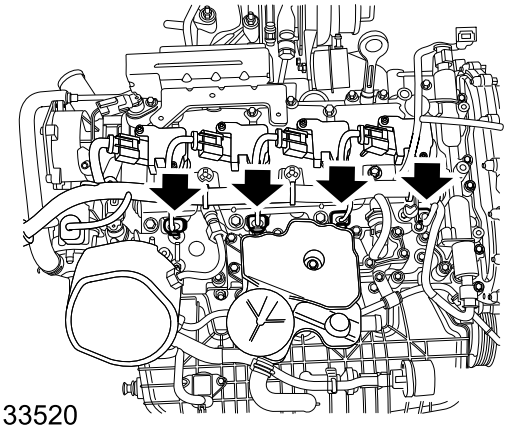

S1133520

10. Remove 7 bolts fixing the fuel rail to camshaft cover in the sequence shown.

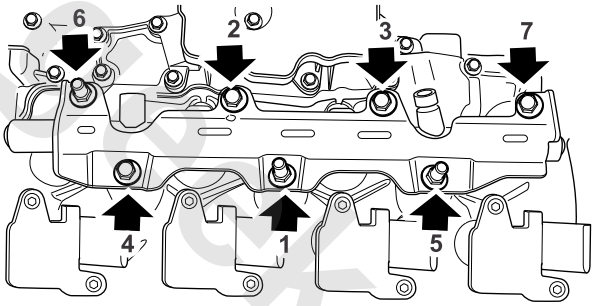

S1133522

11. Remove the fuel rail assembly.

Refit

1. If the injector is disconnected from the fuel rail, replace all seal rings and spring clips of the injector; if it is not disconnected, replace the seal ring of the combustion chamber only.
2. Fit the fuel rail, ensure the injector will not contact the camshaft cover, fit 7 bolts and pre-tighten the bolt.
3. Tighten the bolts to **23-27Nm** in the sequence shown and check the torque.

Caution: *When tightening the fuel rail bolt, if the bolt of any equipment shall be tightened to the specified torque or if there is no equipment, tighten from outside bolt to inside bolt.*

www.cargeek.ir

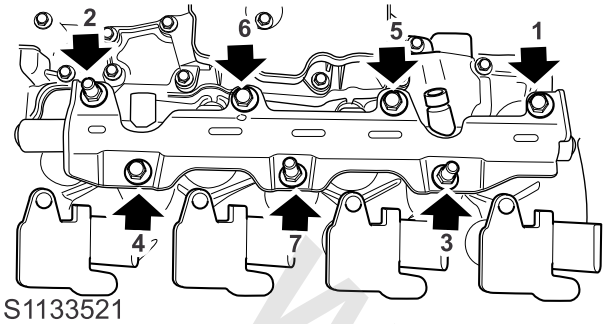

4. Fit the engine harness clip to the fuel rail bolt.
5. Connect the connector of the injector nozzle, high-pressure sensor, intake camshaft oil control valve and front oxygen sensor.
6. Replace the high-pressure fuel pipe with a new one, for it is disposable.
7. Fix the high-pressure fuel pipe to the high-pressure fuel pump and fuel rail, tighten 1 nut connecting the high-pressure fuel pipe and the high-pressure fuel pump to **26-34Nm**, and tighten the other nut securing the high-pressure fuel pipe and fuel rail to **26–34Nm**, then check the torque.
8. Fit the shield of the high-pressure oil pump.
9. Fit the engine cover.
10. Connect the battery negative.

Injector

Remove

1. Disconnect the battery negative.
2. Remove the fuel rail assembly.

☞ **Fuel Rail Assembly Remove**

3. Remove the spring clip from the fuel injector.
4. Remove the fuel injector with the **TEN00121**.

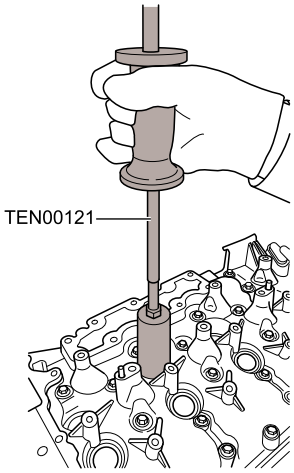

S1133523

5. Remove and discard the fuel injector seal ring.
6. Fit the block cap to the end of each fuel injector.

Refit

1. Remove the block cap from each fuel injector.
2. Clean the groove of the fuel injector and fuel rail.
3. Fit the fuel injector seal rings to the steering tool of the **TEN00064**, then fit the fuel injector seal rings to the fuel injector with the **TEN00064**, and fit the fuel injector seal rings in sequence.

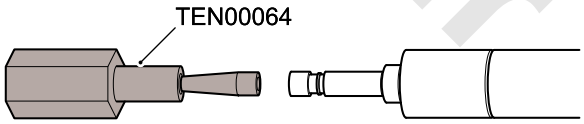

S1133580

4. Replace the spring clip, and fit the new clip to the injector nozzle.
5. Fit the fuel injector to the fuel rail assembly.

☞ **Fuel Rail Assembly Remove**

6. Fit the fuel rail assembly with injector to the cylinder head.
7. Connect the battery negative.

www.cargeek.ir

Canister Solenoid

Remove

1. Disconnect the battery negative.
2. Remove the engine cover.
3. Disconnect the connector of the activated carbon canister solenoid valve.
4. Loosen the clamps, and disconnect the two pipes connecting the activated carbon canister solenoid valve.

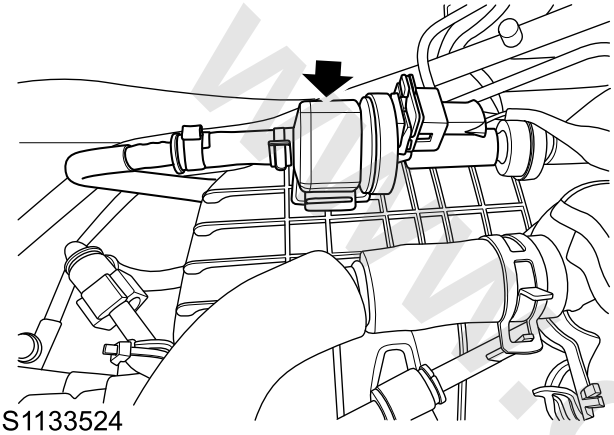

S1133524

5. Remove the activated carbon canister solenoid valve from the bracket.
6. Remove 1 bolt fixing the bracket of the activated carbon canister solenoid valve to the intake manifold and remove the bracket.

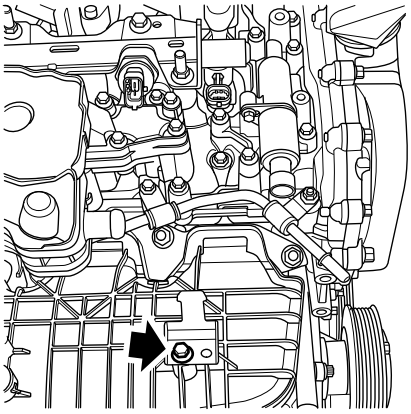

S1133525

Refit

1. Fix the activated carbon canister solenoid valve bracket to the intake manifold, fit 1 bolt, tighten to **9–11Nm** and check the torque.
2. Fit the activated carbon canister solenoid valve to the bracket.
3. Connect the 2 pipes of the activated carbon canister solenoid valve and secure them with clamps.
4. Connect the connector of the activated carbon canister solenoid valve.
5. Fit the engine cover.
6. Connect the battery negative.

www.cargeek.ir

Special Tools

Tool Number	Description	Picture
TEN00011	Wrench O2 sensor	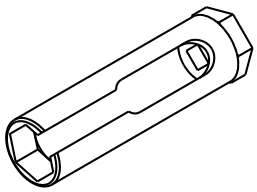 TEN00011
TEN00121	Injector remove tool	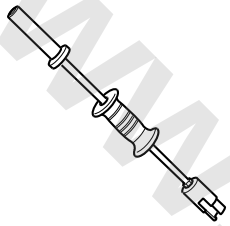 TEN00121
TEN00064	Injector seal installer and sizer	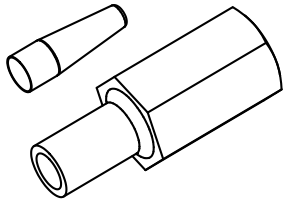 TEN00064

www.cargeek.ir

www.cargeek.ir

Engine Control System-1.5T

Specifications

Torque

Description	Value
Bolt-fuel pump to engine	21–29Nm
Bolt-fuel pump bracket to engine	19–25Nm
Nut-fuel rail	28–32Nm
Bolt-fuel rail assembly to injector	4–6Nm
Bolt-fuel rail assembly to engine	9–11Nm
Bolt-Spark Plug ASM	20Nm
nuts -ECM to body	7–10Nm
nuts and bolts -ECM bracket to body	8–10Nm
Bolt-coil to engine	8–12Nm
Bolt-crank sensor	8–12Nm
Bolt-MAP	4–6Nm
Bolt-CAM	8–12Nm
Bolt-the camshaft phase adjust the solenoid valve	8–12Nm
Bolt-oil pressure sensor	31–39Nm
Bolt-knock sensor	16–24Nm
Bolt-oxygen sensor	40–60Nm
Bolt-After oxygen sensor bracket to transmission	14-18Nm
Bolt-emissions control valve	4–6Nm
Bolt-emissions pressure relief valve	8–10Nm
Bolt-TMAP sensor	3–4Nm
Bolt- expansion tank to body	4–6Nm

Parameter

Engine Management System (-1.5)

Emissions standard	GB V
Spark plug: Manufacturer Clearance	 Federal-Mogul Corporation 0.6-0.7 mm
Ignition coil: Manufacturer Model	 Mitsubishi Electric CSGE
Fuel injection system: Model: Nozzle: Operating pressure: Static flow rate of nozzle:	 Direct fuel injection system, returnless 4x XL3 20 MPa 9 g/s±5% @ 10MPa

www.cargeek.ir

Sensor −1. 5T

Crankshaft Position Sensor	
Manufacturer	Ivy engine parts (Wuhan) co., LTD
Part Number	12638560
Camshaft position sensor:	
Manufacturer	Denso (China) Investment Co., Ltd. Shanghai Branch (DENSO)
Part Number	12636947
Oxygen Sensor	
Manufacturer/model	UMC LSF 4.2 TSP
heating element (nominal valve)	7 W
Sensor voltage - high	1v
Sensor voltage - Low	0v
Electronic Throttle	
Manufacturer	Continental (Wuhu)
Coolant Temperature Sensor	
Manufacturer/model	INZI/NTC
TMAPSensor	
Manufacturer	Denso (China) Investment Co., Ltd. Shanghai Branch (DENSO)
Sensor supply voltage	5V/-0.25V

www.cargeek.ir

www.cargeek.ir

Fuel System-1.5T

System	Direct fuel injection system, returnless
Fuel Specifications	92# or above quality unleaded gasoline
Fuel Rail	Stainless Steel Tube Structure
Nozzle:	4x XL3
Static flow rate of nozzle	9 g/s±5% @ 10MPa
Dynamic flow rate of nozzle	3.3 mg/pulse±5% @ 4MPa
Fuel pump (High pressure)	Camshaft drive, fuel supply of fuel pump controlled by solenoid valve
Oil Pressure	20 MPa
Oil Pressure Adjustment	The high pressure fuel pump solenoid valve adjusts the oil pressure by controlling the fuel supply.

www.cargeek.ir

www.cargeek.ir

Description and Operation

System Layout

Sensor Layout

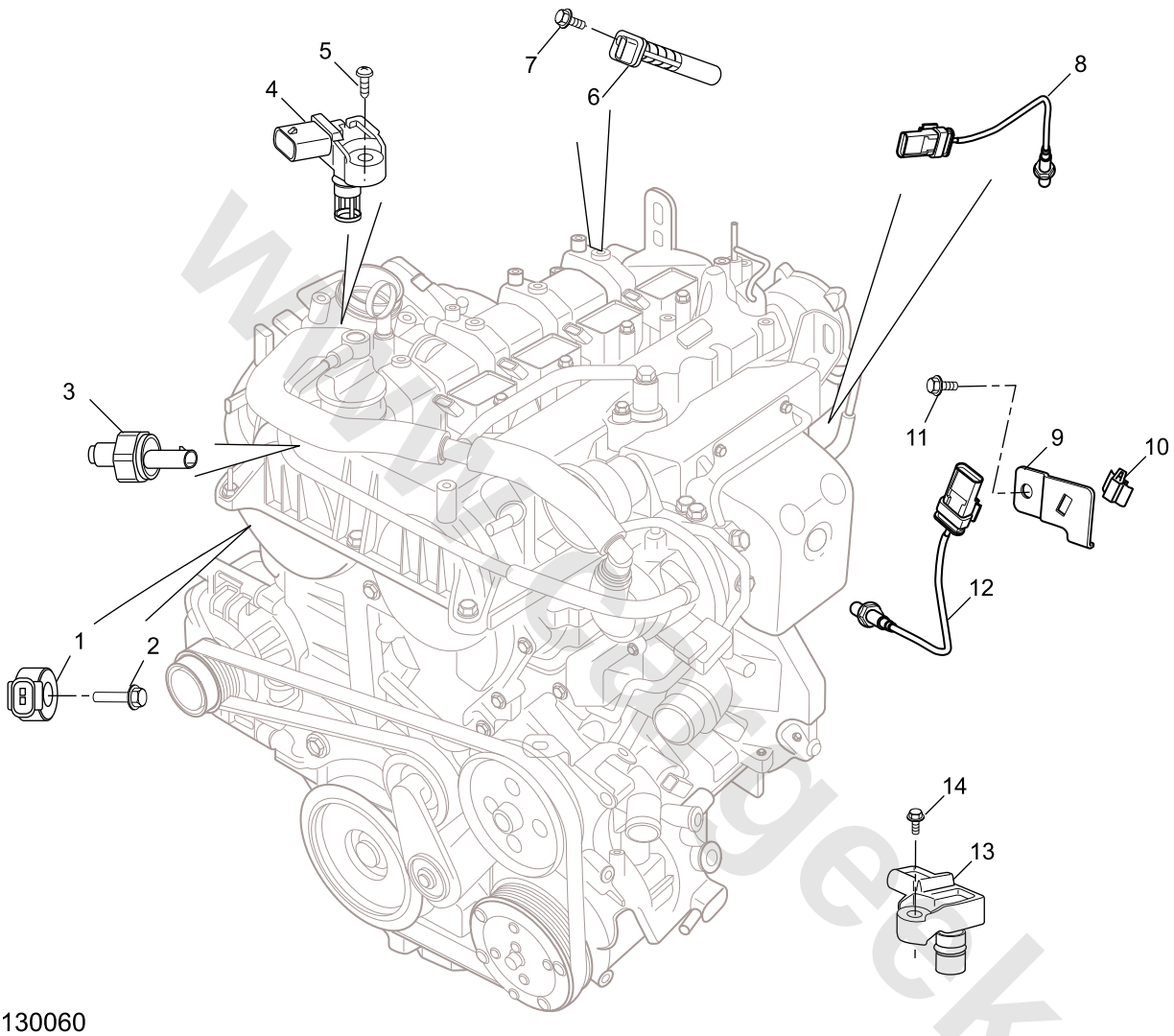

S1130060

1. Knock Sensor
2. Screw - Knock Sensor
3. Oil Pressure Sensor
4. Manifold Absolute Pressure Sensor
5. Screw - Manifold Absolute Pressure Sensor
6. Crankshaft Sensor
7. Screw - Crankshaft Sensor
8. Front Oxygen Sensor
9. Front Oxygen Sensor Bracket Assembly
10. Clip - Oxygen Sensor
11. Screw - Rear Oxygen Sensor Bracket)
12. Rear Oxygen Sensor
13. Intake Air Temperature/Pressure Sensor
14. Bolt - Intake Air Temperature/Pressure Sensor

www.cargeek.ir

Exploded View of Ignition Module Spark Plug

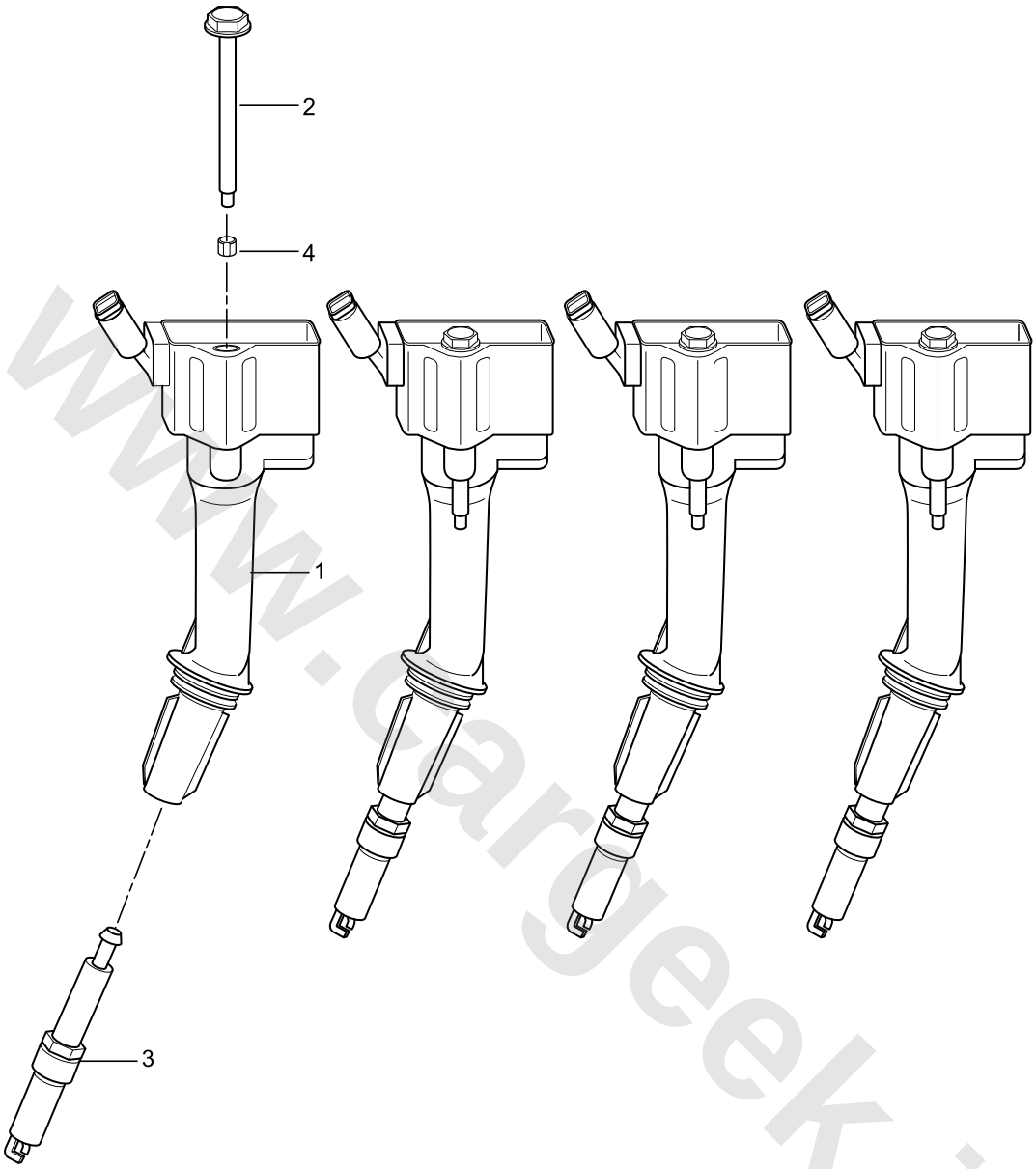

S1110131

1. Ignition Coil Assembly
2. Screw - Ignition Coil
3. Spark Plug Assembly
4. Fixing Sleeve - Ignition Coil Bolt

www.cargeek.ir

www.cargeek.ir

Exploded View of Injector Fuel Rail

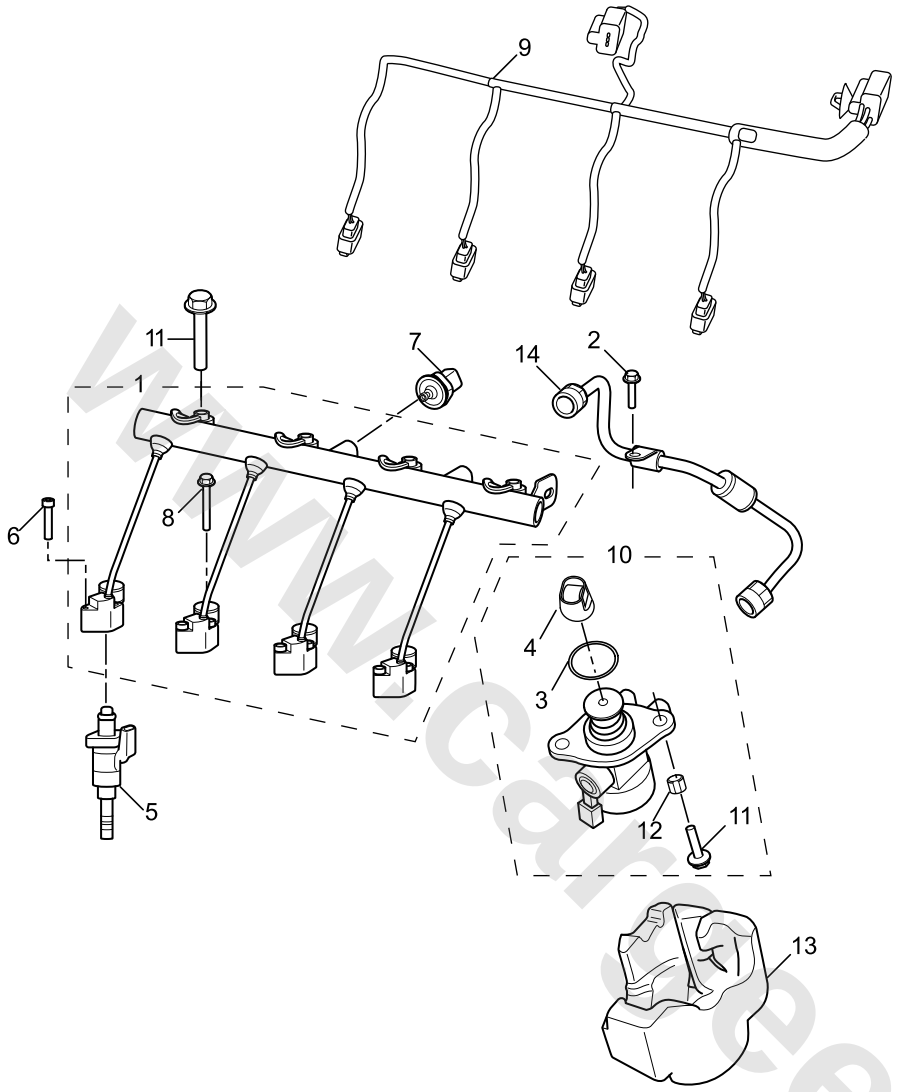

S1110132

1. Fuel Rail
2. Bolt - Engine Fuel Inlet Pipe Bracket
3. O-ring - Engine Fuel Pump
4. Engine Fuel Pump Tappet
5. Fuel Injector Assembly
6. Bolt - Fuel Injector Retaining Plate
7. Sensor - Fuel Rail Fuel Pressure
8. Bolt - Fuel Rail
9. Engine Injector Harness
10. Engine High Pressure Fuel Pump
11. Bolt - Engine Fuel Pump
12. Fixing Sleeve - Fuel Pump Bolt
13. Fuel Pump Silencer
14. Engine High Pressure Fuel Pipe

www.cargeek.ir

System Control Diagram

Engine Control System Control Diagram

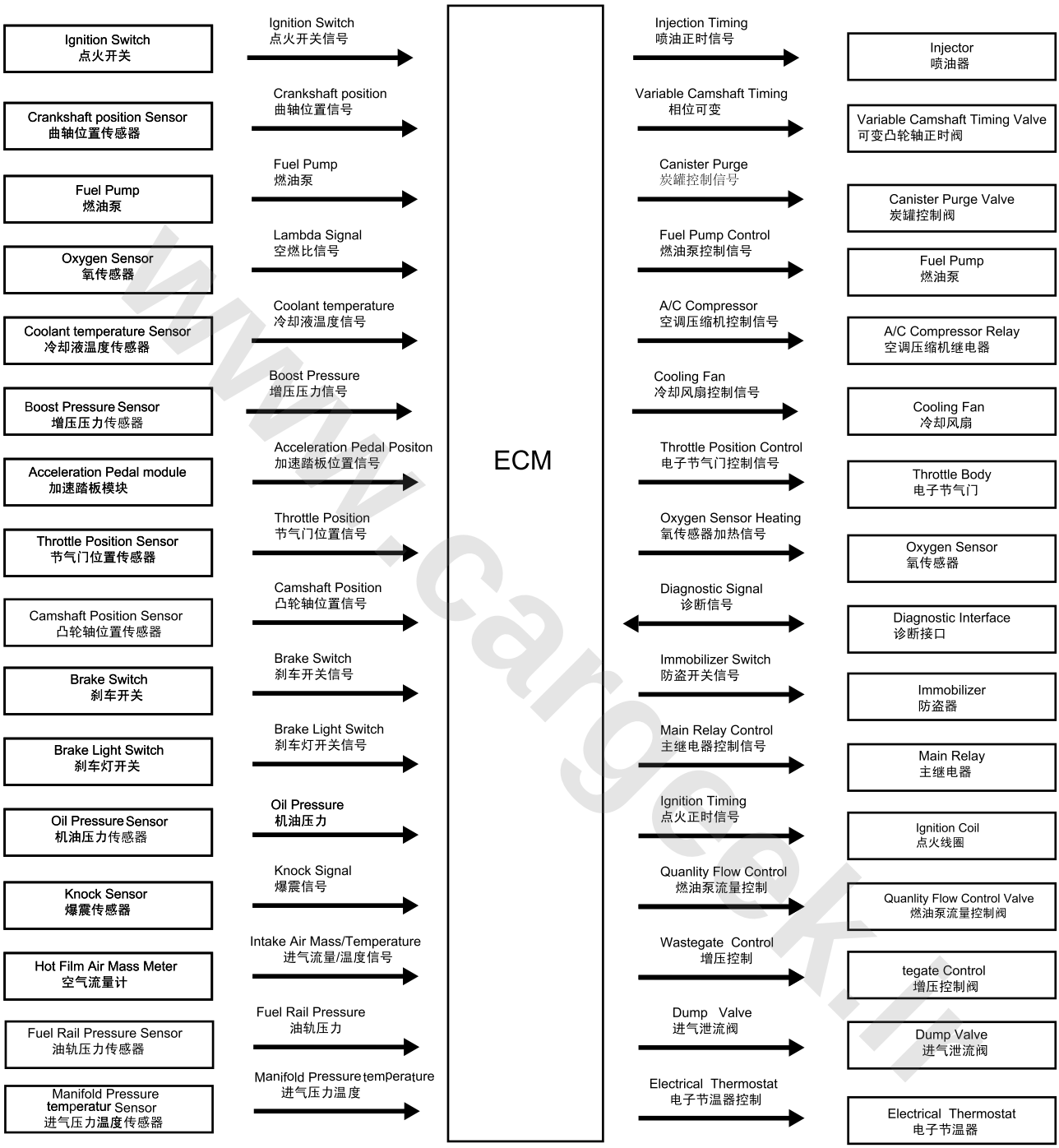

www.cargeek.ir

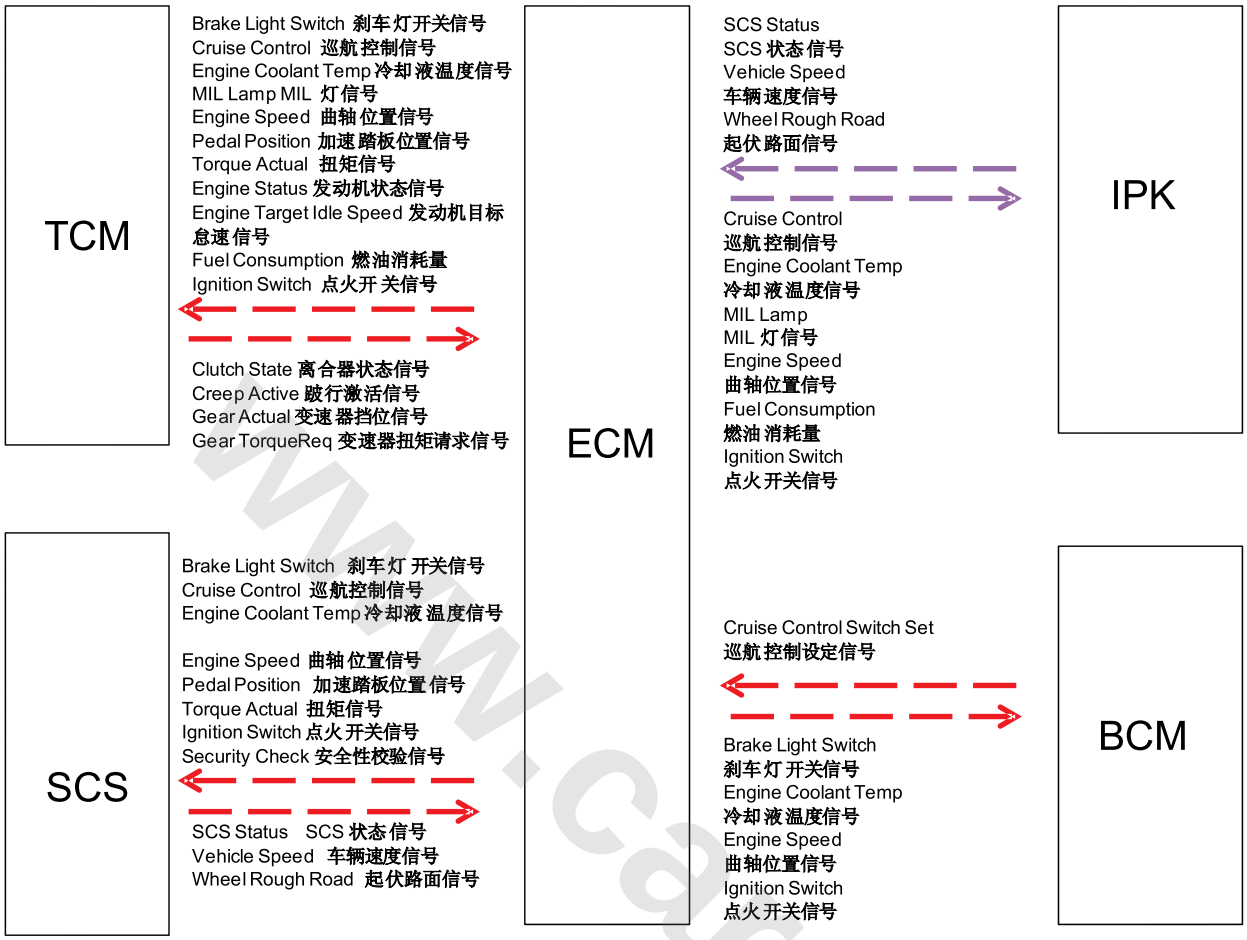

*A= HS **CAN** Bus; B= Medium Speed **CAN** Bus;*

www.cargeek.ir

Description

Overview

The engine management system mainly consists of sensor, microprocessor (**ECM**) and actuator, used for controlling the air inflow, fuel injection quantity and ignition advance angle when the engine is working. This engine uses BOSCH MED17 **ECM**. MED17 engine electronic control system has the main characteristics of: accurate measurement of fuel injection quantity; generation of required injection pressure; determination of injection starting point; direct and accurate fuel injection into combustion chamber. The system must also coordinate different torque requirements in turn, and then adjust the engine functioning according to the final requirement. Torque adjustment is the central task of the engine management system, the most important torque requirement comes from the accelerator pedal controlled by the vehicle driver, and the engine management system generates a specific torque according to the position of the accelerator pedal; in addition, further torque requirements can also come from: transmission shift control, traction control system and electronic stability control system. The intentions of the engine management system control are to: enhance power performance, reduce fuel consumption and exhaust pollution.

Engine Control Unit (ECM)

The engine control module is the control center of fuel injection system. It monitors continuously the information from various sensors, controls various systems influencing the vehicle performance. It also executes system diagnosis function. It is able to identify the operation fault, reminds the driver with malfunction indicator lamp (**MIL**) and stores the DTC at indication fault position to facilitate the repair of the service personnel.

ECMWiring Harness Connector End View

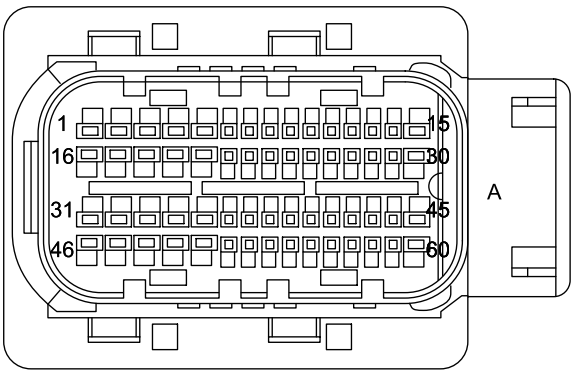

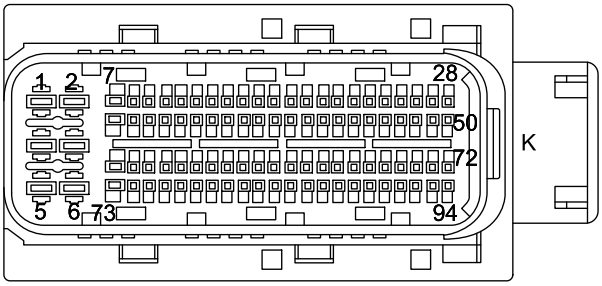

Detailed Information List of Connector Pins

Pin No.	Description
A01	Cylinder 4 Ignition
A02	Cylinder 2 Ignition
A03	Fuel Control Valve -
A04	Fuel Control Valve +
A05	VVT Valve (Exhaust)
A06	—
A07	5V Power Supply
A08	Sensor Ground
A09	—
A10	Knock Sensor -
A11	—
A12	5V Power Supply
A13	Sensor Ground
A14	Sensor Ground
A15	—
A16	Cylinder 1 Ignition
A17	Cylinder 3 Ignition
A18	Discarded Control Valve
A19	Electronic Throttle +
A20	Electronic Throttle -
A21	—
A22	Sensor Ground
A23	Engine speed sensor (Hall)
A24	—
A25	Knock Sensor +
A26	—
A27	5V Power Supply
A28	—
A29	5V Power Supply

www.cargeek.ir

A30	—
A31	Cylinder 1 Injection +
A32	Cylinder 4 Injection +
A33	Cylinder 1 Injection -
A34	Cylinder 3 Injection -
A35	Canister control valve
A36	—
A37	—
A38	IAT sensor
A39	Intake Air Pressure Sensor
A40	Fuel Rail Pressure Sensor
A41	—
A42	Alternator Load Signal
A43	—
A44	—
A45	—
A46	Cylinder 3 Injection +
A47	Cylinder 2 Injection +
A48	Cylinder 4 Injection -
A49	Cylinder 2 Injection -
A50	VVT Valve (Intake)
A51	—
A52	—
A53	Phase Position Sensor (Intake)
A54	Phase Position Sensor (Exhaust)
A55	Oil Pressure Sensor
A56	Ambient Temperature Sensor
A57	Water temperature sensor
A58	Hot Film Air Flow Signal (HFM7)
A59	Hot-film Air flow Meter Sensor Ground
A60	Electronic Thermostat
K01	ECU Ground 1
K02	ECU Ground 2
K03	Main Relay Power 1
K04	ECU Ground 3
K05	Main Relay Power 2
K06	Main Relay Power 3
K07	—
K08	Intake Bleeder Valve

K09	—
K10	—
K11	Sensor Ground
K12	—
K13	—
K14	Sensor Ground
K15	—
K16	—
K17	Sensor Ground
K18	—
K19	Brake Lamp Switch
K20	A/C Request
K21	Brake Switch
K22	P/N Signal
K23	—
K24	—
K25	—
K26	Cooling Fan Relay 3
K27	Cooling Fan Relay 1 and 2
K28	Low-pressure Fuel Pump Relay
K29	Downstream oxygen sensor heater
K30	Continuity power supply
K31	Starter Motor Relay
K32	—
K33	Oxygen Sensor Ground
K34	Oxygen Sensor Ground
K35	Sensor Ground
K36	—
K37	—
K38	Speed outputs to TCM
K39	—
K40	—
K41	—
K42	A/C compressor relay
K43	Clutch low-position switch (only MT)
K44	CAN low
K45	Refresh with CAN high
K46	Neutral Switch (only MT)
K47	—
K48	Starter Feedback Signal

www.cargeek.ir

K49	Reverse Gear Switch Signal (only MT)
K50	Clutch high-position switch (only MT)
K51	—
K52	Sensor Ground
K53	—
K54	Throttle position signal
K55	—
K56	—
K57	—
K58	5V Power Supply
K59	5V Power Supply
K60	A/C Pressure Sensor
K61	Accelerator Pedal Position Sensor 2
K62	Downstream oxygen sensor
K63	Boost Pressure Sensor
K64	—
K65	—
K66	—
K67	—
K68	—
K69	Main relay
K70	—
K71	Oil control valve
K72	—
K73	Upstream oxygen sensor heater
K74	—
K75	—
K76	—
K77	—
K78	—
K79	—
K80	—
K81	5V Power Supply
K82	5V Power Supply
K83	Accelerator Pedal Position Sensor 1
K84	Upstream oxygen sensor signal
K85	ACC Wake-up Signal
K86	—
K87	Ignition Switch
K88	—
K89	—
K90	—
K91	—
K92	—
K93	—
K94	—

The engine management system is composed of the following 6 components according to control principle:

- External control
- Supply control system
- Ignition control system
- Fuel supply control system
- Auxiliary 1 (Heat Management)
- Auxiliary 2 (outside assistance)

External control

Outside control of the engine mainly includes:

- Main relay
- Ignition Switch
- Battery
- **CAN**Communication
- Immobilizer Power Supply

The outside control mainly refers to the power supply and communication. One line of power supply of the engine control unit (**ECM**) is directly connected to power supply through fuse EF23 to ensure **ECM** is in powered state. When the ignition switch is at ON or IGN position, the engine control unit can control the opening of the main relay or connect to ignition power supply.

The engine management system can communicate with controllers of other nodes on the network through **CAN** to ensure each performance of the system. It can also be connected with the data link connector (DLC), to facilitate the diagnostic operation of the service personnel.

Main Relay Control

ECMEngage the main relay after receiving the ignition signal, the main relay supplies power to the throttle, many sensors and actuators. At the same time, **ECM** monitors the system voltage through relay voltage.

Failure

The main relay may have failures occurred under the following conditions:

- The relay winding short-circuited
- The relay winding open-circuit

www.cargeek.ir

- The relay winding high resistance
- Relay contact normally open
- Relay contact normally closed
- Relay contact high resistance
- Relay harness open-circuit
- Relay harness high resistance
- Relay harness connected to the 12V power supply is short-circuited
- Relay harness connected to the ground is short-circuited
- **ECM**does not provide grounding access

In order to determine whether the main relay works normally, the following checks may be carried out:

- Sound check - place the ignition key to ON position to check whether the fuel pump will work for 2s.
- Whether the fuel injector or ignition coil is supported by power (apply multimeter to check the voltage of battery)

If the above are verified, it indicates that the main relay works normally.

CANCommunication

The engine management system applies high **CAN** speed communication network for the communications between **ECM** and **ABS**, **BCM** and **TCM** and diagnoses outputs through diagnostic interface.

Immobilizer Power Supply

When the ignition switch is turned to ON position, the engine control module (**ECM**) and body control module (**BCM**) communicate through **CAN** high-speed bus for mutual information verification, after verification, **BCM** will control the operation of starter motor, **ECM** will control ignition and fuel injection when the key is turned for requesting start, and the engine will be started. If a pin wired into immobilizer power supply of **ECM** is disconnected from the harness and 5V power supply is failed to obtain, the engine immobilizer will be failed, **BCM** cannot get verification information from **ECM**, the starter motor cannot work, neither does the engine.

Engine Air Supply Control System

The main air supply control system mainly includes:

- Electronic throttle body
- Accelerator Pedal Module
- Boost Pressure Sensor
- Camshaft position sensor
- Variable Camshaft Timing Valve
- Hot film meter (HFM)
- Boost Pressure Control Solenoid Valve
- Intake Air Pressure Sensor
- Intake Bleeder Valve

Fuel direct injection system requires development of a complex engine management system to fully meet the high fuel economy and high output power. In terms of mixture formation, the two basic running modes differ:

- Low-load range

  In this range, the engine runs under the condition of highly stratified mixture and very thin mixture for the minimum possible fuel consumption. Injection is postponed until the ignition timing, and the purpose is to obtain the ideal condition of formation of two layers in the combustion chamber: The first layer of combustible mixture is concentrated at the spark plug, and the outer second layer is an isolation layer formed by air and residual exhaust gas. So the engine can run under a larger non-solar terms condition and avoid air change loss. In addition, since the heat loss of the combustion chamber wall is avoided, the thermodynamic efficiency is improved.

- High-load range

  When the engine load and fuel injection quantity increase, the stratified mixture is becoming more and more thick, this will lead to the deterioration of emissions, especially black smoke. So the mixture in the cylinder must be uniform when the engine runs under a higher load. Fuel is injected into the cylinder during intake stroke to ensure that the fuel and air are uniformly mixed.

To precisely control the air inflow, the boost pressure sensor, intake air pressure sensor and air flow meter are configured in the engine management system, and **ECM** obtains the air inflow information through these sensors. After the air inflow information is obtained, on the one hand, **ECM** can control the turbocharging system through the intake air discharge valve and boost control valve; on the other hand, **ECM** can control the air intake and exhaust valves based on the signal from intake and exhaust camshaft position sensor for optimal control on the air inflow.

Electronic Throttle

The electronic throttle is composed of throttle actuator, throttle driver (DC motor) and throttle position sensor, etc.

ECMGive instructions to make the DC motor act and affect the throttle opening through the drive mechanism; at the same time, the throttle can give **ECM** a feedback signal indicating the current position of the throttle to realize throttle feedback regulation.

www.cargeek.ir

Accelerator Pedal Module

There are two potentiometers in the accelerator pedal module acting as sensors, their resistance value will vary with the position changes of the electronic accelerator pedal, while **ECM** can response precisely to the movement of the accelerator pedal, therefore, the movements of the accelerator pedal may be monitored.

Because both potentiometers are fitted in the same phase, when the accelerator pedal position changes, their resistances will increase or decrease linearly. When a +5V voltage is added, the pedal position will be transformed into the voltage output corresponding to the changes of the resistance value. These two potentiometers and two potentiometers fitted on the electronic throttle used for monitoring the position of the throttle form a part of whole electronic throttle control system monitoring function, which can provide the redundancy protection expected by system control.

Intake Temperature and Pressure Sensor (TMAP)

The intake temperature and pressure sensor is fitted on the pipeline between intercooler and throttle. The intake air pressure portion is measured by a piezoelectric type sensor which can perform direct pressure measurement through sensing elements. It may provide the "Load Signal" to the controller in accordance with the measured boosted intake manifold pressure; the controller provides a 5V voltage and feeds back a 0 ~ -5V voltage to the controller depending on boost pressure.

Camshaft position (CMP) sensor

The camshaft position sensor is applied to cooperate with the rotational speed sensor in the circumstances without the electricity distributor, to provide **ECM** with the camshaft phase information, namely, identify the compression top dead center and exhaust top dead center of the cylinder 1.

The camshaft position sensor is composed of a hall sensor and a rotor made of steel plate. The hall sensor is fixed, and the rotor with a 36°-arc boss is fitted on the camshaft. The inner magnetic field of the hall sensor will change when the boss passes it, which leads to the change of output signal voltage. In this way, the two top dead centers are identified.

Failure

CMPsensor or magnetic ring may have failures or provide incorrect signals due to the following conditions:

- **CMP**sensor gap fails to comply with the specifications.
- **CMP**sensor is contaminated by metallic debris.
- **CMP**sensor hall-effect semiconductor is damaged.
- **CMP**sensor magnetic field is too weak.
- **CMP**sensor harness is open-circuit.
- **CMP**sensor harness is short-circuited.
- **CMP**sensor harness has a high resistance.
- Magnetic ring is contaminated by metallic debris.
- The precision of magnetic ring is low due to mechanical damage.
- Exhaust camshaft timing is incorrect.
- Intake camshaft timing is incorrect.

Variable Camshaft Timing Valve

The engine control module outputs pulse width modulation (**PWM**) signal to drive the solenoid. Change in duty ratio may adjust the opening of the solenoid.

The system can, under the condition of low speed, reduce the fuel consumption and improve the performance of engine in the process of exhaust emission, especially torque performance.

ECMreceives signals from **CKP** sensor and **CMP** sensor. With these signals, **ECM** determines the valve timing by consulting control chart. Then **ECM** operates the oil control valve installed on the side of cylinder head. These solenoid valves control the oil to flow into phase modulator and change the relative position to the camshaft of the phase modulator so as to adjust the valve timing.

Hot film meter (HFM)

HFMworks according to the hot film principle. **HFM**has two sensing elements in one film. One element stays in ambient temperature, such as 25°C (77°F) while the other is heated to 200°C (392°F), exceeding 225°C (437°F). The air passing by **HFM** will generate a cooling effect. The air flow which maintains the temperature difference of 200°C (392°F) may provide precise, but non-linear signal.

HFMis combined with the **NTC** thermistor in the voltage divider circuit. The internal resistance value of the thermistor decreases with the increase of the intake temperature. **NTC**thermistor is electrified to form a voltage division circuit, the changes in the reference voltage controlling this voltage division circuit is converted into more stable frequency signals in **HFM** and output to **ECM**, and **ECM** calculates the air flow through the frequency signals, and then corrects the fuel injection quantity.

If **HFM** has fault, **ECM** will implement back-up strategy. If the **HFM** signal fails, the following symptoms may occur:

- Hard starting
- Stop after the startup of engine
- Emission control does not work
- Idle speed control does not work
- Performance of engine reduces

www.cargeek.ir

If **NTC** thermistor fails, the air temperature set is defaulted to be -5°C (23°F) by **ECM**. If the signal of the **NTC** thermistor fails, one of the following symptoms can be observed:

- Black smoke is caused by excessive oil supply
- Idle speed control does not work

Boost Pressure Control Solenoid Valve

The boost control solenoid valve receives the duty ratio information sent by **ECM** to adjust the boost pressure of the turbocharger. The greater the duty ratio, the higher the boost pressure.

When the engine meets medium or small loads, the boost solenoid valve controls the diaphragm-type bypass valve to lead the exhaust gas in the exhaust pipe into the bypass pipeline, and the boost pressure is extremely small at the moment; when the engine accelerates or meets large loads, the boost solenoid valve controls the diaphragm-type bypass valve to reduce the bypass opening in the exhaust pipe, exhaust gas flows into the turbocharger and the boost pressure rises at the moment.

Boost Pressure Sensor (MAP)

The boost pressure sensor is installed in the front of the intake manifold. The intake air pressure portion is measured by a piezoelectric type sensor which can perform direct pressure measurement through sensing elements. It may provide the "load signal" to the controller according to the measured manifold pressure; the controller provides a 5V voltage and feeds back a 0 ~ -5V voltage to the controller depending on boost pressure.

Turbocharger bleeder valve

The intake bleeder valve is mainly used to recirculate the pressurized air in the compressor in the turbocharging system to the air intake pipe, so that the boost pressure rapidly decreases during engine surge and shifting.

ECMsends ON/OFF command to allow the solenoid in the intake bleeder valve to operate, when the solenoid is open, compressed air can be circulated to the air intake pipe side, as shown in the following figure:

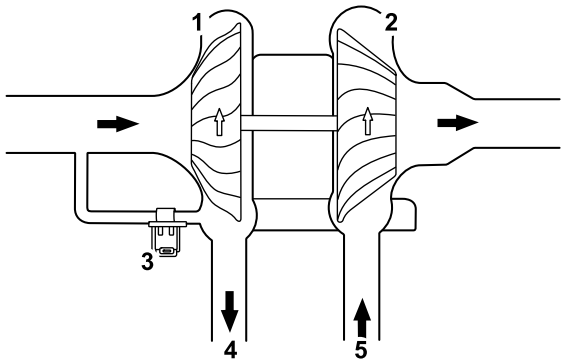

S1314001

1. Compressor
2. Turbine
3. Intake Bleeder Valve
4. to intake
5. to outtake

Engine ignition control system

The engine ignition control system mainly includes:

- Ignition coil 1 ~ 4
- Crankshaft Position (**CKP**) Sensor
- Knock Sensor

Ignition Coil

The ignition coil turns the DC low voltage of battery to high voltage and ignites the air mixture in cylinder through the spark generated by the discharge of spark plug. Each ignition coil consists of a pair of coil windings around laminated iron core.

There are four ignition coils fitted on the camshaft cover. They are fitted to each cylinder, and connected with the harness through a connector. Each coil has a spark plug at the lower part.

Failure

The ignition coil may have failures under the following conditions:

- Primary winding open-circuit
- Primary winding short-circuited
- The resistance of primary winding out of tolerance
- Secondary winding open-circuit
- Secondary winding short-circuited
- The circuit connecting secondary winding with primary winding is short
- The resistance of secondary winding out of tolerance
- Coil top insulation mechanically damaged

Crankshaft Position (CKP) Sensor

CKPThe sensor provides the engine speed information and crankshaft top dead center information. It is a hall-effect sensor matched with oscillator in application. The oscillator is a teeth plate, with 58 small teeth separated by 6°and a 2-teeth gap on magnetic ring. The pulse wheel is fitted on the crankshaft, and rotates with the crankshaft. When the tooth tips pass by sensor ends, the oscillator made of steel magnetic materials cuts the magnetic force line of the permanent magnets in the sensor to produce the induced voltage in the coil, which acts as the rotational speed output signal.

Failure

CKPsensor or magnetic ring may have failures or provide incorrect signals due to the following conditions:

www.cargeek.ir

www.cargeek.ir

- **CKP**sensor gap fails to comply with the specifications.
- **CKP**sensor is contaminated by dust
- **CKP**sensor hall-effect semiconductor is damaged.
- **CKP**sensor magnetic field is too weak.
- **CKP**sensor harness is open-circuit.
- **CKP**sensor harness is short-circuited.
- **CKP**sensor harness has a high resistance.
- Magnetic ring is contaminated by dust
- The precision of magnetic ring is low due to erosion or mechanical damage
- **CKP** sensor signal is distorted due to out-of-round flywheel or driving disk.
- **CKP** sensor signal is changed due to crankshaft radial movement.

In order to check the **ECM** for receiving the signal from **CKP** sensor, following operations may be conducted:

- Check the operation of the fuel pump in the engine starting process; if the fuel pump supplies fuel when the ignition is on but not operating, it indicates that **ECM** does not receive **CKP** sensor signal.

Knock Sensor

The knock sensor is used to provide electronic controller **ECM** with engine knock information to carry out knock control.

The knock sensor is a vibration acceleration sensor. It is fit on the engine block. The sensitive component of the sensor is a piezoelectric crystal. The vibration of the engine block is transferred to the piezoelectric crystal through the mass block in the sensor. Due to the pressure generated from the vibration of mass block, the piezoelectric crystal produces voltage on both pole surfaces to transform the vibration signal into voltage signal to output.

Failure

The knock sensor may have failures or provide incorrect signals due to the following conditions:

- Sensor open-circuit
- Sensor to ground short-circuited
- Sensor circuit intermittently open
- Incorrect knock sensor refit

In case of knock sensor signal failure, the following symptoms may occur:

- Store the failure code
- **ECM**Fail to inspect engine combustion knock
- **ECM**Restore default settings

Engine Fuel Supply Control System

The engine fuel supply control system mainly includes:

- Upstream oxygen sensor
- Downstream oxygen sensor
- Fuel injectors 1 ~ 4
- Canister valve
- Low-pressure Fuel Pump Relay
- Fuel Control Valve
- Fuel Rail Pressure Sensor

The engine fuel supply control system is mainly applied to control the fuel supply for engine under different working conditions.

MED-Motronic injection system stores fuel in the fuel rail at certain pressure, and fuel is injected into the combustion chamber through the electromagnetically controlled injector. so it provides the following functions:

- Free selection of injection starting point
- Alterable system pressure

Heated Oxygen Sensor

The oxygen sensor is a heated oxygen sensor which measures the oxygen content in engine exhaust to determine if the gasoline and air are burnt completely. The electronic controller implements the closed-loop control aiming at excessive air coefficient l = 1 according to the information to ensure that three-way catalytic converters have high conversion efficiency in such three kinds of pollutant as **HC**, **CO** and **NOx** in the exhaust.

Its sensing element is a ceramic tube, the inner surface and outer surface of which are contacted with exhaust gas and ambient air respectively. When the sensing ceramic tube temperature reaches 350°C, it will have the property of solid electrolyte. With this property, the concentration difference of oxygen is turned to electric potential difference so as to form electric signal output. If the mixture is rich, the concentration difference of oxygen inside and outside the ceramic tube is high, the electric potential difference is high, a large amount of oxygen ions move from inside to outside and the output voltage is high (approximate to 900mV); if the mixture is thin, the concentration difference of oxygen inside and outside the ceramic tube is low, the electric potential difference is low, only a few of oxygen ions move from inside to outside and the output voltage is low (approximate to 100mV).

Failure

HO2Smay have failures or provide incorrect signals due to the following conditions:

- Contaminated by leaded fuel

www.cargeek.ir

www.cargeek.ir

- Contaminated by carbon or silicon deposits
- Impact damage/mechanical impact
- External harness open circuit
- External harness connected to the 12V power supply is short-circuited
- External harness short to the ground
- External harness high resistance
- Heating device open-circuit
- Heating device short-circuited
- **ECM**Ground access is not provided to heating device.
- Harness shielding not connected to ground

Canister control valve

The canister control valve is applied to control the regeneration air flow of fuel evaporation control system. The canister in the fuel evaporation control system absorbs fuel vapor from fuel tank till it cannot absorb any more. **ECM**controls the canister control valve to open and allows fresh air and saturated fuel steam in the canister to form regeneration air flow, then send it to engine air inlet pipe.

The electronic controller, based on the different working conditions of engine, changes the air-fuel ratio of the pulse signal transmitted to canister control valve electromagnetic coil to control the regeneration air flow. Moreover, the flow is also influenced by the pressure difference on both ends.

Failure

The canister purge control valve may have failures occurred under the following conditions:

- Electromagnetic winding open-circuit
- Electromagnetic winding short-circuited
- External harness connected to the 12V power supply is short-circuited
- External harness short to the ground
- External harness high resistance
- **ECM**Do not provide **PWM** signal.
- Mechanical problems occur in the valve

Low-pressure Fuel Pump Relay

The electric fuel pump transfers the fuel from fuel tank to engine and provides sufficient fuel pressure and rich fuel.

It is a DC motor driven vane pump, which is fitted in the fuel tank and immersed in fuel. It applies fuel for heat dissipation and heat dissipation. The battery supplies power to the electric low-pressure fuel pump via low-pressure fuel pump relay which allows the electric low-pressure fuel pump circuit to be closed only when the relay is electrified, starts and the engine operates. When the engine stops running due to accident, the fuel pump will stop operating automatically.

Failure

If the low-pressure fuel pump relay is failed, the following symptoms will be found:

At the time of start

- If the low-pressure fuel system pressure falls to zero, the engine will fail to ignite.
- If the pressure of the low-pressure fuel system is lower than the normal operating pressure (0.38MPa), the engine may try to ignite, but fails to work normally.
- If the pressure of the low-pressure fuel system is normal, the engine will ignite to operate, but will flame out finally with decrease in fuel pressure, and fails to restart.

During driving

If the fuel pump relay fails while driving, the engine will loss power and be finally off due to shortage of fuel.

The low-pressure relay may fails under the following conditions:

- Relay coil short-circuit
- Relay coil break-circuit
- Relay coil high resistance
- Relay contact normally open
- Relay contact normally closed
- Relay contact high resistance
- Relay harness open-circuit
- Relay harness high resistance
- Relay harness connected to the 12V power supply is short-circuited
- Relay harness connected to the ground is short-circuited
- **ECM**Ground access cannot be provided.

Carry out the following checks and check the low-pressure fuel pump relay for normal operation:

- Sound check - place the ignition key to ignition position to check whether the fuel pump will work for 2s.
- If there is no "beep" sound, check the inertia switch and ensure no accidental trigger. If the fuel pump does not work, but the inertia switch is in "ON" position, remove the low-pressure fuel pump relay and check.

Check the **ECM** for providing an access to ground for the low-pressure fuel pump relay when the ignition switch is placed in "ON" position (for 2s) and during the starting. Remove fuel pump relay, connect multimeter between the 12V power supplied by vehicle and the fuse box pin connected with fuel pump pin 85, check the output according to circuit diagram after the ignition is on.

www.cargeek.ir

www.cargeek.ir

As the **ECM** internal drive circuit consumes voltage, the measured voltage may be lower than battery voltage.

Direct injection fuel injection system

The direct injection fuel injection system consists of high-pressure fuel pump, fuel pipe-fuel pump to fuel rail, fuel rail assembly (containing fuel rail, fuel rail pressure sensor, injector) and low-pressure fuel pipe-high-pressure fuel pump front. The system operating pressure is 20MPa.

High Pressure Fuel Pump

The high pressure fuel pump has the function of pressurizing low pressure fuel, and inputting high pressure fuel into the fuel pump through the high pressure fuel pipe. Ensure the minimum pressure fluctuation in the fuel rail, not likely to be mixed with oil.

The working process includes: The fuel pump plunger descends, the fuel pump is in the suction stroke, and low pressure fuel enters into the fuel pump plunger cavity; the plunger starts ascending after reaching the bottom dead center, and fuel is pressurized and conveyed to the high pressure fuel rail.

Fuel Control Valve

ECMrealizes the control of high pressure fuel flow by controlling the opening or closing of the fuel control valve.

In the first half section of plunger ascending in the high pressure fuel pump, if the solenoid valve is not energized, the fuel control valve is open, the fuel is unable to produce pressure, so part of fuel flows back to the low pressure oil circuit via the control valve.

After the solenoid valve is energized, the fuel control valve starts being closed, and completely closed after a period, and then the plunger cavity is completely closed; the plunger continues to ascend, when the pressure in the plunger continues to rise and exceeds the rail pressure, and the high pressure fuel is pumped into the fuel rail.

Fuel Rail Pressure Sensor

The fuel rail pressure sensor is used to measure pressure in the fuel rail. The sensor measures pressure based on the piezoelectric crystal resistance value, and sends a voltage signal to **ECM**.

Fuel Injector

The fuel injector, according to the commands of **ECM**, injects fuel within the specified time to supply the engine with fuel and have it atomized. **ECM**energizes the injector coil to form magnetic force. When the magnetic force is strong enough to overcome the resultant force of the return spring pressure, needle valve gravity and friction, the needle valve begins to rise, and the fuel injection process starts. When fuel injection pulse ends, the pressure of return spring makes the needle valve close again.

Failure

The injector may fails under the following conditions:

- Nozzle is contaminated by dust or wax (flow is reduced)
- Nozzle offset (nozzle is positioned incorrectly)
- Fuel filter blockage
- Winding open-circuit
- Winding short to the ground
- Winding connected to the 12V power supply is short-circuited
- Winding resistance out of tolerance
- External harness open circuit
- External harness short to the ground
- External harness connected to the 12V power supply is short-circuited

Auxiliary 1 (Heat Management)

The heat management portion mainly includes:

- A/C compressor relay
- A/C Pressure Sensor
- Engine coolant temperature sensor
- Cooling fan:
- Electronic thermostat control

The engine adjusts the opening or closing of the cooling fan relay according to the coolant temperature.

After the driver presses the A/C request (ON/OFF) on the instrument panel, the engine control unit decides whether to open the air conditioning according to the current engine coolant temperature sensor signals and engine speed signals.

Engine coolant temperature sensor

The coolant temperature sensor is used to provide the engine with coolant temperature information. Whereby, the controller can correct the fuel injection and ignition. It is a negative temperature coefficient (**NTC**) thermistor, its resistance value is reduced as the temperature rises, but it is not a linear relationship. The thermistor is mounted inside a copper heat sleeve.

Failure

ECTsensor may have failures or provide incorrect signals due to the following conditions:

- The system is lack of coolant due to leakage
- External harness open circuit
- External harness short to the ground

www.cargeek.ir

- External harness connected to the 5V power supply is short-circuited
- External harness high resistance
- **ECM**Ground access cannot be provided.
- **ECT**Thermistor damaged

Cooling fan:

ECM controls three positions of the cooling fan through the control of two pins on three relays. ECM controls the speed of cooling fan based on the air conditioning system request, engine coolant temperature, air conditioning system pressure, ambient temperature and vehicle speed. If the engine temperature is still high after the engine stops running, ECM will keep the cooling fan running for a while.

Electronic thermostat

The electronic thermostat is used to adjust the engine coolant temperature to ensure that the engine coolant is heated rapidly and prevent engine overheating. When the engine operates at low and medium loads, the engine coolant temperature is increased to reduce oil viscosity, effectively reduce mechanical friction loss of piston, etc., reduce heat transfer loss, and optimize combustion; when the engine operates at high speed and high load, the engine temperature may be reduced to rapidly cool the engine.

ECMgives the **PWM** command, so that the electronic thermostat acts to heat paraffin in the core, the paraffin package is expanded, and paraffin pressurize the push rod; since the upper part of the push rod is fixed with the housing, the push rod drives the whole core to move downward in the reverse direction; the core copper cap and main valve are in interference fit to drive the main valve to open. The Electronic thermostat opening is proportional to the duty ratio of **PWM** signal.

When the engine coolant temperature rises to above 97°C, the thermostat starts to be gradually opened, engine coolant enters into general circulation (radiator) cooling, then flows back to the water pump inlet, reaches 112°C, and the thermostat is fully open. The coolant is below 97°C, the thermostat is in the closed state, and the coolant directly feeds into the water pump inlet.

Auxiliary 2 (external auxiliary)

The external auxiliary portion mainly includes:

- Alternator control input
- Brake pedal switch
- Brake lamp

Alternator load input

Alternator load input is the signal fed back to ECM by the alternator according to the vehicle electricity situation. Engine load change will seriously affect the engine idle speed. In order to compensate the load to maintain a stable idle speed, ECM needs to obtain the torque load information of AC motor.

Brake pedal switch

The brake switch is located on the pedal box in the cab. **ECM**monitors the switch status and transfers the data to **TCM** by **CAN** bus, and the **TCM** controls the gearbox clutch to open. When the brake pedal is operated, the brake switch is activated.

Cruise control system

The cruise control system can maintain the vehicle at a constant and comfortable speed with the accelerator pedal not depressed. Cruise control system involves:

- Brake switch
- Cruise control switch
- Cruise indicator lamp
- Automatic transmission**TCM**
- **ECM**
- Electronic throttle

Cruise control switch

The cruise control switch is of a handle type, used for engaging and disengaging the cruise control system and adjusting the set speed.

The cruise operating switch is connected to GW which transmits network signals to **ECM**, different **CAN** signals may be provided for **ECM** by operation of different switches to determine the cruise switch input state at this time.

Cruise status indicator lamp

The indicator lamp indicates the status of cruise control system. The lamp is located on the instrument pack. When the cruise control system is on standby, the cruise indicator illuminates green; when the cruise control system is activated, the cruise indicator illuminates yellow. When a fault relating to the cruise system is detected, there will be tooltip for the cruise system failure when the driver operates the main cruise switch, and the indicator lamp will flash at this time.

On standby

When the main switch is pressed, the cruise control system is on standby.

Activation

Once it is on standby, when the vehicle is in the following status:

- Non-brake state
- Running with the speed in the range of 40 - 200km/h
- Engine speed no more than 6000rpm
- Transmission not in parking, neutral or reverse gear (automatic transmission)

www.cargeek.ir

- Transmission gear in 3rd gear (manual transmission)
- Traction control not in activated status

Activate cruise control system by pressing the steering wheel SET+/SET-. When the cruise system is activated, cruise control sets the cruise control target speed by pressing SET+/SET-. After receiving the input message from the SET+/SET- switch, **ECM** stores the current speed as set speed, and operates the electronic throttle to maintain the vehicle at the set speed.

Acceleration/Deceleration

When cruise control is activated, the cruise target speed is adjusted by operating SET+/SET- on the steering wheel.

Briefly pressing the SET+/SET- switch (less than 0.5 second) may increase/decrease the set speed by 1km/h to a new set speed. Pressing and holding the SET+/SET- switch can keep the vehicle accelerating/decelerating, until the switch is released. On this point, the accelerated/decelerated speed will be used as new set speed.

The vehicle still could be accelerated by normally stepping down the accelerator pedal (such as overtaking) when the cruise control system is working. When the accelerator pedal is released, the speed will resume to the cruise target speed. Or press the SET+ switch before the accelerator pedal is released, then the current speed is used as the new cruise target speed.

Recovery/Pause

After the cruise system is enabled, pressing the RES switch will make the system recover the operation of the cruise control, and accelerate or decelerate to the stored set speed.

When one (such as brake applied) of the conditions required to enable the cruise system to operate does not exist any more, the cruise control pauses. If the vehicle speed drops below 70% of the set speed, such as driving uphill, the cruise control will also pause.

If the vehicle speed continuously exceeds the cruise set speed by 16km/h (for more than 30s), such as depressing the accelerator pedal or driving downhill, the cruise control will pause.

Cancellation

The cruise control can be canceled by pressing the master control switch or turning the ignition switch to position 0. When the cruise control is canceled, the set speed is eliminated from the cruise control, and the indicator in the instrument pack goes out.

www.cargeek.ir

www.cargeek.ir

Operation

www.cargeek.ir

www.cargeek.ir

www.cargeek.ir

Service Procedures

Fuel Pump

Remove

Caution: *Before removing the high-pressure system, allow the vehicle to cool.*

1. Disconnect the battery negative.
2. Remove the engine cover.
3. Place cloths with strong absorptivity around the fuel rail high-pressure fuel pipe to collect the spilled fuel.

Warning: Fuel vapour is highly flammable and in confined spaces is also explosive and toxic. Always have a fire extinguisher containing foam, CO2, gas or powder close

Warning: The spilling of fuel is unavoidable during this operation. Ensure that all necessary precautions are taken to prevent fire and explosion.

4. Slowly loosen the high-pressure fuel pipe nut at the high-pressure fuel rail end until the fuel flows out, and remove the nut when no fuel flows out.
5. Remove the cloth from the high-pressure fuel rail, and put it into a permissible container.

Caution: *Do not drip fuel onto the paint.*

6. Remove the high-pressure fuel pipe nut of the high-pressure fuel pump to remove and discard the high-pressure fuel pipe.

Caution: Always fit plugs to open connections to prevent contamination.

7. Disconnect the connector of high-pressure fuel pump.
8. Remove the clip fixing the harness to the high pressure fuel-pump bracket, and remove the harness.
9. Disconnect the low-pressure fuel pipe from the high-pressure fuel pump.
10. Remove 3 bolts fixing the high-pressure fuel pump protecting bracket to the engine cylinder block, and remove the high-pressure fuel pump protecting bracket.

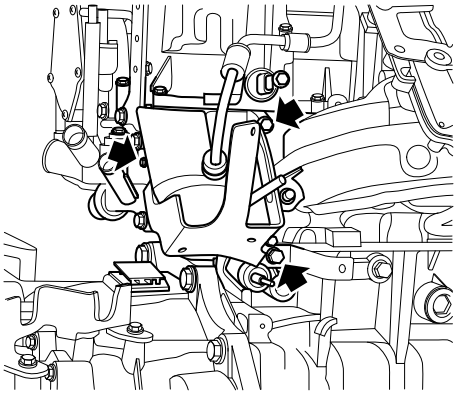

S1133535

11. Remove the fuel pump sponge noise enclosure.
12. Remove 2 bolts fixing the fuel pump to the engine, and remove the high-pressure fuel pump and roller tappet.

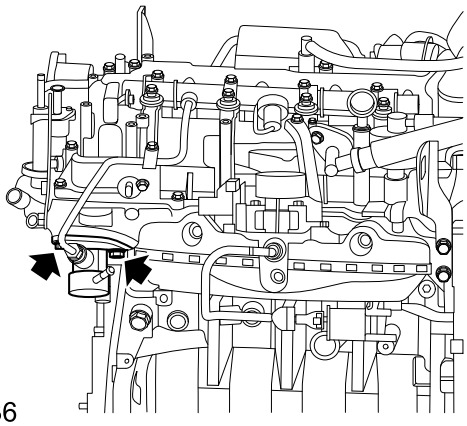

S1133536

Refit

1. Ensure that the high-pressure fuel pump drive cam is at the bottom dead center.
2. Apply engine oil to the cam, fuel pump seat hole and tappet evenly.
3. Fix the fuel pump and roller tappet to the engine, fit 2 bolts, tighten to **21–29Nm**, and check the torque.

Caution: *When tightening the fuel pump bolts, if there is any equipment, both bolts are to be tightened to the specified torque; if there is no equipment, the bolts are to be repeatedly tightened in turn, and it is not allowed to tighten 1 bolt after another.*

4. Fit the fuel pump sponge noise enclosure.
5. Fix the high-pressure fuel pump protecting bracket to the engine cylinder block, fit 3 bolts, tighten to **19–25Nm**, and check the torque.
6. Connect the low pressure oil pipe.
7. Locate the harness to the high-pressure fuel pump bracket, fix it with clips, and connect the connector of high-pressure fuel pump.
8. Fix a new high-pressure fuel pipe to the fuel pump and fuel rail, fit 2 nuts, and tighten to **28–32Nm**.
9. Fit the engine cover.
10. Connect the battery negative.

www.cargeek.ir

Fuel Rail

Remove

Caution: *Before removing the high-pressure system, allow the vehicle to cool.*

1. Disconnect the battery negative.
2. Remove the engine hood.
3. Place cloths with strong absorptivity around the fuel rail high-pressure fuel pipe to collect the spilled fuel.

Warning: Fuel vapour is highly flammable and in confined spaces is also explosive and toxic. Always have a fire extinguisher containing foam, CO2, gas or powder close

Warning: The spilling of fuel is unavoidable during this operation. Ensure that all necessary precautions are taken to prevent fire and explosion.

4. Slowly loosen the high-pressure fuel pipe nut at the high-pressure fuel rail end until the fuel flows out, and remove the nut when no fuel flows out.
5. Remove the cloth from the high-pressure fuel rail, and put it into a permissible container.

Caution: *Do not drip fuel onto the paint.*

6. Remove the connecting nut between the high-pressure fuel pump and high-pressure fuel pipe, remove the high-pressure fuel pipe, and discard the high-pressure fuel pipe.

Caution: Always fit plugs to open connections to prevent contamination.

7. Disconnect the fuel rail harness from the engine harness.
8. Disconnect the connector of the fuel rail pressure sensor.
9. Remove the fixing clip fixing the engine harness to the fuel rail.
10. Remove the ignition coil.

☞ **Ignition Coil Remove**

11. Disconnect the connector on the fuel injector.
12. Remove 8 bolts fixing the fuel rail to the fuel injector.

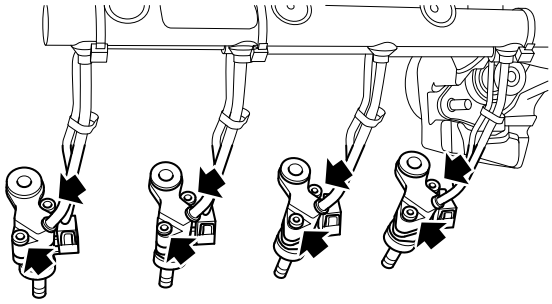

S1133537

13. Remove 8 bolts fixing the fuel rail to the cylinder head, and remove the fuel rail.

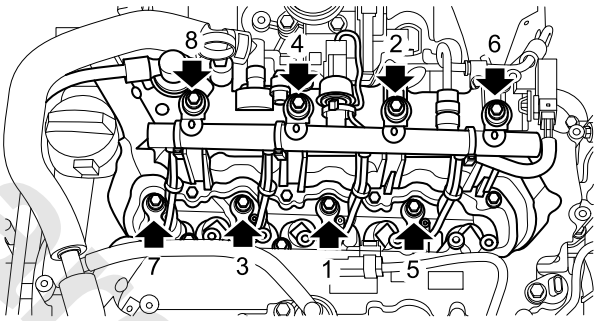

S1133538

Refit

1. Seat the fuel rail assembly to align 8 bolts of the fuel injector and fuel rail with their mounting holes. Press down to combine the injector interface on the fuel rail with 4 injectors in place until the mounting surfaces of bolts 8\4\2\6 fit the cylinder head.
2. Fit 8 bolts fixing the fuel rail to the fuel injectors, tighten them to **4–6Nm**, and check the torque.
3. Tighten 8 bolts manually in the sequence of 8-4-2-6/7-3-1-5. Tighten 8 bolts circularly in the sequence of 1-8. Tighten the bolt to half of the final torque, then further tighten to the final torque (**9–11Nm**) and check the torque.
4. Connect the connector on the fuel injector.
5. Fit the ignition coil.

☞ **Ignition Coil Refit**

6. Connect the fuel rail harness and engine harness.
7. Fix a new high-pressure fuel pipe to the fuel rail and high-pressure fuel pump, fit 2 nuts, tighten to **28–32Nm**, and check the torque.
8. Connect the connector of the fuel rail pressure sensor.
9. Connect the battery negative.

www.cargeek.ir

www.cargeek.ir

Fuel Injector

Remove

1. Remove the fuel rail assembly.

Fuel Rail Assembly Remove

2. Remove 4 fuel injectors with the **TEN00121** and **TEN00140**, and discard 16 fuel injector seal rings.

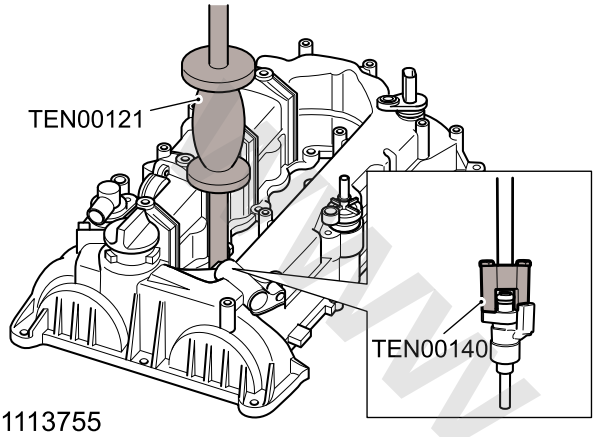

S1113755

Refit

1. Clean the groove of the fuel injector and fuel rail.
2. Fit the fuel injector seal rings to the steering tool of the **TEN00064**, then fit the fuel injector seal rings to the fuel injector with the **TEN00064**, and fit the fuel injector seal rings in sequence.

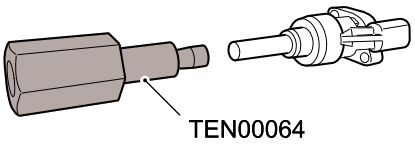

S1113759

3. Fix the fuel injector into the fuel injector seat hole in the cylinder head, and fit it in place.
4. Fit the fuel rail assembly.

Fuel Rail Assembly Refit

Spark Plug

Remove

1. Remove the ignition coil.

Ignition Coil Remove

2. Clean the area around the spark plug. Remove the dust around the spark plug with high pressure gas.
3. Remove 4 spark plugs with the spark plug socket.

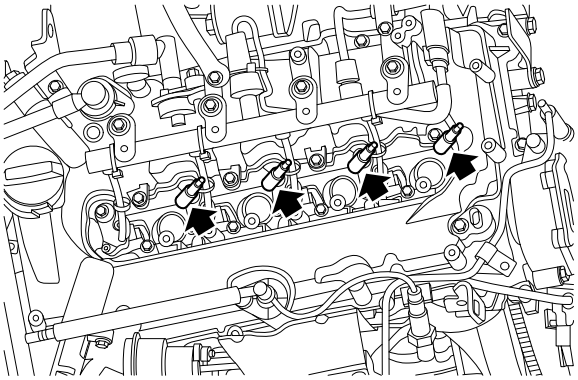

S1133540

Refit

1. Identify the model of the original spark plug before fitting a new one. Spark plug of the same model shall be selected for replacement.
2. Fit the spark plug, tighten to **20Nm**, and check the torque.
3. Fit the ignition coil.

Ignition Coil Refit

www.cargeek.ir

www.cargeek.ir

Engine Control Module (ECM)

Remove

1. Disconnect the battery negative.
2. Remove 4 bolts securing **ECM** bracket to firewall.

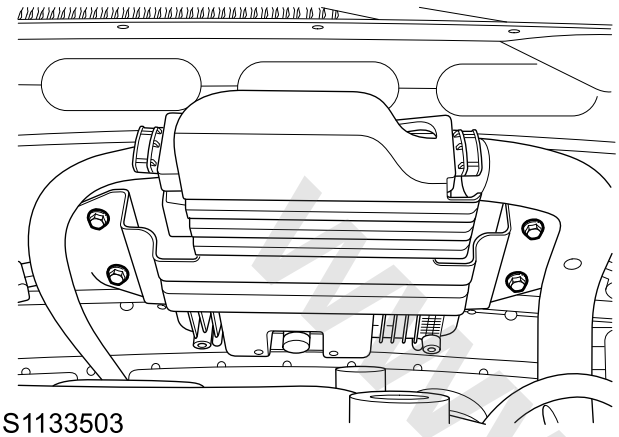

S1133503

3. Disconnect the connector from the **ECM**.

Caution: *When disconnecting the* **ECM** *connector, avoid shaking the connector all round; avoid applying the force on one side; avoid damaging the connector structure.*

4. Remove 4 nuts securing **ECM** to the body firewall.

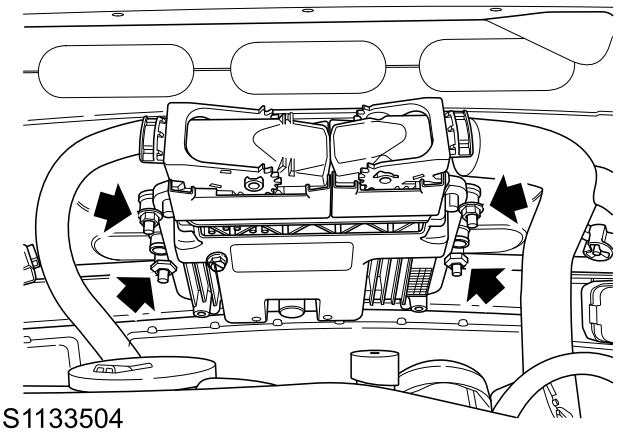

S1133504

Refit

1. Secure **ECM** to the firewall, fit 4 nuts, tighten to **7–10Nm** and check the torque.
2. Secure the wire harness and connect it to **ECM** connector.

Caution: *When connecting the* **ECM** *connector, make sure to align the connector, and insert it with even force applied on both ends. Attempt of tilting assembly or assembly with great effort on one side shall be not allowed. If the connector is damaged, replace the engine harness*

3. Secure **ECM** bracket to the firewall, fit 4 bolts, tighten to **8–10Nm** and check the torque.
4. Connect the battery negative.
5. Programme and encode **ECM**.

☞**Self-learning and Adjustment, Programming and Encoding - ECM Replacement**

6. Perform the electronic throttle self-learning.

☞**Electronic Throttle Self-learning**

7. Place the ignition switch in ON, and use **VDS** to perform "**ECM** Adaption Reset".
8. Wait for 2-5 seconds, and turn off the ignition switch, then re-start the vehicle.

www.cargeek.ir

Ignition Coil

Remove

1. Disconnect the battery negative.
2. Disconnect 4 ignition coil connectors.
3. Remove 4 bolts fixing the ignition coil to the cylinder head.

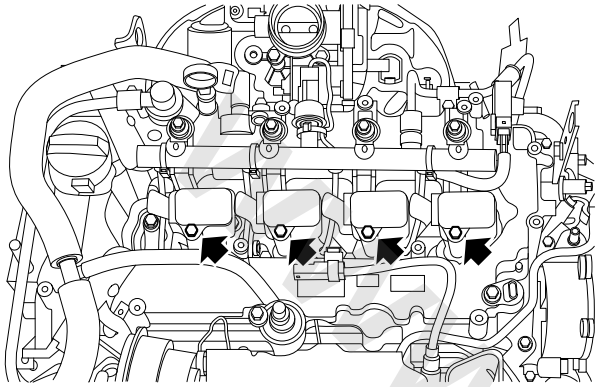

S1133544

4. Hold the rubber bush end of the ignition coil, and pull out the ignition coil from the spark plug (if it is hard to pull it out, rotate the ignition coil right and left).

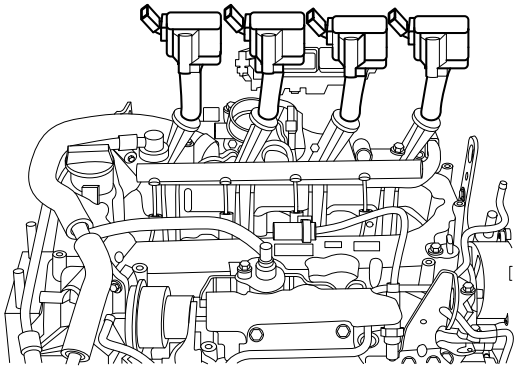

S1133545

Refit

1. Fit 4 ignition coils to the spark plug, fit 4 fixing bolts, tighten to **8–12Nm**, and check the torque.
2. Connect the ignition coil connector.
3. Fit the engine cover.
4. Connect the battery negative cable.

Crankshaft Position Sensor

Remove

1. Disconnect the battery negative.
2. Raise the vehicle on the lift.
3. Disconnect the electrical connector from the crankshaft position sensor.
4. Remove 1 bolt fixing the crankshaft position sensor to the cylinder block.

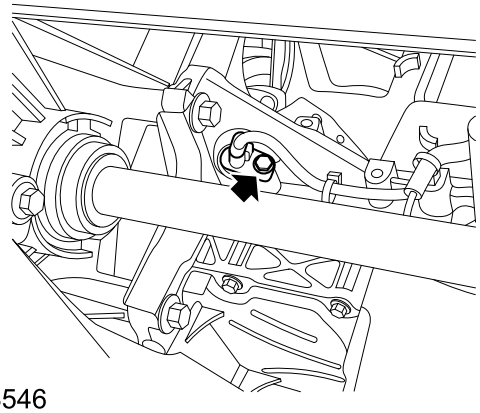

S1133546

5. Remove the crankshaft position sensor.

Refit

1. Clean the mating surface of the crankshaft position sensor and cylinder block.
2. Secure the crankshaft position sensor to the cylinder block, fit 1 bolt and tighten to **8–12Nm**.
3. Connect the crankshaft position sensor connector.
4. Lower the vehicle.
5. Connect the battery negative.
6. Place the ignition switch in ON, and use **VDS** to perform "**ECM** Adaption Reset".
7. Wait for 2-5 seconds, and turn off the ignition switch, then re-start the vehicle.

www.cargeek.ir

www.cargeek.ir

Engine Coolant Temperature Sensor

Remove

1. Disconnect the battery negative.
2. Remove the coolant expansion tank cap to release the pressure of the cooling system, and fit the cap.

Warning: Since injury such as scalding could be caused by escaping steam or coolant, do not remove the filler cap from the coolant expansion tank while the system is hot.

3. Disconnect the vacuum hose from the vacuum pump, and remove the vacuum hose.
4. Loosen the clip of the coolant temperature sensor.

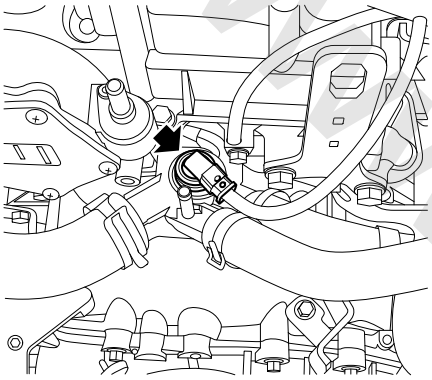

S1133547

5. Disconnect the coolant temperature sensor connector.
6. Pull up and remove the coolant temperature sensor.
7. Prepare a proper container to collect the spilled coolant.

Refit

1. Clean the coolant temperature sensor.
2. Check the sensor seal ring for aging, deformation, fracture, etc., if any, the sensor assembly is to be replaced.
3. Fit the coolant temperature sensor, and fix it with clips.
4. Connect the coolant temperature sensor connector.
5. Fit the vacuum hose to the vacuum pump.
6. Connect the battery negative.
7. Check the coolant level, refill if necessary.

Manifold Absolute Pressure Sensor

Remove

1. Disconnect the battery negative.
2. Disconnect the manifold absolute pressure sensor connector.
3. Remove 1 screw fixing the manifold absolute pressure sensor to the manifold.

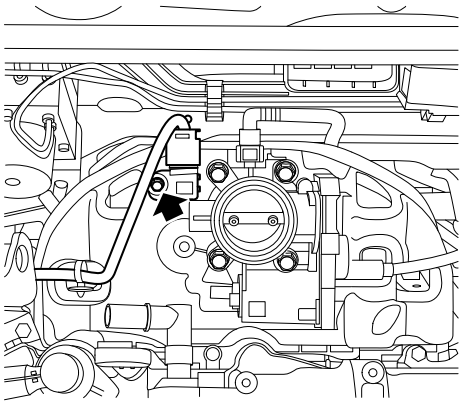

S1133548

4. Remove the manifold absolute pressure sensor.

Refit

1. Fix the manifold absolute pressure sensor to the manifold, fit 1 screw, and tighten to **4–6Nm**.
2. Connect the manifold absolute pressure sensor connector.
3. Connect the battery negative.

www.cargeek.ir

Camshaft Position Sensor

Remove

1. Disconnect the battery negative.
2. Disconnect the connectors from the intake/exhaust camshaft position sensor respectively.
3. Remove 2 bolts securing the intake/exhaust camshaft position sensor to the cylinder block respectively, then remove 2 camshaft position sensors.

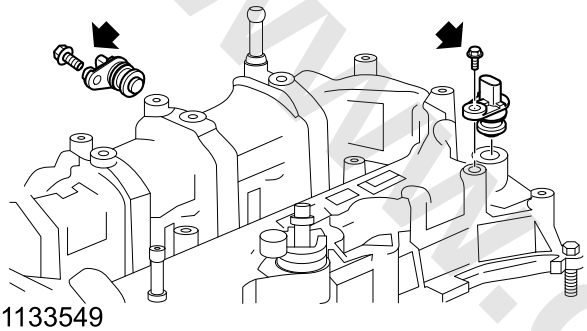

S1133549

Refit

1. Clean 2 camshaft position sensors and the mating surface.
2. Check the sensor sealing washer for aging, deformation, crack, etc. If any, replace the sensor assembly.
3. Secure the intake and exhaust position sensors to the camshaft cover, fit 2 bolts and tighten to **8–12Nm**.
4. Connect 2 camshaft position sensor connectors.
5. Connect the battery negative.
6. Place the ignition switch in ON, and use **VDS** to perform "**ECM** Adaption Reset".
7. Wait for 2-5 seconds, and turn off the ignition switch, then re-start the vehicle.

Camshaft Phase Adjustment Solenoid Valve

Remove

1. Disconnect the battery negative.
2. Remove the engine hood.
3. Disconnect the connectors of 2 camshaft phase adjustment solenoid valves.
4. Remove 2 bolts used for fixing 2 camshaft phase adjustment solenoid valves to the engine.

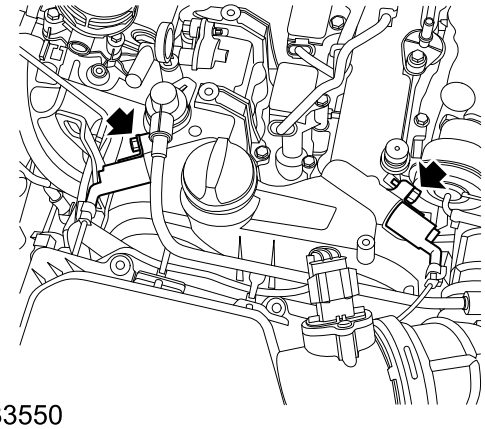

S1133550

5. Remove 2 camshaft phase adjustment solenoid valves.

Refit

1. Fix 2 camshaft phase adjustment solenoid valves to the engine, fit 2 bolts, and tighten them to **8–12Nm**.
2. Connect the connectors of 2 camshaft phase adjustment solenoid valves.
3. Fit the engine hood.
4. Connect the battery negative.

www.cargeek.ir

www.cargeek.ir

Oil Pressure Sensor

Remove

1. Disconnect the battery negative.
2. Remove the starter motor.

Start Motor Remove

3. Disconnect the oil pressure sensor connector.
4. Place the oil sink under the sensor to collect the spilled oil.
5. Remove the oil pressure sensor with the socket.

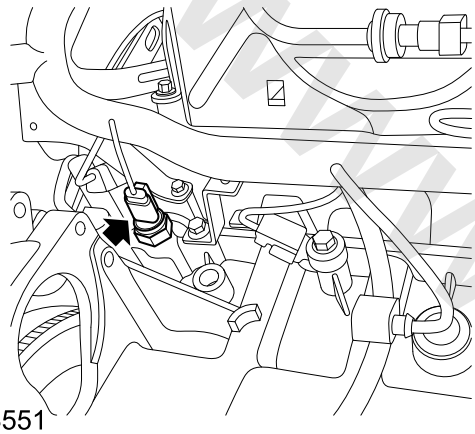

S1133551

Refit

1. Clean the threads of the oil pressure sensor.
2. Fit new sealant to the oil pressure sensor, fit the oil pressure sensor to the engine, tighten the sensor to **31–39Nm**, and check the torque.
3. Connect the connector of the oil pressure sensor.
4. Fit the starter motor.

Starter Motor Refit

5. Connect the battery negative.
6. Check the engine oil level, and refill if necessary.

Knock Sensor

Remove

1. Disconnect the battery negative.
2. Remove the starter motor.

Start Motor Remove

3. Disconnect the knock sensor connector.
4. Remove 1 bolt fixing the knock sensor to the cylinder block, and remove the knock sensor.

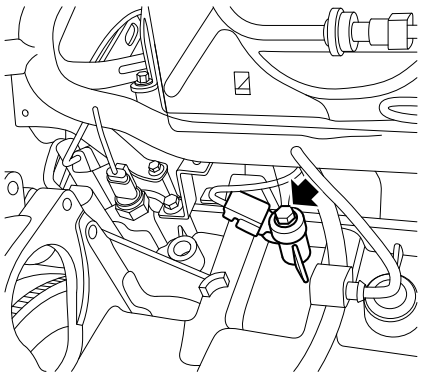

S1133552

Refit

1. Clean the mating surface of the knock sensor and cylinder block.
2. Fix the knock sensor to the cylinder block, fit 1 bolt and tighten to **16–24Nm**.
3. Connect the knock sensor connector.
4. Fit the starter motor.

Starter Motor Refit

5. Connect the battery negative.

www.cargeek.ir

Oxygen Sensor

Remove

1. Disconnect the battery negative cable.
2. Disconnect the front oxygen sensor connector (1).
3. Remove the front oxygen sensor (2) from the three-way catalyst with the special tool **TEN00011**.

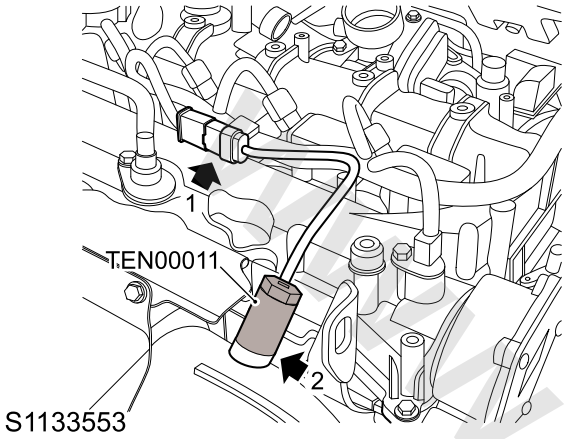

4. Remove the bottom deflector.

Bottom Deflector Remove

5. Disconnect the rear oxygen sensor connector (1).
6. Remove 1 bolt fixing the rear oxygen sensor connector bracket to the gearbox (2).

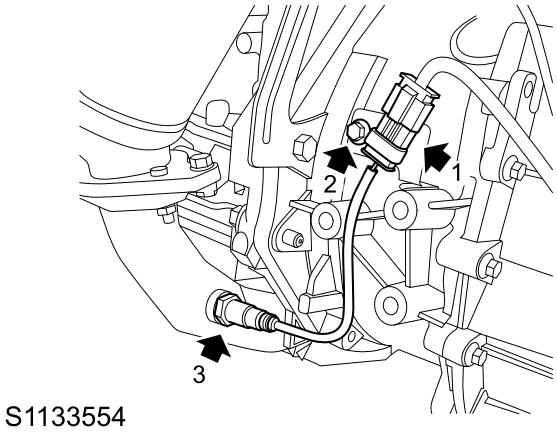

7. Remove the rear oxygen sensor (3) from the front exhaust pipe with the special tool **TEN00011**.

Refit

1. Fit the rear oxygen sensor to the front exhaust pipe with the special tool **TEN00011**, tighten to **40–60Nm**, and check the torque.
2. Fit 1 bolt fixing the rear oxygen sensor connector bracket to the gearbox, and tighten to **14-18Nm**.
3. Connect the rear oxygen sensor connector.
4. Fit the bottom deflector.

Bottom Deflector Refit

5. Fit the front oxygen sensor to the three-way catalyst with the special tool **14-18Nm**, tighten to **40–60Nm**, and check the torque.
6. Connect the front oxygen sensor connector.
7. Connect the battery negative cable.

www.cargeek.ir

Canister Solenoid

Remove

1. Disconnect the battery negative.
2. Disconnect the connector of carbon canister solenoid valve (1).
3. Disconnect the vacuum hose from the canister solenoid (2).
4. Disconnect the fuel breathing hose from the canister solenoid (3).
5. Remove the canister solenoid from the canister solenoid bracket of the engine cylinder block.

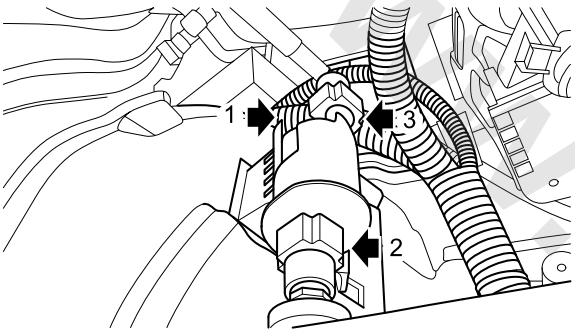

S1133555

Refit

1. Connect the fuel breather hose to the canister solenoid valve.
2. Connect the vacuum hose to the canister solenoid valve.
3. Connect the canister solenoid valve connector.
4. Fix the canister solenoid valve to the canister solenoid valve bracket of the engine cylinder block.

Turbocharger Electrically Controlled Bypass Valve

Remove

1. Disconnect the battery negative.
2. Disconnect the connector of the turbocharger electrically controlled bypass valve (1).
3. Disconnect 3 hoses connected with the turbocharger electrically controlled bypass valve (2).
4. Remove 1 bolt fixing the control valve to the turbocharger, and remove the turbocharger electrically controlled bypass valve (3).

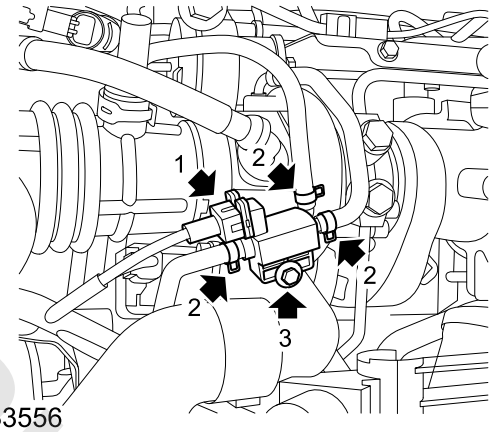

S1133556

Refit

1. Fix the turbocharger electrically controlled bypass valve to the turbocharger, fit 1 bolt, tighten to **4–6Nm**, and check the torque.
2. Connect 3 hoses to the turbocharger electrically controlled bypass valve.
3. Connect the connector of the turbocharger electrically controlled bypass valve.
4. Connect the battery negative.

www.cargeek.ir

Turbocharger Relief Valve

Remove

1. Disconnect the battery negative cable.
2. Disconnect the turbocharger inlet pipe from the turbocharger and remove the pipe.

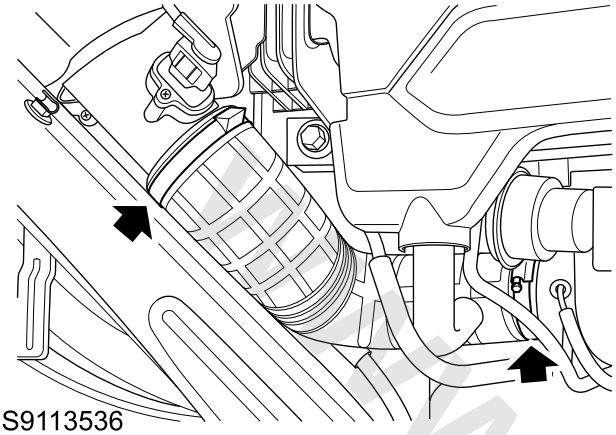

S9113536

3. Disconnect the joint (1) of turbocharger to intercooler hose turbocharger from the turbocharger and remove the pipeline.

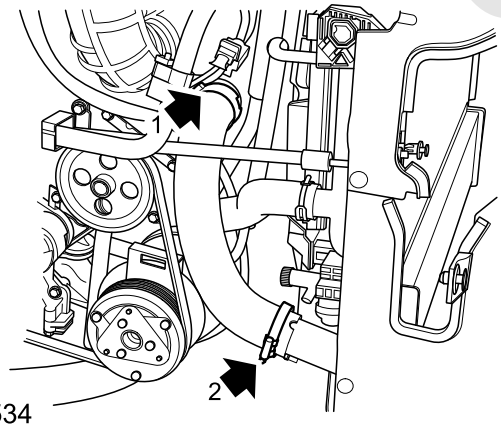

S9113534

4. Disconnect a hose of the turbocharger electrically controlled relief valve and remove the pipeline.

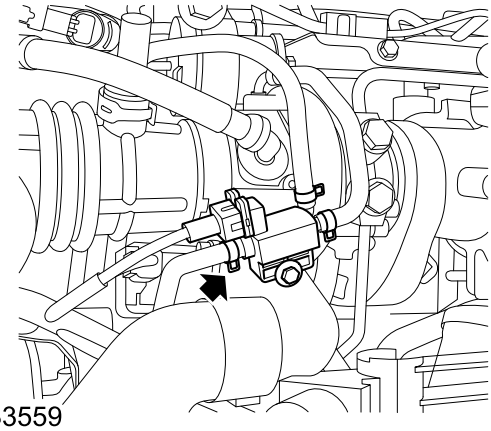

S1133559

5. Disconnect the connector of the turbocharger relief valve.
6. Remove 3 bolts fixing the turbocharger relief valve to the turbocharger.

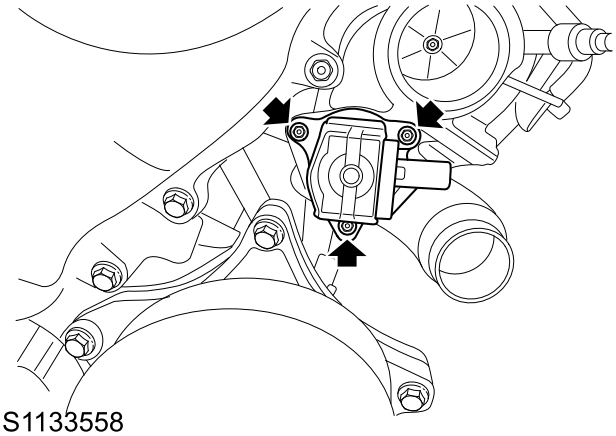

S1133558

7. Remove the turbocharger relief valve.

Refit

1. Fix the turbocharger relief valve to the turbocharger, fit 3 bolts, tighten to**8–10Nm**, and check the torque.
2. Connect the connector of the turbocharger relief valve.
3. Connect a hose of the turbocharger electrically controlled bypass valve.
4. Remove the turbocharger to intercooler hose to the turbocharger.
5. Fit the turbocharger inlet pipe to the turbocharger, and fix it with clamps.
6. Connect the battery negative cable.

www.cargeek.ir

Intake Air Temperature and Pressure Sensor

Remove

1. Disconnect the battery negative cable.
2. Remove 2 bolts fixing the expansion tank to the upper radiator beam, remove the expansion tank.
3. Disconnect the connector of the intake air temperature pressure sensor.
4. Remove 1 bolt fixing the intake air temperature and pressure sensor to the hose from intercooler to engine, and remove the intake air temperature and pressure sensor.

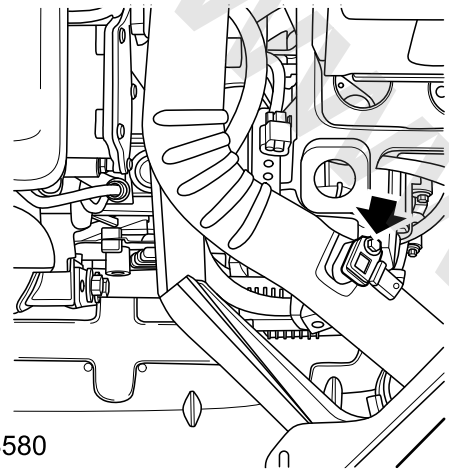

S1133580

Refit

1. Fix the air intake temperature and pressure sensor to the hose from intercooler to engine, fit 1 bolt, and tighten it to **3–4Nm**.
2. Connect the connector of the intake air temperature and pressure sensor.
3. Fix the expansion tank the battery bracket, fit 2 bolts, tighten them o **4–6Nm**, and check the torque.
4. Connect the battery negative cable.

www.cargeek.ir

www.cargeek.ir

www.cargeek.ir

Special Tools

Tool Number	Description	Picture
TEN00121	Injector remove tool	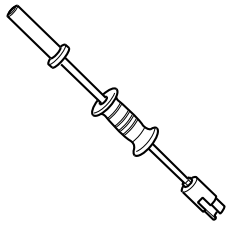 TEN00121
TEN00140	Fuel injector remover	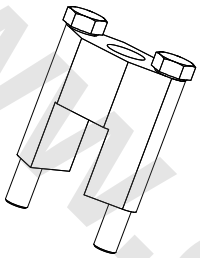 TEN00140
TEN00064	Injector seal installer and sizer	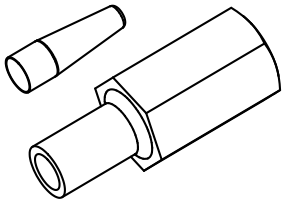 TEN00064
TEN00011	Wrench O2 sensor	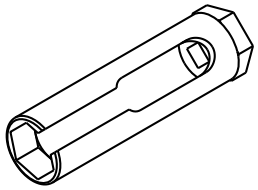 TEN00011

www.cargeek.ir

www.cargeek.ir

www.cargeek.ir

Engine Electrical System-2.0T

Specifications

Torque

Description	Value
Bolt - Alternator to cylinder body	45–53Nm
Bolt -Harness bracket to Alternator	5–7Nm
-	
Bolt - Starter motor	75–90Nm
Nut- Battery lead to starter motor	11–13Nm
Bolt - Auto tensioner	23–28Nm
Bolt - Battery Negative Lead to Left Front Carling	7–10Nm
Nut - Battery Top Fusebox to Engine Compartment Fusebox	5–7Nm
Nut - Battery Positive Cable to Battery Top Fusebox	5–7Nm
Nut - nut to battery clip	3–5Nm

www.cargeek.ir

www.cargeek.ir

Description and Operation

System Layout

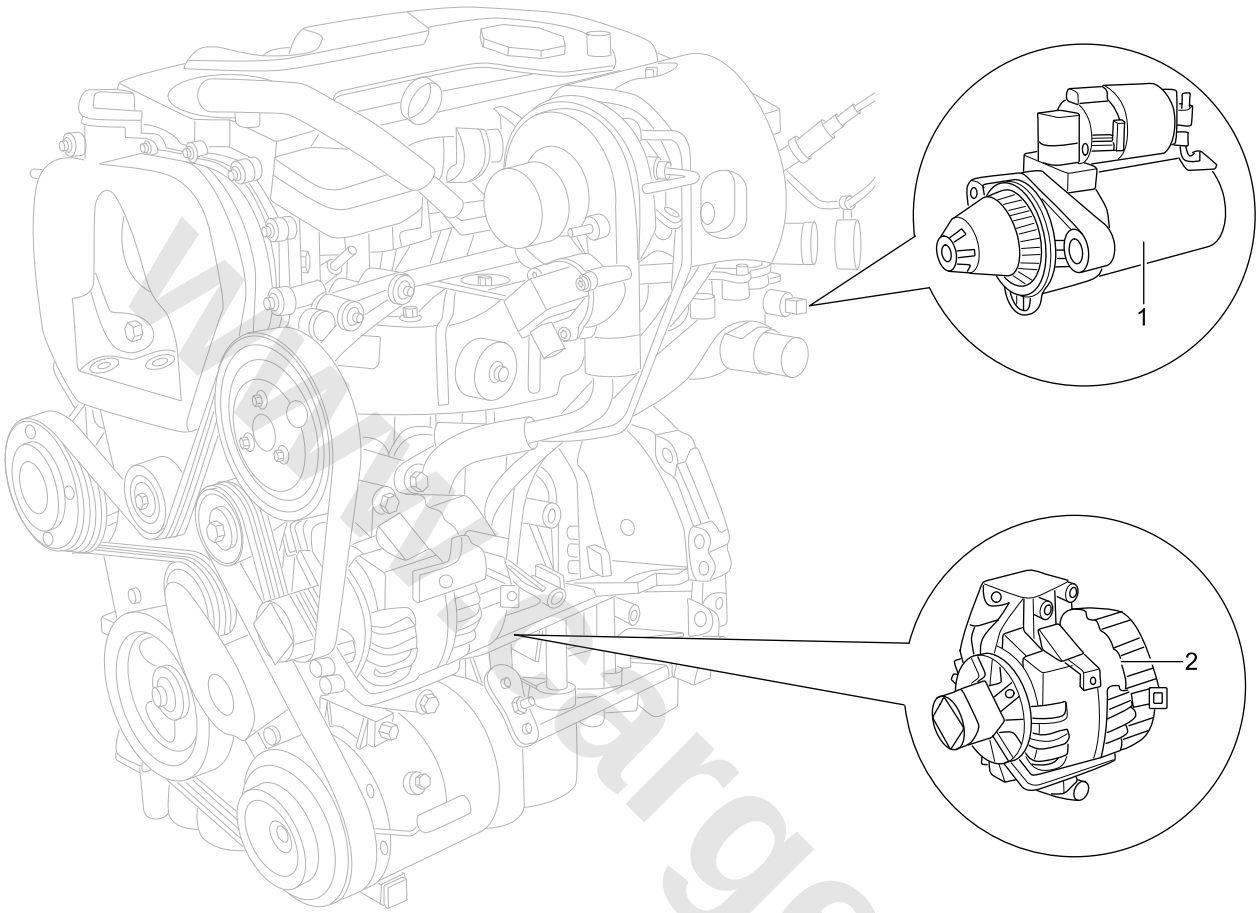

S1120501

1. Starter
2. Alternator

www.cargeek.ir

www.cargeek.ir

www.cargeek.ir

System Control Diagram

Control Diagram (without PEPS)

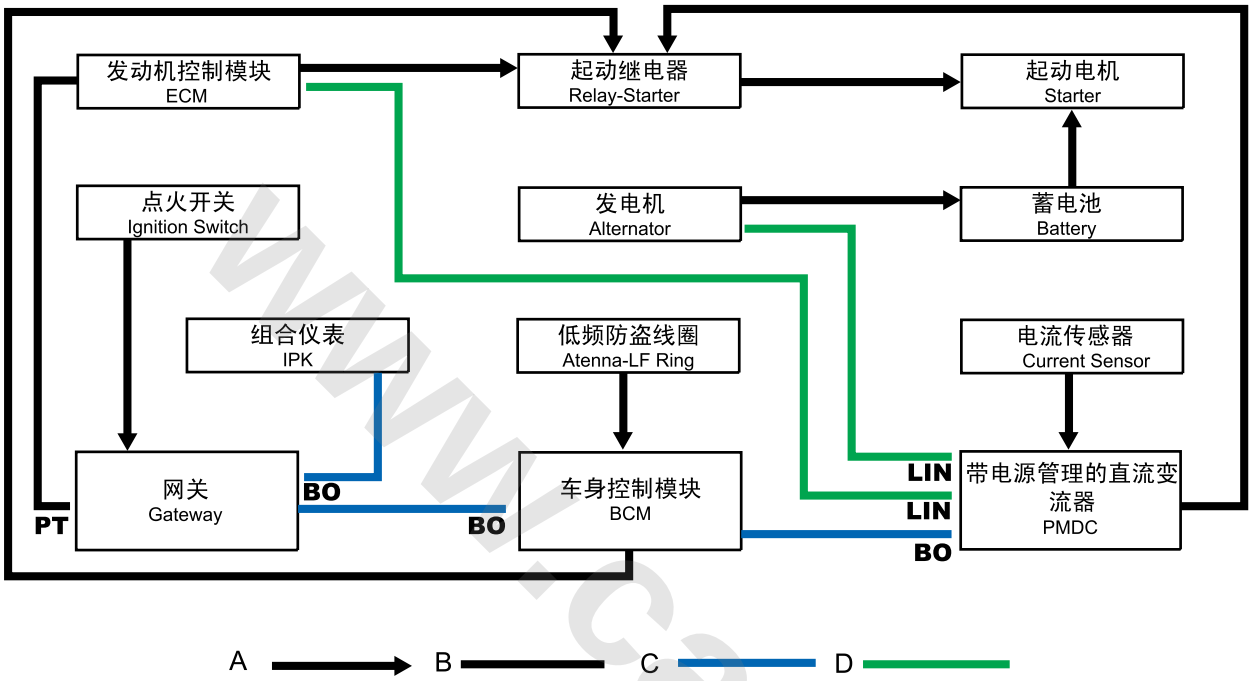

S1121501

A = Hard Wire; B = Power HS CAN Bus; C = Body HS CAN Bus; D = LIN Bus

www.cargeek.ir

www.cargeek.ir

Control Diagram (with PEPS)

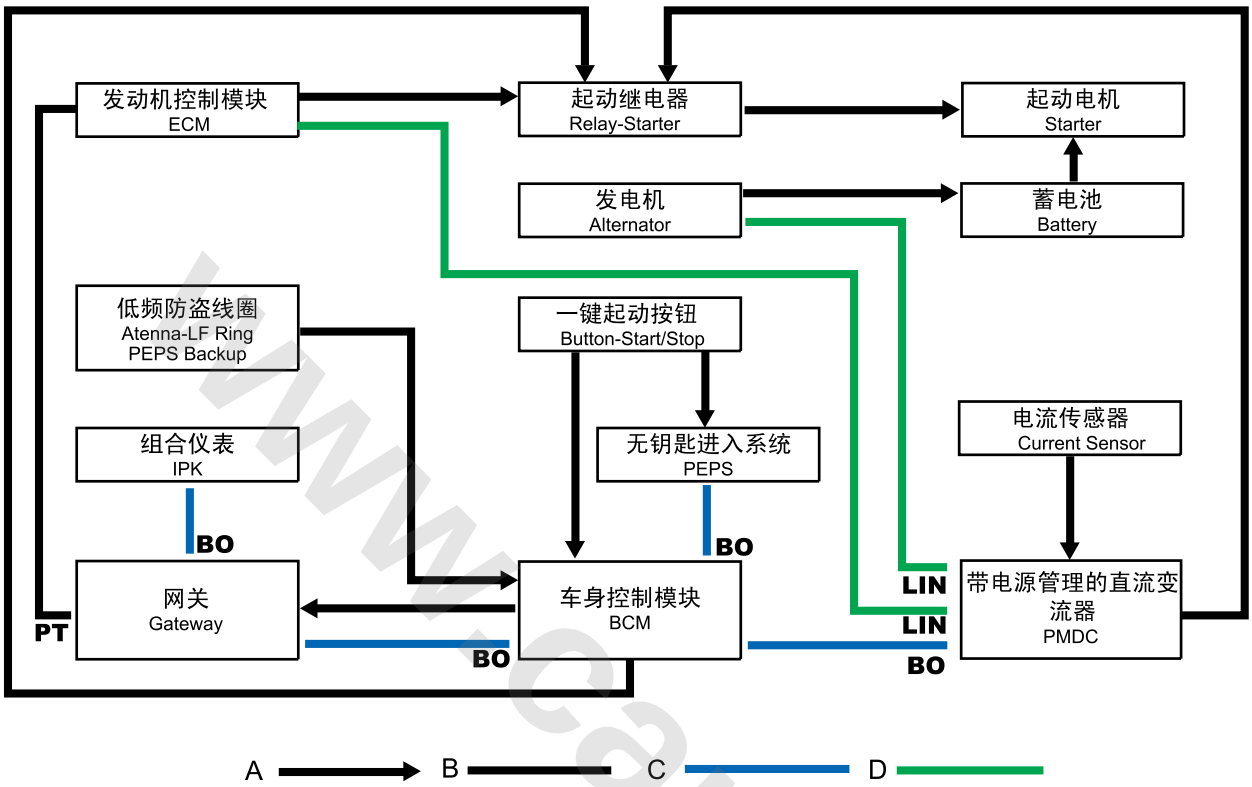

S1121502

A = Hard Wire; B = Power HS CAN Bus; C = Body HS CAN Bus; D = LIN Bus

www.cargeek.ir

Description

Overview

The starting system of the vehicle includes a 12V starter motor, which can convert the electric energy into the mechanical energy.

Starter Motor

The starter motor is located at the left rear side of the engine, it is fixed to the threaded holes on the transmission housing with 2 flange bolts. The mechanical energy of the pinion drives the flywheel, the transmission ratio of them enlarges the torque so as to provide sufficient torque.

Each of the starter motors is of the pre-engaged type, which includes a permanent magnet motor, an overdrive clutch and an solenoid valve. Both starter motors adopts the conventional configuration of pinion and in-line plunger motor with solenoid installed on it. The single connector on the starter motor provides connection for the engine locking device. The starter motor is directly connected to the positive pole of the battery through the 25mm² cable connecting to the copper stud.

Alternator

The alternator at the right front of the engine is secured on the cylinder block by 3 bolts. The drive pulley is connected to the tail end of the rotor, which is driven by the drive belt of the crankshaft. The belt tension is maintained by the frictional restriction tension pulley. The instrument pack is used in conjunction with a charging indicator lamp which will illuminate when high/low voltage failure and mechanical fault occurs in the alternator.

The alternators includes a stator, a rotor, a rectifier and a regulator. By using the 12mm² cable, the alternator is connected to the battery and ground through the fuse.

The stator includes a stator core, and a stator coil which has brackets supporting at both ends. The stator is made of the thin and soft iron sheet, its slot fits with the stator coil, and is fixed on the alternator housing. The stator has three sets of coils which are made of enamelled copper wires of large sizes. These 3 coil windings are connected in a "triangle connection" scheme, thus the tail end of each winding is connected to the other 2 windings. The output current is provided from the other end of each winding. The stator core allows the magnetic flux from the rotor magnetic pole to flow through the stator coil.

The rotor consists of an exciting winding, which is wound on the iron core and installed on the shaft. When the current flows through the exciting windings, both ends of the iron core at the north and south pole extend. The rotor is located in the stator, which is fitted on the bearing so as to guarantee stable rotation and enable it to support the high load in the drive belt tension application. The rectifier located at the rear side of the alternator includes 6 semiconductor diodes, which are mounted on a heat sink for heat dispersion. 3 diodes are located at the positive pole, the other 3 at the negative pole.

The integrated circuit regulator is also located at the rear side of the alternator.

Battery

Battery Instruction

All vehicles have a 12V maintenance-free lead-acid battery equipped at the left side of the engine compartment, which is refitted on the pressed steel bracket fixed on the transmission suspension, fastened by the battery retaining strap, and covered by the battery heat shield. The battery electrodes are a chuck-connected pole type.

Warning: Battery fluid (electrolyte) contains sulphuric acid. It may cause severe burns if it gets on your skin or in your eyes. Wear protective clothing and a face shield. If electrolyte gets on your skin or clothes, immediately rinse it off with water. If electrolyte gets in your eyes, immediately flush eyes with water for at least 15 minutes and seek medical help.

The battery in the electrical system has three main features. Firstly, the battery provides power for starting the engine. Secondly, the battery is used as the voltage adjuster of the electrical system. Lastly, the battery can provide energy in a certain amount of time when the electrical demand exceeds the engine output.

Compared with the conventional battery, the packaging battery has following advantages:

- There is no need to add water during the entire life cycle of the battery.
- It adopts the overcharge protective measures. If the voltage applied to the battery is too high, it will not receive the excess current as the conventional battery will. For the conventional battery, if the battery continues to be charged when the voltage is too high, air leakage will occur, causing fluid loss.
- Compared with the conventional battery, self discharge does not tend to occur for this kind of battery. This is especially important when the battery is not used for a long time.
- For the cigar lighter and smaller electrical equipment, the electric quantity supplied is more reliable.

The model with the Start/Stop function is equipped with H6 maintenance-free lead-acid battery. It's a type of Absorbed Glass Mat (**AGM**) battery. Compared with the traditional flooded starting-type battery, it has stronger charging acceptance capability, and better than the traditional starter battery in terms of deep cycle discharging capability, cycle life,

www.cargeek.ir

etc., which is more suitable for applying in the occasions that the start-stop system needs to repeat the start for several times.

For different battery types equipped, on the top of some batteries there is a battery condition indicator. Examine the indicator periodically to check the battery's condition. When the indicator shows:

- GREEN - the battery is in a good state of charge.
- DARK (turning to black) - the battery needs charging.
- CLEAR (or light yellow) - the battery must be replaced.

Battery Charging

When the engine is not running, by the reasons of electric equipments opening for long time, vehicle creepage and longtime parking, or some malfunction in the alternator, the battery might not be charged and will be flat, the vehicle even not can be started. On this condition, the battery need to be charged.

Caution: When charging or Emergency Starting, the negative cable should be connected to the body earth well, while not the negative pole.

Battery Appearance checking Before Charging:

- If the shell is broken or there is a leak, DO NOT charge the battery and replace it after finding the reason.
- If the pole is broken, DO NOT charge the battery and replace it after finding the reason.
- The bulge battery for over discharging or over charging, CAN NOT be charged. The battery should be replaced.
- Before charging, clean the poles, rub off rust. And smear some butter to avoid electricity corroding.

Charging Announcements:

- PLEASE pull on the security glass.
- Keep ventilation and normal temperature when charging.
- DO NOT smoke when charging, and avoid kindling in.
- After charging, connect the positive cable at first. Before charging, disconnect the negative cable at first.

Battery Charging Operation:

- Connect two positive poles between charger and battery, and connect two negative poles between charger and battery as well. If the battery is not removed from the vehicle, PLEASE connect the negative cable form charger negative pole to the body earth well.
- Ensure the poles are clean, and the charging circuit loop is all right.
- For the type of exhausting battery, we suggest charge isobarically with the limited voltage at 16.0±0.1V and the limited current at 2A. When it show that the current value is lass than 2A, it means the battery is brimming.
- For **AGM** battery, we suggest repairer MUST use the very charging equipment with voltage and current limited function, when charging, control the voltage at the area of 14.1—14.8V, and the current value MUST less than 25% of the rating capacity. For example, if the rating capacity value is 70Ah, then the limited current value is 17.5A. When the charging current is less than 0.5A, or current is small and having no change evidence, it means the battery is brimming.
- During charging process, if the battery temperature is higher than 40℃, MUST stop charging, and after he battery temperature falling to environment temperature, the battery can be charged again.
- DO NOT charge the battery under 0℃.

For the **AGM** battery whose voltage value is under 11.0V, at the first of charging it may appear the phenomena that the battery is cannot be charged. Because badly discharging, the inverse proportion of vitriol in battery is too small, the liquid is close to pure water, battery's inner resistance value is too high. With the charging going on, the inverse proportion of vitriol in battery will rise up, the charging process could become breath again.

Battery Measure

Battery can be measured by familiar equipment on the after sales market, such as Midtronics series instruments. For **AGM** battery measure, repairer MUST use the equipment with **AGM** measure function. If the equipment is not type-suited, the measured data can not be used to judge the battery's status.

Battery Replacement

Caution: When removing the battery, ensure that the alarm is disarmed and that the ignition is switched off. Always disconnect the negative terminal first and then the positive terminal. When refitting the battery, always fit the positive terminal first followed by the negative terminal.

Refer to the chapter "Battery-remove/refit" when replacing the battery.

When charging using outer equipments or Emergency Starting, the negative cable should be connected to the body earth well, while not the negative pole.

Current Sensor *

The vehicle with stop/start function is equipped with the battery current sensor which is widely used for measuring of DC, AC and pulse current. The sensor is used the open-loop hall effect technique, that the battery current can be measured

www.cargeek.ir

with the sensor being coverd around the battery negative cable, which could simplify the procedures of installation and maintenance.

The output of sensor is the pulse width modulation (**PWM**) output signal proportional to the primary current. The current sensor is powered by the single 5V voltage.

The output signal of the HAB 60–S current sensor used on the vehicle is the standard **PWM** signal of 125**Hz**, and the linearity is 0.2%. The **PWM** signal can suppress the strong interference effectively inside the vehicle.

This series of current sensors are used the ultrasonic seal welding technique, which is waterproof and dustproof that ensure the safe use in the engine compartment.

End view and PIN information of current sensor harness connector BY033

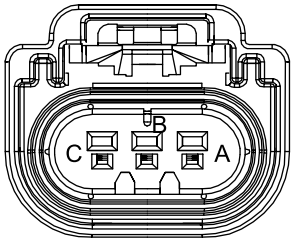

PIN No.	Description
A	Current Sensor 5V Power Supply
B	Ground
C	Current Sensor **PWM** Output

www.cargeek.ir

www.cargeek.ir

Operation

Starter Motor

When the ignition key is in "ON" position, the engine locking device in the instrument pack will compare the code stored in the ignition key with the code stored in the locking device. If these codes match, the signal will be sent to the starter motor relay in the engine compartment fuse box through **BCM** and **ECM**. The starter motor relay supplies power to the starter motor solenoid. The solenoid winding is powered on, allowing the pinion engage with the flywheel tooth ring. Through the engaging lever, drive the pinion to engage with the flywheel tooth ring. If the gear wheel is engaged incompletely, the flexible connection will enable the solenoid to close the contact of the motor and battery power supply connection. Thus, the high current may flow to the motor enabling the gear engagement. The pinion rotates through the one-way clutch, turning the flywheel/starter tooth ring on the drive disc.

Once the engine is started, the speed of the pinion will exceed the speed of the starter motor. If the ignition key is kept in the ignition position, the one-way clutch will decrease its protection to the motor. When the ignition key is released, the power to the solenoid will be cut off, the switch contact is open, the spring force will withdraw the pinion from the flywheel tooth ring.

When starting the engine, to allow the starter motor get the maximum current, some electric load will be cut off when the ignition key is moved to the ignition position. The power supply to the headlights, heated rear window (**HRW**) , heating, ventilation and air conditioning (**HVAC**) , blower fan will be switched off. when the engine start is complete, these loads are to be reactivated respectively so as to the restrict the battery discharge.

After the following delays, the electric loads will be switched on again:

- **HVAC** after the blower is stopped for 1 second
- **HRW** after it is stopped for 1.5 seconds

If the starting time exceeds 15 seconds, the power supply of the starter motor will be cut off, all electric load will be powered on again immediately.

Alternator

Alternator uses the self-excited system, where many diodes supply part of the current generated by the alternator for the rotors. Alternator can not supply the initial current required for start-up of the charging procedure. Initial current is supplied by the battery power supply through ignition switch to activate the exciting winding to start up the charging procedure. When the ignition switch is turned on, supply the battery voltage similarly by the charging warning light. And flash the warning light and supply initial current to the alternator by grounding of the alternator.

When starting the engine, the rotor is rotating in the stator, generating the 3-phase alternating current (**AC**).The generated alternating current is not suitable for the vehicle electrical system use, which must be rectified by the semiconductor diodes of the rectifier. The diodes only allow the single direction current, to guarantee the output current is rectified. The diodes in the rectifier also prevents the current from flowing from the battery to AC alternator when the output voltage of AC alternator is lower than the battery voltage.

The regulator has a power transistor, which is grounded at the ground side of the magnetic field, acting as a quick switch of the magnetic field switch. Thus, it regulates the voltage output according to the internal induced voltage, to protect against the overcharge and the damage to the vehicle electrical components caused by it. The output is restricted to approximately 14.2V, and it is protected by the over-voltage protection diodes. This voltage value allows the AC alternator change the output voltage according to the charging condition of the battery, and charge the battery when the battery is low, for example, operating the starter motor, and decreasing the charging rate to zero when the battery is fully charged, so as to avoid the overcharge.

The alternator communicates with the DC converter fitted with the power management(PMDC) via the **LIN** line. When the output voltage of the alternator is lower than the battery voltage, the charging indicator illuminates. When the speed of the rotor rises, the output voltage increases rapidly to increase the potential difference at the diode output side. With the increase of the voltage, when the output voltage of the alternator is same with the battery voltage, the charging warning lamp will turn off. Then the alternator generates sufficient self-excited current via the diode in the magnetic field and begin to charge the battery.

Failure

The alternator may have malfunctions or provide wrong signals due to the following conditions:

- Internal regulator malfunction
- Integrated diode component malfunction
- Stator winding open circuit
- Stator winding ground short circuit
- Exciting winding short circuit
- Exciting winding open circuit
- Mechanical malfunction
- External harness short circuit
- External harness has a break circuit.

www.cargeek.ir

www.cargeek.ir

Service Procedures

Alternator

Remove

1. Disconnect the battery negative cable.
2. Remove the auxiliary drive belt.

☞**Auxiliary Drive Belt Remove**

3. Remove the turbocharger intake hose.

☞**Turbocharger Intake Hose Remove**

4. Remove the turbocharger control solenoid valve.

☞**Turbocharger Control Solenoid Valve Remove**

5. Remove 3 bolts fixing the E-PAS idler assembly support to cylinder head, and remove the support and E-PAS idler assembly.

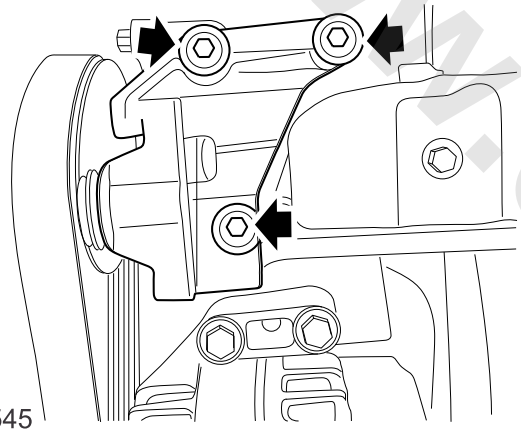

S1113545

6. Remove the harness bracket bolt from the engine and take away the harness.

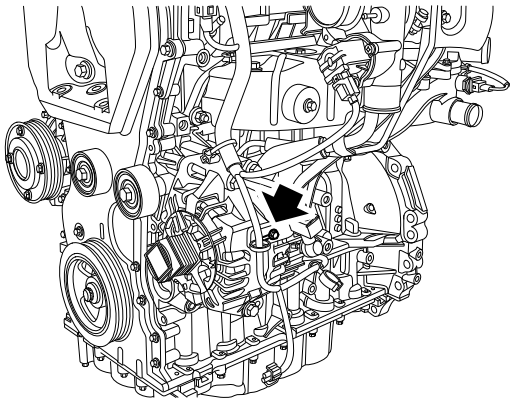

S1123501

7. Loosen and remove the connector from the alternator.
8. Remove 3 bolts securing the alternator and cylinder block.

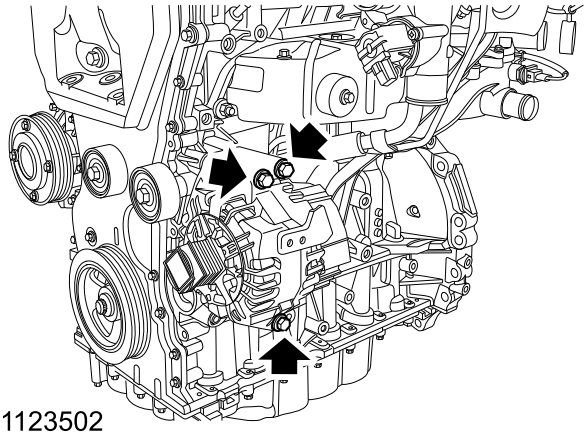

S1123502

9. Remove the alternator.

Refit

1. Clean the mating surface of the alternator and cylinder block.
2. Locate the alternator to the cylinder block, fit 3 bolts and tighten to **45–53Nm**.
3. Locate the harness bracket, fit the bolts and tighten to **5–7Nm**.
4. Fit the connector of the alternator and engine harness.
5. Fix the E-PAS idler assembly support to the cylinder head, fit 3 bolts, tighten to and check the torque.
6. Fit the turbocharger control solenoid valve.

☞**Turbocharger Control Solenoid Valve Refit**

7. Fit the turbocharger intake hose.

☞**Turbocharger Intake Hose Refit**

8. Fit the auxiliary drive belt.

☞**Auxiliary Drive Belt Refit**

9. Connect the battery negative.

www.cargeek.ir

Auxiliary Drive Belt

Remove

1. Disconnect the battery negative cable.
2. Raise the vehicle to a suitable height for operation.

Warning: Do not work on or under a vehicle supported only by a jack. Always support the vehicle on safety stands.

3. Remove the liner of the right front wheel house.

☞ **Front Wheel House Liner Remove**

4. Insert the **TEN00119** into the 4 square holes of the tensioner, and turn the torque wrench counterclockwise to disconnect the tensioner from the belt.

Caution: *The torque shall be less than 82Nm.*

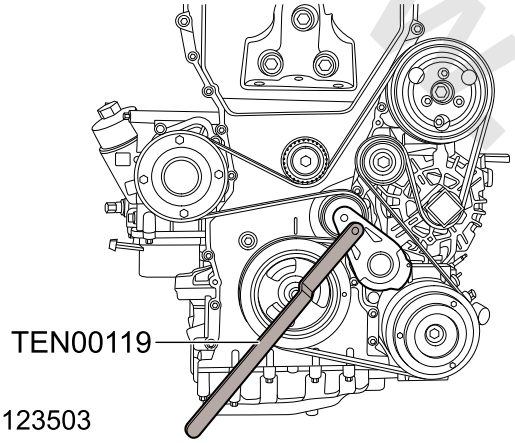

S1123503

5. Keep the tension pulley at the position, and use an appropriate pin to fit it into the hole on the rear panel of the tension pulley.

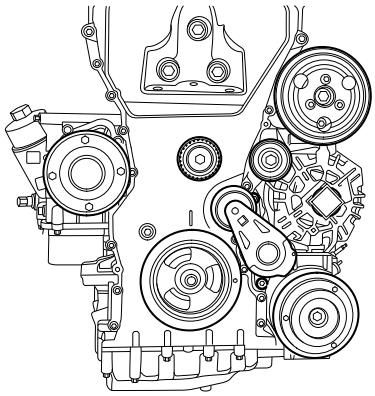

S1123504

6. Take out the belt.

Refit

1. In the sequence shown, fit the auxiliary drive belt into each pulley groove, tension pulley and idler.

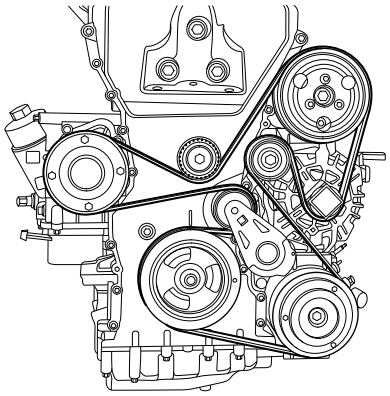

S1123505

2. Fit the **TEN00119** into the four holes of the tensioner, turn it counterclockwise to release the tensioner, and remove the locking pin. Ensure the belt of the multi-wedge pulley on the position shown is stuck into the groove, only put the belt of the wheel in the middle of the pulley and mark "Qualified" with the marker. Ensure the belt fitted is basically in the middle of the tension pulley and a minimum margin of 2mm shall be left on both sides of the tension pulley.
3. Take out the tool.
4. Fit the right from wheel house liner.

☞ **Right Front Wheel House Liner Refit**

5. Lower the vehicle.
6. Connect the battery negative cable.

www.cargeek.ir

Starter Motor

Remove

1. Disconnect the battery negative cable.
2. Raise the vehicle to a suitable height for operation.

Warning: Do not work on or under a vehicle supported only by a jack. Always support the vehicle on safety stands.

3. Disconnect the connector (1) from the starter motor.

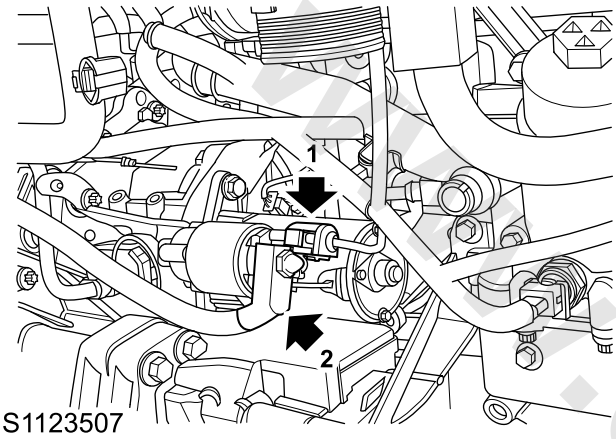

S1123507

4. Remove the nut, and disconnect the battery wire (2) from the starter motor.
5. Unscrew 2 bolts fixing the starter motor and remove the starter motor.

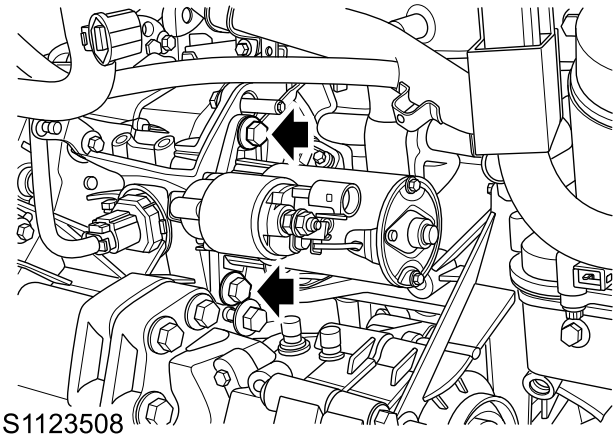

S1123508

Refit

1. Clean the mating face of the starter motor and transmission. Clean the pin and pin hole.
2. Locate the starter motor to the transmission housing, fit and tighten 2 bolts to **75–90Nm**.
3. Connect the battery wire to the starter motor, and tighten nuts to **11–13Nm**.
4. Fit the harness connector.
5. Lower the vehicle.
6. Connect the battery negative cable.

Automatic Tensioning Wheel - Auxiliary Drive Belt

Remove

1. Remove auxiliary drive belt.

☞ **Auxiliary Drive Belt Remove**

2. Remove 2 bolts of the automatic tensioning wheel.

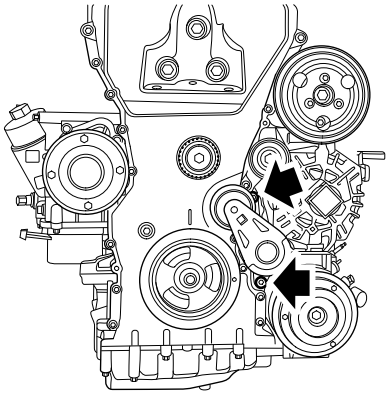

S1123506

3. Remove the automatic tensioning wheel of the auxiliary drive belt.

Refit

1. Locate the automatic tensioning wheel to the cylinder block, fit 2 bolts and tighten to **23–28Nm**.
2. Fit the auxiliary drive belt.

☞ **Auxiliary Drive Belt Refit**

www.cargeek.ir

Battery Negative Cable

Remove

1. Disconnect the battery negative cable.
2. Release the bolt fixing negative cable to the left front longitudinal beam.

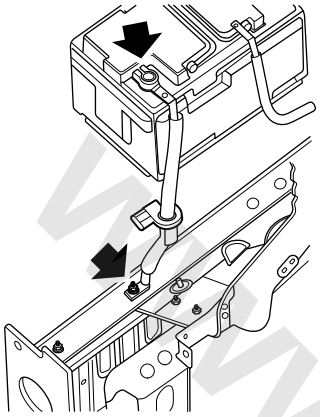

S8650001

3. Take off the battery negative cable.

Refit

1. Arrange the battery negative cable in the engine compartment and ensure correct route.
2. Fit the bolt fixing the negative cable to the left front longitudinal beam and tighten to **7–10Nm**.
3. Connect the negative cable to the battery negative terminal.

Battery Positive Cable

Remove

1. Disconnect the battery negative cable.
2. Disconnect the battery positive cable. Release the nut on the two ends of the positive transition cable to remove the cable, and disconnect the nut fixing the positive transition cable to the battery fuse box.

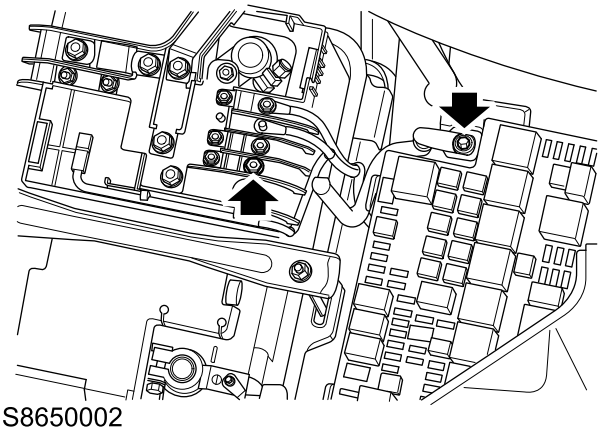

S8650002

3. Raise the vehicle to a proper height with a lift.
4. Remove the nut fixing the battery cable to the starter motor and release the clip on the transmission.

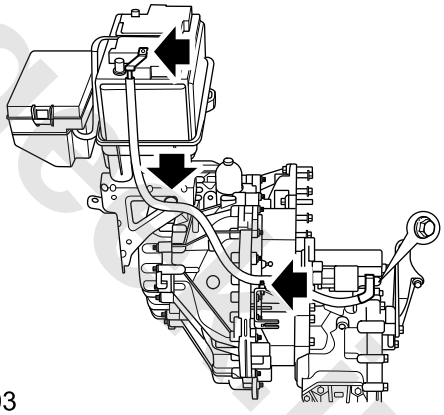

S8650003

5. Lower the vehicle.
6. Release the clips and clamps.
7. Take off the battery positive cable.

Refit

1. Arrange the battery positive cable in the engine compartment and ensure correct route.
2. Fit the nut fixing the positive transition cable to fuse box, and tighten it to **5–7Nm**.
3. Fit the nut fixing the positive cable to the battery fuse box, and tighten it to **5–7Nm**.
4. Close the cover of the fuse box.
5. Secure cable clips and clamps.
6. Raise the vehicle to a proper height with a lift.
7. Fit the nut fixing the positive cable to the starter motor,

www.cargeek.ir

www.cargeek.ir

and tighten it to **11–13Nm**.

8. Lower the vehicle.
9. Reconnect the battery cable terminal at first, then connect the battery negative cable.

Battery

Remove

1. Disconnect the battery cables, negative cable at first.
2. Remove the battery top fuse box.

Battery Top Fuse Box – Remove

3. Release the nuts of the battery lock block and remove it.

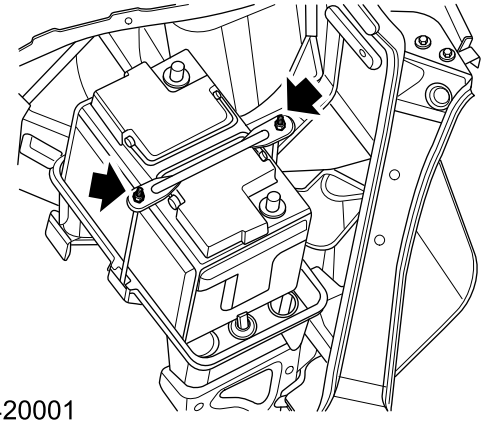

S8420001

4. Remove the battery cover.
5. Take off the battery from the battery tray.

Refit

1. Fit the battery to the battery tray properly.
2. Fit the battery cover.
3. Use mineral grease to clean the battery poles.
4. Fit the lock block. Firstly, pre—screw the nuts of the lock block to let the bolts come out the nuts about 11mm. Then tighten the nuts to **3–5Nm** severally and check the torques.

Warning: Keep the lock block at the horizontal when screwing.

5. Fit the battery top fuse box.

Battery Top Fuse Box Refit

6. Connect the battery cable, positive cable at first, then connect the negative one.

www.cargeek.ir

Battery Sensor

Remove

1. Disconnect the battery negative cable.

☞ **Battery Negative Cable - Remove**

2. Remove the strap of the battery sensor and disconnect the body harness connector.

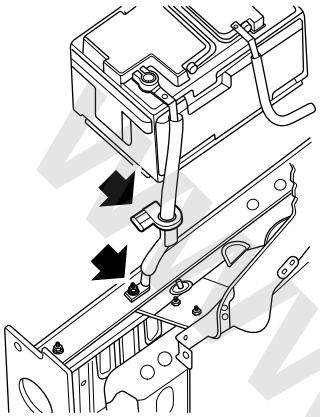

S8650004

3. Remove the battery sensor from the negative cable.

Refit

1. Fit the battery sensor into the negative cable properly, secure with tapes first, and then secure with straps.
2. Connect the connector of the body harness.
3. Connect the battery negative cable.

☞ **Battery Negative Cable - Refit**

www.cargeek.ir

www.cargeek.ir

Special Tools

Tool Number	Description	Picture
TEN00119	Accessory belt remove tool	TEN00119

www.cargeek.ir

www.cargeek.ir

Engine Electrical System-1.5T

Specifications

Torque

Description	Value
Bolt-Alternator to fix bracket	19–25Nm
Nut-power line to Alternator	11–15Nm
Bolt - Starter motor	40–50Nm
Nut- Starter motor	40–50Nm
Nut-power line to Starter	11–15Nm
Bolt-tensioner to engine	49–67Nm
Bolt - Battery Negative Lead to Left Front Carling	7–10Nm
Nut - Battery Top Fusebox to Engine Compartment Fusebox	5–7Nm
Nut - Battery Positive Cable to Battery Top Fusebox	5–7Nm
Nut- Battery lead to starter motor	11–13Nm
Nut - nut to battery clip	3–5Nm

www.cargeek.ir

www.cargeek.ir

Description and Operation

System Layout

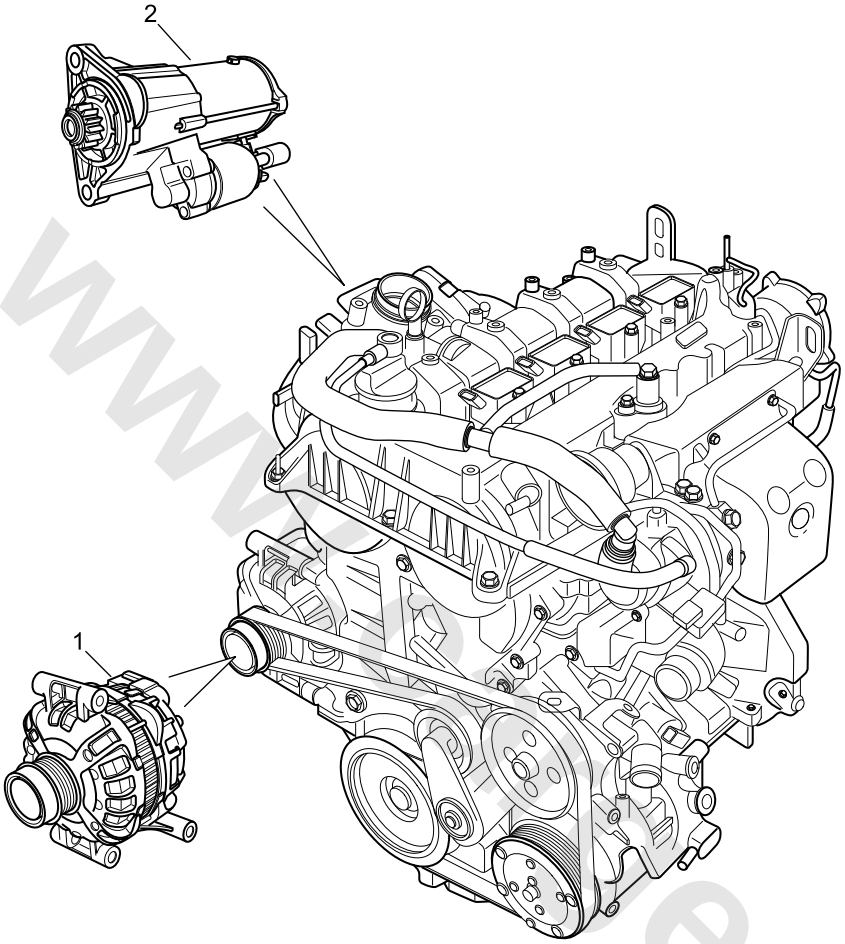

S1120502

1. Generator
2. Starter

www.cargeek.ir

Description

Overview

The starting system of the vehicle includes a 12V starter motor. This starter motor drives the engine to start combustion process and convert electrical energy to mechanical energy. The electric power system of the vehicle must be able to provide sufficient energy to ensure the starter motor can rotate the crankshaft.

The charging system consists of battery, generator and related electrical elements.

The battery provides the energy for engine crankshaft rotation and initial ignition. When the electrical demand exceeds the generator output, the battery can provide energy for a certain period of time. When generator voltage fluctuates, the battery has the function of voltage stabilization.

The alternator obtains mechanical energy from the crankshaft during engine running and transforms it into electric energy for operation of electrical elements of the vehicle and battery charging. A charging indicator is installed on the instrument pack. It will be illuminated without output voltage from the alternator or with voltage lower than the battery voltage.

Battery

Battery Instruction

All vehicles have a 12V maintenance-free lead-acid battery equipped at the left side of the engine compartment, which is refitted on the pressed steel bracket fixed on the transmission suspension, fastened by the battery retaining strap, and covered by the battery heat shield. The battery electrodes are a chuck-connected pole type.

Warning: Battery fluid (electrolyte) contains sulphuric acid. It may cause severe burns if it gets on your skin or in your eyes. Wear protective clothing and a face shield. If electrolyte gets on your skin or clothes, immediately rinse it off with water. If electrolyte gets in your eyes, immediately flush eyes with water for at least 15 minutes and seek medical help.

The battery in the electrical system has three main features. Firstly, the battery provides power for starting the engine. Secondly, the battery is used as the voltage adjuster of the electrical system. Lastly, the battery can provide energy in a certain amount of time when the electrical demand exceeds the engine output.

Compared with the conventional battery, the packaging battery has following advantages:

- There is no need to add water during the entire life cycle of the battery.
- It adopts the overcharge protective measures. If the voltage applied to the battery is too high, it will not receive the excess current as the conventional battery will. For the conventional battery, if the battery continues to be charged when the voltage is too high, air leakage will occur, causing fluid loss.
- Compared with the conventional battery, self discharge does not tend to occur for this kind of battery. This is especially important when the battery is not used for a long time.
- For the cigar lighter and smaller electrical equipment, the electric quantity supplied is more reliable.

For different battery types equipped, on the top of some batteries there is a battery condition indicator. Examine the indicator periodically to check the battery's condition. When the indicator shows:

- GREEN - the battery is in a good state of charge.
- DARK (turning to black) - the battery needs charging.
- CLEAR (or light yellow) - the battery must be replaced.

Battery Charging

When the engine is not running, by the reasons of electric equipments opening for long time, vehicle creepage and longtime parking, or some malfunction in the alternator, the battery might not be charged and will be flat, the vehicle even not can be started. On this condition, the battery need to be charged.

Caution: When charging or Emergency Starting, the negative cable should be connected to the body earth well, while not the negative pole.

Battery Appearance checking Before Charging:

- If the shell is broken or there is a leak, DO NOT charge the battery and replace it after finding the reason.
- If the pole is broken, DO NOT charge the battery and replace it after finding the reason.
- The bulge battery for over discharging or over charging, CAN NOT be charged. The battery should be replaced.
- Before charging, clean the poles, rub off rust. And smear some butter to avoid electricity corroding.

Charging Announcements:

- PLEASE pull on the security glass.
- Keep ventilation and normal temperature when charging.
- DO NOT smoke when charging, and avoid kindling in.
- After charging, connect the positive cable at first. Before charging, disconnect the negative cable at first.

Battery Charging Operation:

- Connect two positive poles between charger and battery, and connect two negative poles between charger and battery as well. If the battery is not removed from the

www.cargeek.ir

vehicle, PLEASE connect the negative cable form charger negative pole to the body earth well.

- Ensure the poles are clean, and the charging circuit loop is all right.
- For the type of flooded battery, we suggest charge isobarically with the limited voltage at 16.0±0.1V and the limited current at 2A. When it show that the current value is lass than 2A, it means the battery is brimming.
- During charging process, if the battery temperature is higher than 40°C, MUST stop charging, and after he battery temperature falling to environment temperature, the battery can be charged again.
- DO NOT charge the battery under 0°C.

For the **AGM** battery whose voltage value is under 11.0V, at the first of charging it may appear the phenomena that the battery is cannot be charged. Because badly discharging, the inverse proportion of vitriol in battery is too small, the liquid is close to pure water, battery's inner resistance value is too high. With the charging going on, the inverse proportion of vitriol in battery will rise up, the charging process could become breath again.

Battery Measure

Battery can be measured by familiar equipment on the after sales market, such as Midtronics series instruments. If the equipment is not type-suited, the measured data can not be used to judge the battery's status.

Battery Replacement

Caution: When removing the battery, ensure that the alarm is disarmed and that the ignition is switched off. Always disconnect the negative terminal first and then the positive terminal. When refitting the battery, always fit the positive terminal first followed by the negative terminal.

Refer to the chapter "Battery-remove/refit" when replacing the battery.

www.cargeek.ir

www.cargeek.ir

Service Procedures

Alternator

Remove

1. Disconnect the battery negative.
2. Remove the auxiliary drive belt.

Auxiliary Drive Belt Remove

3. Disconnect the alternator harness connector.
4. Remove 1 nut fixing the power cord to the alternator, and remove the power cord.

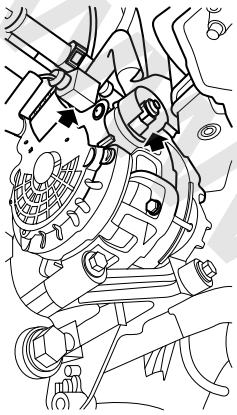

S1123515

5. Remove 3 bolts fixing the alternator to the alternator mounting bracket.

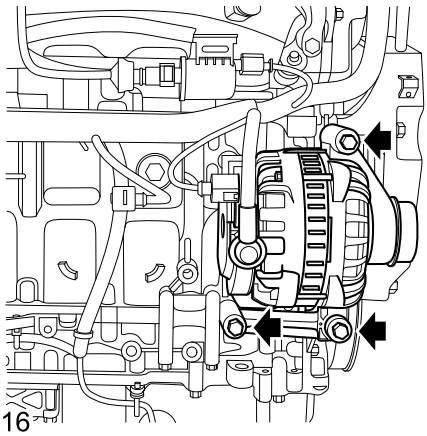

S1123516

6. Remove the alternator.

Refit

1. Fix the generator to the mounting bracket, fit 3 bolts, tighten to **19–25Nm**, and check the torque.
2. Connect the power cord to the generator, fit 1 nut, tighten to **11–15Nm**, and check the torque.
3. Connect the harness connector from the alternator to the engine.
4. Fit the auxiliary drive belt.

Auxiliary Drive Belt Refit

5. Connect the battery negative.

Starter Motor

Remove

1. Disconnect the battery negative.
2. Remove the bottom deflector.

Bottom Deflector Remove

3. Disconnect the harness connector of the starter solenoid.
4. Remove 1 nut fixing the battery wire to the starter, and disconnect the battery wire.

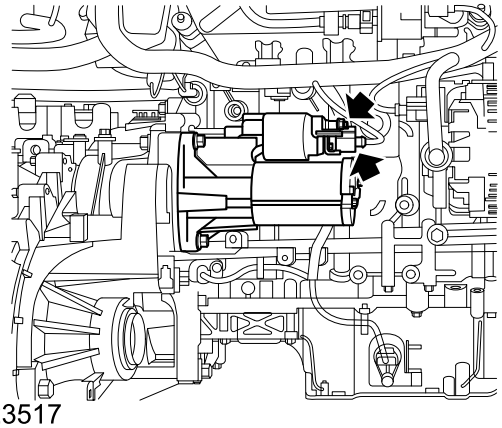

S1123517

5. Remove 1 bolt and 1 nut fixing the starter to the cylinder block.

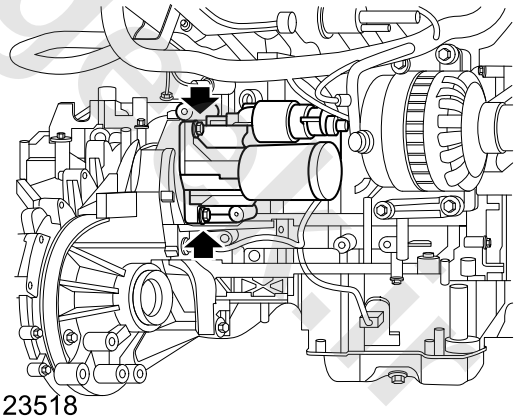

S1123518

6. Remove the starter.

Refit

1. Fix the starter to the engine cylinder block, fit 1 bolt, tighten to **40–50Nm**, check the torque, fit 1 nut and then tighten it to **40–50Nm**.
2. Connect the battery wire to the starter, fit 1 nut, tighten to **11–15Nm**, and check the torque.
3. Connect the motor connector.
4. Fit the bottom deflector.

Bottom Deflector Refit

5. Connect the battery negative cable.

www.cargeek.ir

Auxiliary Drive Belt

Remove

1. Disconnect the battery negative.
2. Remove the bottom deflector.

Bottom Deflector Remove

3. Insert the installer into the square hole in the tensioner, pull the torque wrench counterclockwise to disengage the tensioner from the belt.

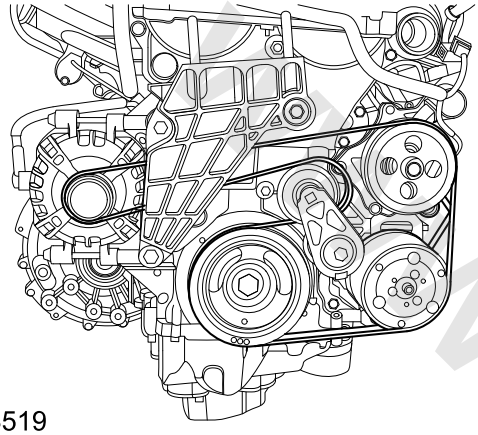

S1123519

4. Take out the belt.
5. Allow the tensioner return slowly, and take out the tool.

Refit

1. Insert the installer into the square hole in the tensioner, and counterclockwise pull the torque wrench.
2. Fit the auxiliary drive belt into each pulley groove and onto the tension pulley.
3. Release the tensioner slowly, make sure the pulley shall be basically located in the centre of each pulley after refit, and a 2mm margin shall be kept on both sides of the tension pulley.
4. Fit the bottom deflector.

Bottom Deflector Refit

5. Connect the battery negative.

Auxiliary Drive Belt Tensioner

Remove

1. Remove the auxiliary drive belt.

Auxiliary Drive Belt Remove

2. Remove 1 bolt fixing the auxiliary belt tensioner to the engine hood.

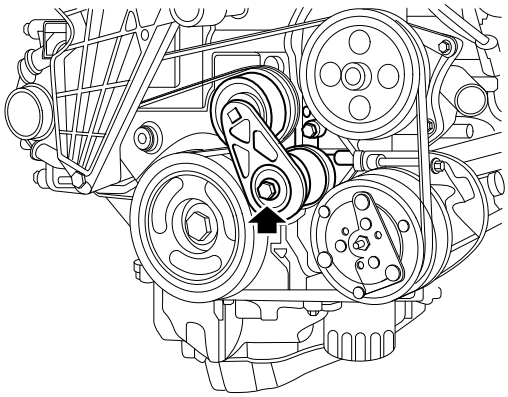

S1123520

3. Remove the auxiliary belt tensioner.

Refit

1. Fix the auxiliary belt tensioner to the front engine hood, fit 1 bolt, and tighten to **49–67Nm**.
2. Fit the auxiliary belt.

Auxiliary Drive Belt Refit

Engine Accessory Belt Abnormal Noise Diagnosis

Diagnostic Aids

- Due to moisture on the drive belt or pulley, chirp or squeal noise may be made intermittently. It may be necessary to spray a small amount of water on the drive belt to reproduce the failure mentioned by the customer. If this symptom is reproduced on the drive belt after water spraying, this problem can be solved by cleaning the belt.
- If the noise is intermittent, it may be verified by changing the load of accessory transmission components to ensure its maximum efficacy. It is recommended to check the following components: Overloaded air conditioning system, power steering system with clamping hose or improper oil, or malfunctioning alternator.
- Looseness or improper fit of body or suspension components may cause chirp, squeal, or whine. Other components of vehicle can also cause noise.
- The drive belt won't whine.

Test Description

The following numbers represents the step numbers in the diagnostic table.

www.cargeek.ir

2.The noise may have nothing to do with the engine. This step intends to verify whether the engine makes a noise. If the engine did not make a noise, this table is not further executed.

3.The noise may be the internal engine noise. Remove one drive belt at a time, then operate the engine in a short time to verify if the noise is associated with the drive belt. When removing the drive belt, the water pump may not be capable of operating normally and the engine may be overheated. After the drive belt is removed, DTC may be set during engine operation.

4. Check whether there are pillings on all drive pulleys. Pillings refer to the small balls, pellets or line strings formed in the drive belt slot by accumulation of rubber foam.

6.Pulley misalignment may be caused by improper fixing of accessory drive components, improper fit of accessory drive component pulley, or inward or outward bending of pulley after repair. Test the misaligned pulley with a straight ruler in a pulley groove passing through two or three pulleys. In case of pulley misalignment, refer to "Accessory Drive Components" for correct fit procedures of the corresponding pulley.

10. Check the fastener to eliminate the possibility of fit of incorrect bolts, nuts, gaskets or washers.

12.Check of the pulley for bending shall include: check the pulley for dent or other damages, so that when used to drive the pulley on its back, the drive belt cannot be correctly located in all the pulley grooves or on the smooth surface of pulley.

14.This test intends verify whether the drive belt tensioner is normally running. If the drive belt tensioner cannot run normally, the correct belt tension for preventing drive belt slippage is beyond the reach, leading to squeal.

15.This test intends to verify that the drive belt length is moderate to ensure the normal operation of the drive belt tensioner. In addition, if the fitted drive belt length is incorrect, there is no correct wiring, and the accessory drive components will be rotated in the wrong direction.

16.Pulley misalignment may be caused by improper fixing of accessory drive components, improper fit of accessory drive component pulley, or inward or outward bending of pulley after repair. Test the misaligned pulley with a straight ruler in a pulley groove passing through two or three pulleys. In case of pulley misalignment, refer to "Accessory Drive Components" for correct fit procedures of the corresponding pulley.

17.This test intends to verify whether the diameter or width of the pulley is correct. Compare the sizes of the pulleys by using a known good vehicle.

19.If the drive belt is not damaged or slightly pills, perform temporary repairs simply by replacing the drive belt.

Drive Belt Chirp, Squeal and Whine Diagnosis

www.cargeek.ir

www.cargeek.ir

Step	Operation	Yes	No
Definition: The following shows that the drive belt chirps: • The drive belt or pulley makes a sharp noise for each revolution. • Chirp may occur in a cold, wet start, and will disappear once the vehicle reaches the normal operating temperature. Definition: The following shows that the drive belt squeals: • A loud, harsh noise is produced due to drive belt slippage. This is very rare in a drive belt containing multiple ribs. • When the drive belt receives heavy load, for example, the air conditioning compressor engages and closes the throttle, or sliding on a stuck pulley or malfunctioning accessory drive component, noise is generated. Definition: The following shows that the drive belt whines: • High-frequency continuous noise. • The noise may be caused by malfunctioning of the accessory drive component bearing.			
1	Did you review the Drive Belt Symptom operation and perform the necessary inspections?	Go to Step 2	☞Symptoms - Engine Mechanical
2	Confirm that there is a chirp, squeal or whine noise. Does engine generate chirp, squeal or whine?	Go to step 3	Go to "Diagnostic Aids"
3	1. Remove the drive belt. If the engine has more than one drive belt, one drive belt is removed at one time and the following tests shall be implemented when a drive belt is removed at each time. 2. Make the engine operate for no more than 30-40s. 3. Remove the rest of belts to repeat this test when necessary. Does chirp, squeal or whine still exist?	☞Symptoms - Engine Mechanical	Go to Step 4
4	If chirp is diagnosed, check for serious pilling exceeding 1/3 belt groove depth. If there is scream or whine, go to Step 13. Is there any pilling on the belt slot?	Go to Step 5	Go to Step 6
5	Use an appropriate wire brush to clean the drive pulley. Is the repair completed?	Go to Step 20	Go to Step 6
6	Check whether the pulley is misaligned. Is the pulley misaligned?	Go to Step 7	Go to Step 8
7	Replace or repair the pulley misaligned. Is the repair completed?	Go to Step 20	Go to Step 8
8	Check if the bracket is bent or cracked. Is the bracket bent or cracked?	Go to Step 9	Go to Step 10
9	Replace the bracket bent or cracked. Is the repair completed?	Go to Step 20	Go to Step 10
10	Check for improper, loose or missing fasteners. Is there any failure found?	Go to Step 11	Go to Step 12

www.cargeek.ir

Step	Operation	Yes	No
11	1. Tighten the loose fastener. 2. Replace incorrect or missing fasteners. Is the repair completed?	Go to Step 20	Go to Step 12
12	Check whether the pulley is bent. Is there any failure found?	Go to Step 18	Go to Step 19
13	Check whether the accessory drive component bearing is stuck or the accessory drive component is faulty. If there is whine and the failure still exists, go to "Diagnostic Aids". Did you find and correct the failure?	Go to Step 20	Go to Step 14
14	Test if the drive belt tensioner is working properly. ☞**Drive Belt Tensioner Diagnosis** Did you find and correct the failure?	Go to Step 20	Go to Step 15
15	Check whether the drive belt length is correct. Did you find and correct the failure?	Go to Step 20	Go to Step 16
16	Check whether the pulley is misaligned. Did you find and correct the failure?	Go to Step 20	Go to Step 17
17	Check whether the pulley size is correct. Did you find and correct the failure?	Go to Step 20	Go to "Diagnostic Aids"
18	Replace the bent pulley. Is the repair completed?	Go to Step 20	Go to Step 19
19	Replace the drive belt. ☞**Drive Belt Replacement** Is the repair completed?	Go to Step 20	Go to "Diagnostic Aids"
20	Operate the system to verify the repair. Did you correct the condition?	System OK	Go to Step 3

www.cargeek.ir

Engine Accessory Belt Vibration Diagnosis

Diagnostic Aid

- Accessory transmission components may affect engine vibration.The vibration in engine operation may cause body components or other parts of vehicle to boom.The vibration may be caused by, but not limited to:air conditioning system overfilled,generator overloaded.To change the load of accessory transmission components will be help to identify intermittent failure or abnormal conditions.
- Drive belt may have a boom failure that cannot be heard or felt.Sometimes replacement of the drive belt may be the only repair method for this symptom.
- If you have replaced the drive belt and completed the diagnosis table and this noise appears only after drive belt is fitted,a failure may be found in a certain accessory transmission component.To change the loads of different accessory transmission components may help to find out which component has caused the boom.

Test Description

The following serial numbers correspond to the step numbers listed in the diagnostic table.

2.The purpose of this test is to confirm that symptoms has occurred in the diagnosis process.Other vehicle components may also cause similar symptoms.

3.The purpose of this test is to check and confirm a certain drive belt has caused boom or vibration.Due to the similarity in related instructions,boom and internal engine noise may be confused.If the vehicle has more than one drive belts,remove only one drive belt at a time.With the drive belt removed, the water pump might not operate, and the engine may be overheated.When the engine runs after the drive belt is removed,DTC may be set.

4.Check the drive belt to confirm that the noise is not caused by the drive belt.Small cracks between edges of the drive belt will not cause this noise.Belt delamination fault is identified through separated belt layers which can be seen on the edge of belt,and the belt is touched rough and uneven.

5.A small amount of pilling is abnormal and acceptable.For serious pilling,the drive belt will lose the smooth surface for normal operation.

9.Fastener check can eliminate the possibility of fit error in bolt,nut,space ring or washer.

11.This step is executed only when the water pump is driven by the drive belt.Check the water pump shaft for bending.Check the water pump bearing for smooth operation and too large clearance.Compare the water pump with a known water pump in good condition.

12.Bent,cracked or loose bracket of accessory transmission component may apply additional tension force to the accessory component,which leads to its vibration.

Step	Operation	Yes	No
Caution: Refer " Note about belt oil". Definition:the following conditions are symptoms of drive belt boom: • Low frequency beat,knock or bang is heard at the idler or right above it. • You can hear the noise mentioned above for every turn of drive belt or pulley rotation. • Boom may be due to: – Pilling,rubber dust deposition form balls or small strips in the drive pulley groove – Drive belt delamination – Drive belt damage Definition:the following conditions are symptoms of drive belt vibration: • Vibration related to engine speed. • Vibration may be responsive to the load of accessories.			
1	Whether the operations in "Drive Belt Symptoms" have been consulted and whether necessary check has been implemented?	Go to Step 2	☞Symptoms – Engine Mechanical System
2	Check and confirm that the boom or vibration is associated with the engine. Does the engine generate boom or vibration?	Go to step 3	Go to "Diagnostic Aid"

www.cargeek.ir

Step	Operation	Yes	No
3	1. Remove the drive belt. If the engine has more than one drive belts,remove one drive belt at one time and carry out the following tests when removing a drive belt each time. 2. Make the engine operate for no more than 30-40s. 3. Remove the rest of belts to repeat this test when necessary. Does the boom or vibration still exist?	☞**Symptoms – Engine Mechanical System**	Go to step 4
4	Check the drive belt for any worn, damaged, delaminated part or partially missing belt rib and debris. Is any of the above failures detected?	Go to step 7	Go to step 5
5	Check for serious pilling exceeding 1/3 depth of drive pulley groove. Is serious pilling detected?	Go to Step 6	Go to Step 7
6	1. Use an appropriate wire brush to clean the drive pulley. 2. Refit the drive belt. ☞**Drive Belt Replacement** Is the failure removed?	Go to step 8	Go to step 7
7	Fit a new drive belt. ☞**Drive Belt Replacement** Is the replacement completed?	Go to step 8	Go to step 9
8	Run the system and verify the repair effects. Is the failure removed?	System OK	Go to step 9
9	Check if the fastener is incorrect, loose or missing. Is any of the above failures detected?	Go to step 10	Go to step 11
10	1. Tighten the loose fastener. ***Caution: Refer "Instruction about fastener".*** 2. Replace incorrect or missing fasteners. Is the repair completed?	Go to step 13	Go to step 11
11	Check whether the water pump shaft is bent. Did you find and remove the failure?	Go to step 13	Go to step 12
12	Check if the bracket is bent or cracked. Did you find and remove the failure?	Go to step 13	Go to "Diagnostic Aid"
13	Run the system and inspect the repair effects. Is the failure removed?	System OK	Go to Step 3

www.cargeek.ir

www.cargeek.ir

Accessory Belt Failure Diagnosis

Diagnosis Aid

- If the drive belt falls off from the drive pulley repeatedly, the pulley is misaligned.
- The drive belt may fall off from the pulley if you quickly apply and release additional load through the accessory drive components.Confirm that the accessory drive component operates normally.
- If the drive belt is incorrect in length,the drive belt tensioner will not be able to keep the drive belt in an appropriate tension.
- Excessive wear in drive belt is usually caused by improper fit or use of the wrong belt.
- Slight position shift of the drive pulley will not result in excessive wear, but may cause the drive belt to make a noise or fall off.
- Serious misalignment of the drive pulley may result in excessive wear and fall of the drive belt.

Test Description

The following serial numbers correspond to the step numbers listed in the diagnostic table.

2.The purpose of this check is to inspect the condition of the drive belt.Drive belt falling off may damage the drive belt.The drive belt may be damaged,leading to drive belt falling off.Check the belt for notch, tear, partial missing of belt edge or belt layer damage.

4.If the accessory drive component and accessory drive component pulley are improperly fitted, or the pulley curves inward or outward during the past repairs, the pulley will be misaligned.Place a ruler in the pulley groove and place it over two or three pulleys, then check if there is any pulley misaligned.In case of pulley misalignment, refer to "Accessory Drive Components" for correct fit procedures of the pulley.

5.When driving the pulleys with the belt back,check the pulleys for bending,which shall include check the pulleys for indentation and other damages that may obstruct the drive belt to be properly seated in all pulley grooves or smooth pulley surface.

6.Accessory transmission component bracket bending or cracking will cause the drive belt to fall off.

7.Fastener check can eliminate the possibility of fit error in bolt, nut, space ring or washer.Missing,loose or incorrect fasteners may make the loaded pulley shift from the bracket.Excessive fastening of fasteners may cause accessory component bracket to shift from original position.

13.The purpose of this check is to check and confirm that the drive belts are fitted correctly to all drive pulleys.Drive belt wear may be caused by drive belt misalignment due to one pulley groove.

14. If the fitted drive belt is too wide or too narrow,the drive belt may be worn.The drive belt ribs shall match with all the pulley slots.

15.The purpose of this check is to confirm that the drive belt is not in contact with the engine parts or body parts during engine operation.When the load of drive belt accessory transmission component changes, there shall be enough clearance.When the throttle is quickly opened, the drive belt shall not be in contact with the engine or body parts.

Step	Operation	Yes	No
Caution: Refer " Note about belt oil". Definition:The drive belt falls off from the pulley or cannot be correctly sleeved to the pulley. Definition:Outside edge of drive belt is worn due to incorrect fit of the drive belt.			
1	Whether the operations in "Drive Belt Symptoms" have been consulted and whether necessary check has been implemented?	Go to Step 2	☞**Symptoms - Engine Mechanical System**
2	If it is diagnosed as excessive wear, go to step 13. If the drive belt is diagnosed as falling off,check the drive belt for damage. Is there any failure?	Go to step 3	Go to step 4
3	Fit a new drive belt. ☞**Drive Belt Replacement** Does the drive belt still fall off?	Go to step 4	System OK
4	Check whether the pulley is misaligned. Do you find and resolve the failure?	Go to step 12	Go to step 5

www.cargeek.ir

Step	Operation	Yes	No
5	Check whether the pulley is bent or depressed. Do you find and resolve the failure?	Go to step 12	Go to step 6
6	Check if the bracket is bent or cracked. Do you find and resolve the failure?	Go to step 12	Go to step 7
7	Check if the retainer is correct, loose or missing. Is there any loose or missing fastener?	Go to step 8	Go to step 9
8	1. Tighten the loose fastener. ***Caution: Refer "Instruction about fastener".*** 2. Replace incorrect or missing fasteners. Does the drive belt still fall off?	Go to step 9	System OK
9	Test to see if the drive belt tensioner is working properly. ☞**Drive Belt Tensioner Diagnosis** Does the drive belt tensioner operate normally?	Go to step 11	Go to step 10
10	Replace the drive belt tensioner. ☞**Drive Belt Tensioner Replacement** Does the drive belt still fall off?	Go to step 11	System OK
11	Check the drive belt idler and the drive belt tensioner pulley bearing for failure. Do you find and resolve the failure?	Go to step 12	Go to "Diagnostic Aid"
12	Operate the system and inspect the repair effect. Is the failure resolved?	System OK	Go to step 2
13	Check whether the drive belt is fitted correctly. ☞**Drive Belt Replacement** Do you find the failure?	Go to step 16	Go to step 14
14	Check whether the drive belt is correct. Do you find the failure?	Go to step 16	Go to step 15
15	Check the drive belt for friction with bracket,hose or harness. Do you find and resolve the failure?	Go to step 17	Go to "Diagnostic Aid"
16	Replace the drive belt. ☞**Drive Belt Replacement** Is the replacement completed?	Go to step 17	-
17	Run the system and verify the repair effects. Is the failure resolved?	System OK	-

Drive Belt Tensioner Diagnosis

1. Apply tension force to the belt tensioner along the arrow direction with the tool.

www.cargeek.ir

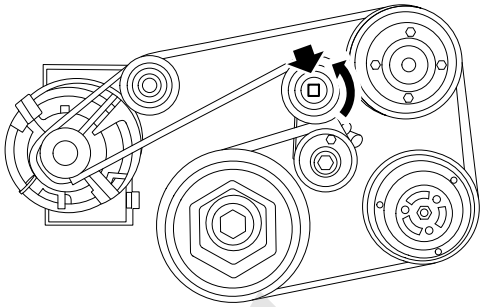

S1123521

2. The belt tensioner must return to the original position automatically, if not, replace the belt tensioner.

Auxiliary Drive Belt Tensioner Replacement

3. Remove the accessory belt.

Auxiliary Drive Belt Remove

4. Check the tensioner pulley for abnormal sound and looseness.
5. If any, replace the belt tensioner.

Auxiliary Drive Belt Tensioner Replacement

6. Fit the accessory belt.

Auxiliary Drive Belt Refit

Battery Negative Cable

Remove

1. Disconnect the negative battery cable.
2. Release the bolts fixing the battery negative cable to left front longitudinal member.

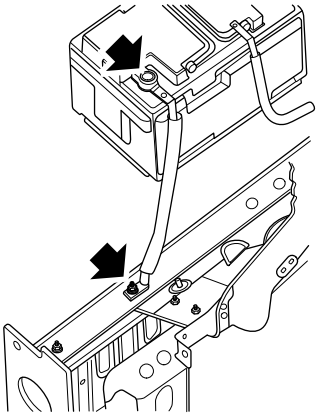

S8650005

3. Remove the battery negative cable.

Refit

1. Fit the battery negative cable to the engine compartment and ensure the orientation is right.
2. Fit the bolts fixing the battery negative cable to left front longitudinal member, and tighten to **7–10Nm**.
3. Connect the negative cable to the battery negative cable terminal.

www.cargeek.ir

Battery Positive Cable

Remove

1. Disconnect the battery negative cable.
2. Disconnect the battery positive cable. Release the nuts on the both ends of the positive transition cables and remove the transition cable, and then disconnect the nuts fixing the positive cable to the battery fuse box.

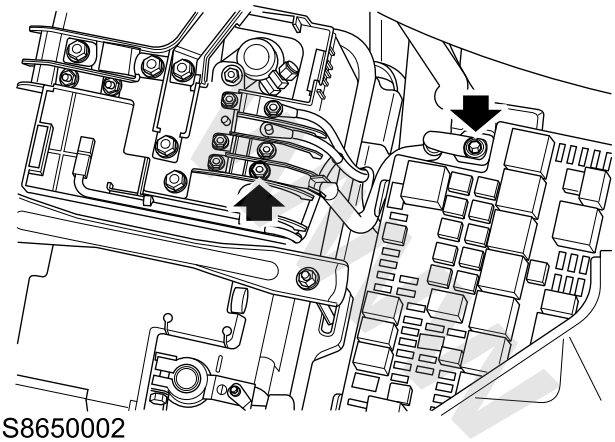

S8650002

3. Lift the vehicle to a proper height by a elevator.
4. Release the nuts fixing the battery cable to the engine and loosen the fixing-point on the gearbox.

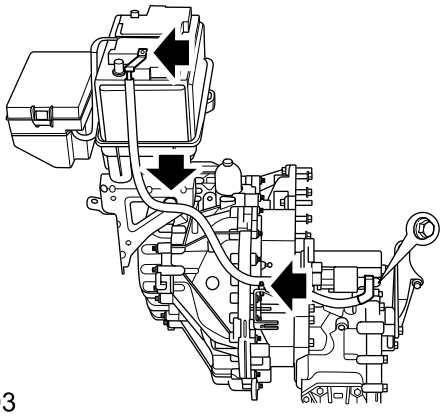

S8650003

5. Lower the vehicle.
6. Loosen the cable retaining clips and clips.
7. Remove the battery positive cable.

Refit

1. Fit the battery negative cable to the engine compartment and ensure the orientation is right.
2. Tighten the nut fixing the positive transition cable to the both ends of the fuse box to **5–7Nm**.
3. Tighten the nut fixing the positive cable to the battery fuse box to **5–7Nm**.
4. Close the fuse box cover.
5. Fix the cable retaining clips and clips securely.
6. Lift the vehicle to a proper height by a elevator.
7. Tighten the nut fixing the positive cable to the engine to **11–13Nm**.
8. Lower the vehicle.
9. Reconnect the battery cable terminal post and then connect the negative end.

www.cargeek.ir

www.cargeek.ir

Battery

Remove

1. Disconnect the battery cable first, and then disconnect the positive cable.
2. Remove the battery fuse box.

Battery Fuse Box – Remove

3. Release the bolt of battery layering and remove the layering.

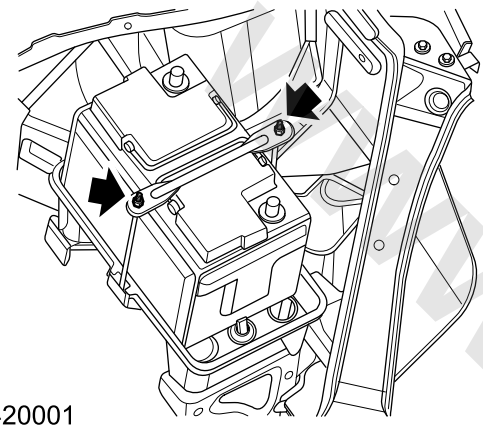

S8420001

4. Remove the battery cover.
5. Remove the battery from the battery tray.

Refit

1. Fit the battery to the battery tray properly.
2. Fit the battery cover.
3. Use mineral grease to clean the battery poles.
4. Fit the lock block. Firstly, pre—screw the nuts of the lock block to let the bolts come out the nuts about 11mm. Then tighten the nuts to **3–5Nm** severally and check the torques.

Warning: Keep the lock block at the horizontal when screwing.

5. Fit the battery top fuse box.

Battery Top Fuse Box Refit

6. Connect the battery cable, positive cable at first, then connect the negative one.

www.cargeek.ir

www.cargeek.ir

Special Tools

www.cargeek.ir

www.cargeek.ir

Engine Manifold & Exhaust System-2.0T

Specifications

Torque

Description	Value
Bolt -Throttle body to inlet manifoldy	9Nm
Screw - air cleaner upper cap to air cleaner base	1.4–1.8Nm
Nut -Front pipe to Silencer	55–65Nm
Bolt -DPF to Turbo charge	55–65Nm
Nut -Front pipe to DPF	55–65Nm
Bolt -DPF bracket to engine	26–34Nm
Bolt -DPF to DPF bracket	26–34Nm
Bolt -turbocharger heat shield to turbocharger	22–28Nm
Bolt-Front pipe frame to engine oil pan	19–25Nm
Bolt -rear silencer Heat shield to body	4–6Nm
Nut -heat shield to body	4–6Nm
Bolt -heat shield to body	4–6Nm

www.cargeek.ir

www.cargeek.ir

Description and Operation

System Layout

Intake System Exploded View

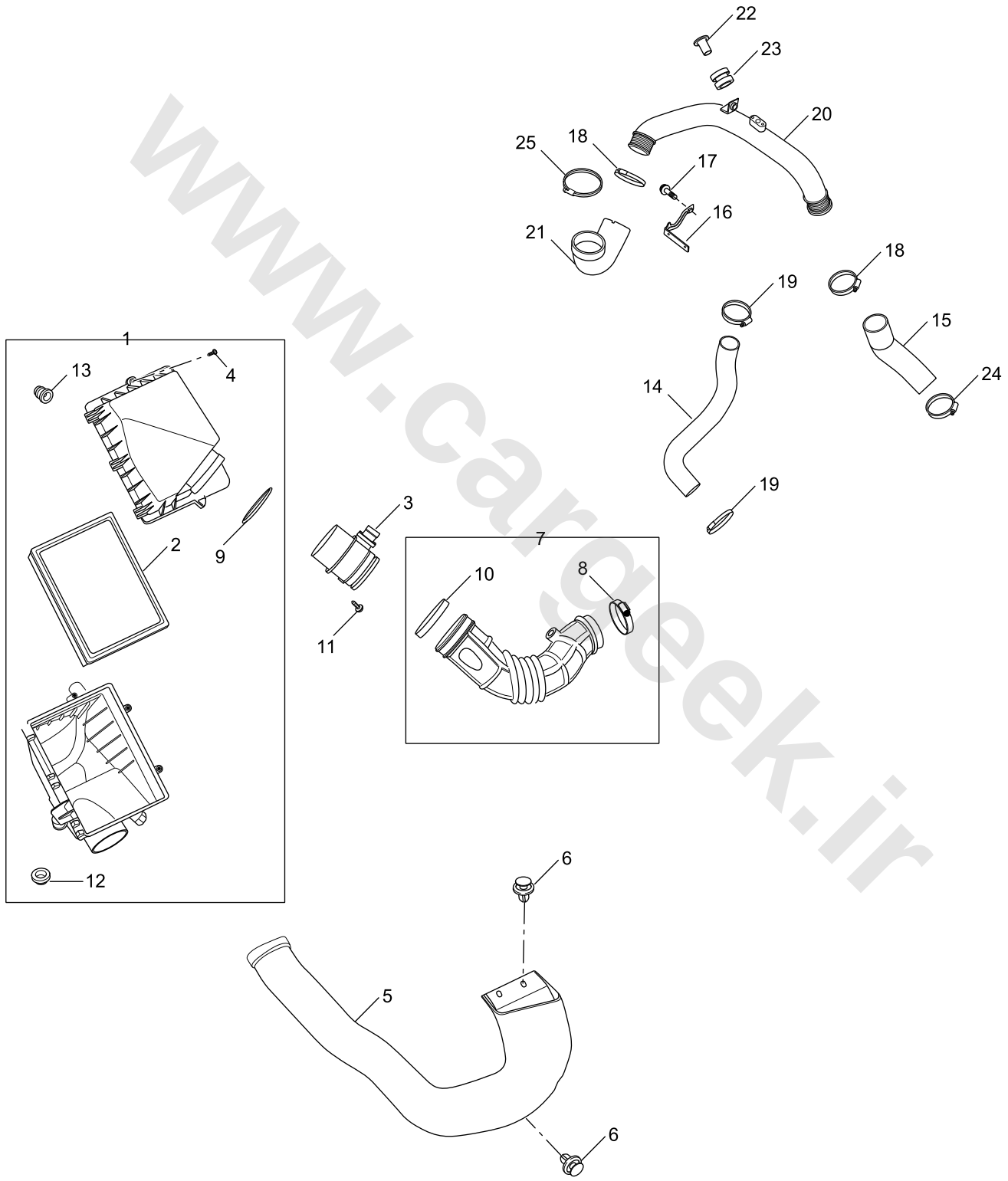

S9110105

1. Air Filter Assembly
2. Filter Element

www.cargeek.ir

www.cargeek.ir

3. Air Flow Meter
4. Bolt - Air Filter
5. Air Inlet Assembly
6. Split Pin - Air Filter Inlet Pipe
7. Hose - Air Filter to Booster
8. Clamp - Air Filter Outlet Pipe to Booster
9. O Ring - Air Flow Meter
10. Clamp - Air Filter Outlet Pipe to Air Flow Meter
11. Screw - Air Flow Meter
12. Air Filter Ring
13. Air Filter Ring
14. Hose - Booster to Intercooler
15. Pipe Assembly - Intercooler to Engine
16. Bracket - Intercooler to Engine Pipe
17. Bolt - Intercooler Outlet Pipe
18. Clamp - Intercooler to Engine Pipe
19. Clamp - Booster Hose to Intercooler
20. Pipe Assembly - Intercooler to Engine
21. Pipe Assembly - Intercooler to Engine
22. Bolt - Intercooler Outlet Pipe
23. Ring - Intercooler Outlet Pipe
24. Clamp - Intercooler to Engine Pipe
25. Clamp - Intercooler to Engine Pipe

www.cargeek.ir

www.cargeek.ir

Exhaust System Exploded View

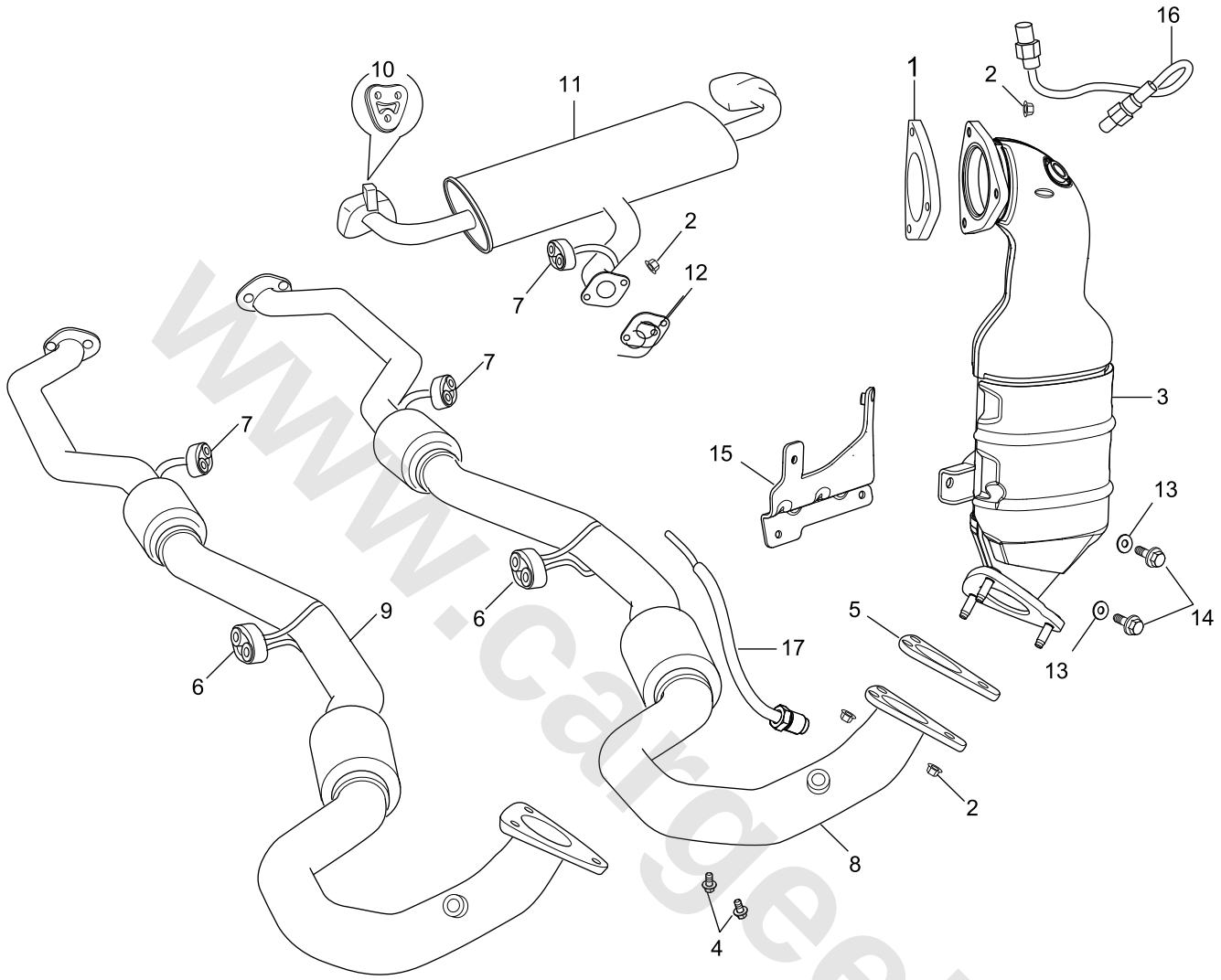

S9310105

1. Gasket - Front Exhaust Pipe
2. Nut - Catalytic Converter
3. Three-way Catalytic Converter Assembly
4. Bolt - Front Exhaust Pipe Bracket
5. Gasket - Front Exhaust Pipe
6. Front Exhaust Pipe Front Lug
7. Front Exhaust Pipe Rear Lug
8. Front Exhaust Pipe Assembly
9. Front Exhaust Pipe Assembly
10. Exhaust Muffler Lug
11. Rear Muffler Assembly
12. Gasket - Exhaust System
13. Gasket - Front Exhaust Pipe
14. Bolt - Catalytic Converter Bracket
15. Catalytic Converter Bracket
16. Front Oxygen Sensor
17. Rear Oxygen Sensor

www.cargeek.ir

Description

Air Filter

The hose between the air filter and the turbocharger, between the turbocharger compressor and the intercooler, and between the intercooler and the throttle body is secured by the worm drive clamp. The air filter assembly is fixed to the body by the air filter bracket assembly.

Exhaust System

The exhaust system consists of a three-way catalytic converter and a muffler. Adjacent pipelines are fixed together by welding bolts, gaskets and nuts. Five rubber lugs (the front two are made of silicone rubber) fix the exhaust system to the body, which can damp slight vibration of the exhaust system and decrease the vibration transferred to the body. The thermal baffle can effectively reduce the heat transferred from the exhaust pipe to the body, and the tail pipe applies the stainless steel design.

www.cargeek.ir

www.cargeek.ir

Operation

Air Filter

Air enters into the front engine compartment and the intake pipe at the rear of the front bumper, and the impurities in the air are filtered by the air filter element.

Air from the air filter is transferred to the turbocharger compressor by the hose between the air filter and the turbocharger, it is then delivered to the intercooler by the hose between the turbocharger and the intercooler. The cooled fresh air is transmitted to the throttle by the hose between the intercooler and the throttle.

Exhaust Manifold and Exhaust System

The exhaust manifold introduces the combusted gas mixture from the 4 engine cylinders into the turbocharger through its 4 passages, and the turbocharger turbine applies the gas mixture from the engine to drive the turbocharger compress to compress the inlet air. ACT can adjust the outlet air of the volute bleeder valve according to different working conditions. The ERCV can open the inlet/outlet return passage in the housing during braking and protect the turbocharger.

The exhaust from the engine enters into the exhaust system by the turbocharger, it first passes through the three-way catalytic converter before flowing into the muffler. The front muffler is of an absorption type, and a perforated pipe passes through the muffler, which minimizes the airflow limit. The rear muffler is a reflective muffler which uses the internal hindered sound wave reflection to reduce the noise level.

Three-Way Catalytic Converter (TWC)

Warning: TWCs operate at very high temperatures; therefore, extreme caution is necessary when handling this component.

Caution: For the TWC to work efficiently and to prevent premature failure do not run on leaded fuel and do not allow unburnt fuel to pass through the exhaust system.

The primary combustion happens in the combustion chamber and the exhaust gas enters into the **TWC** through the exhaust manifold. The **TWC** can operate effectively only if its minimum working temperature is achieved. The exhaust gas enters into an integral structure coated with Pt and Rh (catalyst), and two procedures (reduction and oxidation) are performed here. The nitrogen oxide (**NOx**) is restored to nitrogen, from which the oxide is combined with carbon monoxide (**CO**) to form carbon dioxide. The hydrocarbon (**HC**) and **CO** will continue to react in the three-way catalytic converter with the oxygen in the air, which forms water and **CO2**.

www.cargeek.ir

Service Procedures

Electronic Throttle Self-learning - UMC System

Self-learning

1. Confirm if the vehicle speed is 0 km/h and the engine speed is 0 r/min.
2. Connect the scan tool to the vehicle and access the **VDS**.
3. Select "Diagnosis — **ECM** — Real-time Display", ensure the battery voltage is above 10V, the accelerator pedal opening is 0, the coolant temperature is within 5°C ~ 100°C and the intake air temperature is higher than 5°C.
4. Check if the harness is properly connected and shows no other faults, mainly including throttle fault.
5. Place the ignition switch in "ON" position, wait for 30s, at this interval, do not do any other operations.
6. The self-learning is then completed.

Electronic Throttle - with Adjustment

Remove

1. Disconnect the battery negative.
2. Disconnect the connector of the throttle body.

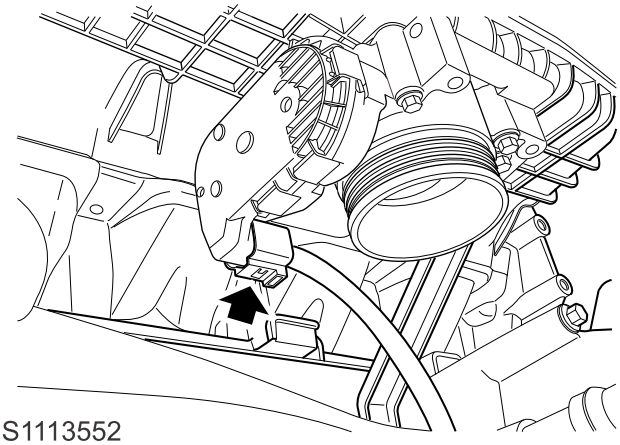

S1113552

3. Loosen the clamps and disconnect the throttle intake pipe from the throttle body.

Caution: Always fit plugs to open connections to prevent contamination.

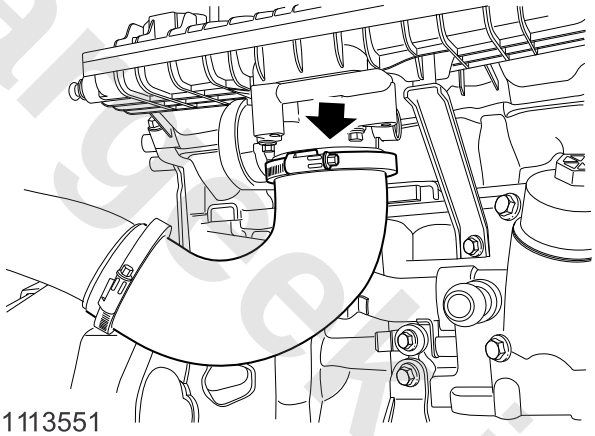

S1113551

4. Remove 4 bolts fixing the throttle body to the intake manifold.

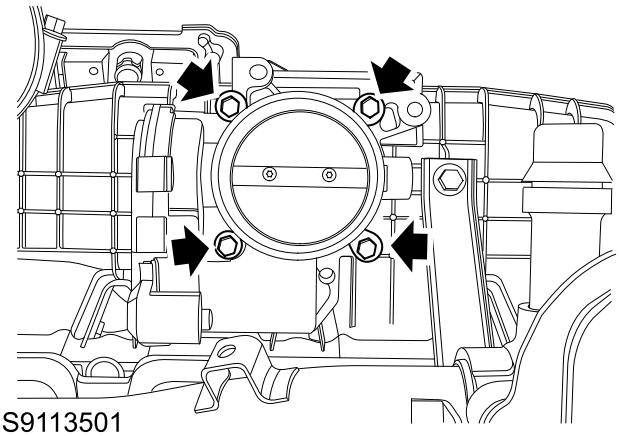

S9113501

5. Remove the throttle body and discard the O ring.

www.cargeek.ir

www.cargeek.ir

Refit

1. Clean the mating surface of the throttle body and intake manifold and ensure there is no foreign material.
2. Fit the O ring to the intake manifold.
3. Secure the throttle body on the intake manifold, fit 4 bolts, tighten to **9Nm** in diagonal sequence and check the torque.
4. Connect throttle intake pipe to the throttle body and secure with clamps.
5. Connect the connector of the throttle body.
6. Connect the battery negative.
7. Perform self-learning for the electronic throttle.

Electronic Throttle Self-learning

Air Filter Assembly

Remove

1. Disconnect the battery negative.
2. Remove the air filter element.

Air Filter Element Remove

3. Remove the air flow meter.

Air Flow Meter Remove

4. Disconnect the air filter inlet pipe and air filter assembly.

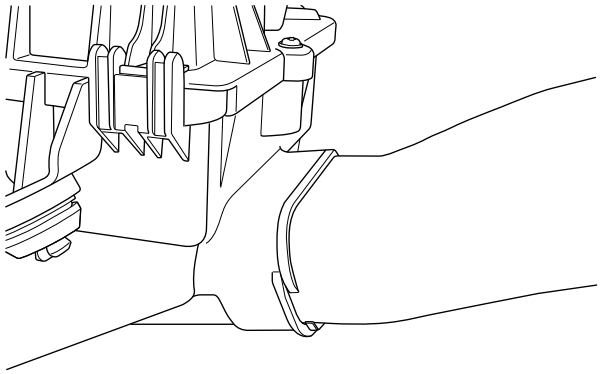

S9113503

5. Release the lower air filter housing from the two grommets and remove the air filter assembly.

Refit

1. Fix the lower air filter housing to the grommet.
2. Align the hole at the rear of the air filter inlet pipe with the block at the rear side (junction) of the air filter, align the mark and push to lock it.
3. Fit the air flow meter.

Air Flow Meter Refit

4. Remove the air filter element.

Air Filter Element Refit

5. Connect the battery negative.

www.cargeek.ir

Air Filter Element

Remove

1. Disconnect the battery negative.
2. Disconnect the connector (1) of the air flow meter.
3. Release the clamp and disconnect the turbocharger intake pipe and air flow meter (2).
4. Take away 4 screws (3) fixing the air filter cover.

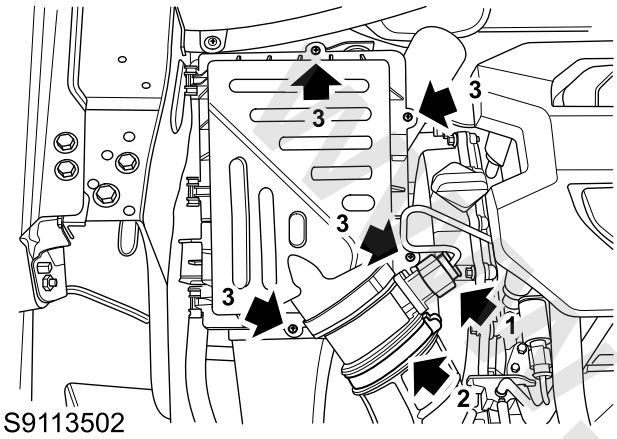

5. Release and open the cover to access the element of the air filter.
6. Remove the air filter element.

Refit

1. Clean the inside of the air filter.
2. Refit the air filter element.
3. Fix the cover of the air filter to the housing of the air filter, fit 4 screws, tighten to **1.4–1.8Nm**, and check the torque.
4. Fit the turbocharger air inlet hose to the air flow meter, and secure it with clamps.
5. Connect the connector of the air flow meter.
6. Connect the battery negative cable.

Rear Muffler Assembly

Remove

Warning: Exhaust components get extremely hot during operation. Ensure exhaust components are sufficiently cooled before handling.

1. Raise the vehicle on a lift.

Warning: Do not work on or under a vehicle supported only by a jack. Always support the vehicle on safety stands.

2. Remove 2 nuts fixing the rear muffler assembly to the front exhaust pipe and discard the flange gasket.

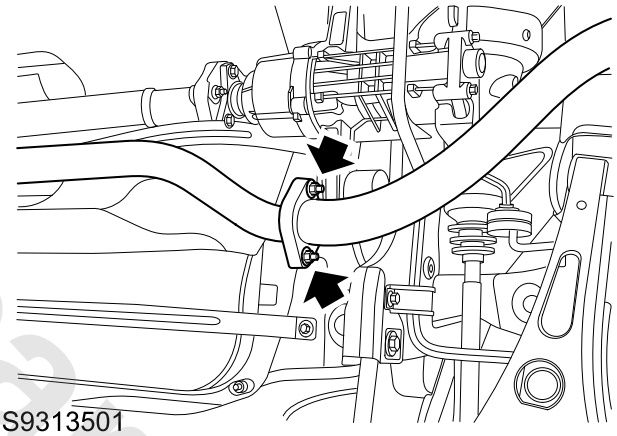

3. Remove 3 rubber lugs fixing the rear muffler assembly to the body.

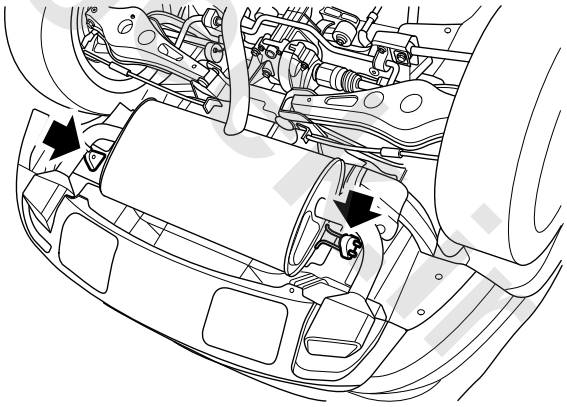

Refit

1. Hang the rear muffler assembly on the rubber lug.
2. Fix the rear muffler assembly to the front exhaust pipe, fit new flange gasket, tighten to **55–65Nm** and check the torque.
3. Lower the vehicle with the lift.

www.cargeek.ir

www.cargeek.ir

Catalytic Converter

Remove

1. Disconnect the battery negative.
2. Remove the front oxygen sensor.

☞ **Front Oxygen Sensor Remove**

3. Remove 3 bolts fixing the turbocharger heat shield to the turbocharger, and remove the turbocharger heat shield.

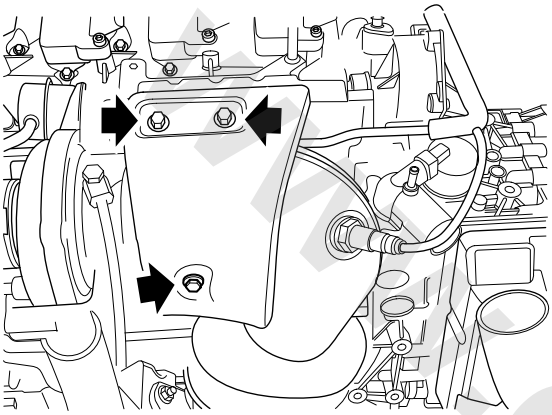

S1113578

4. Remove the bottom deflector.

☞ **Bottom Deflector Remove**

5. Remove 2 bolts (1) fixing the catalytic converter to 2 brackets of the catalytic converter.
6. Remove 2 bolts (2) fixing the two catalytic converter brackets to the engine and remove the brackets.

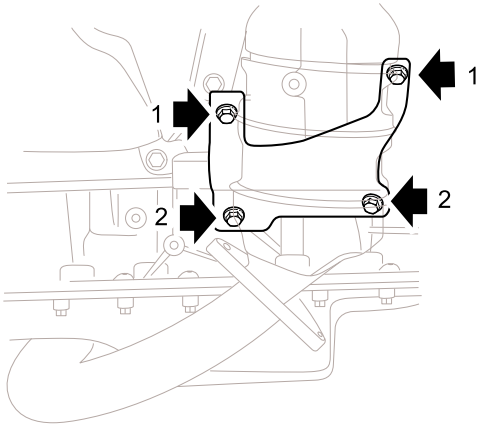

S9313511

7. Remove 3 nuts fixing the front exhaust pipe to the catalytic converter and discard the exhaust pipe gasket.

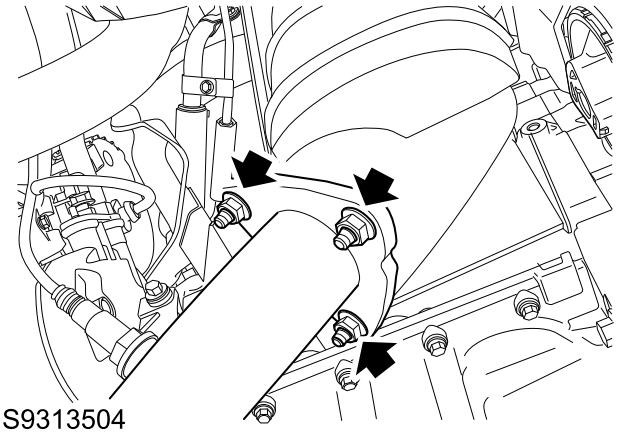

S9313504

8. Remove 3 nuts fixing the catalytic converter to the turbocharger.

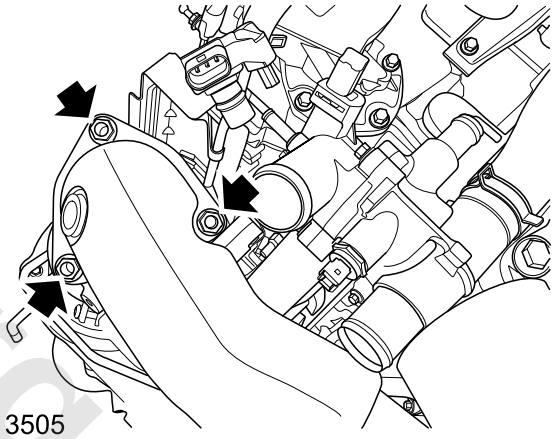

S9313505

9. Remove the catalytic converter and discard the gasket.

Refit

1. Fit a new gasket, fix the catalytic converter to the turbocharger, fit 3 bolts, tighten to **55–65Nm**, and check the torque.
2. Fit a new gasket, fix the front exhaust pipe to the catalytic converter, fit 3 bolts, tighten to **55–65Nm**, and check the torque.
3. Fix 2 brackets of the catalytic converter to the engine, fit the two bolts, tighten to **26–34Nm** and check the torque.
4. Fix the catalytic converter to 2 brackets of the catalytic converter, fit the two bolts, tighten to **26–34Nm** and check the torque.
5. Fit the bottom deflector.

☞ **Bottom Deflector Refit**

6. Fix the turbocharger heat shield to the turbocharger, fit 3 bolts, tighten to **22–28Nm**, and check the torque.
7. Fit the front oxygen sensor.

☞ **Front Oxygen Sensor Refit**

8. Connect the battery negative.

www.cargeek.ir

Front Exhaust Pipe

Remove

Warning: Exhaust components get extremely hot during operation. Ensure exhaust components are sufficiently cooled before handling.

1. Disconnect the battery negative.
2. Remove the rear oxygen sensor.

Rear Oxygen Sensor Remove

3. Remove 3 nuts securing the front exhaust pipe on the three-way catalytic converter and discard the flange gasket.

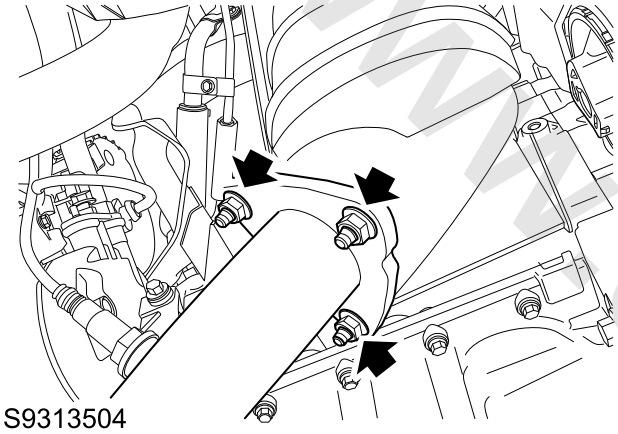
S9313504

4. Remove 2 nuts fixing the rear muffler to the front exhaust pipe and discard the flange gasket.

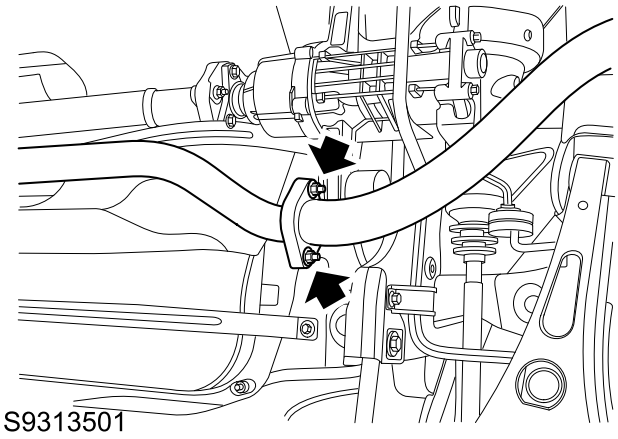
S9313501

5. Remove 2 bolts fixing the front exhaust pipe to the engine oil pan.

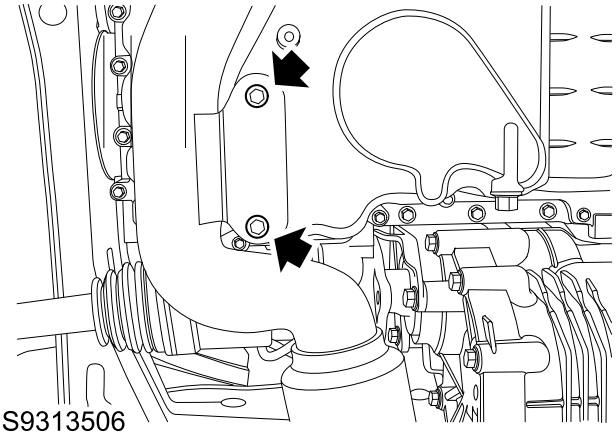
S9313506

6. Remove 2 rubber lugs securing the front exhaust pipe to the body.

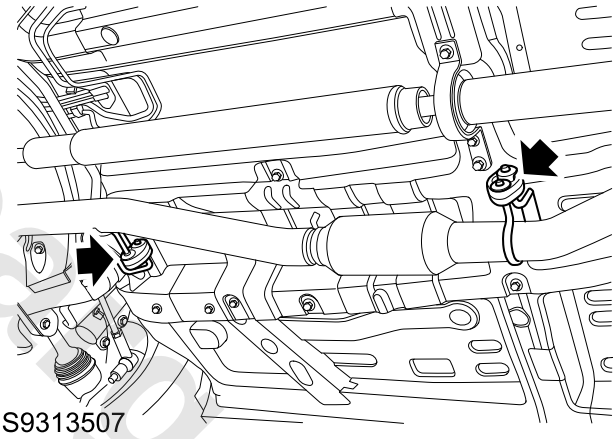
S9313507

Refit

1. Hang the front exhaust pipe over the rubber lug.
2. Fix the front exhaust pipe to engine oil pan, fit 2 bolts and tighten them to **19–25Nm**, then check the torque.
3. Securing the front exhaust pipe on the rear muffler, fit a new flange gasket and 2 nuts, tighten to **55–65Nm** and check the torque.
4. Securing the front exhaust pipe on the three-way catalytic converter, fit a new flange gasket and 3 nuts, tighten to **55–65Nm** and check the torque.
5. Fit the rear oxygen sensor.

Rear Oxygen Sensor Refit

6. Connect the battery negative.

www.cargeek.ir

Heat Shield - Rear Muffler

Remove

Warning: Exhaust components get extremely hot during operation. Ensure exhaust components are sufficiently cooled before handling.

1. Remove the rear muffler.

Rear Muffler Remove

2. Remove 6 nuts fixing the thermal baffle (rear muffler) to the body and remove the thermal baffle.

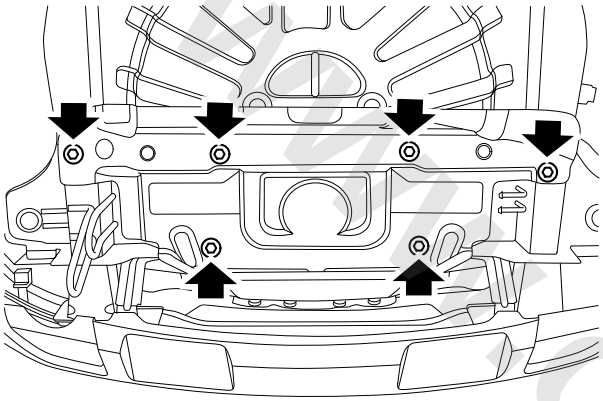

S9313509

Refit

1. Fix the heat shield (rear muffler) to the body, fit 6 bolts, tighten to **4–6Nm** and check the torque.
2. Fit the rear muffler.

Rear Muffler Refit

Heat Shield - Exhaust Passage

Remove

Warning: Exhaust components get extremely hot during operation. Ensure exhaust components are sufficiently cooled before handling.

1. Raise the vehicle on a lift.

Warning: Do not work on or under a vehicle supported only by a jack. Always support the vehicle on safety stands.

2. Remove 6 nuts and 1 bolt fixing the thermal baffle (exhaust passage) to the body, and remove the thermal baffle.

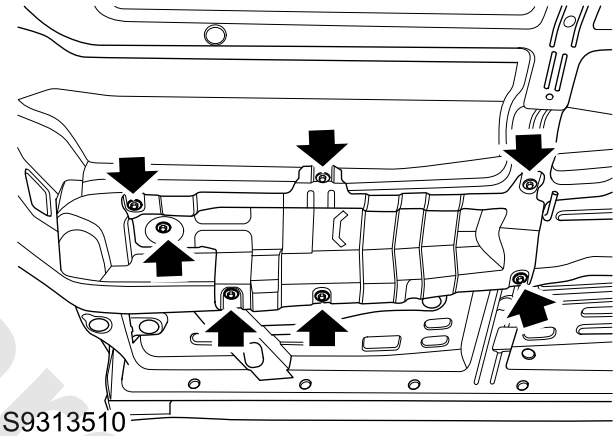

S9313510

Refit

1. Secure the heat shield (exhaust passage) on the body, fit 6 nuts, tighten to **4–6Nm**, and tighten one bolt to **4–6Nm**, then check the torque.
2. Lower the vehicle.

www.cargeek.ir

www.cargeek.ir

Engine Manifold & Exhaust System-1.5T

Specifications

Torque

Description	Value
screw-MAF	1.4-1.8Nm
screw-upper air cleaner to lower air cleaner	1.2–1.8Nm
Bolt-electronic throttle	8–12Nm
Nut-front vent-pipe to rear muffler	19–25Nm
Bolt-catalysts flange bracket to engine	19–25Nm
Nut-catalysts to flange bracket	19–25Nm
Nut-front vent-pipe to catalysts	19–25Nm
Bolt-catalysts fixing bracket to transmission	49–67Nm
Bolt-catalysts fixing bracket to catalysts	19–25Nm
Clamp-catalysts to V-clamp	13.5–16.5Nm
Bolt-shield asm-turbo	10–12Nm
Nut -heat shield to body	4–6Nm
Bolt -rear silencer Heat shield to body	4–6Nm
Clamp-hose-turbo to CAC	5–6Nm
Bolt-hose CAC to engine	7–10Nm
Clamp-hose CAC to engine	5–6Nm

www.cargeek.ir

www.cargeek.ir

www.cargeek.ir

Description and Operation

System Layout

www.cargeek.ir

www.cargeek.ir

www.cargeek.ir

Intake Air Layout

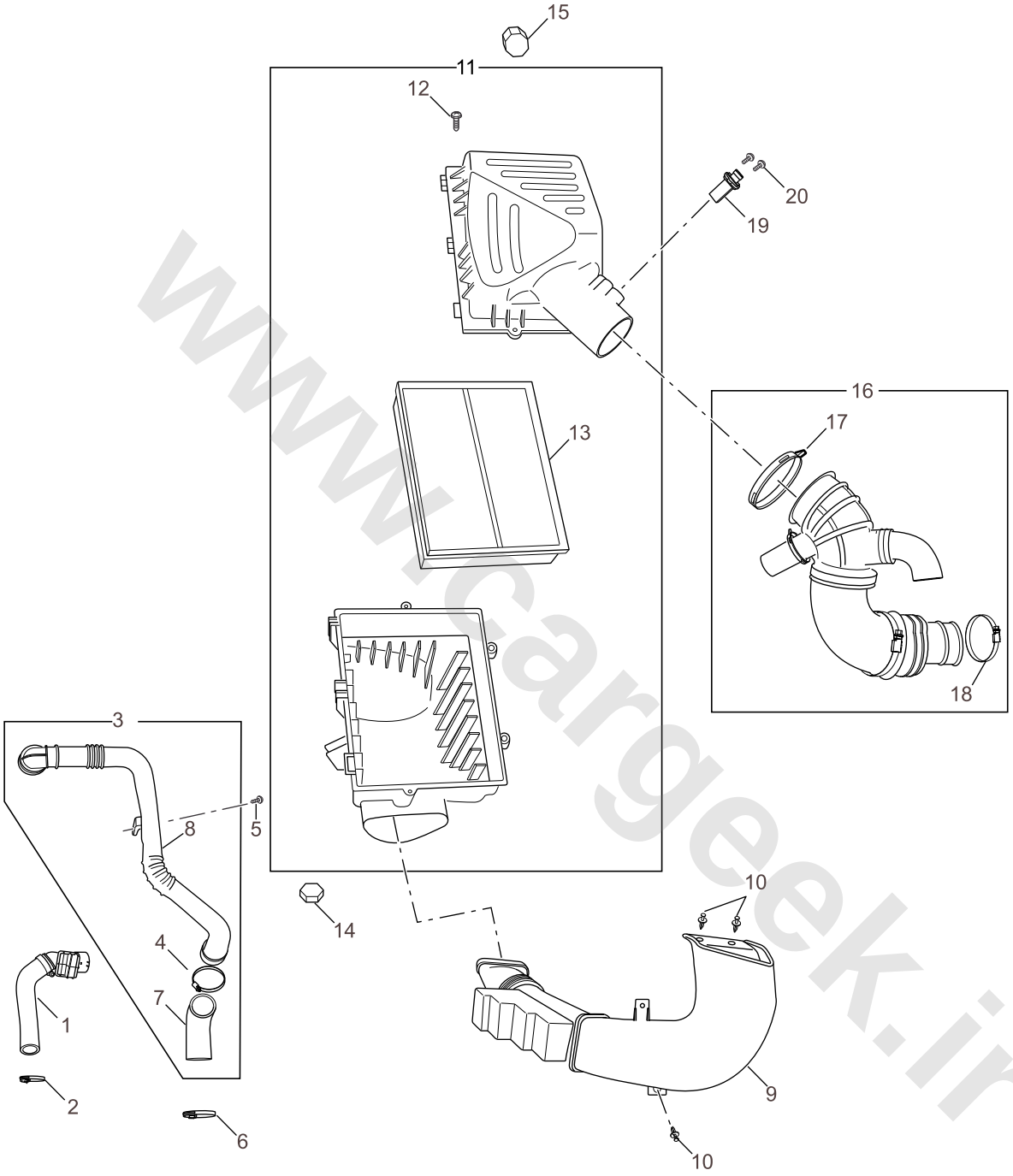

S1113148

1. Hose - Turbocharger to Intercooler
2. Clamp - Turbocharger to Intercooler Pipeline
3. Pipeline Assembly - Intercooler to Engine
4. Clamp - Intercooler to Engine Pipeline
5. Screw - Intercooler to Engine Pipeline
6. Clamp - Intercooler to Engine Pipeline
7. Pipeline Assembly - Intercooler to Engine
8. Pipeline Assembly - Intercooler to Engine
9. Air Filter Intake Pipe Assembly
10. Split Pin - Air Intake Pipe
11. Air Filter Assembly
12. Screw - Air Filter
13. Filter Element
14. Liner - Air Filter
15. Liner - Air Filter
16. Air Filter Outlet Pipe Assembly
17. Clamp - Air Filter Outlet Pipe Assembly
18. Clamp - Air Filter Outlet Pipe Assembly

www.cargeek.ir

19. Air Flow Meter
20. Screw - Air Flow Meter

www.cargeek.ir

www.cargeek.ir

Exhaust Air Layout

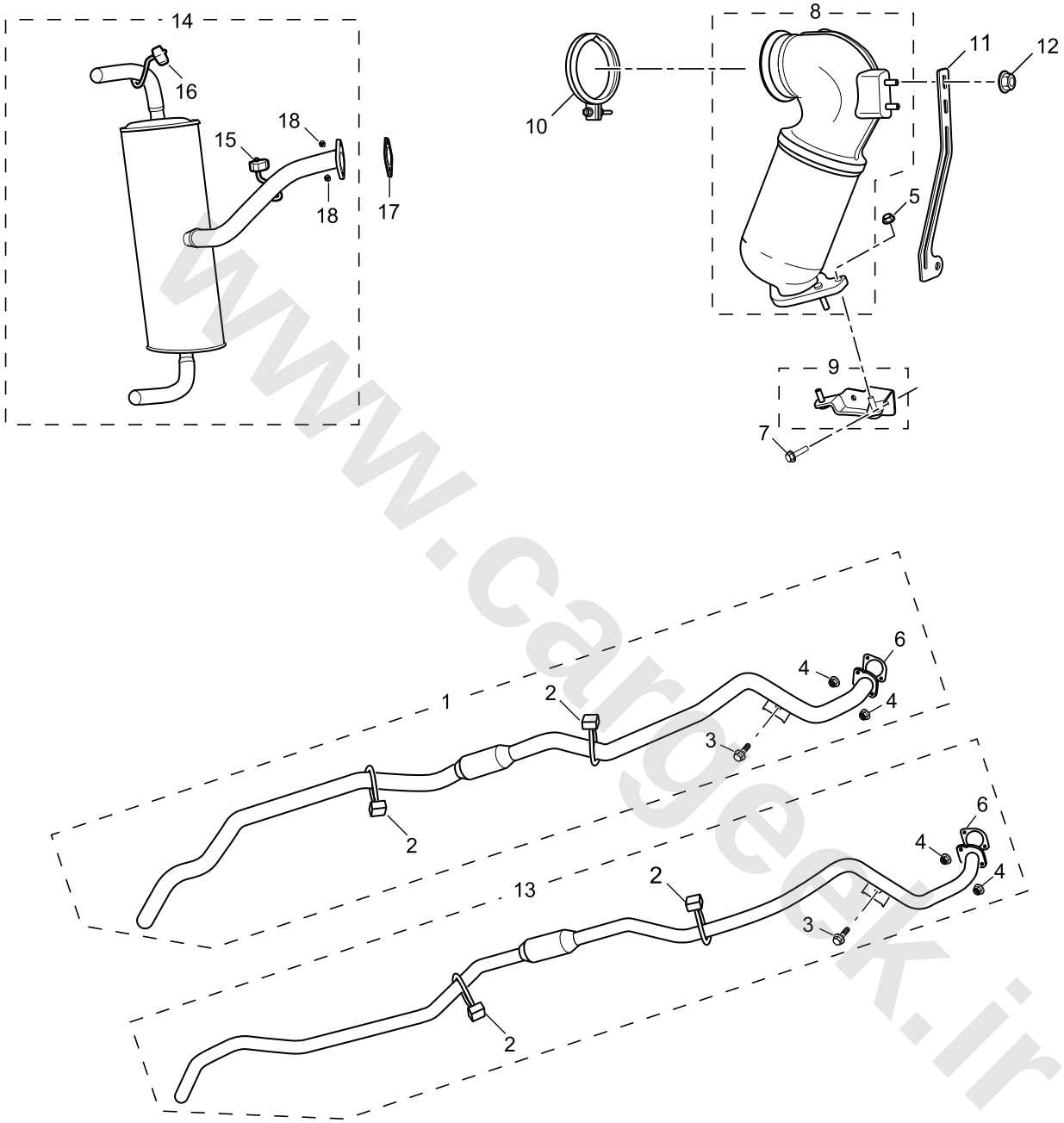

S1113149

1. Middle Exhaust Pipe Muffler Assembly (Four-Wheel Drive)
2. Middle Exhaust Pipe Front Lug
3. Bolt - Front Exhaust Pipe Bracket to Oil Pan
4. Nut - Exhaust Muffler
5. Nut - Catalytic Converter Bracket
6. Catalytic Converter Sealing Gasket
7. Bolt - Front Exhaust Pipe Bracket
8. Front Exhaust Pipe Three-way Catalytic Converter
9. Catalytic Converter Bracket
10. Clip - Front Exhaust Pipe
11. Catalytic Converter Bracket
12. Bolt - Front Exhaust Pipe Bracket
13. Middle Exhaust Pipe Muffler Assembly (Two-Wheel Drive)
14. Exhaust Rear Muffler Assembly
15. Exhaust Muffler Lug
16. Exhaust Muffler Lug
17. Gasket - Exhaust System
18. Nut - Exhaust Muffler

www.cargeek.ir

Description

Air Filter

The hose (air filter to turbocharger) is between the air filter and the turbocharger; the hose (turbocharger to intercooler) is between the turbocharger compressor and the intercooler; and the hose (intercooler to throttle body) is between the intercooler and the throttle body. Air filter assembly is fixed to the body with two rubber gaskets.

Exhaust System

It consists of a three-way catalytic converter and a muffler. Adjacent pipelines are fixed together by welding bolts, gaskets and nuts. Five rubber lugs fix the exhaust system to the body to buffer slight vibration of the exhaust system, and decrease the vibration transferred to the body. The thermal baffle can effectively reduce the heat transferred from the exhaust line to the body, and the tail pipe applies a stainless steel design.

www.cargeek.ir

www.cargeek.ir

www.cargeek.ir

Operation

Air Filter

Air enters into the front engine compartment and the intake pipe at the rear of the front bumper, and the impurities in the air are filtered by the air filter element.

Air from the air filter is transferred to the turbocharger compressor by the hose between the air filter and the turbocharger, it is then delivered to the intercooler by the hose between the turbocharger and the intercooler. The cooled fresh air is transmitted to the throttle by the hose between the intercooler and the throttle.

Exhaust System

The exhaust from the engine enters into the exhaust system by the turbocharger, it first passes through the three-way catalytic converter before flowing into the muffler. The front muffler is of an absorption type, and a perforated pipe passes through the muffler, which minimizes the airflow limit. The rear muffler is a reflective muffler which uses the internal hindered sound wave reflection to reduce the noise level.

Three-Way Catalytic Converter (TWC)

Warning: TWCs operate at very high temperatures; therefore, extreme caution is necessary when handling this component.

Caution: For the TWC to work efficiently and to prevent premature failure do not run on leaded fuel and do not allow unburnt fuel to pass through the exhaust system.

The primary combustion happens in the combustion chamber and the exhaust gas enters into **TWC**. **TWC**It operates effectively only when its minimum working temperature is achieved. The exhaust gas enters into an integral structure coated with Pd and Rh (catalyst), and two procedures (reduction and oxidation) are performed here. The nitrogen oxide (**NOx**) is restored to nitrogen, from which the oxide is combined with carbon monoxide (**CO**) to form carbon dioxide. The hydrocarbon (**CO**) and **CO** will continue to conduct combustion in the three-way catalytic converter with the oxygen in the air, which forms water and **CO**.

www.cargeek.ir

www.cargeek.ir

Service Procedures

Electronic Throttle Self-learning - UMC System

Self-learning

1. Confirm if the vehicle speed is 0 km/h and the engine speed is 0 r/min.
2. Connect the scan tool to the vehicle and access the **VDS**.
3. Select "Diagnosis — **ECM** — Real-time Display", ensure the battery voltage is above 10V, the accelerator pedal opening is 0, the coolant temperature is within 5℃ ~ 100℃ and the intake air temperature is higher than 5℃.
4. Check if the harness is properly connected and shows no other faults, mainly including throttle fault.
5. Place the ignition switch in "ON" position, wait for 30s, at this interval, do not do any other operations.
6. The self-learning is then completed.

Air Filter Assembly

Remove

1. Remove the air filter element.

☞ **Air Filter Element Remove**

2. Pull up the lower housing of the air filter assembly and move the lower housing of the air filter assembly from the mounting bracket, and then remove the lower housing of the air filter assembly from the mounting bracket.
3. Remove 2 tapping screws fixing the air flow meter to the upper housing of the air filter assembly, and remove the air flow meter.

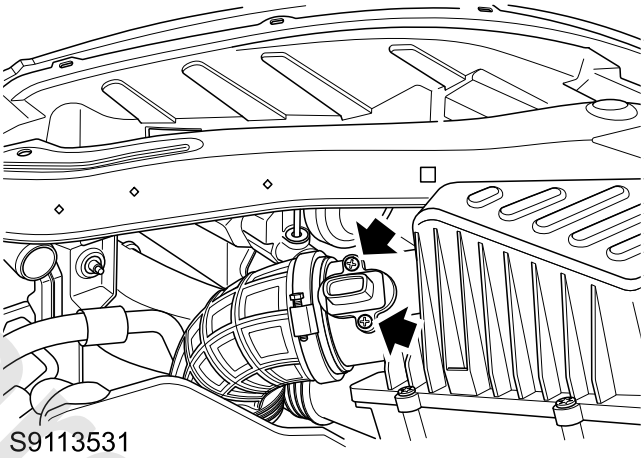

4. Loose the clamp, disconnect the air filter assembly outlet pipe, and remove the upper housing of air filter assembly.

Refit

1. Fix the air flow meter to the upper housing of the air filter assembly, fit 2 tapping screws, tighten to **1.4-1.8Nm** and check the torque.
2. Connect the joint of the lower housing of the air filter assembly to the air filter inlet pipe, and fit the lower housing of the air filter assembly to rear bracket, and then fit it to the front left bracket.
3. Fit the air filter element.

☞ **Air Filter Element Refit.**

www.cargeek.ir

Air Filter Element

Remove

1. Disconnect the battery negative cable.
2. Disconnect the air flow meter connector (1), and disconnect the clips from the upper housing of the filter assembly, and remove the harness.
3. Remove 4 screws (2) fixing the upper housing of the filter assembly to the lower housing of the filter assembly, and remove the upper housing of the filter assembly.

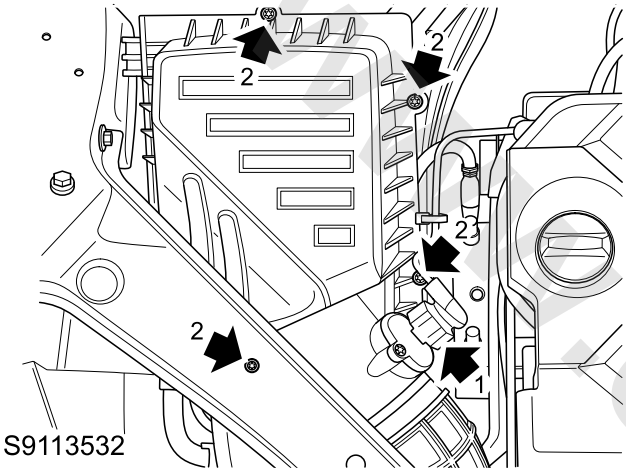

4. Remove the air filter element.

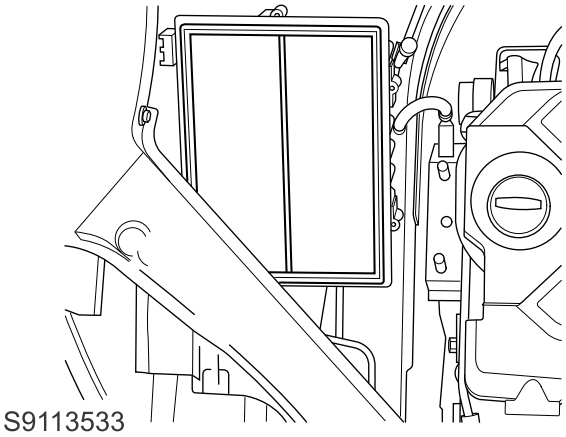

Refit

1. Clean the inside of the air filter.
2. Fit a new air filter element.
3. Fix the upper housing of the air filter assembly to the lower housing of the air filter assembly, fit 4 screws, tighten to **1.2–1.8Nm**.
4. Connect the air flow meter connector, and fix the harness to the upper housing of the air filter assembly.
5. Connect the battery negative cable.

Electronic Throttle

Remove

1. Disconnect the battery negative cable.
2. Remove the engine hood.
3. Disconnect the throttle air inlet pipe from the throttle.
4. Disconnect the electronic throttle electrical connector .
5. Disconnect the connecting hose connecting the canister solenoid valve to the electronic throttle.
6. Remove 4 bolts fixing the electronic throttle to the intake manifold, and remove the electronic throttle and discard the electronic throttle washer.

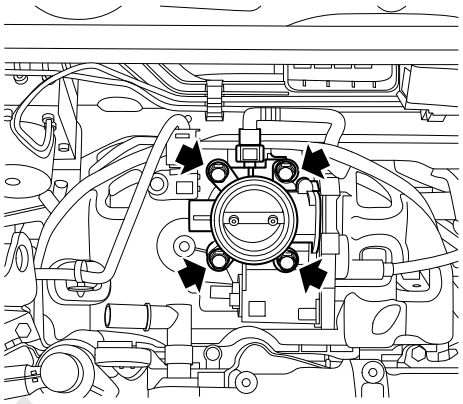

Refit

1. Fit a new electronic throttle gasket into the intake manifold groove (ensure the cleanness of the sealing surface).

Caution: Never insert any tool into the throttle hole to prevent damage to the throttle plate.

2. Clean the junction surface between electronic throttle and intake manifold, fix the electronic throttle to the intake manifold, fit 4 bolts, tighten to **8–12Nm**, and check the torque.
3. Connect the electronic throttle connector.
4. Connect the connecting hose of the canister solenoid valve to the electronic throttle.
5. Connect the electronic throttle air inlet pipe.
6. Connect the battery negative cable.
7. Perform electronic throttle self-learning.

☞**Electronic Throttle Self-learning**

www.cargeek.ir

Rear Muffler Assembly

Remove

Warning: Exhaust components get extremely hot during operation. Ensure exhaust components are sufficiently cooled before handling.

1. Raise the vehicle on an elevator.
2. Remove 2 nuts (1) fixing the front exhaust pipe assembly to the rear muffler assembly.
3. Fit 3 rubber lugs (2) fixing the rear muffler assembly to the body.

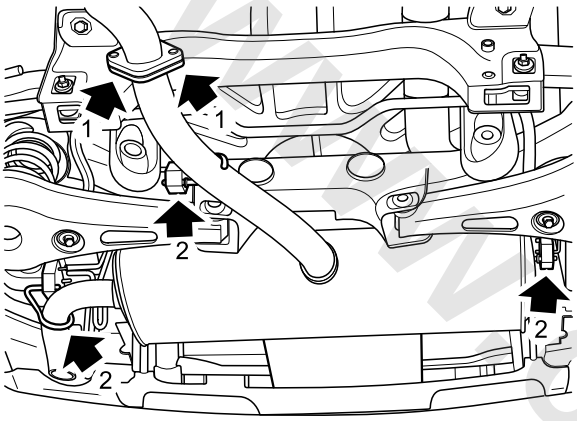

S9313546

4. Remove the rear muffler assembly.
5. Remove and discard the gasket.

Refit

1. Clean the flange face between the front exhaust pipe assembly and rear muffler assembly.
2. Fit a new liner to the flange face of the front exhaust pipe assembly.
3. Fit 2 nuts, tighten to **19–25Nm**, and check the torque.
4. Fit 3 rubber lugs fixing the rear muffler assembly to the body.
5. Lower the vehicle.

Three-way Catalytic Converter

Remove

1. Disconnect the battery negative cable.
2. Remove the front oxygen sensor.

☞ **Oxygen Sensor Remove**

3. Remove 3 bolts fixing the turbocharger heat shield to the turbocharger, and remove the turbocharger heat shield.

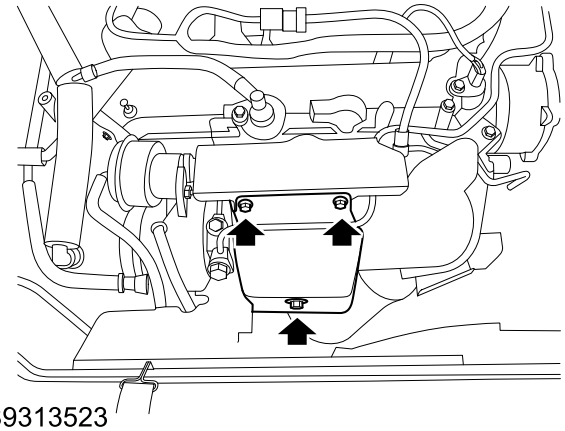

S9313523

4. Remove the clamp fixing the three-way catalytic converter to the turbocharger air outlet, and disconnect it from the turbocharger.
5. Remove 2 bolts (1) fixing the three-way catalytic converter bracket to the catalytic converter.
6. Remove the bottom deflector.

☞ **Bottom Deflector Remove**

7. Remove 1 bolt (2) fixing the three-way catalytic converter mounting bracket to the transmission box, and remove the bracket.

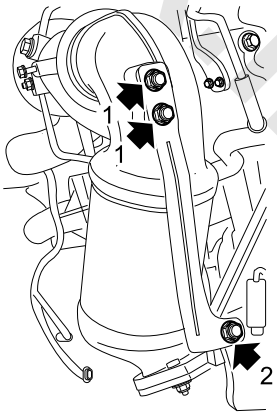

S9313525

8. Remove 2 nuts fixing the front exhaust pipe to the three-way catalytic converter, disconnect and discard the gasket.

www.cargeek.ir

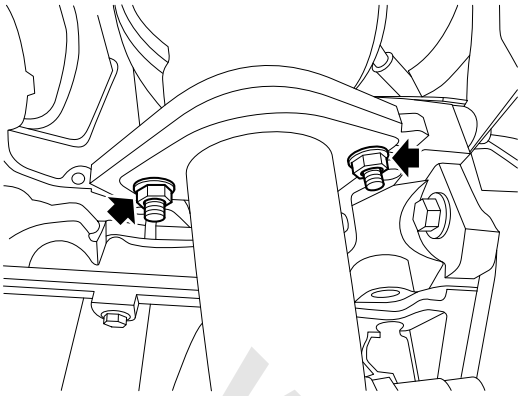

S9313516

9. Remove 2 nuts fixing the three-way catalytic converter to the flange bracket.

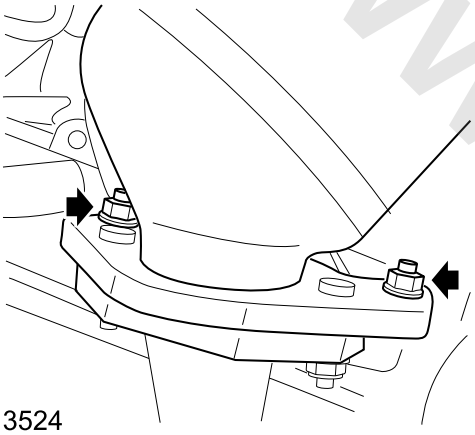

S9313524

10. Remove the three-way catalytic converter assembly.
11. Remove 2 bolts fixing the flange bracket to the engine, and remove the flange bracket.

Refit

1. Fix the flange support to the engine, fit 2 bolts, tighten to **19–25Nm**, and check the torque.
2. Fix the rear end of the three-way catalytic converter to the flange support, fit 2 nuts, tighten to **19–25Nm**, and check the torque.
3. Fit a new liner fixing the front exhaust pipe to the three-way catalytic converter, fit 2 nuts, tighten to **19–25Nm**, and check the torque.
4. Fix the three-way catalytic converter mounting bracket to the gearbox body, fit 1 bolt, tighten to **49–67Nm**, and check the torque.
5. Fit the bottom deflector.

Bottom Deflector Refit

6. Fix the mounting bracket to the three-way catalytic converter, fit 2 bolts, tighten to **19–25Nm**, and check the torque.
7. Fit the front end of three-way catalytic converter to the turbocharger, fix with clamps, tighten to **13.5–16.5Nm**, and check the torque.
8. Fix the turbocharger heat shield to the turbocharger, fit 3 bolts, tighten to **10–12Nm**, and check the torque.
9. Fit the front oxygen sensor

Oxygen Sensor Refit

10. Connect the battery negative cable.

www.cargeek.ir

www.cargeek.ir

Front Exhaust Pipe

Remove

Warning: Exhaust components get extremely hot during operation. Ensure exhaust components are sufficiently cooled before handling.

1. Remove the bottom deflector.

Bottom Deflector Remove

2. Remove the rear oxygen sensor.

Rear Oxygen Sensor Remove

3. Remove two nuts (1) fixing the middle muffler assembly to the front exhaust pipe, disconnect and discard the gasket.

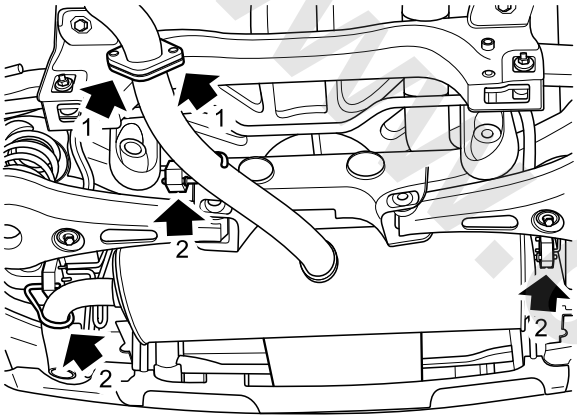

S9313546

4. Remove 2 nuts fixing the front exhaust pipe to the front catalytic converter, disconnect and discard the gasket.

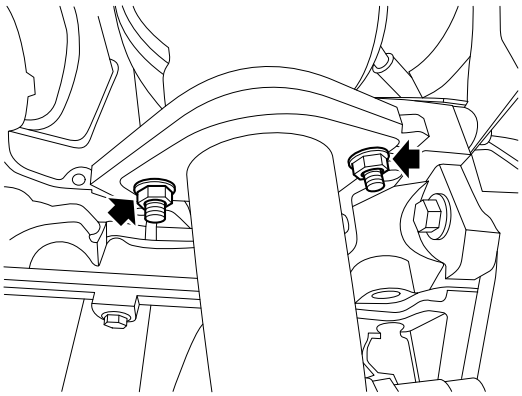

S9313516

5. Remove 2 rubber lugs fixing the front exhaust pipe to the body, and remove the front exhaust pipe assembly.

Refit

1. Clean the flange face of the front exhaust pipe.
2. Fit a new liner to the flange face of the three-way catalytic converter.
3. Align the hole in the front exhaust pipe flange face with the bolt of the three-way catalytic converter flange face, fit 2 nuts, tighten to **19–25Nm**, and check the torque.
4. Fit a new gasket at the flange connection between the front exhaust pipe and rear muffler assembly.
5. Insert the bolt of the front exhaust pipe flange face into the hole in the rear muffler assembly flange face, fit the nut, but do not tighten in this step.
6. Tighten the nut connecting the front exhaust pipe to rear muffler assembly to **19–25Nm**.
7. Connect the front exhaust pipe and the hook at the bottom of the vehicle body with rubber lugs.
8. Fit the rear oxygen sensor.

Rear Oxygen Sensor Refit

9. Fit the bottom deflector.

Bottom Deflector Refit

www.cargeek.ir

www.cargeek.ir

Heat Shield - Rear Muffler Assembly

Remove

Warning: Exhaust components get extremely hot during operation. Ensure exhaust components are sufficiently cooled before handling.

1. Remove the rear muffler assembly.

☞**Rear Muffler Assembly Remove**

2. Remove 7 nuts fixing the front exhaust pipe assembly thermal baffle to the floor panel and remove the rear muffler assembly thermal baffle.

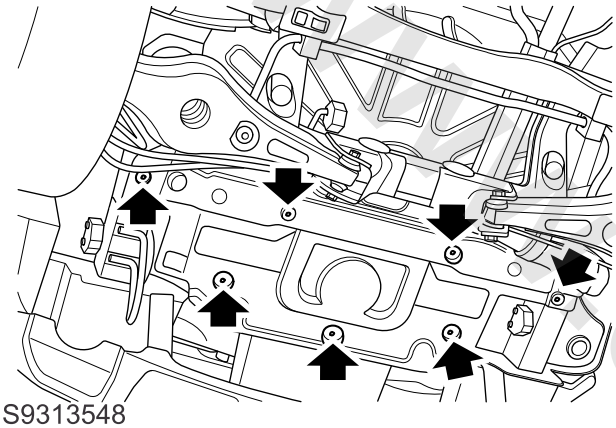

S9313548

Refit

1. Fix the rear muffler thermal baffle to the floor panel, fit 7 nuts, and tighten to **4–6Nm**.
2. Fit the rear muffler assembly.

☞**Rear Muffler Assembly Refit**

Heat Shield - Exhaust Passage

Remove

1. Remove the front exhaust pipe assembly.

☞**Front Exhaust Pipe Remove**

2. Remove 7 bolts fixing the front exhaust pipe assembly thermal baffle to the floor panel and remove the front exhaust pipe assembly thermal baffle.

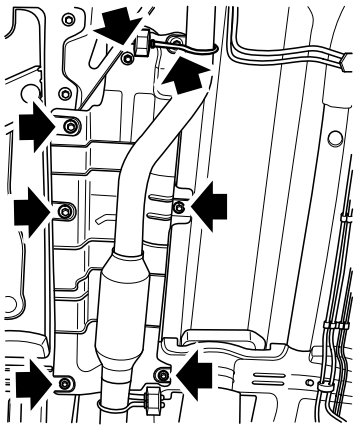

S9313547

Refit

1. Fix the front exhaust pipe assembly thermal baffle to the floor panel, fit 7 bolts, and tighten to **4–6Nm**.
2. Fit the exhaust pipe assembly.

☞**Front Exhaust Pipe Refit**

www.cargeek.ir

www.cargeek.ir

Hose - Turbocharger to Intercooler

Remove

1. Remove the bottom deflector.

Bottom Deflector Remove

2. Loosen the clamp fixing the hose to the intercooler end, and disconnect the connection (2) between the hose and the intercooler.

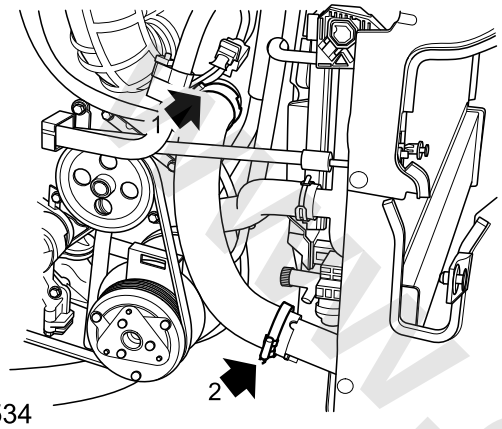

3. Loosen the quick joint (1) fixing the hose to the turbocharger end.
4. Remove the turbocharger to turbocharged intercooler hose assembly.

Refit

1. Position the hose into the engine compartment, and fit the quick joint to the turbocharger.
2. Connect the other end of the hose to the intercooler, fit the fixing clamp, tighten to **5–6Nm**, and check the torque.
3. Fit the bottom deflector.

Bottom Deflector Refit

Hose - Turbocharger Intercooler to Throttle Body

Remove

1. Remove the intake air pressure/temperature sensor.

Intake Air Pressure/Temperature Sensor Remove

2. Remove the harness and overflow pipe fixed to the hose.
3. Loosen the clamp (1) fixing the hose to the intercooler, and disconnect the hose from the intercooler.
4. Remove 1 bolt (2) fixing the hose assembly to the engine.

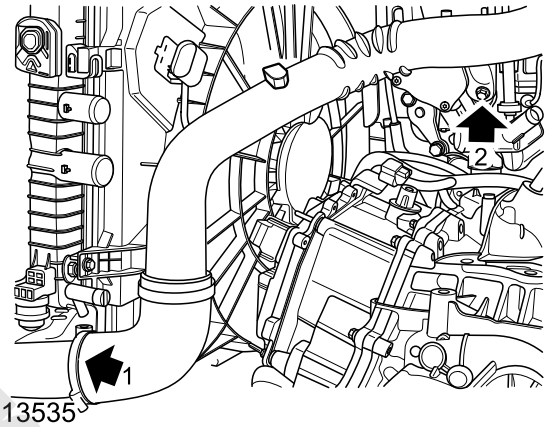

5. Turn the clamp fixing the hose to the throttle, loosen the quick joint, and disconnect the hose from the throttle.

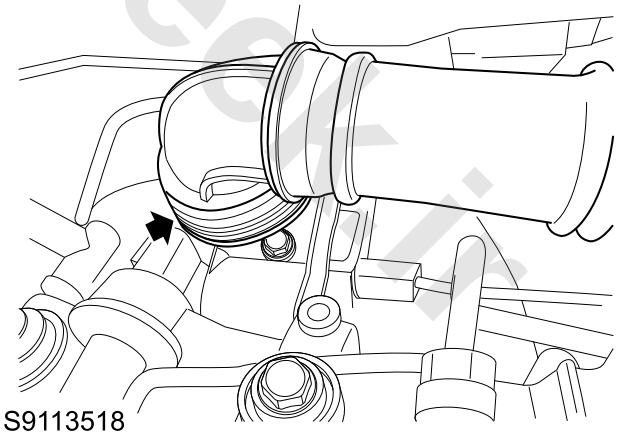

6. Remove the hose assembly between the turbocharger intercooler and the throttle.

Refit

1. Fix the hose assembly quick joint to the throttle, and fix it with clamps.
2. Fix the hose to the engine, fit 1 bolt and tighten to **7–10Nm**.
3. Connect the other end of the hose to the intercooler, fit the clamp, and tighten to **5–6Nm**.
4. Fit the harness and overflow pipe fixed to the hose

www.cargeek.ir

www.cargeek.ir

assembly.

5. Fit the intake air pressure/temperature sensor.

☞ **Intake Air Pressure/Temperature Sensor Refit**

www.cargeek.ir

www.cargeek.ir

Shift Lock Control-6 Speed Auto

Specifications

Torque

Description	Value
Screw-console panel to console	3–5Nm
Nut - gear change mechanism to floor	19–25Nm
Bolt- park cable to floor	10–15Nm
Screw-Block a display panel to console	3–5Nm

www.cargeek.ir

www.cargeek.ir

Description and Operation

System Control Diagram

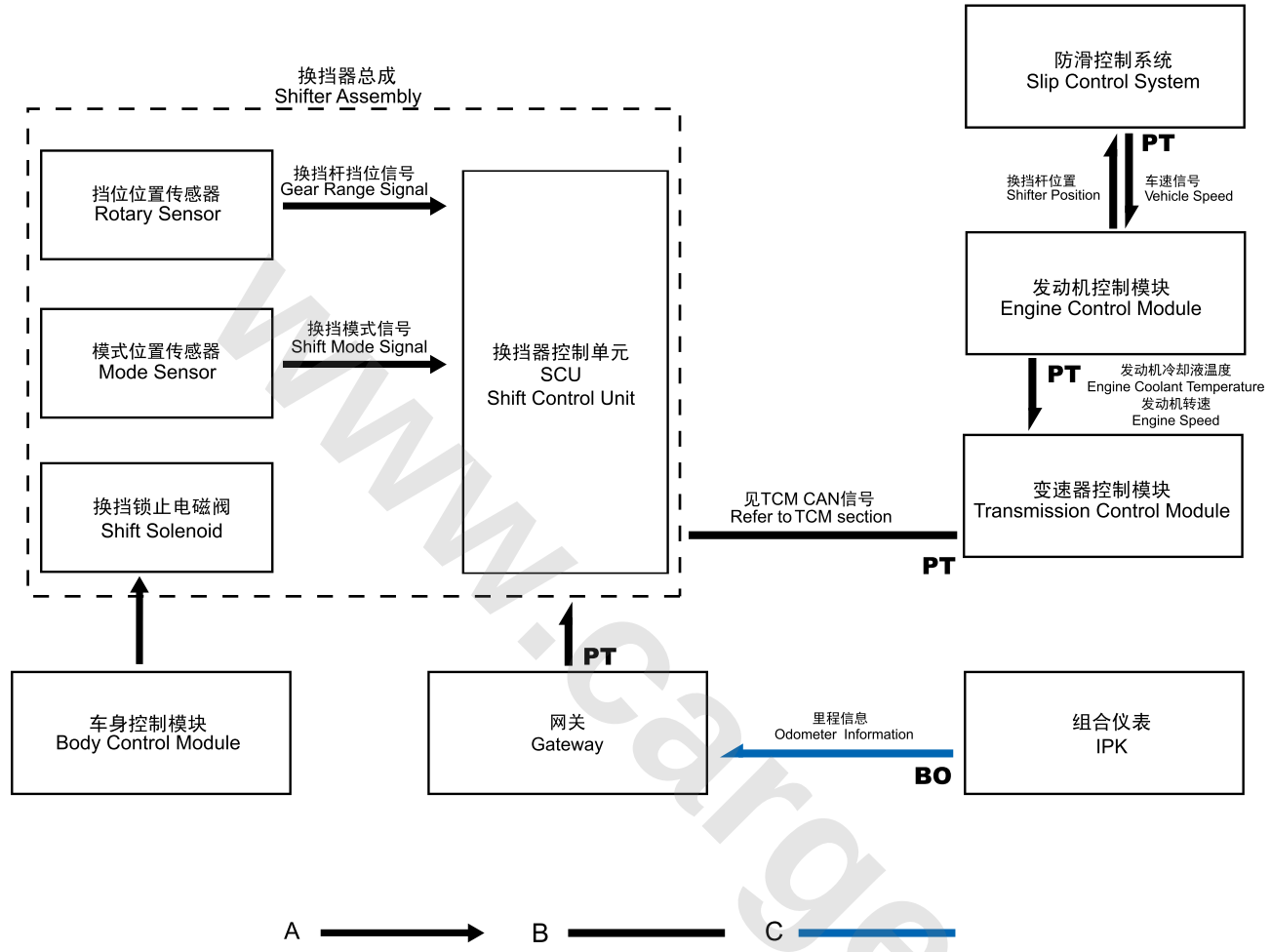

S9221001

A = Hard Wire; B = Power HS CAN Bus; C = Body HS CAN Bus

www.cargeek.ir

www.cargeek.ir

Description

Overview

Functions of the shift controller are as follows:

1. Collect the current position information of the shift lever.
2. Output shift position signal.

The shifter adopts high speed **CAN** bus method to exchange the information with other external electronic control units. The actual data exchange only involves the body control module (**TCM**). The position information (P, R, N, D/S, W, +, -) of the shift lever is obtained by reading the signal from the gear position sensor, while the mode information (auto, sport) is obtained through the mode position sensor, and the position or mode information collected is sent to the **TCM** via the **CAN** bus.

The shifter drives the **LED** indicator on the shift panel to indicate the current gear and mode of the transmission, and the corresponding **LED** indicator are provided on some positions ("P", "R", "N", "D/S", "W", "+" (M+) and "-" (M-). When the ignition switch is in "ON" position, the program illuminates the corresponding **LED** indicator according to the gear and mode information of the transmission.

The lock-up solenoid valve is completely under the control of the **BCM**, when the conditions for unlocking are met, the **BCM** will supply a 12V power to the solenoid valve directly, then the solenoid valve can unlock.

Shift Lever Position

The shift lever operation positions are as follows:

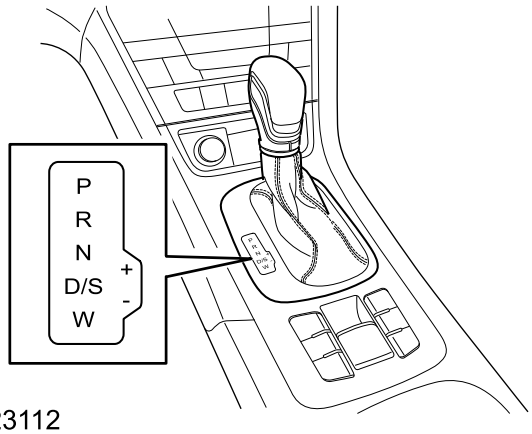

S9223112

- P: Parking.

  The transmission is locked by the parking mechanism to prevent the vehicle from sliding. Only when KL.15 is ON, the brake pedal is depressed and the lock button on the shift lever knob is pressed, can the shift lever be moved from the position.

- R: Reverse.

  It can be selected only when the vehicle is in stationary and the engine is idling.

- N: Neutral.

  No torque passes to the wheel.

- D: Drive.

  In this position, all 6 forward gears can be selected. It is the default selected position for common driving.

- W: Snow Mode

  The position allows **TCM** to adopt snow mode , for starting off on smooth or slippery roads.To enter into the snow mode, press the lock button on the shift lever knob.

- S: sport mode, located between "+" (M+) and "-" (M-).
- +/-: Tiptronic mode (M).

Tiptronic Shifting

If the shift lever moves from "D" position to right side, the system will automatically enter into “S” sports mode with different gear shift parameters. When the shift lever is moved forward or backward and then returned to "S/M" position, the Tiptronic mode is separated from "S" mode to provide manual shift control. Move the shift lever forward (+) to finish upshift and backward (-) to finish downshift. In addition, the shift paddle on the steering wheel of some models also provides manual shift control. To exit Tiptronic mode, return the shift lever to "D" gear.

Shifter

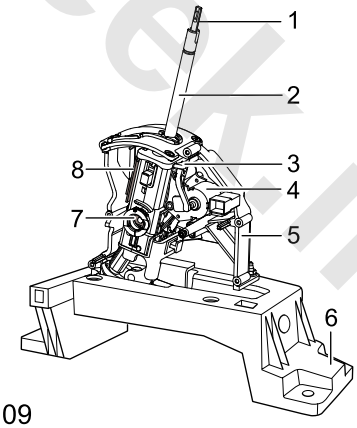

S9223109

The shifter assembly is composed of the **SCU**, control lever, base, housing, parking cable and lock-up solenoid valve, etc, and a locking pin hole of the "P" gear is set on the right housing. Shifter base is fixed to the central body passage by 4 bolts.

1. Lock Button Draw Bar
2. Shift Lever
3. P Gear Emergency Unlock Mechanism
4. Lock-up Solenoid Valve
5. Housing

www.cargeek.ir

6. Shifter Base
7. Gear Position Sensor (Hall Rotation Angle/Position)
8. **SCU** (with 2 mode position sensors)

Lock-up Solenoid Valve

The shifter is equipped with a lock-up solenoid valve on the shift lever, and the **BCM** controls it to unlock.

Shift Lever Locked in P Gear

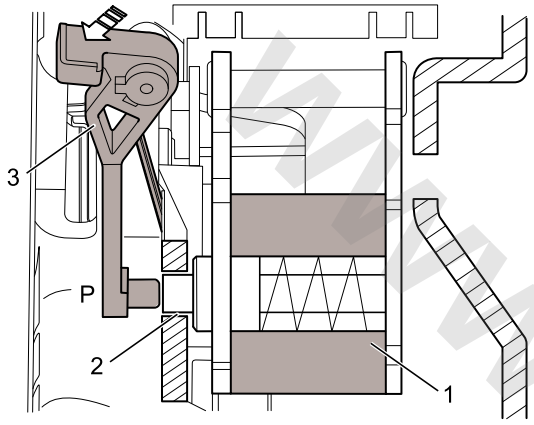

1. Lock-up Solenoid Valve
2. P Gear Locking Pin Hole
3. P Gear Emergency Unlock Mechanism

When the shift lever is in "P" position, the lock-up solenoid valve is not activated, and the locking pin on the solenoid valve is in the P gear locking pin hole on the shifter housing to prevent the shift lever from being moved accidentally. When the ignition switch is inserted and moved into position 2, the shift lever is in "P" position and the brake pedal is depressed, **BCM** energizes the lock-up solenoid valve, then the lock-up solenoid valve is powered on and activated, and thus the locking pin is removed from the P gear locking pin hole on the housing. Then press the lock button to move the shift lever out of the "P" gear.

Shift Lever Released from P Gear in Emergency

If the shift lever is in "P" gear, the power of the shift lever lock-up solenoid valve will be cut off, then the lock-up solenoid valve will keep locking, and the shift lever cannot be moved. Turn the emergency unlocking mechanism to press the locking pin from the hole, then the shift lever can be released from P gear in emergency.

End View of Shifter End Connector

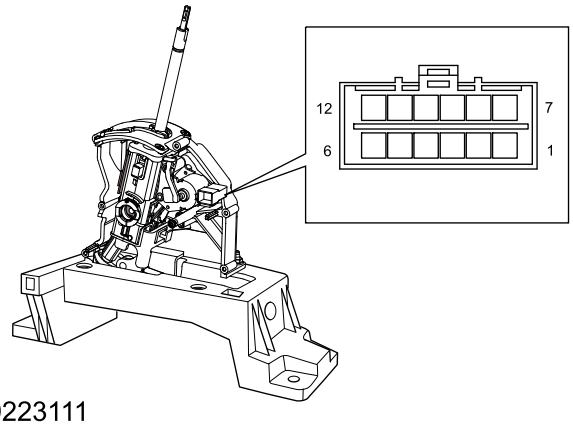

End View and Pin Information of SCU Harness Connector BY119

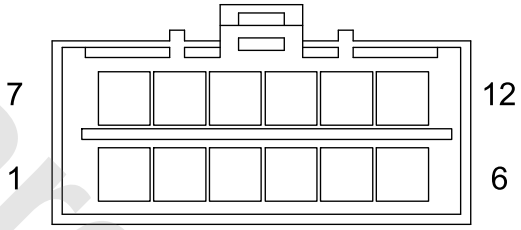

Pin No.	Description
1	KL.30
2	KL.15
3	Power HS CAN High
4	Ground
5	Power HS CAN Low
6	Solenoid Valve (P gear unlocking)
7	Wake-up Signal Line
8	—
9	—
10	—
11	—
12	—

Parking Brake Cable

The shifter cable used for P gear prevents the vehicle from sliding by using the parking mechanism in the transmission to lock the parking gear on the differential housing. One end

www.cargeek.ir

of the parking brake cable is connected to the bottom of the shifter shift lever, and the other passes through the central passage and connects the rocker arm of the parking brake cable shaft outside the transmission by bushings, bolts and nuts.

www.cargeek.ir

www.cargeek.ir

www.cargeek.ir

Operation

Gear Signal Collection

To ensure the reliable output of the gear signal, it adopts 2-way redundancy design, and equips two gear position sensors in the inductive chip (the gear position sensors are Hall rotation angle position sensor). If one of them has problem, the **SCU** shall perform self-diagnosis and save related DTC (**DTC**), however, the shifter is still able to provide normal gear signal. While the radially magnetized magnet on the shift lever housing (at P gear emergency unlocking mechanism side) is rotating above the chip surface, the sensor in the chip shall induct the angle position of the shift lever and output the gear information to the **SCU** through the chip processor, by this way, the sensor judges the position of P, R, N, D/S、W and +, -.

The shift mode determines if the actual voltage and nominal voltage of the senor is in auto mode/sport mode by 2 mode (Hall) position sensors welded on the back of the **SCU** circuit board.

Solenoid Control

P Gear

When the shift lever is at P gear, it is impossible to remove the shift lever from P gear if the solenoid is in LOCK position. When the shift lever leaves P gear, it is possible to push the shift lever even if the solenoid is in the LOCK position; however, when the shift lever is pushed back to P gear, it will be locked by the mechanical mechanism again. To leave P gear, the following 3 conditions shall be met.

1. The ignition key at KL15;
2. Depress the brake pedal;
3. **BCM** delivers a signal showing the vehicle anti-theft is passed.

Voltage Status/Mode

The power voltage has three states: normal, low and high.

Battery voltage is high:

- Voltage < 16V for more than 1s, SCU records fault; when voltage is below 17.5V, it shall support communication.

Battery voltage is low:

- Voltage < 9V for more than 1s, SCU records fault; when voltage is above 6V, it shall support communication.

www.cargeek.ir

www.cargeek.ir

Service Procedures

Shift Lever Knob and Gear Display Panel - Dual Clutch Automatic Transmission

Remove

1. Disconnect the battery negative.
2. Pull the lock button on the shift lever outward until the button comes out from the groove and does not retract.

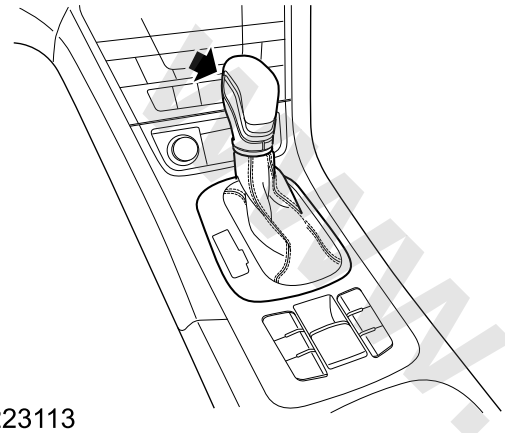

S9223113

3. Remove the cigar lighter.

☞ **Cigar Lighter Remove**

4. Remove 2 screws fixing the center console trim panel to the center console.

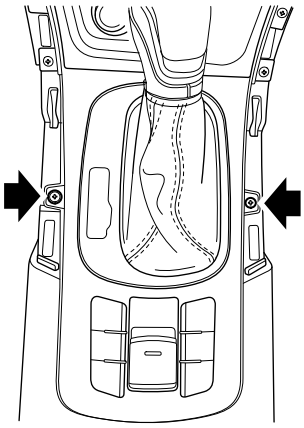

S9223101

5. Pry the center console trim panel.
6. Remove the bushing from the trim panel gear display panel of the center console.
7. Release the metal clamp of the knob rod.
8. Carefully pull up the shift lever knob, and remove the knob and bushing from the shift lever.

Refit

1. Fit the ring to the knob and fit the knob into the bushing.
2. Locate the clamp to the knob.
3. Pull the lock button on the shift lever outward until the button comes out from the groove and does not retract, otherwise, the knob gripper cannot embed into the draw bar hole of the shifter.
4. Fit the knob and bushing to the shift lever of the shifter.
5. Press the knob into the shift lever and secure the clamp.
6. Press the lock button and check if it can retract freely, if it does, the knob and draw bar are correctly fitted.
7. Embed the bushing into the trim panel gear display panel on the center console.
8. Secure the center console trim panel on the center console, fit 2 screws, tighten to **3–5Nm**, and check the torque.
9. Fit the cigar lighter.

☞ **Cigar Lighter Refit**

10. Connect the battery negative.

www.cargeek.ir

www.cargeek.ir

Shifter Assembly - Dual Clutch Automatic Transmission

Remove

1. Place the shift lever in "P" gear.
2. Disconnect the cable ball joint at the transmission side from the parking brake cable rocker arm.
3. Release the C-clip from the parking cable bracket, and release the cable support.

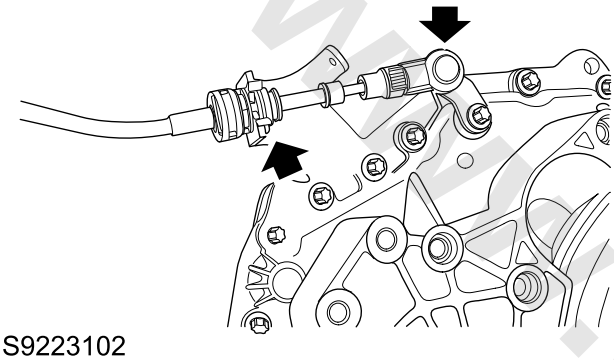

S9223102

4. Remove the cable from the cable support.
5. Remove the center console assembly.

Center Console Assembly Remove

6. Remove 2 bolts the parking brake cable to the underbody.

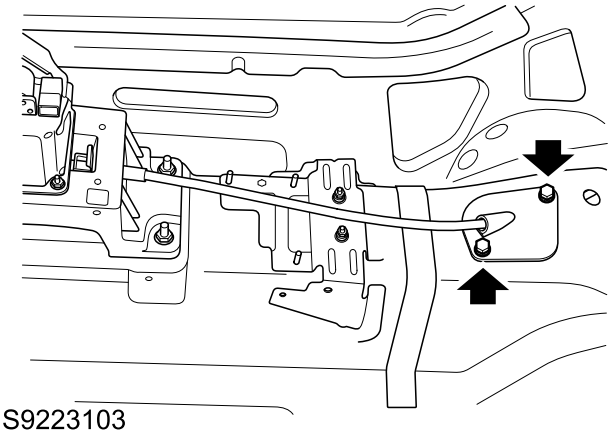

S9223103

7. Disconnect the shifter connector.
8. Remove 4 nuts fixing the shifter assembly to the central body passage and take away the shifter assembly.

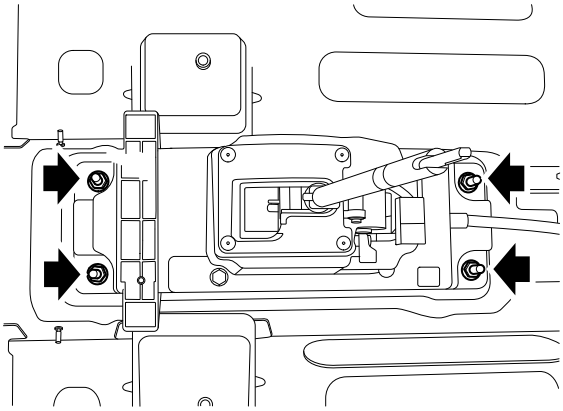

S9223104

Refit

1. Fix the shifter assembly to the central body passage, fit 4 nuts, tighten to **19–25Nm**, and check the torque.
2. Connect the connector and secure the harness on the shifter.
3. Fix the parking brake cable to the underbody, fit 2 bolts, tighten to **10–15Nm**, and check the torque.
4. Fit the center console assembly.

Center Console Assembly Refit

5. Fit the cable ball joint at the transmission side to the parking brake cable rocker arm.
6. Locate the parking brake cable to its bracket and secure with C-clip.
7. Adjust the parking brake cable.

Parking Brake Cable Adjustment

www.cargeek.ir

Shift Lever P Gear Emergency Unlocking - Dual Clutch Automatic Transmission

Unlocking

1. Disconnect the battery negative.
2. Remove the cigar lighter.

☞ **Cigar Lighter Remove**

3. Remove 2 screws fixing the center console trim panel to the center console.

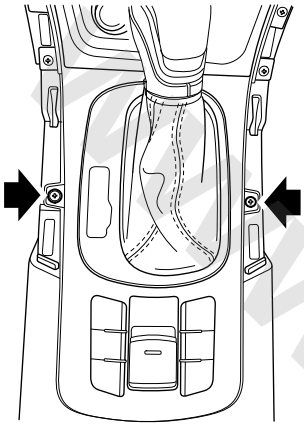

S9223101

4. Pry the center console trim panel.
5. Push the exposed unlocking lever according to the arrow direction shown in the figure.

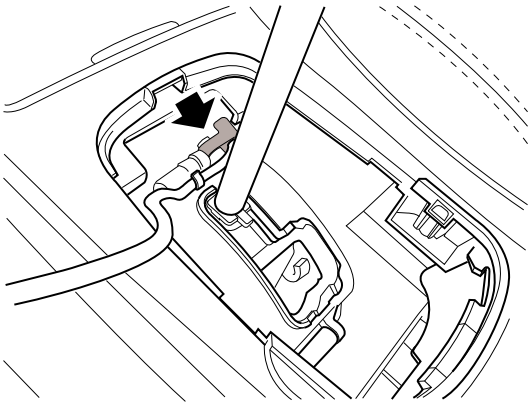

6. Move the shift lever from "P" gear to other gears.

Parking Cable Inspection and Adjustment - Dual Clutch Automatic Transmission

Check

1. Place the shift lever in "P" gear.
2. Release the cable regulating clip from the transmission.

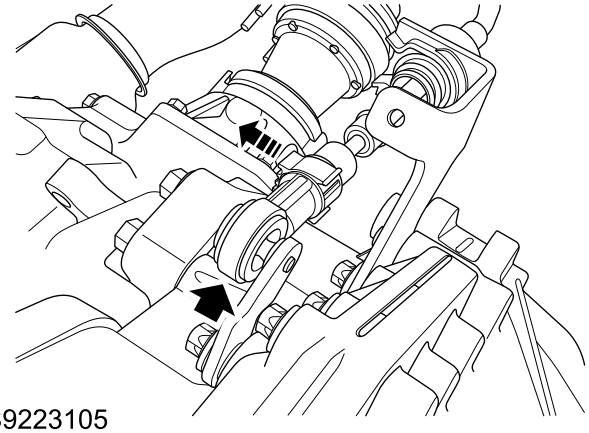

S9223105

3. Place the cable at the transmission side properly, and ensure it will not contact with any other locations.
4. Move the shift lever from "P" to "W" repeatedly, then back to "P" gear, the shift lever should move smoothly.

Adjustment

Adjust the shift lever cable under the following conditions:

- The shift lever cable is disconnected.
- The engine and/or transmission is removed or fitted.
- The shifter assembly is removed or fitted.
- The parking shaft rocker arm is removed or fitted.
- The shift cable bracket is removed or fitted.

1. Release the cable regulating clip from the transmission.

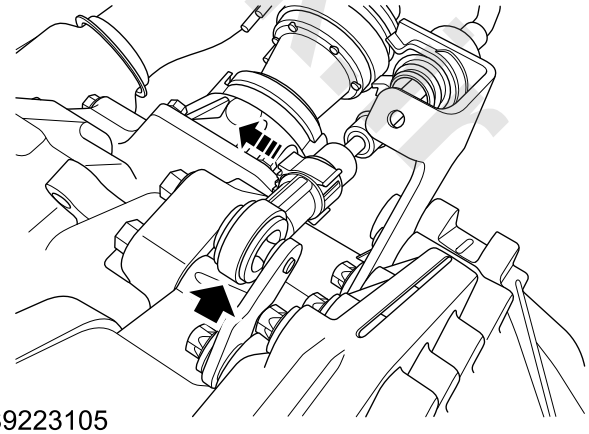

S9223105

2. Place the shift lever of the centre console in "P" gear.
3. Pull the parking shaft rocker arm of the transmission towards the "P" mark on the transmission until it cannot be moved, this can also push the transmission in "P" gear.

www.cargeek.ir

www.cargeek.ir

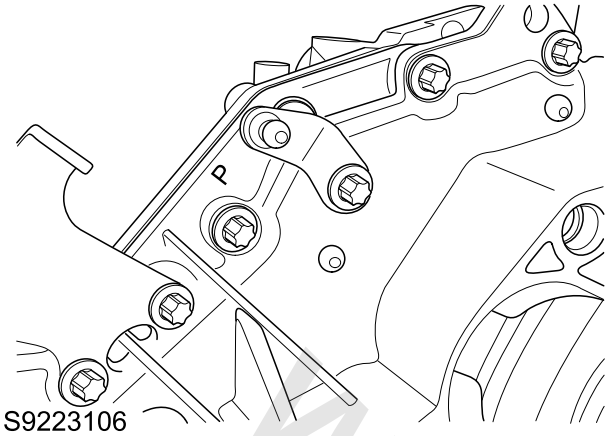

S9223106

4. Any of the following methods can be used to check if "P" gear parking of the transmission is completely locked:

- When both front two wheels cannot turn towards the same direction after the vehicle is raised
- Release the parking brake and service brake, the vehicle cannot be pushed or when it is pushed to move (the moving distance shall not more than 20cm) a "click" can be heard.

5. By this way, the parking pawl is completely engaged in the tooth of the parking gear, this indicates that the transmission is fully locked in "P" gear, then fit the cable properly.

Caution: Parking pawl may not insert parking gear completely in P range, if install shift cable in this situation, incorrect gear range could result.

6. Reset and tighten the transmission cable regulating clip to lock the cable.

Gear Indicator

Remove

1. Disconnect the battery negative.
2. Remove the cigar lighter.

Cigar Lighter Remove

3. Remove 2 screws fixing the center console trim panel to the center console.
4. Pry the center console trim panel.

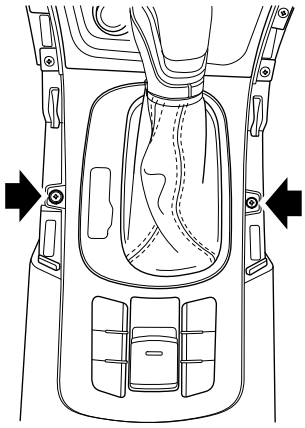

S9223101

5. Remove the bushing from the gear display panel.
6. Disconnect the connector at the rear of the center console trim panel, and remove the center console trim panel.
7. Remove 4 screws fixing the gear display panel to the center console trim panel, and remove the gear display panel.

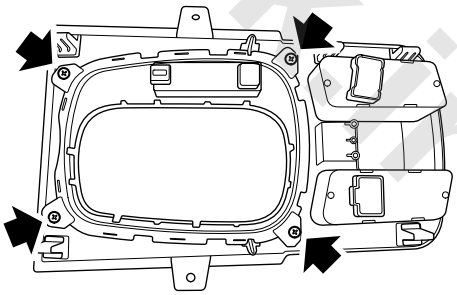

S9223107

8. Remove the gear indicator from the gear display panel.

www.cargeek.ir

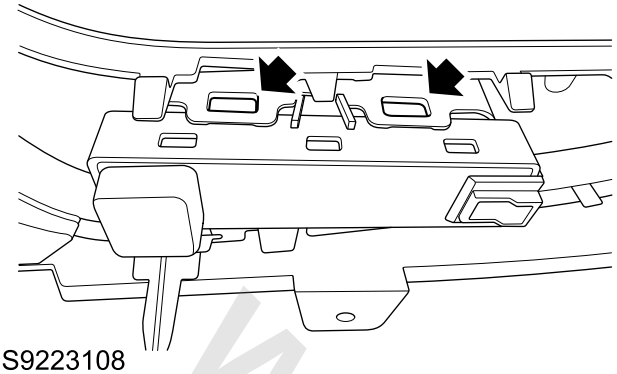

S9223108

Refit

1. Fit the gear indicator into the gear display panel.
2. Secure the gear display panel on the center console, fit 4 screws, tighten to **3–5Nm**, and check the torque.
3. Connect the connector at the rear of the center console trim panel.
4. Embed the bushing into the trim panel gear display panel on the center console.
5. Secure the center console trim panel on the center console, fit 2 screws, tighten to **3–5Nm**, and check the torque.
6. Fit the cigar lighter.

Cigar Lighter Refit

7. Connect the battery negative.

www.cargeek.ir

www.cargeek.ir

www.cargeek.ir

Shift Lock Control-7 Speed Auto

Description and Operation

System Layout

Shift Mechanism System Layout

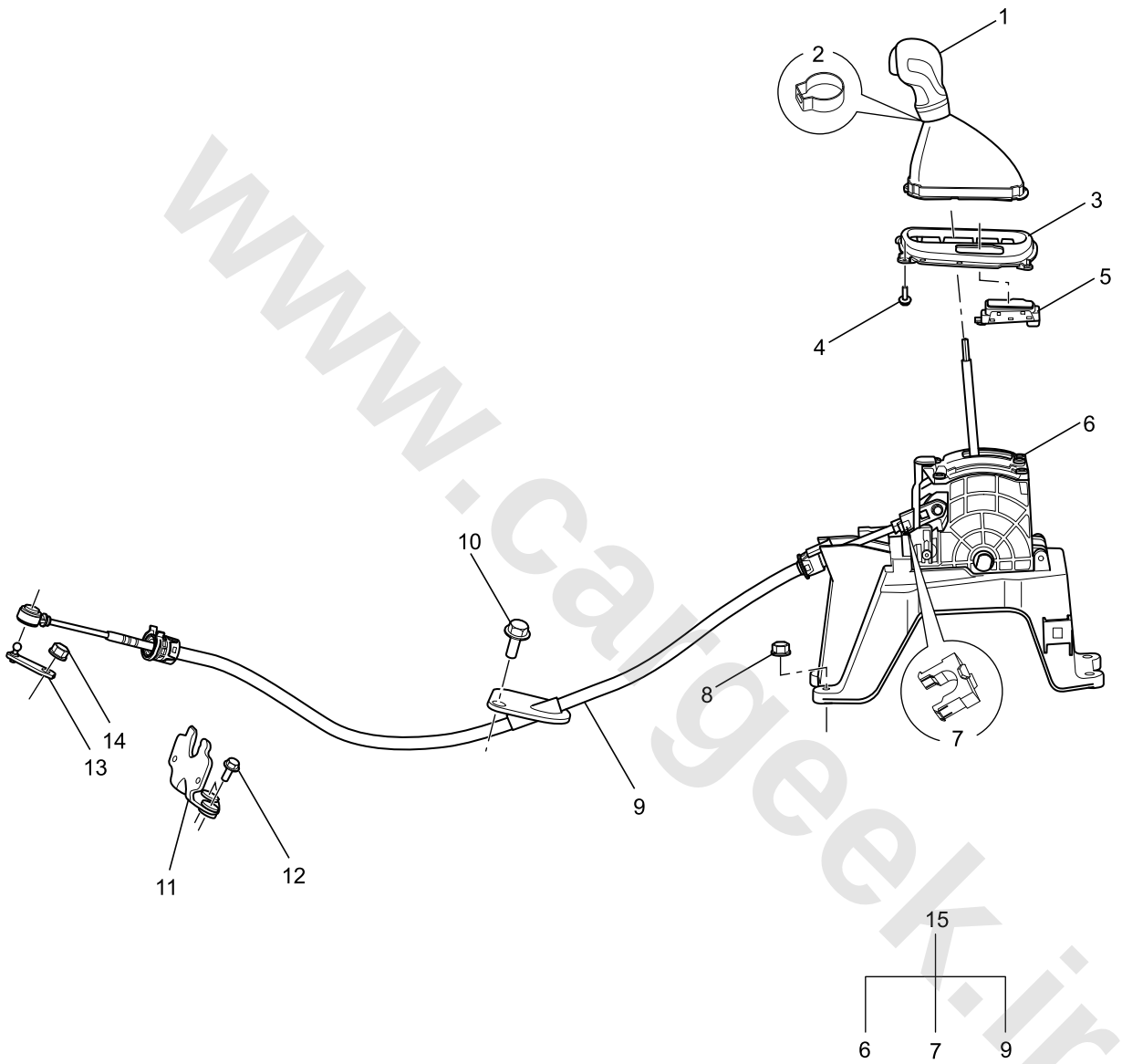

S9221005

1. _Shift Mechanism Knob Assembly
2. Snap Ring
3. Shift Panel
4. Screw - Shift Panel
5. Transmission Shift Display Panel
6. Automatic Transmission Shift Mechanism
7. Striker
8. Nut - Shift Mechanism
9. Shift Cable
10. Bolt - Shift Cable
11. Shift Cable Bracket
12. Bolt - Shift Cable Bracket
13. Gear Shift Rocker Arm
14. Nut - Gear Shift Rocker Arm
15. Automatic Transmission Shift Mechanism Assembly

www.cargeek.ir

www.cargeek.ir

Description

Gear Shift Control Mechanism

The gear shift control mechanism mainly consists of a shift lever, a base, a gear shift lock-up solenoid valve, a gear shift cable, etc. The gear shift control mechanism base is fixed to the body central passage by 4 nuts. The inner latch of shift lever is engaged with the inner groove of base.

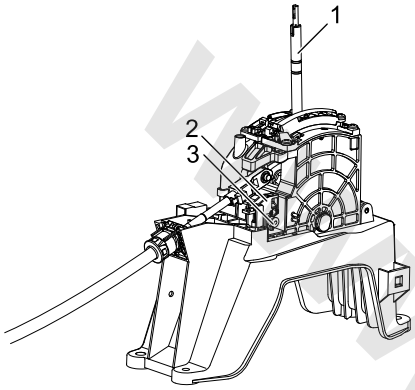

S9223218

1. Shift lever
2. Unlock lever
3. Gear Shift Lock-up Solenoid Valve

Shift lever position operation is as follows:

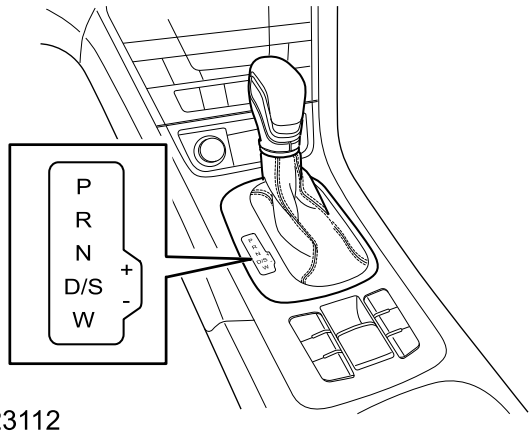

S9223112

- P: Lock the transmission to prevent the wheel glides.
- R: Choose it only when the vehicle is still and the engine is idling.
- N: No torque passes to wheel.
- D: All 7 forward gears can be used while in this position. This is the default choosing position of normal driving.
- W: The position provides the snow mode for **TCM**, for starting on smooth or slipping low-adhesion roads.
- S: Sport mode.
- +/- : Tiptronic.

Tiptronic Shift

If shifting rod from "D" position to right side, the system will automatically enter into sports mode with different shifting parameters. Then move shift rod Tiptronic mode and sports mode separated, offering manual shift controlling. Moves shift rod Upward (+) to finish upshift, moves shift rod backward (-) to finish downshift. In addition, the shift paddle on the steering wheel also provides manual shift control for transmission. To exit Tiptronic mode, return shift lever to "D" position.

Gear Shift Lock-up Solenoid Valve

The transmission is equipped with a gear shift lock-up solenoid valve located at the bottom of shift lever. The operation of the solenoid valve is determined by **BCM**-controlled gear shift lock-up relay in the passenger compartment fuse box.

When the shift lever is in P position, with the ignition switch On and the brake pedal not applied, the lock-up solenoid valve is not activated at the time. The lock tab of P position lock block contacts with the corresponding groove at the shift lever bottom so as to prevent the accidental movement of shift lever. The lock-up solenoid valve is activated only when the brake pedal is depressed. Enable the solenoid valve to make the solenoid valve push rod move towards front part of the vehicle, so as to push the lock tab of P position lock block away from the corresponding groove at shift lever bottom. Simultaneously, press the lock button on the shift lever knob to allow the shift lever freely change to other positions from P position.

Shift Lever Moving out of P Position in Emergency

With the ignition on and brake pedal depressed, when the shift lever cannot be moved out of P gear, turn off the ignition switch, pull out the ignition key and apply the parking brake, pry up the upper trim panel of the center console with a proper tool, press the P gear emergency unlock button located at the left upper corner of the gear shift mechanism, move the shift lever to N position simultaneously, start the engine and shift to the required gear.

Gear Shift Cable

The gear shift cable connects the shift lever to the shift rocker arm on the transmission. The outer cable is fixed to the shift lever assembly end by a C-clamp and fixed to the body and transmission end by two bolts respectively. The inner cable at the shift control mechanism end is connected with the shift lever, and the inner cable at the transmission end is buckled to the transmission shift rocker arm via a cable ball joint.

www.cargeek.ir

Service Procedures

Shift Lever Knob and Sleeve Assembly

Remove

1. Disconnect the battery negative cable.
2. Pull the locking button on the shift lever outwards, till the locking button exposes the slot without returning.

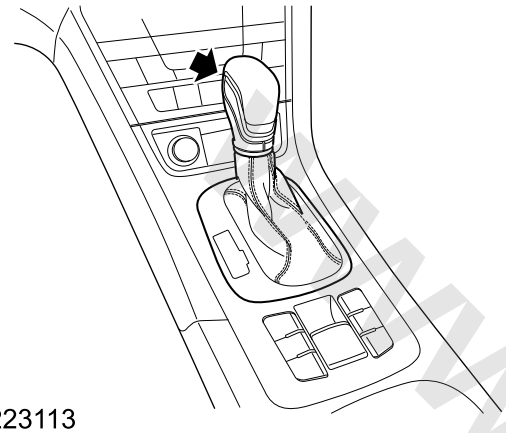

S9223113

3. Remove the both left and right sides A/C control panel bolt trim panel.
4. Remove 2 screws fixing the central pillar upper trim panel to the central pillar.

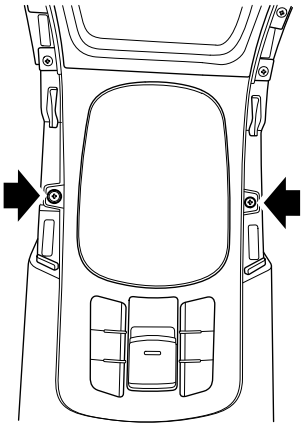

S9223101

5. Pry up the center console upper trim panel.
6. Remove the sleeve from the center console trim panel gear display panel.
7. Loosen the metal clamp on the knob.
8. Pull up the shift lever knob with care, and remove the knob and sleeve from the shift lever.

Refit

1. Locate the trim ring to the knob, and screw the knob into sleeve.
2. Locate a new metal clamp to the knob.
3. Pull the locking button on the shift lever outwards, till the locking button exposes the slot without returning, otherwise the jaw in the knob cannot be embedded into the hole of the lifting lever on the shifter.
4. Locate the knob and sleeve to the shift lever of the shifter.
5. Press the knob into the shift lever second groove in place, and tighten the clamp.
6. Press the locking button, and check whether the locking button can return freely; if does, it indicates that the fit between the knob and lifting lever is correct.
7. Embed the sleeve into the center console the gear display panel.
8. Fix the central pillar upper trim panel on the central pillar, fit 2 screws, tighten it to **3–5Nm**, and check the torque.
9. Fit the both left and right sides A/C control panel bolt trim panel.
10. Connect the battery negative cable.

www.cargeek.ir

Shift Lever Assembly

Remove

1. Move the shift lever in P position.
2. Disconnect the battery negative cable.
3. Remove the shift lever knob.

Shift Lever Knob and Sleeve Assembly Remove

4. Remove the center console assembly.

Center Console Remove

5. Disconnect the gear shift cable at the tail end of gear shift control mechanism.
6. Disconnect the shift control mechanism connector.
7. Remove 4 nuts fixing the gear shift control mechanism to the central passage.

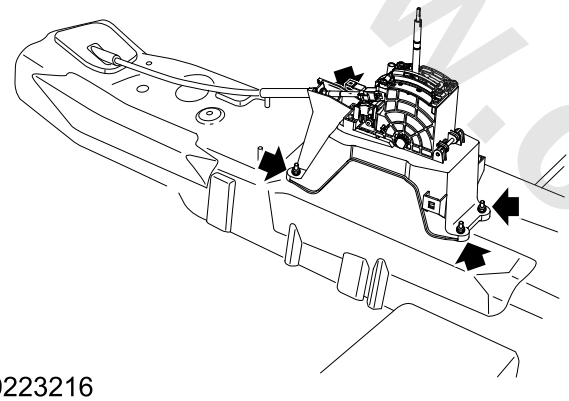

S9223216

8. Remove the gear shift control mechanism.

Refit

1. Locate the gear shift control mechanism to the central passage.
2. Fix the shift control mechanism to the central passage, fit 4 nuts, tighten to **19–25Nm**, and check the torque.
3. Connect the shift control mechanism connector.
4. Fit the shift cable to the shift control mechanism.
5. If cable adjustment is required, first ensure that the transmission shift lever and shift rocker arm are in the P position, push the clip backward (1), push the stop block upward (2), adjust the gear selection cable to an appropriate length, then thoroughly press down the stop block (3), push the clip forward (4) to clamp the gear selection cable joint.

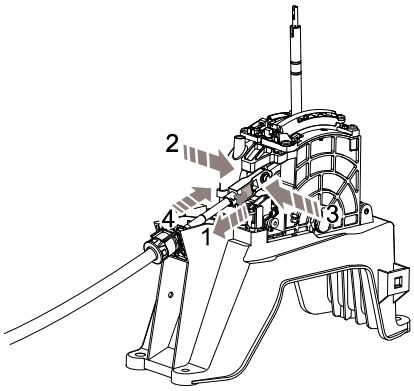

S9223217

6. Fit the center console assembly.

Center Console Assembly Refit

7. Fit the shift lever knob and sleeve assembly.

Shift Lever Knob and Sleeve Assembly Refit

8. Connect the battery negative cable.

www.cargeek.ir

www.cargeek.ir

Gear Panel

Remove

1. Disconnect the battery negative cable.
2. Remove the both left and right sides A/C control panel bolt trim panel.
3. Remove 2 screws fixing the central pillar upper trim panel to the central pillar.
4. Pry up the center console upper trim panel.

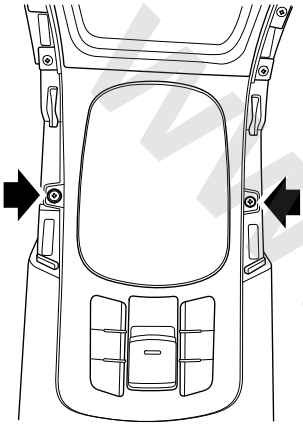

S9223101

5. Remove the sleeve from the gear display panel.
6. Disconnect the trim panel rear connector on the center console and remove the center console trim panel.
7. Remove 4 screws fixing the sleeve to the upper trim panel.

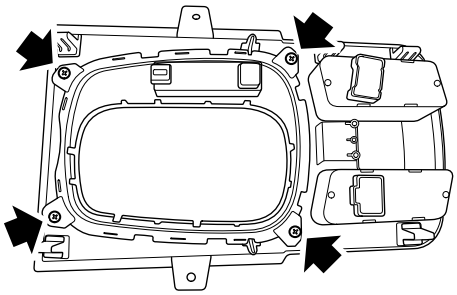

S9223107

8. Remove the gear display panel from the gear indicator.

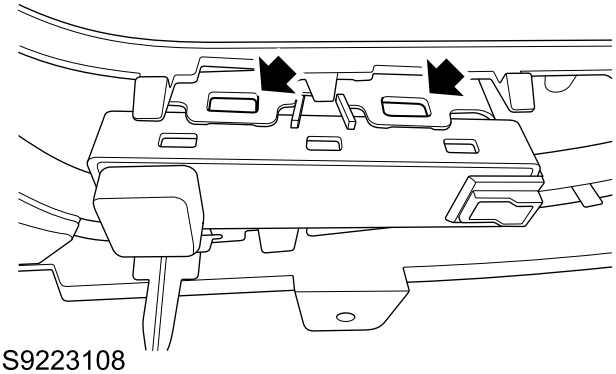

S9223108

Refit

1. Embed the gear indicator into the gear display panel.
2. Fix the central pillar upper trim panel on the central pillar, fit 4 screws, tighten to **3–5Nm**, and check the torque.
3. Connect the trim panel rear connector on the center console .
4. Embed the sleeve into the center console the gear display panel.
5. Fix the central pillar upper trim panel on the central pillar, fit 2 screws, tighten to **3–5Nm**, and check the torque.
6. Fit the both left and right sides A/C control panel bolt trim panel.
7. Connect the battery negative cable.

www.cargeek.ir

www.cargeek.ir

Gear Cable

Remove

1. Move the shift lever in P position.
2. Disconnect the battery negative cable.
3. Remove the battery box bracket.

Battery Box Bracket Remove

4. Loosen the cable ball joint (1) from the gear selection/shift rocker arm, and loosen the C-shaped clip (2) fixing the gear selection/shift cable to the cable bracket.

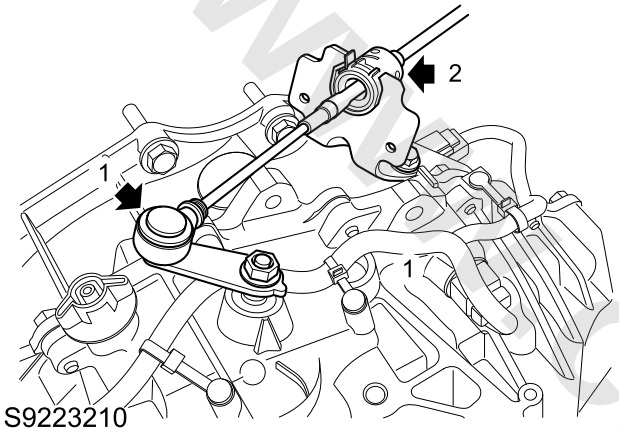

S9223210

5. Remove the center console assembly.

Center Console Assembly Remove

6. Disconnect the gear shift cable at the tail end of gear shift control mechanism.
7. Remove 2 bolts fixing the gear shift cable to the body floor.

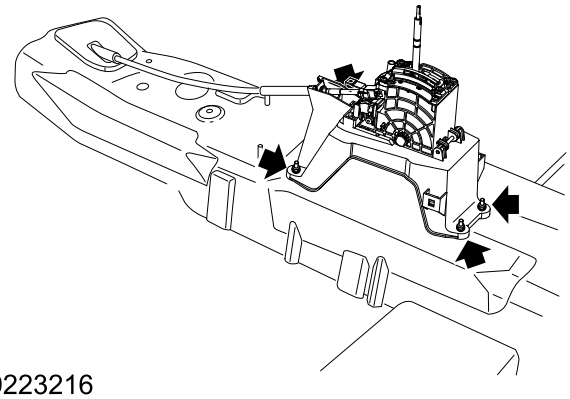

S9223216

8. Remove the gear shift cable from the vehicle.

Refit

1. Fix the gear shift cable to the jumper shifter cable bracket on the automatic transmission with C-shaped clips.

Caution: During clip installation, avoid pressure from hand or tool to the nylon glove of cable, and check if the nylon glove break off or not after installation.

2. Embed cable ball joint into the shift rocker arm.
3. Fix the shift cable to the body floor, fit 2 bolts, tighten to **12–15Nm**, and check the torque.
4. Fit the shift cable to the shift control mechanism.
5. If cable adjustment is required, first ensure that the transmission shift lever and shift rocker arm are in the P position, push the clip backward (1), push the stop block upward (2), adjust the gear selection cable to an appropriate length, then thoroughly press down the stop block (3), push the clip forward (4) to clamp the gear selection cable joint.

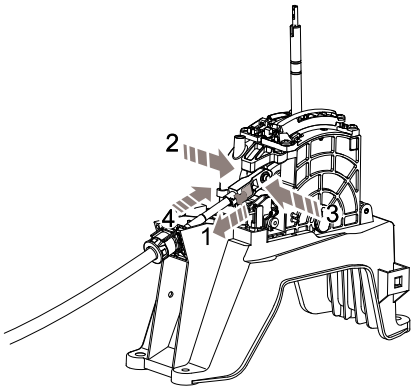

S9223217

6. Fit the center console assembly.

Center Console Assembly Refit

7. Fit the battery bracket.

Battery Box Bracket Refit

8. Connect the battery negative cable.

www.cargeek.ir

www.cargeek.ir

Shift Lock Control-6MT

Description and Operation

System Layout

Exploded View of Gear Shift Control Mechanism

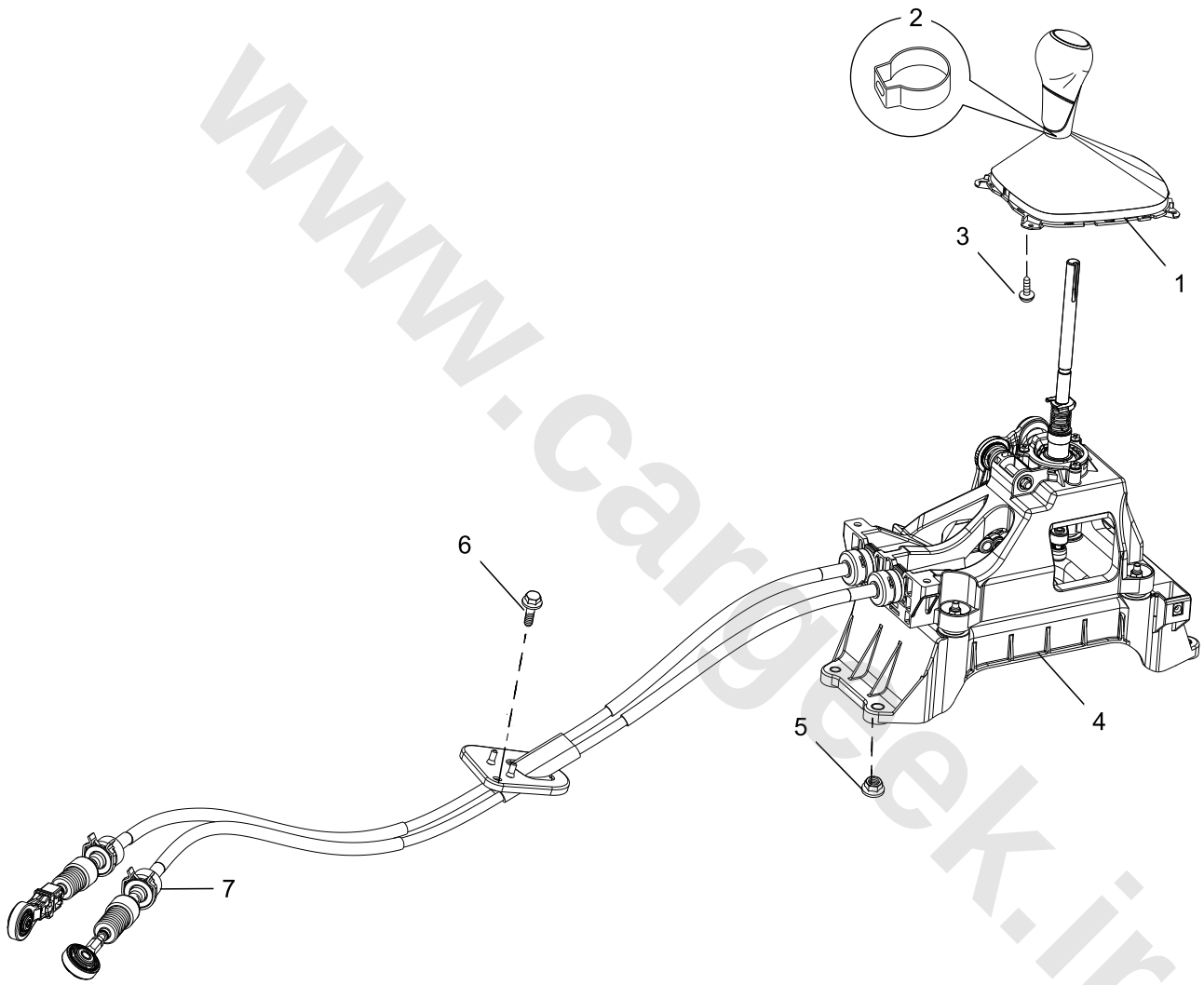

S9220003

1. Shift Lever Knob Handle and Sleeve Assembly
2. Clip - Shift Lever Knob Handle
3. Screw - Sleeve Assembly
4. Manual Shift Control Mechanism and Gear Selection/Shift Cable
5. Nut - Shift Mechanism to Central Passage
6. Bolt - Gear Selection/Shift Cable to Body
7. Clip - Gear Selection/Shift Cable

www.cargeek.ir

www.cargeek.ir

Service Procedures

Shift Lever Ball Head and Sleeve Assembly-Manual

Remove

1. Disconnect the battery negative cable.
2. Remove the both left and right sides A/C control panel bolt trim panel.
3. Remove 2 screws fixing the central pillar upper trim panel to the central pillar.

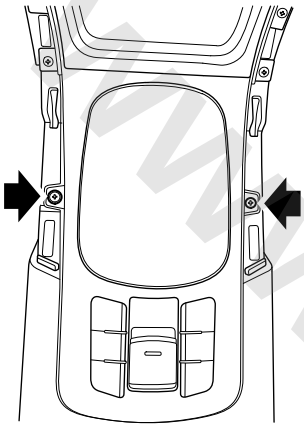

S9223101

4. Pry up the center console upper trim panel.
5. Remove 4 screws fixing the sleeve to the upper trim panel.
6. Loosen the metal clamp on the knob.

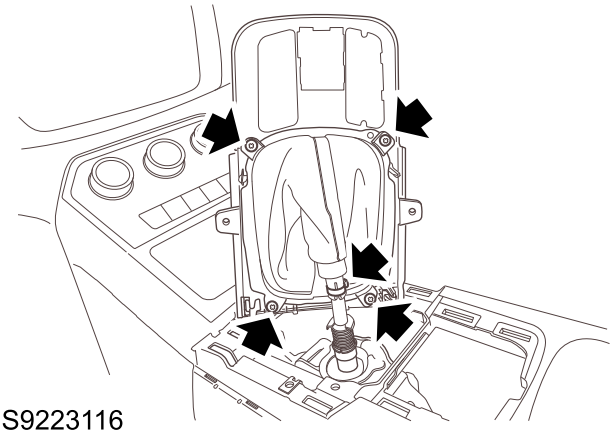

S9223116

7. Pull up the shift lever knob with care, and remove the knob and sleeve from the shift lever.

Refit

1. Locate the trim ring to the knob, and screw the knob into sleeve.
2. Locate a new metal clamp to the knob.
3. Locate the knob and sleeve to the shift lever of the shifter.
4. Press the knob into the shift lever second groove in place, and tighten the clamp.
5. Insert the sleeve on the central pillar, fit 4 screws, tighten to **0.6–1Nm**, and check the torque.
6. Secure the central pillar upper trim panel on the central pillar, fit 2 screws, tighten to **3–5Nm**, and check the torque.
7. Fit the both left and right sides A/C control panel bolt trim panel.
8. Connect the battery negative cable.

www.cargeek.ir

www.cargeek.ir

Shift Lever Assembly - Manual

Remove

1. Remove the battery box bracket.

Battery Box Bracket Remove

2. Remove the shift lever knob and sleeve assembly.

Shift Lever Knob and Sleeve Assembly Remove

3. Remove the center console assembly.

Center Console Assembly Remove

4. Locate the shift lever knob to 1st/2nd gear middle position.
5. Align with the control lid and gear selection rocker arm hole, insert the 1st/2nd gear lock pin of the transmission (or use a Φ5mm elastic pin puncher), so as to ensure the relative position between the gear position of the shift control device and that of the transmission control mechanism is fixed.

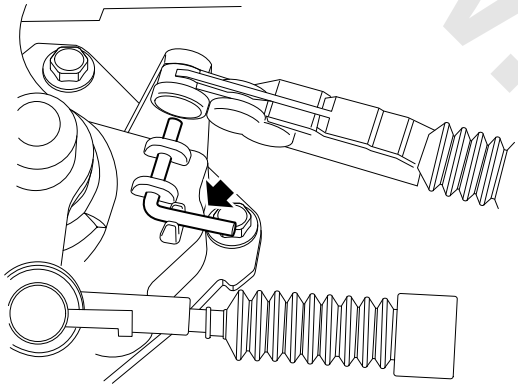

S9220013

6. Align with the holes on the control mechanism device and control lever, insert the 1st/2nd gear lock pin of the control mechanism (or use a Φ5mm elastic pin puncher), so as to ensure the relative position between the gear position of the shift control mechanism device and that of the transmission control mechanism is fixed.

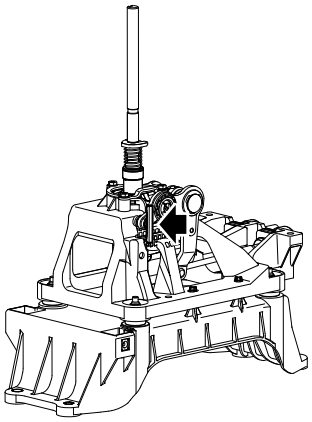

S9223215

7. Remove 4 nuts fixing the shift mechanism assembly to the body.
8. Loosen 2 bolts fixing the cable to the body.
9. Loosen the cable ball joint (1) from the gear selection/shift rocker arm, and loosen the clip (2) fixing the gear selection/shift cable to the cable bracket.

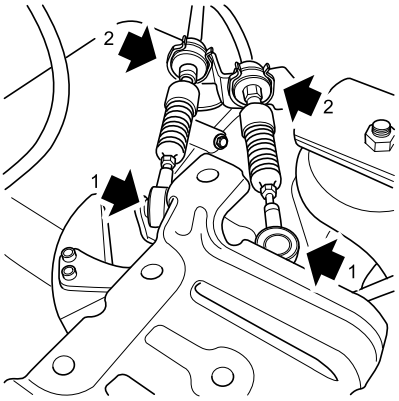

S1220149

10. Remove the gear shift control mechanism assembly.

Refit

1. Locate the gear shift mechanism assembly to the body, fit nuts and tighten to **19–25Nm**.
2. Refit 2 bolts fixing the cable to the body and tighten to **10–15Nm**.
3. Retain the gear selection/shift cable to the cable bracket with clamps.
4. Make sure that the gear selection cable is in free state (firstly push the top clip backward (1), then press the block down) , connect the cable joint ball to the gear selection/shift rocker arm.

Caution: During clip installation, avoid pressure from hand or tool to the nylon glove of cable, and check if the nylon glove break off or not after installation.

5. After adjusting the gear selection cable to a proper length, firstly push the stop dog to the bottom (2), then press the block down to the end, finally push the clip forward (3), thus the gear selection cable joint is fastened.

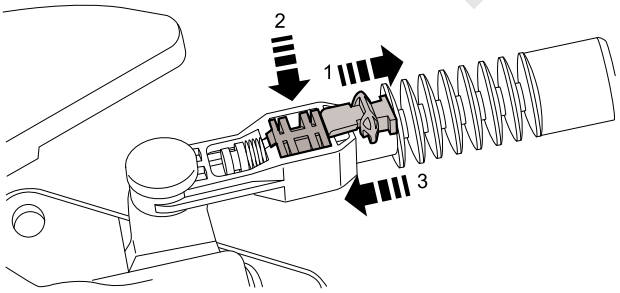

S9220014

6. After the gear selection/shift cable is fitted, pull out the 1st/2nd gear lock pin of the transmission.
7. Pull out the 1st/2nd gear lock pin of the gear shift mechanism assembly.

www.cargeek.ir

www.cargeek.ir

8. Fit the center console assembly.

☞ **Center Console Assembly Refit**

9. Fit the shift lever knob and sleeve assembly.

☞ **Shift Lever Knob and Sleeve Assembly Refit**

10. Fit the battery box bracket.

☞ **Battery Box Bracket Refit**

www.cargeek.ir

www.cargeek.ir

www.cargeek.ir

Twin-Clutch Sportronic Transmission-6 Speed

Specifications

Torque

Description	Value
Bolt - engine lifting eye	22–28Nm
Bolt - transmission bracket to transmission	55–65Nm
Bolt - transmission to engine	75–90Nm
Bolt - flywheel to flywheel connecting plate	28–32Nm
-	
Nut - transmission bracket to transmission mounting	90–110Nm
Bolt - coolant outlet tube to twin clutch sportronic transmission	7–10Nm
clamp- clamp to twin clutch sportronic transmission	7–10Nm
Bolt - TCM assembly to TCM bracket	7–10Nm
Bolt - TCM bracket to body	19–25Nm
Drain plug-transmission	57–63Nm
Check plug-transmission	57–63Nm
Filler plug-transmission	57–63Nm
Pressure filter cover	38–42Nm
Bolt - park rocker arm to transmission	38–42Nm
Bolt - park rocker arm to rocker	19–21Nm

www.cargeek.ir

www.cargeek.ir

www.cargeek.ir

Parameters

Type	6-speed Wet Type Dual Clutch Automatic Transmission	
Gear	6 forward gears and 1 reverse gear (all gears are engaged by the synchronizer)	
Speed Ratio	2WD	AWD
1	3.25	
2	1.88	
3	1.206	
4	0.897	
5	1.029	
6	0.795	
R	4.434	
Final Drive 1	4.278	
Final Drive 2	2.852	
Overall length	358.55mm	
Centre Distance	197mm	
Differential Head	72mm	
Maximum Input Torque	360Nm	
Maximum Input Rotation Speed	6800rpm	
Total Mass	87.9kg	88.7kg

www.cargeek.ir

www.cargeek.ir

www.cargeek.ir

Description and Operation

System Layout

Dual Clutch Automatic Transmission Assembly - 2WD

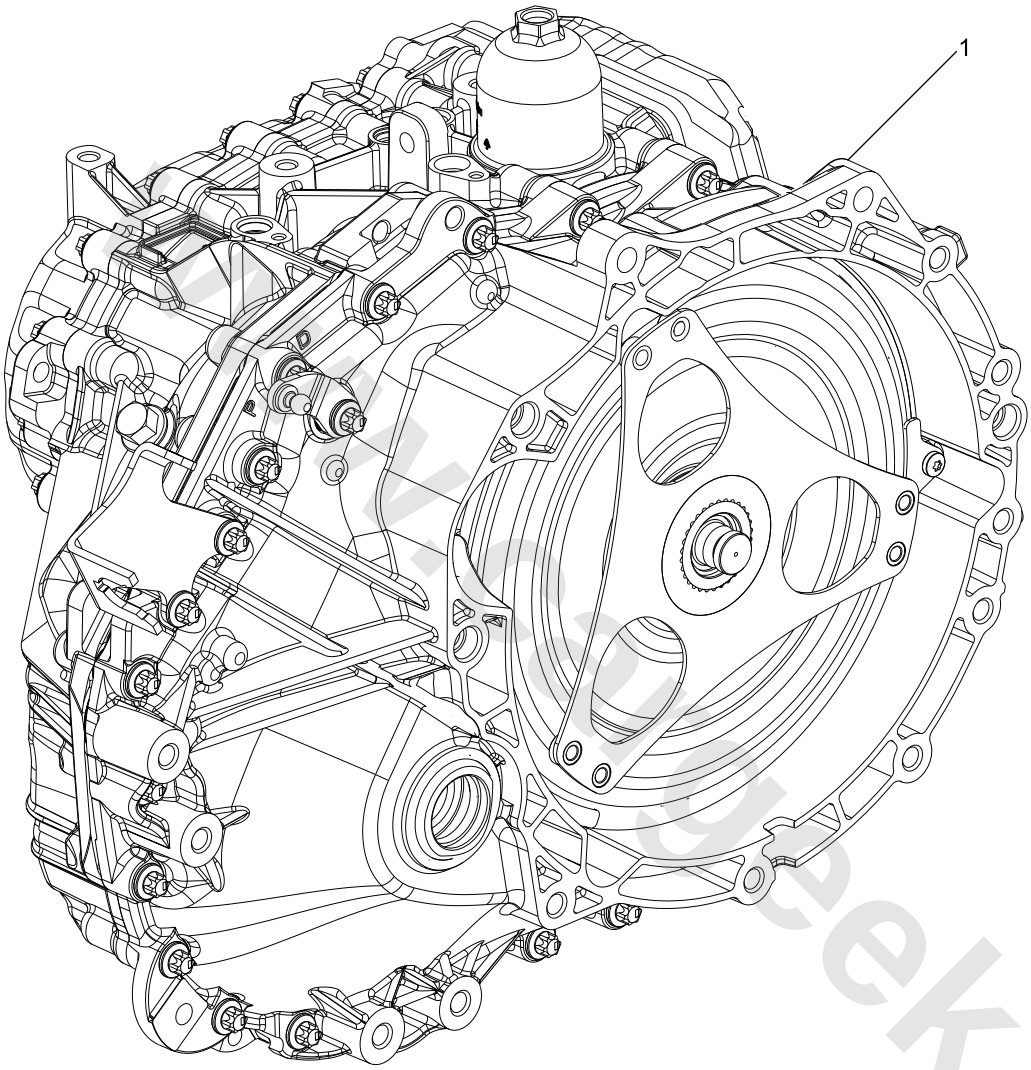

S1210100

1. Dual Clutch Automatic Transmission - 2WD

www.cargeek.ir

www.cargeek.ir

Dual Clutch Automatic Transmission Assembly - AWD

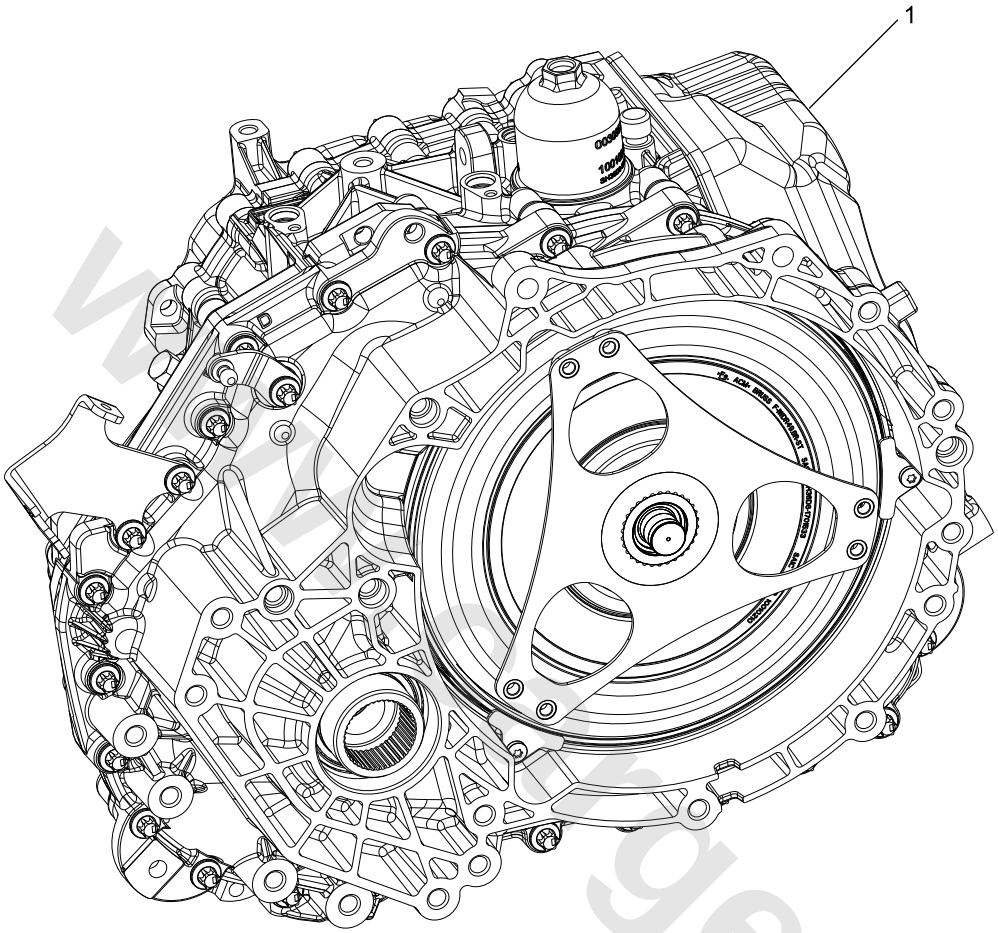

S1210101

1. Dual Clutch Automatic Transmission - AWD

www.cargeek.ir

www.cargeek.ir

Dual Clutch Automatic Transmission Accessory Layout - 2WD

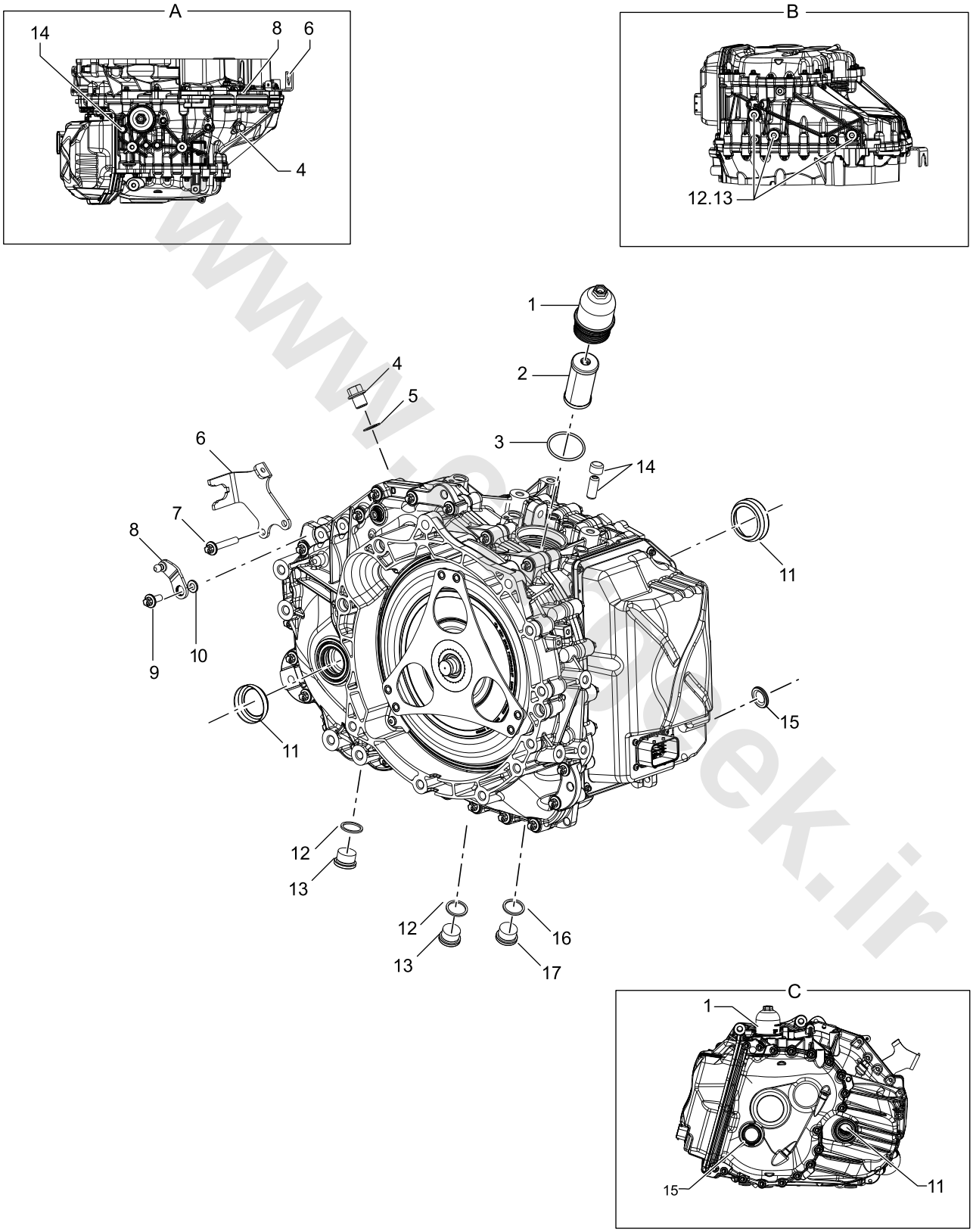

S1210102

1. Pressure Filter Cover
2. Pressure Filter Element
3. O Ring - Pressure Filter
4. Oil Filler Plug

www.cargeek.ir

5. Gasket - Oil Filler Plug
6. Parking Brake Cable Bracket
7. Bolt - Parking Brake Cable Bracket
8. Parking Brake Cable Shaft Rocker Arm
9. Bolt - Parking Brake Cable Shaft
10. Shift Shaft Oil Seal
11. Axle Shaft Oil Seal
12. Gasket - Drain Plug
13. Drain Plug
14. Vent Plug Cap
15. R Gear Shaft Seal Cover
16. Gasket - Oil Level Plug
17. Oil Level Plug

www.cargeek.ir

www.cargeek.ir

www.cargeek.ir

Dual Clutch Automatic Transmission Accessory Layout - AWD

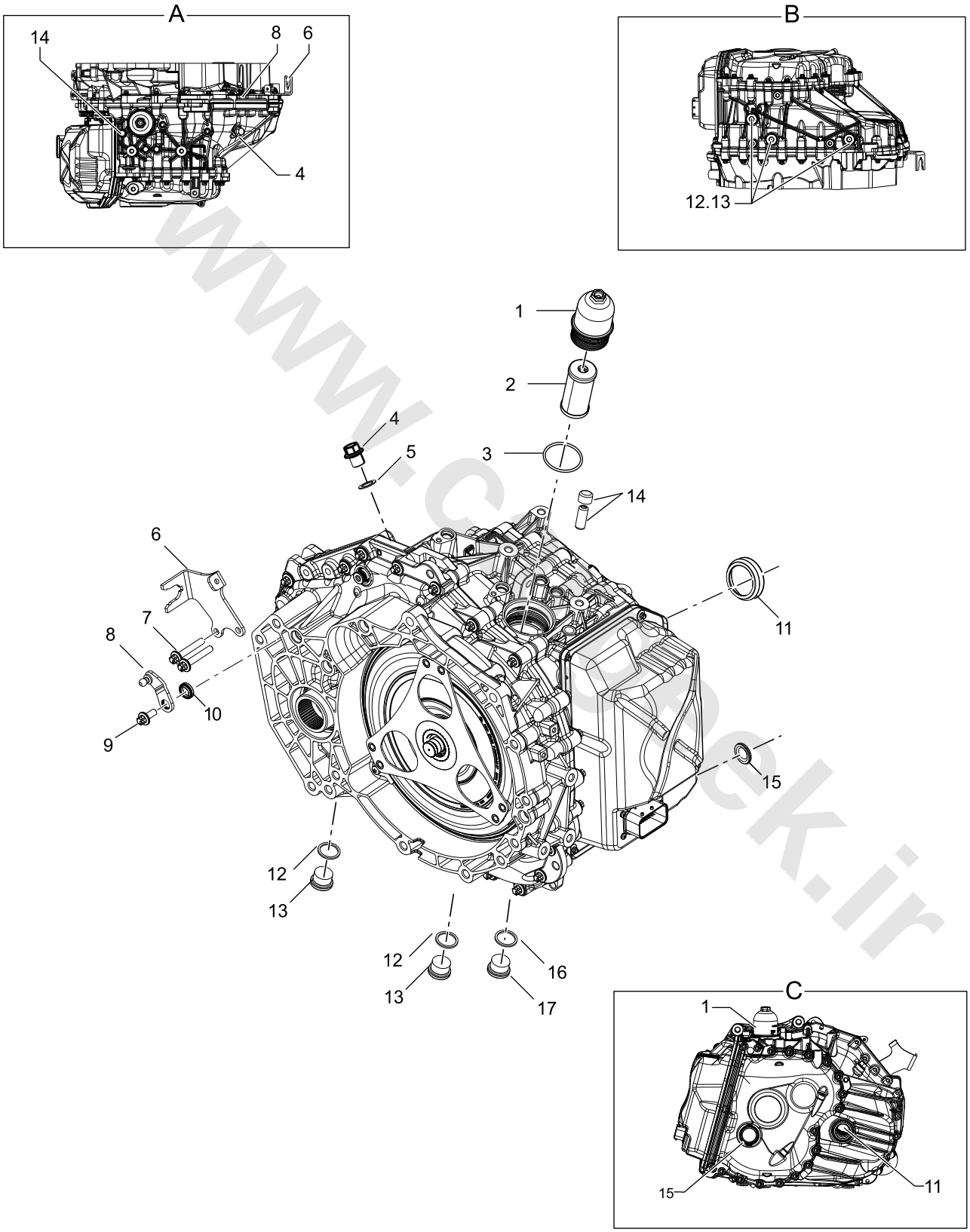

S1210103

1. Pressure Filter Cover
2. Pressure Filter Element
3. O Ring - Pressure Filter
4. Oil Filler Plug

www.cargeek.ir

5. Gasket - Oil Filler Plug
6. Parking Brake Cable Bracket
7. Bolt - Parking Brake Cable Bracket
8. Parking Brake Cable Shaft Rocker Arm
9. Bolt - Parking Brake Cable Shaft
10. Shift Shaft Oil Seal
11. Axle Shaft Oil Seal
12. Gasket - Drain Plug
13. Drain Plug
14. Vent Plug Cap
15. R Gear Shaft Seal Cover
16. Gasket - Oil Level Plug
17. Oil Level Plug

www.cargeek.ir

www.cargeek.ir

www.cargeek.ir

Dual Clutch Automatic Transmission Gear Shaft Layout

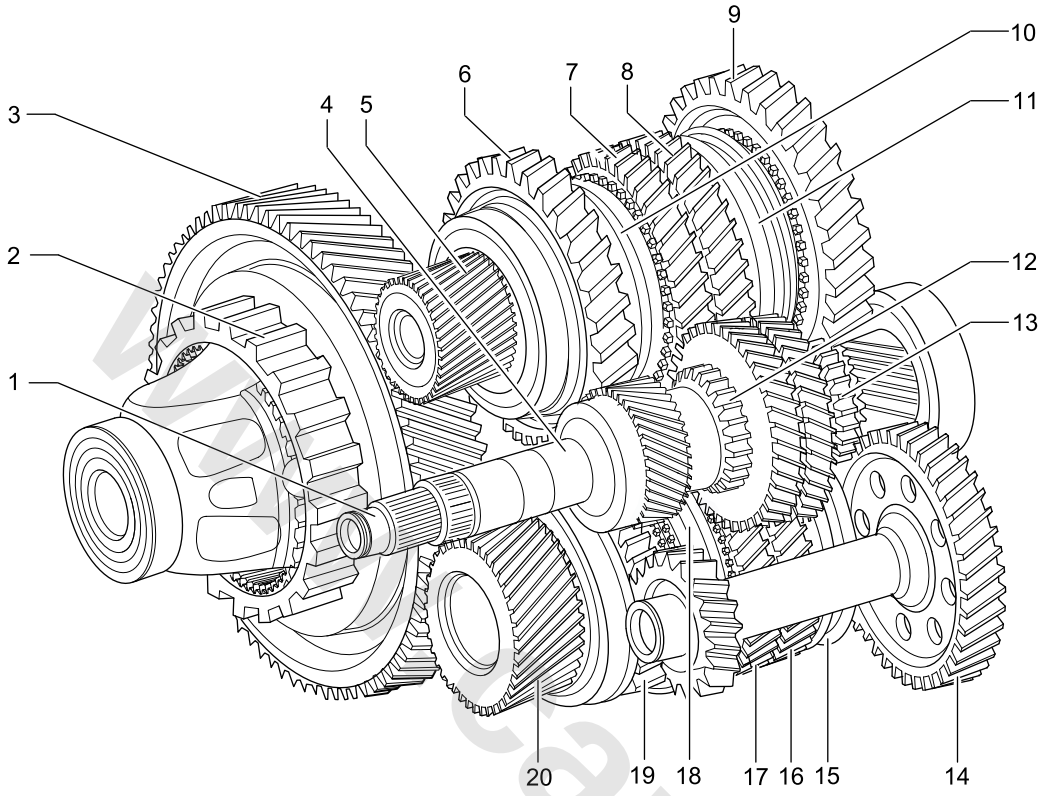

1. Inner Input Shaft
2. Parking Gear (integrated in the differential housing)
3. Differential
4. Outer Input Shaft
5. 1234 Output Shaft
6. 2nd Gear Driven Gear Assembly
7. 4th Gear Driven Gear Assembly
8. 3rd Gear Driven Gear Assembly
9. 1st Gear Driven Gear Assembly
10. 2nd/4th Gear Synchronizer Assembly
11. 1st/3rd Gear Synchronizer Assembly
12. Outer Input Shaft Speed Signal Wheel
13. Inner Input Shaft Speed Signal Wheel
14. Reverse Gear Shaft
15. 5th Gear Synchronizer Assembly
16. Output Shaft 5th Gear Assembly
17. Output Shaft 6th Gear Assembly
18. 6th/Reverse Gear Synchronizer Assembly
19. R Gear Driven Gear Assembly
20. 56R Output Shaft

www.cargeek.ir

Differential Assembly Exploded View

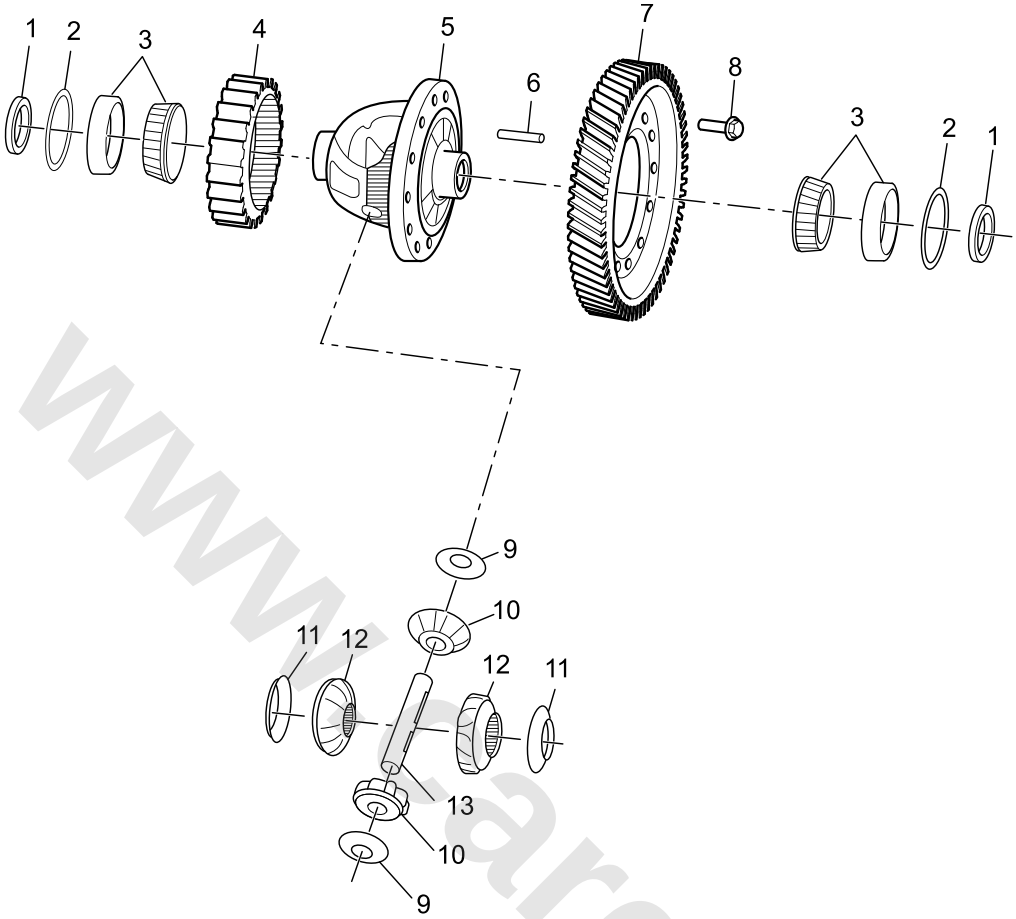

1. Axle Shaft Oil Seal
2. Gasket - Differential
3. Tapered Bearing
4. Parking Gear
5. Differential Housing
6. Planetary Shaft Pin
7. Final Drive Driven Gear
8. Bolt - Differential Housing to Final Drive Driven Gear
9. Planetary Gear Gasket
10. Planetary Gear
11. Axle Shaft Gear Shim
12. Axle Shaft Gear
13. Planet Gear Shaft

www.cargeek.ir

www.cargeek.ir

System Control Diagram

Dual Clutch Automatic Transmission TCM Control Diagram

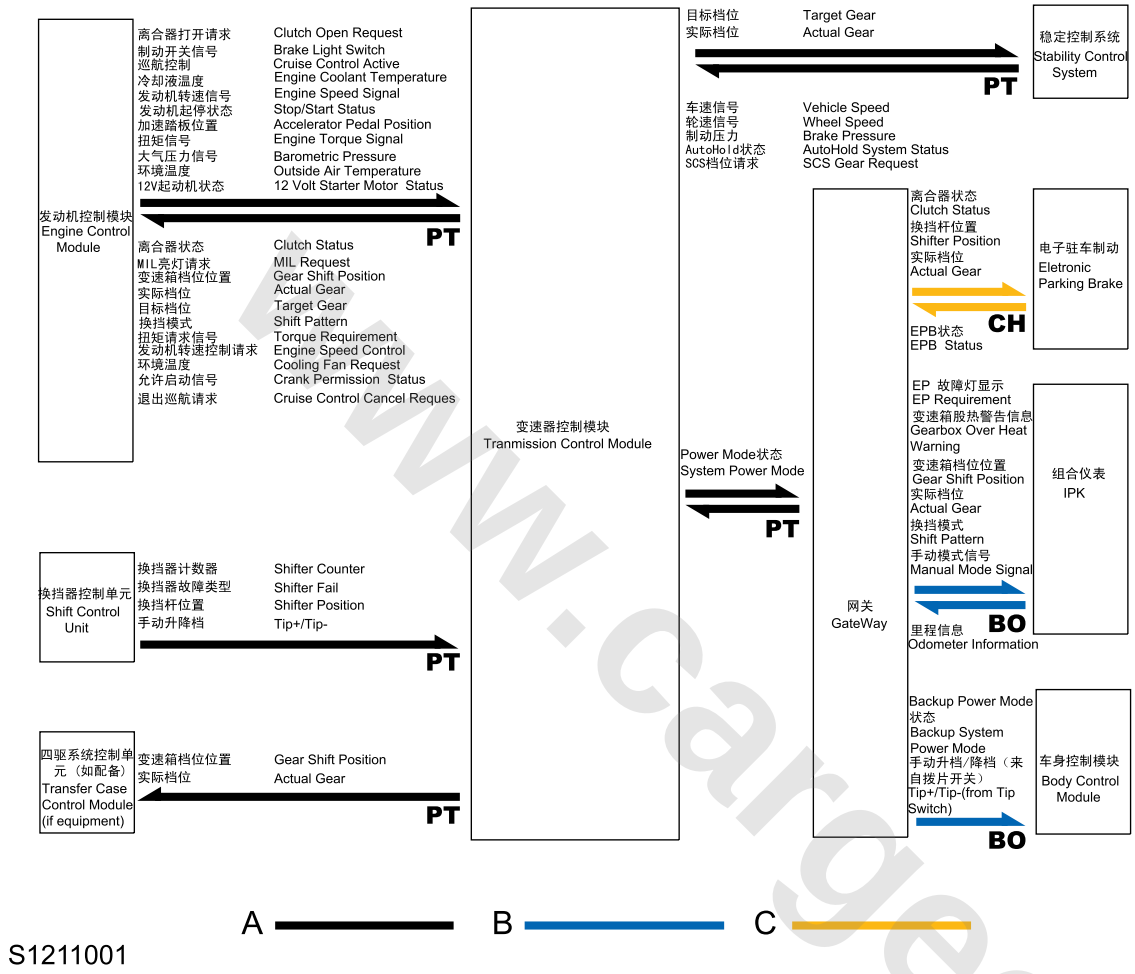

A = Power HS CAN Bus; B = Body HS CAN Bus; C = Chassis HS CAN Bus

www.cargeek.ir

www.cargeek.ir

Hydraulic Control System

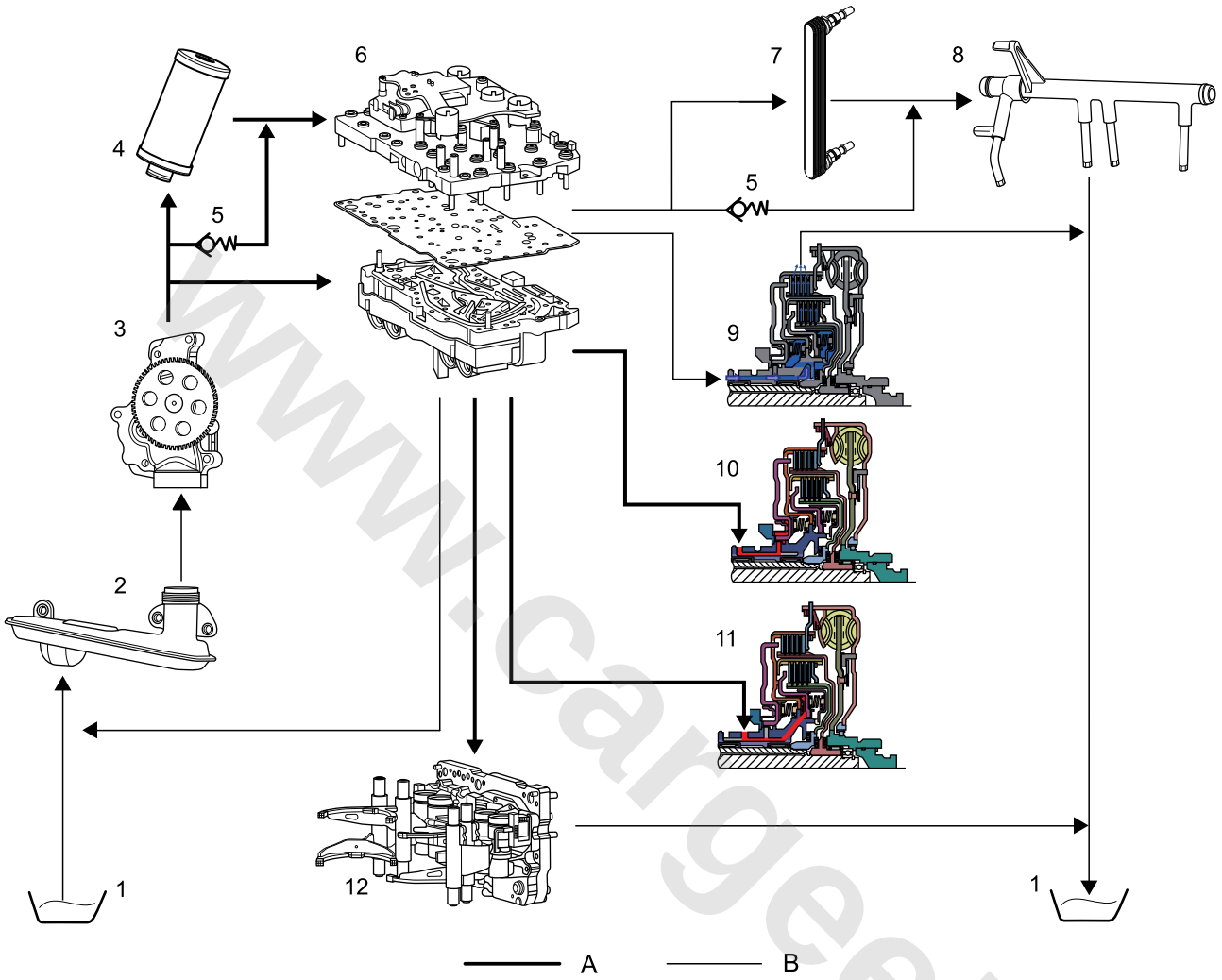

A= High Pressure Oil Circuit; B= Low Pressure Oil Circuit

1. Oil Pan
2. Suction Filter Assembly
3. Oil Pump
4. Pressure Filter
5. Check Valve
6. Hydraulic Control Module Assembly
7. Transmission Oil Cooler (integrated in the left collecting pipe of radiator)
8. Fuel Injection Pipe (gear lubrication and cooling)
9. Dual Clutch Cooling
10. Pressure to Outer (Odd) Clutch
11. Pressure to Inner (Even) Clutch
12. Gear Control

www.cargeek.ir

www.cargeek.ir

Dual Clutch Automatic Transmission Solenoid Valve, Sensor Control Diagram

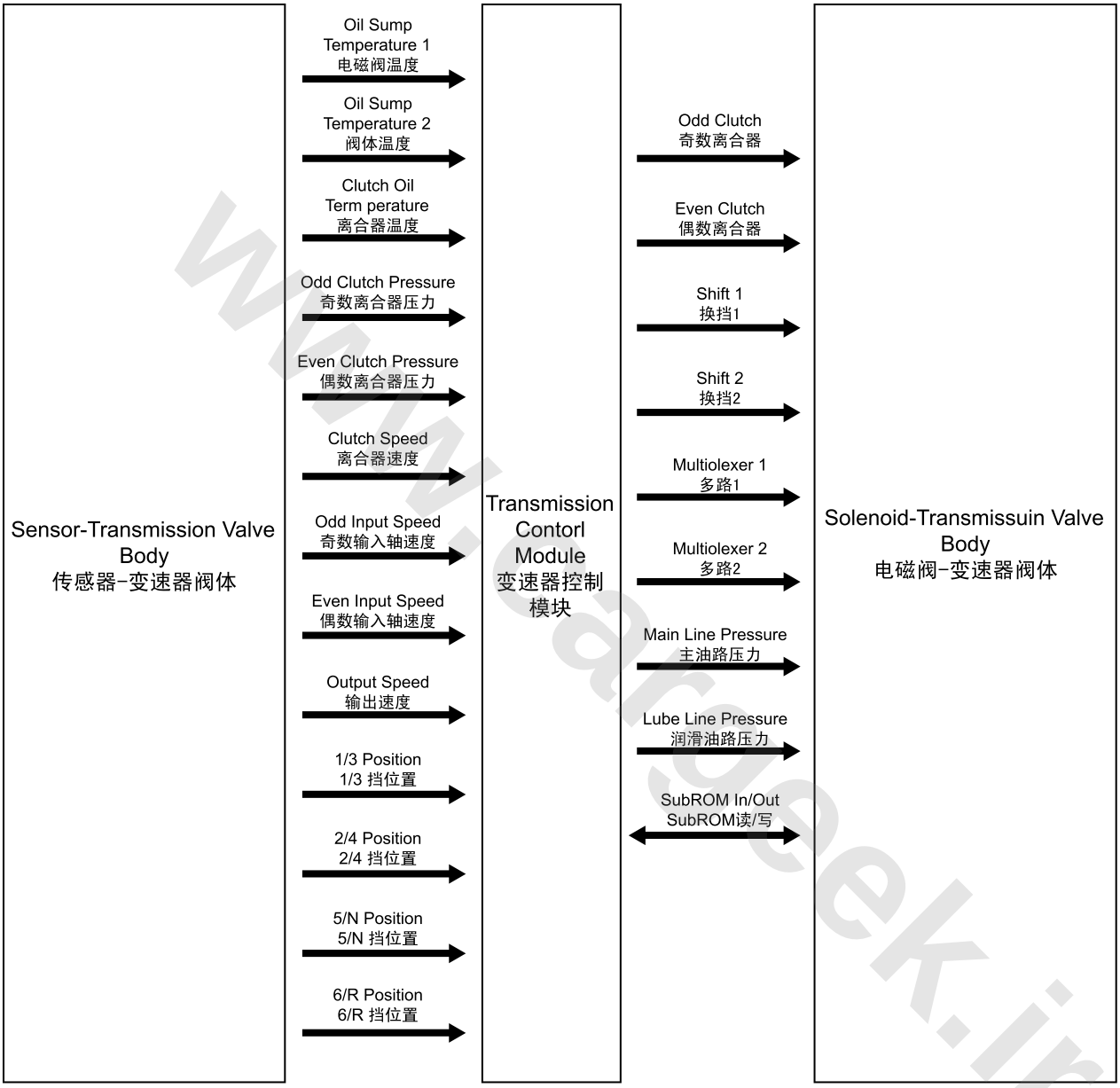

A= 硬线

www.cargeek.ir

www.cargeek.ir

Description

Overview

The vehicle is equipped with 6-speed wet dual clutch automatic transmission which possesses the high transmission efficiency and durability of a manual transmission and the comfortability of an automatic transmission that will not show interruption of traction during shifting.

The **TCM** controls the system in a way similar with that used by other **ECU**s equipped on the vehicle. It receives information from the sensors or other control modules, calculate according to the pulse spectrum information stored in **TCM** memory, and then outputs signals to the actuators or other **ECU**. The signal exchange with other control modules is mainly conducted through the high-speed **CAN** bus. The diagnostic test can be conducted through the Data Link Connector (DLC). When the transmission has some faults, **TCM** will store related diagnostic trouble codes (**DTC**), and these DTCs may be accessed again by using the scan tool.

Transmission Housing

The transmission housing assembly consists of the clutch housing, main housing and end cap. The transmission housing is made of cast aluminum, and the transmission assembly is connected to the engine by bolts.

Dual Clutch and Shock Absorber Assembly

The dual clutch and shock absorber assembly contains 2 parts: dual clutch module and torsional shock absorber.

The dual clutch module consists of 2 wet-type multi-plate friction clutches, its operation principle is as follows:

Even gears are deployed on one part of the transmission, which odd gears are deployed on another part of the transmission. Before the gear shifting, the next gear is already locked on the unloaded part of the transmission (pre-selected gear). Then, the clutch of pre-selected gear is engaged, meanwhile the clutch of loaded gear is disengaged, so as to complete the torque transfer.

The torque is inputted to the clutch from the flywheel, and the torque in the clutch is introduced from the external friction plate bracket, and applied to the internal plate clutch by the engagement of the clutch, then transmitted to the corresponding input shaft. One of the clutch always works in the force transmission chain.

Clutch Release State

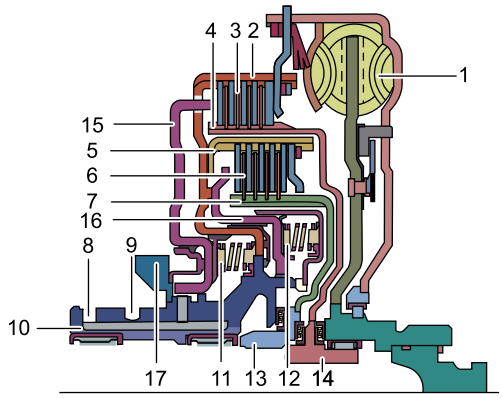

1. Torsional vibration damper
2. C1 External Plate Bracket
3. External (Odd) Clutch C1
4. C1 Internal Plate Bracket
5. C2 External Plate Bracket
6. Internal (Even) Clutch C2
7. C2 Internal Plate Bracket
8. C1 Pressure Oil Cavity
9. C2 Pressure Oil Cavity
10. Pressure Oil Cavity for Lubricating Oil
11. C1 Return Spring
12. C2 Return Spring
13. Connecting External (Even) Input Shaft
14. Connecting Internal (Odd) Input Shaft
15. C1 Piston
16. C2 Piston
17. Oil Pump Drive Wheel

External (Odd) Clutch Engaged State and Torque Transfer

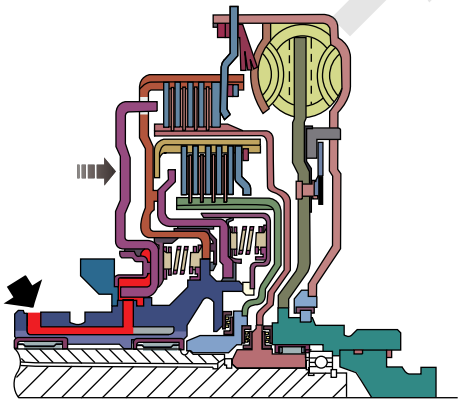

External clutch transfers the torque to the internal input shaft connecting with 1st, 3rd, 5th and reverse gear. When the external clutch is engaged, the hydraulic oil will fill into the oil

www.cargeek.ir

www.cargeek.ir

cavity of the external clutch through the 1st oil inlet duct, push the piston to have the friction plates on the external clutch compressed together.

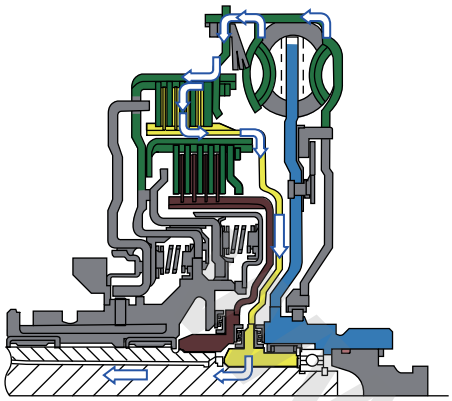

The torque is transferred to the internal input shaft through the friction plate bracket. After the clutch is disengaged, the return spring will push the piston back to its original position.

Internal (Even) Clutch Engaged State and Torque Transfer

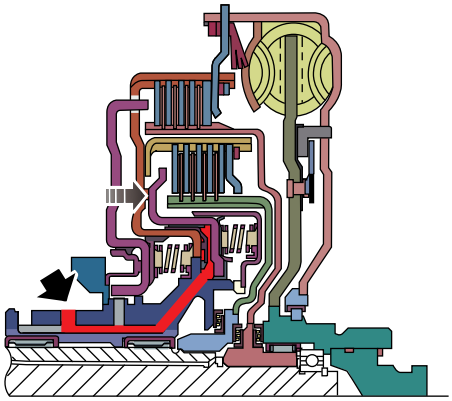

Internal clutch transfers the torque to the external input shaft connecting with 2nd, 4th, and 6th gear. When the internal clutch is engaged, the hydraulic oil will fill into the oil cavity of the internal clutch through the 2nd oil inlet duct, push the piston to have the friction plates on the internal clutch compressed together.

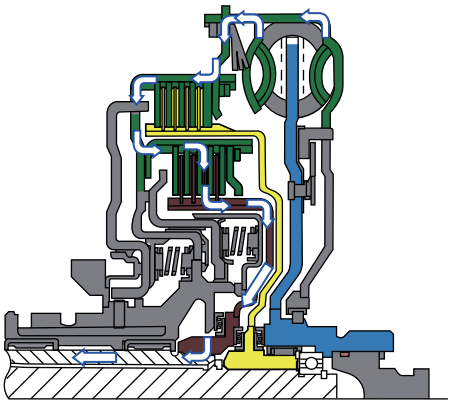

The torque is transferred to the external input shaft through the friction plate bracket. After the clutch is disengaged, the return spring will push the piston back to its original position.

Flow Direction of Lubricating Oil in Clutch

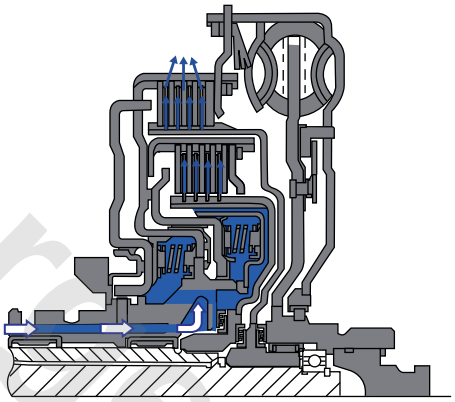

The hydraulic oil fills into the lubricating oil cavity of the clutch through the 3rd oil inlet duct, the optimum lubricating oil distribution is achieved by the oil groove design, the heat generated will be taken away by the lubricating oil flowing through the friction plates of the clutch so as to cool the clutch. Finally, the lubricating oil will flow out through the oil groove.

Torsional vibration damper

The torsional vibration damper module is a rotary mechanical damping system, which is integrated with the dual clutch module, jointly forming the dual clutch and vibration damper assembly.

www.cargeek.ir

Hydraulic Control Module Assembly

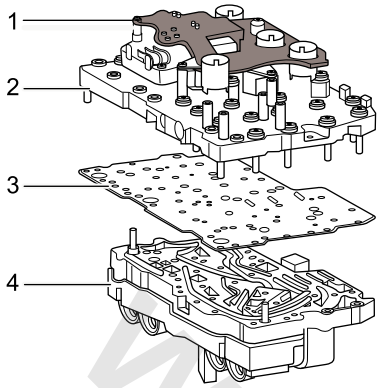

1. Valve Body Circuit Board
2. Solenoid Valve Body
3. Separator/Oil Seal
4. Actuator Valve Body

The hydraulic control module mainly consists of circuit board, solenoid valve body, separator, actuator valve body and solenoid valve etc. Its main function is:

- Control the engagement and separation of the dual clutch
- Control the gear selection of the transmission
- Provide cooling and lubrication for the transmission gear shaft system and dual clutch

Main Technical Parameters:

- System operating temperature: -40 ~ 140°C;

Lubricating Oil

The operating temperature of the transmission fluid is around 70 ~ 110°C. In addition to lubrication, cooling and cleaning, the main function of the transmission fluid is to control the dual clutch and valve body through internal fluid pressure, therefore, the transmission fluid of high quality shall be used, and the fluid shall be clean.

Differential

The differential retains the final drive driven gear to the differential housing with bolts, and the planetary shaft pin, planetary gear and half axle gear are supported by the differential housing. The differential assembly is supported by bearings in the transmission housing. Parking gear is integrated in the differential. The differential allows the wheels to rotate at different speed when the output torque are the same. The pinion integrated with the output shaft is engaged with the final drive driven gear of the differential assembly. When the output shaft rotates, and the wheels swivel straight forward, the torque will be applied to the whole assembly, and the planetary gear does not rotate. The torque is transmitted to the wheels through drive shaft. When the vehicle takes a turn, the inner wheel will pass a shorter distance at a lower speed. This drives the planetary gear to rotate, and the outer sun gear offers a higher speed for outer wheels. Two driven shafts transfer the torque to the differential, and the differential transfers the torque to the wheels through the half axle.

Parking Mechanism

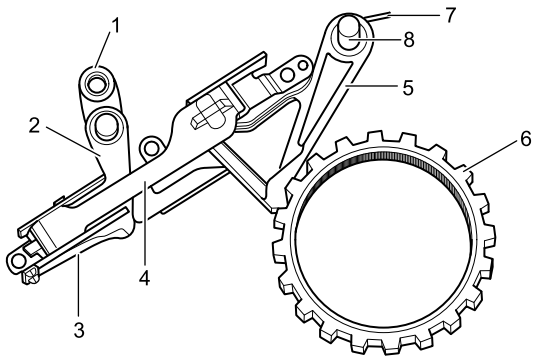

1. Parking Brake Cable Shaft Rocker Arm
2. Rocker Arm
3. Locating Spring
4. Guide Plate
5. Brake Pawl
6. Parking Gear
7. Pawl Return Spring
8. Pawl Rotating Shaft

Parking gear is fitted on the differential for reliable parking and avoiding the occurrence of unnecessary rolling when the parking brake is not applied.

The operating principle of the parking mechanism is as follows: when the shift lever is moved to P position, the parking brake cable shaft rocker arm drives the main guide plate through the lever to move along a straight line, and the main guide plate drives the pawl rolling through the roller to have the pawl engaged with or separate from the parking gear, so as to achieve the purpose of locking or unlocking.

www.cargeek.ir

www.cargeek.ir

Gear Shaft System

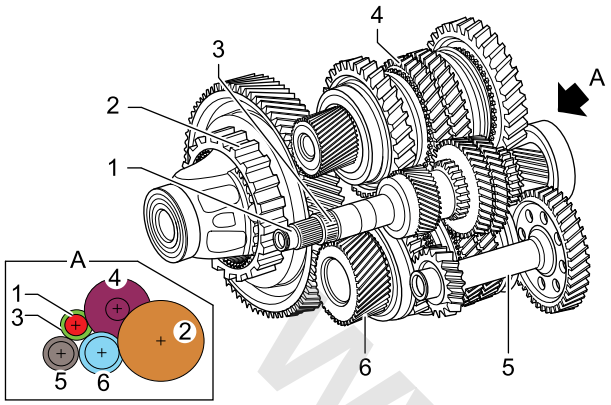

1. Internal (Odd) Input Shaft
2. Differential
3. External (Even) Input Shaft
4. 1234 Output Shaft
5. Reverse Gear Shaft
6. 56R Output Shaft

Input shaft

The input shafts include internal (odd) input shaft and external (even) input shaft, they are supported by bearing on the transmission housing. Among them, the solid one is the internal input shaft, which is connected to 1st, 3rd, 5th and reverse gear; and the hollow one is the external input shaft, which is connected to 2nd, 4th and 6th gear. The internal (odd) input shaft is connected to the external (odd) clutch, and the external (even) input shaft is connected to the internal (even) clutch, both of them transmit the torque from the dual clutch module to the driven gear.

Output shaft

There are 2 output shafts corresponding to the internal and external input shafts, which is 1234 output shaft and 56R output shaft respectively. Two output shafts transmit the torque to the differential through the driven gear.

Reverse Gear Shaft

The reverse gear teeth on the internal input shaft change the rotating direction of the 56R output shaft by the engagement with the idler pulley on the reverse shaft, that is, change the direction of power transmission.

Synchronizer

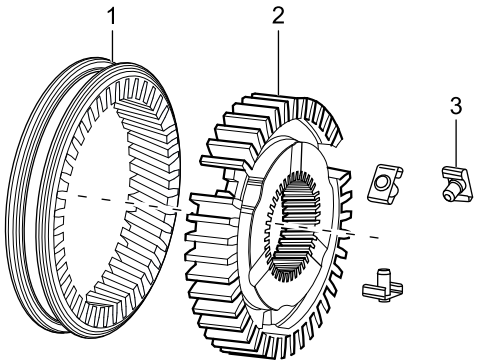

1. Synchronizer Gear Bushing
2. Synchronizer Gear Hub
3. Key Assembly

The Synchronizer consists of 3 parts: gear hub, key assembly and gear bushing.The gear hub is connected to the output shaft through the spline, and rotates together with the output shaft. The key assembly is composed of housing, spring and steel balls. The key assembly is fitted in the gap of the gear hub, under the action of the spring, the steel ball is pressed to the gear bushing and its spherical surface just embeds into the groove of the gear bushing, which plays the role of neutral positioning. The spline teeth inside the gear bushing slides to fit with the spline teeth outside the gear hub, the fork is stuck on the gear bushing, so as to push the gear bushing to make axial movement. After the gear bushing has engaged with the synchronizer ring and driven ring gear, the gear shift process is completed. With the help of synchronizer and synchronizer ring, the impact and noise of engaging gears during the gear shift is reduced, the service lives of the gears are extended, and the gear shift process becomes more smooth.

Synchronizer Ring

Different gears can generate a speed difference during shifting, and the function of a synchronizer ring is to eliminate the speed difference between the shift gear to be engaged and the synchronizer gear sleeve and make the shift more smooth.

www.cargeek.ir

Single Conical Synchronizer Ring

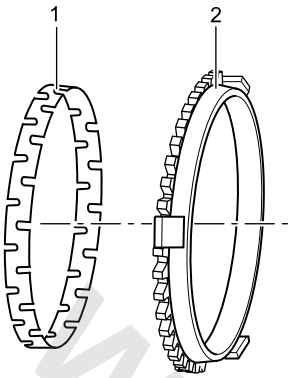

1. Friction Ring
2. Conical Ring

The one that 4th, 5th and 6th gear uses is a single conical synchronizer ring.

Dual Conical Synchronizer Ring

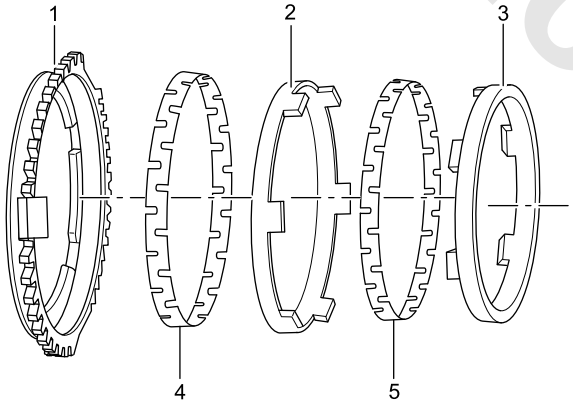

1. Outer Conical Ring
2. Intermediate Ring
3. Inner Conical Ring
4. Outer Friction Ring
5. Intermediate Friction Ring

The 3rd/reverse gear uses a dual conical synchronizer ring.

Triple Conical Synchronizer Ring

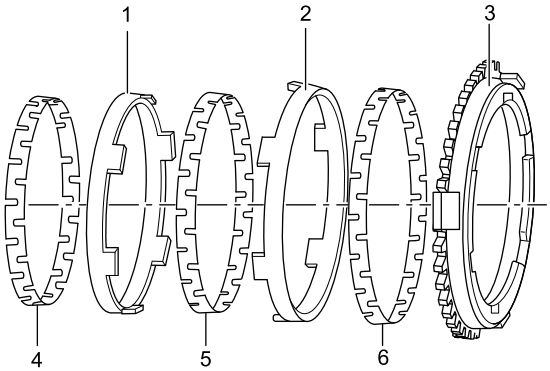

1. Inner Conical Ring
2. Intermediate Ring
3. Outer Conical Ring
4. Inner Friction Ring
5. Intermediate Friction Ring
6. Outer Friction Ring

The one that 1st and 2nd gear uses is a triple conical synchronizer ring. Compared to the single conical synchronizer ring, the structure of triple conical synchronizer ring may increase the friction surface significantly.

Gear Shift and Selection

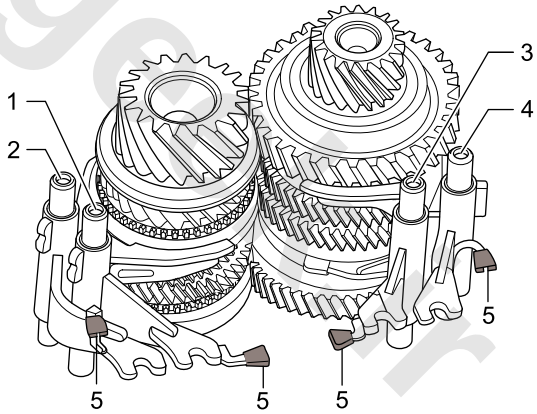

1. 6th/R Gear Fork
2. 5th Gear Fork
3. 2nd/4th Gear Fork
4. 1st/3rd Gear Fork
5. Magnet

The figure illustrates the gear shift process by taking 5th gear fork as an example, other gears are similar with it.

www.cargeek.ir

www.cargeek.ir

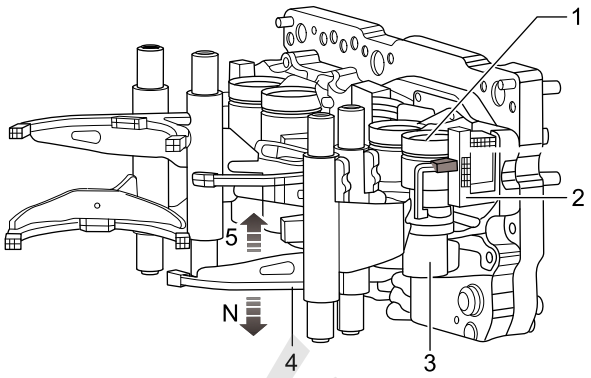

1. 5th Gear Fork Valve Body Piston Cylinder (in the direction of shifting to N gear)
2. 5th/N Gear Position Sensor
3. 5th Gear Fork Valve Body Piston Cylinder (in the direction of shifting to 5th gear)
4. 5th Gear Fork

Inside the transmission, the hydraulically-operated fork is controlled by the valve body piston cylinder to complete the gear shift, and the fork shaft is connected to the fork. During the gear shift, the transmission oil in the valve body is delivered into the oil cylinder at one side of the fork, meanwhile there is no oil pressure in the oil cylinder at other side of the fork, which allows the piston in the oil cylinder push the fork to move, at the same time, the fork turns synchronizer gear bushing to complete the gear shift.

After the gear is engaged, the pressure applied to the oil cylinder disappear, the fork is locked in the current position by the set pin.

There is a permanent magnet on each fork, the position sensor on the valve body control module can identify the precise location of each fork through the magnet.

Oil Pump and Oil Filter

Oil Pump

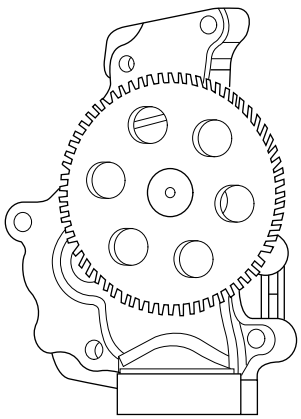

The oil pump is an external double gear pump, its main structure is a pair of mutually engaged gear. When the gear rotates, the volume of the tooth gap where the gear teeth at the suction chamber side are mutually disengaged is gradually increasing, and the pressure is reduced, the fluid flows into the tooth gap under the pressure difference. With the gear rotation, the fluid in each tooth gap is brought to the discharging chamber. The volume of the tooth gap where the gear teeth at the discharging chamber side are engaged is gradually decreasing, so as to discharge the fluid. With the engine running, the pump discharges the fluid continuously.

The pump flow is directly related to the pump speed.

Oil Filter

The oil filter consists of a suction filter and a pressure filter.

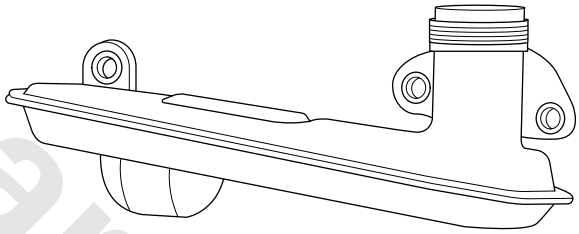

The suction filter is fitted at the bottom of the transmission housing and connected with the gear pump, it filters the oil entering into the transmission hydraulic system at the suction end of the gear pump. The suction filter mainly consists of filter housing and filter net, under the suction force of the oil pump, oil enters into the oil pump through the filter net, and the suction filtration is completed in this process.

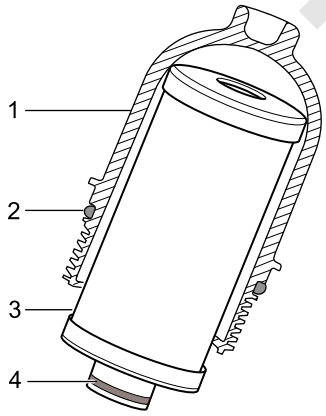

1. Pressure Filter Cap
2. O Ring - Pressure Filter Cover
3. Pressure Filter Element

www.cargeek.ir

www.cargeek.ir

4. O Ring - Pressure Filter Element

The pressure filter is fitted on the top of the transmission housing, it is located in the oil duct between the pump and valve body, and conducts fine filtration of the oil entering into the proportional solenoid valve oil circuit. The pressure filter is mainly composed of the filter cover, bypass valve and filter element.

Fluid Drain and Fluid Level

A baffle is provided on the main transmission housing, which ensures that the suction filter can suck enough fluid even when the vehicle tilts. The baffle divides the transmission into two fluid cavities, so the two cavities shall both be open when draining the fluid thoroughly.

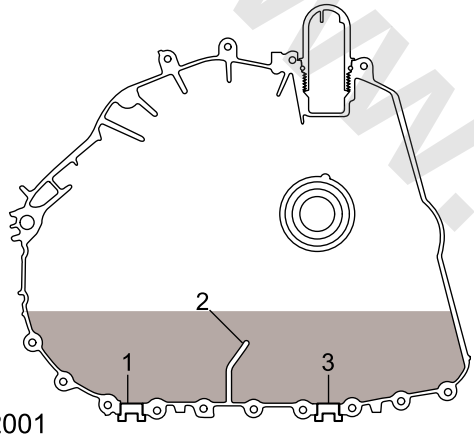

S122001

1. Fluid Drain Plug
2. Baffle
3. Fluid Drain Plug

Correct fluid level is significantly crucial for normal operation of the transmission.

- Low fluid level: oil pump will inhale air, this will result in low oil pressure and transmission malfunction.
- High fluid level: a large number of bubbles produced by the stir of the gear set will overflow from the vent pipe.

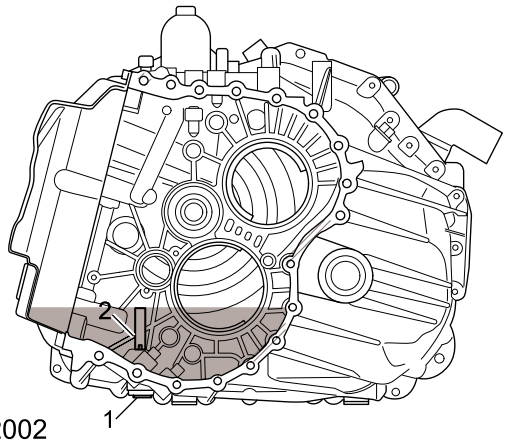

S122002

1. Drain Plug (Fluid Level Check)

2. Fluid Level Pipe

The transmission is fitted with a fluid level pipe which can be used to set the correct fluid level. During fluid level check, if fluid overflows as drops from the fluid level pipe, the transmission fluid level is correct. For correct fluid level setting, please refer to the "Service Guideline for Dual Clutch Automatic",

☞Fluid Level Check/Refill

Sensor

Satellite Sensor

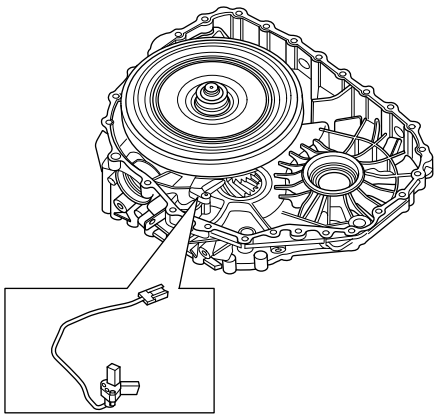

The satellite sensor assembly is fitted in the main housing, and is located next to the 1234 output shaft. The satellite sensor assembly integrates the output shaft speed sensor, clutch speed sensor (i.e., input speed sensor) and clutch temperature sensor.

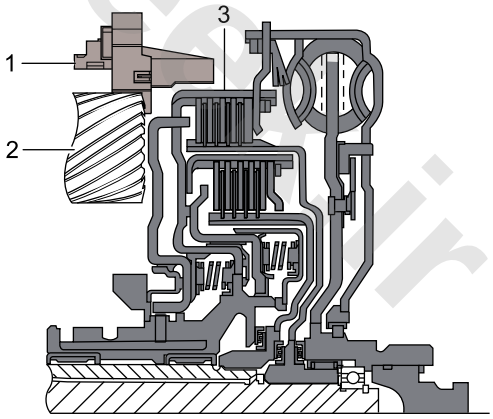

1. Satellite Sensor
2. 1234 Output Shaft Final Drive Driving Gear
3. Clutch Wheel Hub

The output shaft speed sensor operates based on the Hall principle, the output speed of the transmission is determined by detecting the output shaft final drive driving gear speed; the clutch speed sensor determines the input speed of the transmission by detecting the clutch wheel hub speed; and the clutch temperature sensor measures the temperature of the lubricating oil flowing out of the plate clutch.

www.cargeek.ir

www.cargeek.ir

Sensors can be divided into the following categories:

Pressure Sensor

There are totally 2 pressure sensors in the transmission, they are fitted on the valve body inside the transmission respectively, and used for detecting the pressures of both odd and even clutches in the dual clutch.

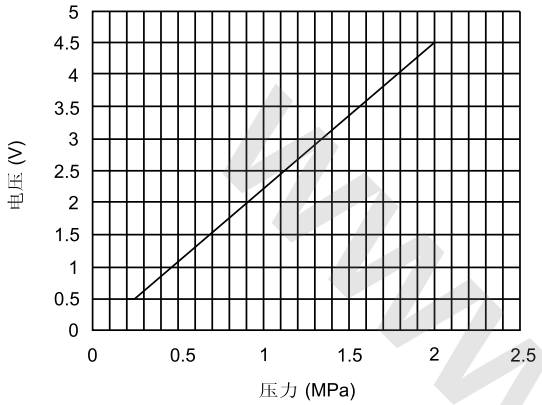

The pressure sensors are resistance strain gauge transducers, when the oil pressure controlling the clutch engagement changes, the deformation of resistance strain gauge will occur with the oil pressure change, so that the voltage signal generated by the sensor will increase along with the increased oil pressure. and vice visa.

All 3 wires of the pressure sensor are connected with the ECU. Among them, one is a power wire, one is a ground wire and the other is the wire for signal of voltage to ground, which varies with the oil pressure. **TCM** measures the controlling oil pressure of the transmission clutch based on this voltage change, so as to determine the current state of the dual clutch (engaged/separate).

Temperature Sensor

There are totally 3 temperature sensors in the transmission, namely, they are clutch temperature sensor, valve body temperature sensor, and solenoid temperature sensor respectively. The clutch temperature sensor is integrated in the satellite sensor, and the valve body temperature sensor and solenoid temperature sensor are located on the valve body. These temperature sensors which contact with the transmission oil are used to check the transmission temperature.

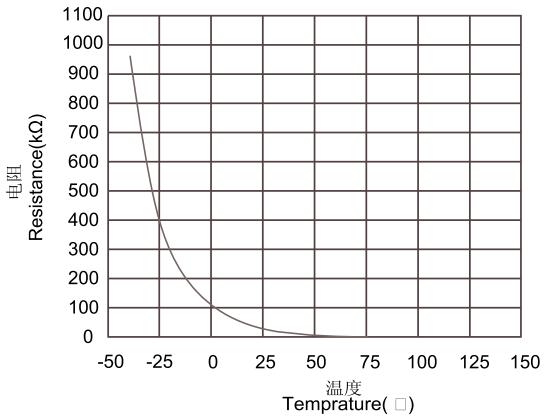

The oil temperature sensors are divided into 2 different types, the solenoid temperature sensor has a semiconductor thermistor inside which presents the negative temperature coefficient characteristics, that is, the higher the oil temperature, the smaller the resistance, or vice versa.

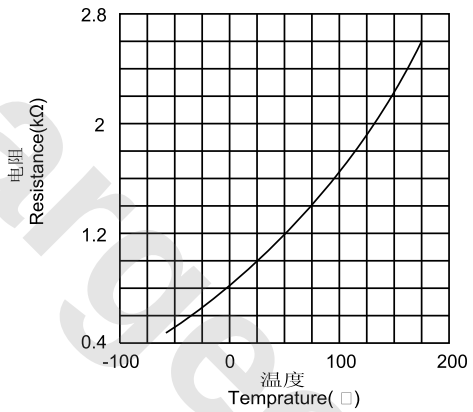

The valve body temperature sensor and clutch temperature sensor are silicon temperature sensors which utilize the diffused resistance principle, they have the positive temperature coefficient characteristics, that is, the higher the oil temperature, the greater the resistance, or vice versa.

2 wires of the oil temperature sensor are connected with **TCM**, among them, one is the ground wire, the other is the wire for voltage to ground, which varies with the resistance value. **TCM** measures the transmission hydraulic oil temperature based on this voltage change, so as to determine the oil injection pulse width of the cooling lubricant oil etc, together with the signals from other sensors.

www.cargeek.ir

Position Sensor

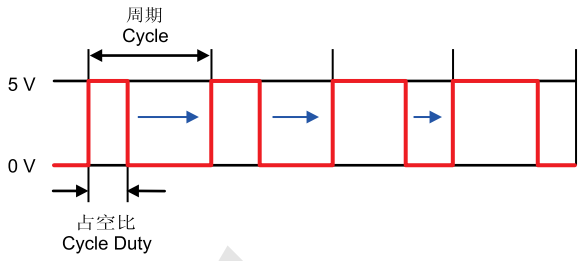

There are totally 4 fork position sensors in the transmission, they are fitted on the valve body inside the transmission respectively, and used for checking the positions of 4 forks. The fork position sensors are the ones which adopts the **PLCD** principle, when the magnet fitted on the fork moves while the fork executes the gear shift action, the duty ratio of the **PWM** signal generated by the sensor which are used to induce the magnet will increase or decrease along with the magnet position change, when the signal is normal, the operating range of the duty ratio should be 10% ~ 90%.

All 3 wires of the position sensor are connected with **TCM**, among them, one is a power wire, one is a ground wire and the other is the wire for signal of **PWM** to ground, the duty ratio will increase or decrease along with the magnet position change. **TCM** measures the positions of 4 forks based on this duty ratio signal, so as to determine the current gear and target gear of the transmission together with the signals from other sensors.

Speed Sensor

There are totally 4 speed sensors in the transmission, they are used for checking the rotation speed of the clutch, internal input shaft, external input shaft and output shaft, the clutch speed sensor and output shaft speed sensor are integrated in the satellite sensor, others are fitted on the valve body inside the transmission. All speed sensors are Hall-effect sensors, when the target wheel starts to rotate, the speed sensor will generate a series of pulse signal, the number of pulses will increase as the vehicle speed increases, the pulse signal frequency of the speed sensor will increase as the rotation speed of the inspected component increases, but the duty ratio is kept constant at any speed.

2 wires of the speed sensor are connected with **TCM**, among them, one is the power wire, the other is the wire for pulse signal to ground, its frequency will increase as the rotation speed of the corresponding transmission component increases, **TCM** measures the rotation speeds of different transmission shafts and clutches based on this pulse signal, so as to determine the transmission input, output rotation speed and speed ratio, etc.

Solenoid Valve

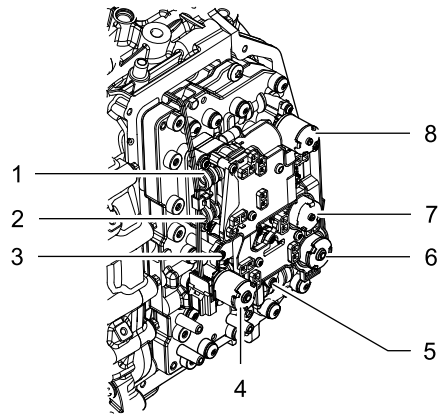

1. Even Clutch Solenoid
2. Odd Clutch Solenoid
3. Multiplexer Solenoid 1
4. Main Oil Circuit Pressure Solenoid
5. Multiplexer Solenoid 2
6. Lubricating Oil Circuit Pressure Solenoid
7. Shift Solenoid 2
8. Shift Solenoid 1

Solenoids may be divided into 2 categories according to their operation: proportional solenoid and switch solenoid.

Each solenoid includes an inner coil and a needle valve. The needle valve is activated by the voltage that passes through the electromagnetic coil, and opens or closes the hydraulic circuit. All solenoids are equipped with 2 pins, which are connected to **TCM** via the harness. Among them, one is for power supply, and the other is for signal control. **TCM** outputs control signals to the solenoid based on the vehicle driving condition and collected sensor signal.

Main Oil Pressure and Lubricating Oil Pressure Solenoid

The transmission uses 1 main oil pressure solenoid and 1 lubricating oil pressure solenoid, they all pertain to current pulse width modulation solenoids, and are fitted on the valve body inside the transmission respectively.

The main oil pressure solenoid is used to modulate the main oil circuit pressure of the hydraulic system. The greater the control current of the main oil circuit solenoid is, the smaller the pressure of the main oil circuit is, and the smaller the control current is, the greater the pressure of the main oil circuit is.

The lubricating oil pressure solenoid is used to modulate the cooling lubricating oil pressure to the clutch. The greater the control current of the lubricating oil pressure solenoid is, the

www.cargeek.ir

www.cargeek.ir

smaller the flow volume entering into the clutch is, and vice versa.

Clutch Solenoid

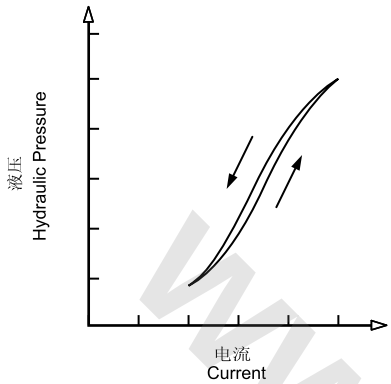

The transmission has 2 clutch solenoids, which pertain to current pulse width modulation solenoids, and are fitted on the valve body inside the transmission respectively. They are used to control and modulate the combined oil pressure of odd and even clutches in the dual clutch respectively. The clutch solenoid controls the hydraulic pressure linearly through the current size, that is, the hydraulic pressure will increase as the control current increases, or vice visa.

Shift Solenoid

The transmission has 2 shift solenoids, which pertain to current pulse width modulation solenoids, and are fitted on the valve body inside the transmission respectively. 2 shift solenoids and 2 multiplexer solenoids participate in the control on the shift oil pressure and 4 forks.

multiplexer Solenoid

The DCT transmission has 2 multiplexer solenoids, which pertain to current pulse width modulation solenoids, and are fitted on the valve body inside the transmission respectively. 2 multiplexer solenoids and 2 shift solenoids participate in the control on 4 forks.

Solenoid Operation State

Gear		Solenoid Valve					
		Gear Shift 1	Gear Shift 2	Multiplexer 1	Multiplexer 2	Odd Clutch	Even Clutch
P		-	-	OFF	OFF	-	-
R		●	-	OFF	ON	●	-
N		-	-	OFF	OFF	-	-
D	1	-	●	OFF	OFF	●	-
	2	●	-	ON	ON	-	●
	3	●	-	OFF	OFF	●	-
	4	-	●	ON	ON	-	●
	5	●	-	ON	OFF	●	-
	6	-	●	OFF	ON	-	●

- ON : Switch Solenoid is On
- OFF : Switch Solenoid is Off
- ● : Current Pulse Width Modulation Solenoid is Activated

Connecting Module and Harness Assembly

Connecting Module and Harness Assembly

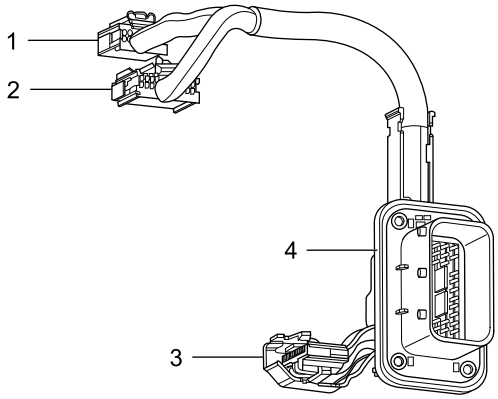

1. Connecting to Sensor Board
2. Connecting to Valve Body Circuit Board
3. Connecting to Satellite Sensor
4. Connecting to **TCM**

End View and Pin Information of Valve Body Module Harness Connector BY002

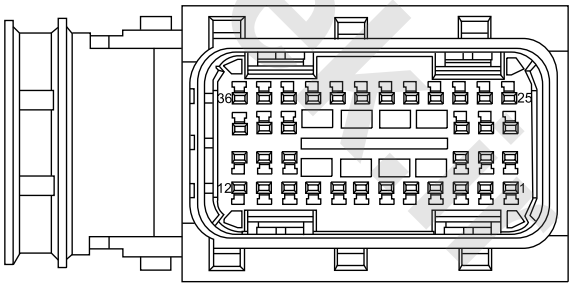

Pin No.	Description
1	Odd Clutch Pressure Sensor Signal
2	Solenoid Temperature Sensor Signal
3	Odd Clutch Pressure Sensor Signal
4	Valve Body Temperature Sensor Signal
5	Sensor Ground 2
6	5V Sensor Power Supply 2
7	Even Input Shaft Speed Sensor Signal

www.cargeek.ir

www.cargeek.ir

Pin No.	Description
8	1st/4th Gear Position Sensor Signal
9	6th/R Gear Position Sensor Signal
10	—
11	Multiplexer Solenoid 2
12	Multiplexer Solenoid 1
13	SubROM Chip Option
14	SubROM Read/Write
15	SubROM Clock
16	Main Oil Circuit Pressure Solenoid
17	Shift Solenoid 2
18	Shift Solenoid 1
19	Clutch Temperature Sensor Signal
20	9V Sensor Power Supply 1
21	9V Sensor Power Supply 2
22	Lubricating Oil Circuit Pressure Solenoid
23	Even Clutch Solenoid
24	Odd Clutch Solenoid
25	Clutch Speed Sensor Signal
26	Output Shaft Speed Sensor Signal
27	Sensor Ground 1
28	Sensor Ground 1
29	5V Sensor Power Supply 1
30	Odd Input Shaft Speed Sensor Signal
31	5th Gear Position Sensor Signal
32	1st/3rd Gear Position Sensor Signal
33	—
34	Solenoid Power Supply 3 (lubrication oil circuit pressure solenoid, main oil circuit pressure solenoid)
35	Solenoid Power Supply 2 (Even clutch solenoid, shift solenoid 2, multiplexer solenoid 2)
36	Solenoid Power Supply 1 (Odd clutch solenoid, shift solenoid 1, multiplexer solenoid 1)

SubROM

SubROM is a memory chip located on the valve body of the transmission, it stores the relevant information such as the fork position of each gear, clutch meshing point, characteristic curve of the solenoid etc. When replacing **TCM**, it is required to transmit these data in the SubROM into the new **TCM** with a scan tool.

Transmission Control Module (TCM)

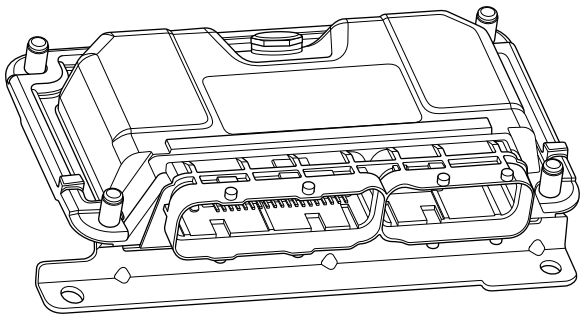

The **TCM** is located on the passenger side fender and connected to the transmission harness via 1 connector, the connector has a total of 81 pins.

TCM uses an Electrically Erasable Read-Only Memory (**EEPROM**), therefore a new or replaced **TCM** may be used for external configuration. **EEPROM** can also allow **TCM** to be updated with new information and market-specific data.To enter new information, **TCM** must be configured with a scan tool. **EEPROM** can allow **TCM** to be reconfigured for many times as required, so as to meet the constantly changing parameters and regulations.

TCM stores the signal values of the transmission sensors and the actuators. These stored signals ensure that the transmission can always obtain the optimal performance. If the battery voltage is too low, such as the battery discharges, the information will be lost. When starting the engine with the battery discharged or disconnected, the **TCM** resumes the default value. The **EEPROM** in the **TCM** allows the stored value to be rapidly accessed again.

Input/Output

The sensor signal enables the **TCM** to monitor the transmission state. The **TCM** handles the signals and compares them with the data stored in the memory. If these signals are not within the range of parameters stored in **TCM**, **TCM** will adjust the operation of the transmission through the actuator, so as to provide the optimal driveability and other performances.

TCM also connects with the following units through the **CAN** bus:

- **ECM**
- **BCM**
- **ABS**/**SCS** Regulator **ECU**
- Instrument Pack
- Diagnostic Socket

www.cargeek.ir

www.cargeek.ir

TCM receives the input signals of throttle opening, engine coolant temperature, engine speed, engine torque, etc. from **ECM**; **TCM** also receives the input signals of brake switch, pressure sensor, clutch speed, oil temperature, valve body solenoid state, mode switch, etc. In addition, **TCM** outputs the torque control request, shift gear information and failure warning information to **ECM** and outputs execution signal, etc. to the valve body solenoid.

www.cargeek.ir

www.cargeek.ir

www.cargeek.ir

End View and Pin Information of Transmission Control Module (TCM) Harness Connector BY001

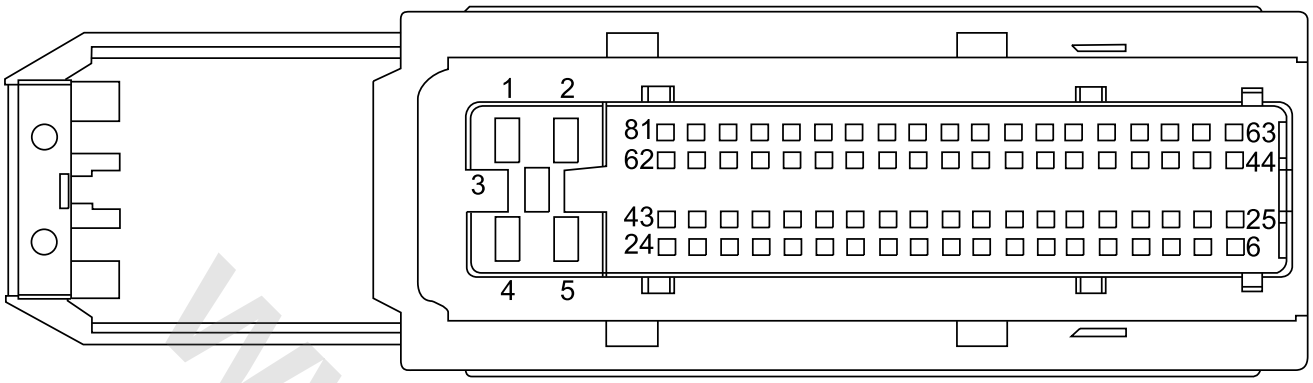

Pin No.	Description	Pin No.	Description
1	Ground	32–37	—
2	Ground	38	Shift Solenoid 2
3	Ground	39	Lubricating Oil Circuit Pressure Solenoid
4	KL.30	40–43	—
5	KL.30	44	Multiplexer Solenoid 1
6	KL.15	45	Data Output: P/N Hard Wire
7	9V Sensor Power Supply 1	46–48	—
8	9V Sensor Power Supply 2	49	SubROM Write/Read Selection
9	Odd Shaft Speed Sensor Signal	50–52	—
10	Even Shaft Speed Sensor Signal	53	Clutch Oil Temperature Sensor Signal
11	1st/3rd Gear Fork Position Sensor Signal	54	Valve Body Oil Temperature Sensor Signal
12	2nd/4th Gear Fork Position Sensor Signal	55	Instrument HS CAN Low
13	—	56	Instrument HS CAN High
14	KL.R	57	Odd Clutch Pressure Solenoid
15	Odd Clutch Pressure Sensor Signal	58	Even Clutch Pressure Solenoid
16	Even Clutch Pressure Sensor Signal	59	—
17	High Speed CAN Low	60	Solenoid Power Supply 2 (Even clutch solenoid, shift solenoid 2, even multiplexer solenoid)
18	High Speed CAN High	61–62	—
19	Shift Solenoid 1	63	Multiplexer Solenoid 2
20	Main Oil Circuit Pressure Solenoid	64	Sensor Ground 1
21–22	—	65	Sensor Ground 2
23	Solenoid Power Supply 1 (Odd clutch, shift solenoid 1, odd multiplexer solenoid)	66–67	—
24–25	—	68	SubROM Clock
26	5V Sensor Power Supply 1	69	SubROM Chip Option
27	5V Sensor Power Supply 2	70	—
28	Output Shaft Speed Sensor Signal	71	Sensor Ground 1
29	Engine Speed Sensor Signal	72	Oil Pan Oil Temperature Sensor Signal
30	5th/N Gear Fork Position Sensor Signal	73–80	—
31	6th/R Gear Fork Position Sensor Signal	81	Solenoid Power Supply 3 (Main oil circuit pressure solenoid, lubrication oil circuit pressure solenoid)

www.cargeek.ir

www.cargeek.ir

Operation

Transmission Power Flow

The delivery of torque in transmission is achieved via inner and outer clutch. Each clutch drives an input shaft. The inner input shaft is driven by the outer (odd) clutch, while the outer input shaft is driven by the inner (even) clutch.

The power flow of each gear is shown in the following diagram:

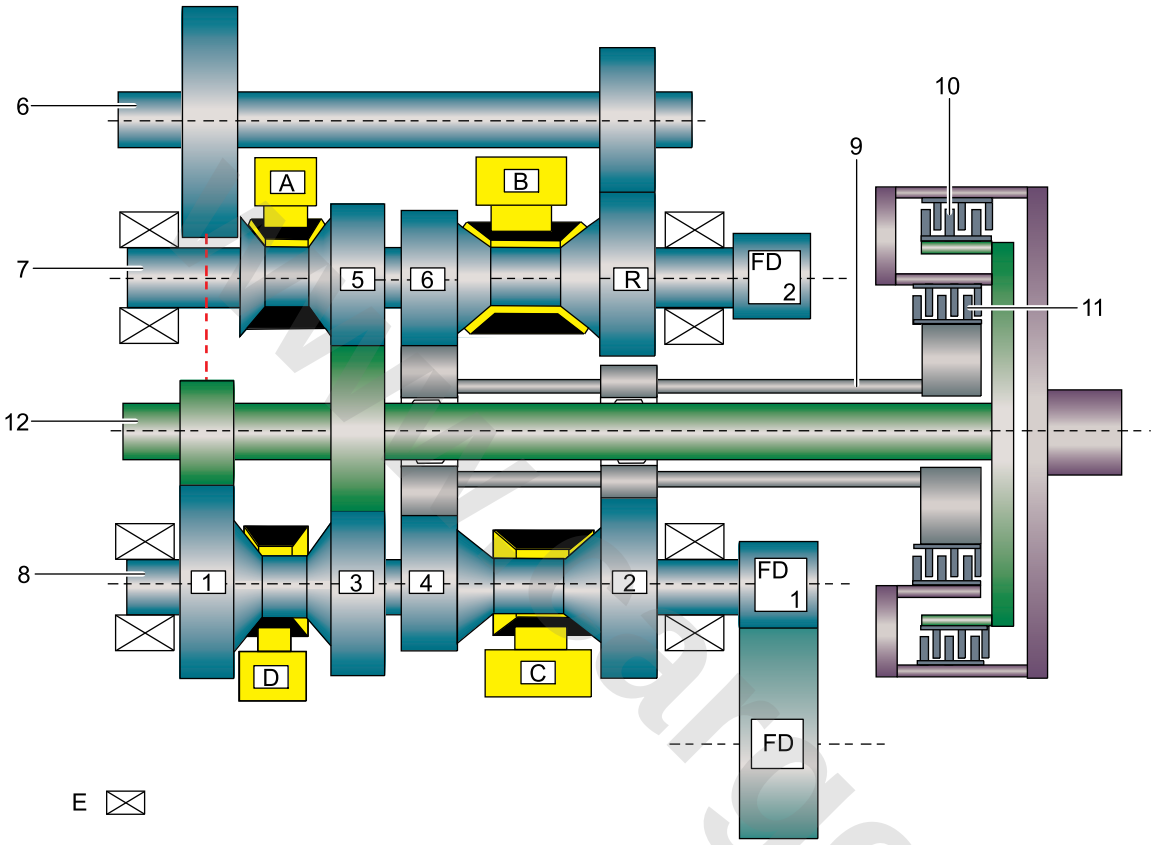

Data Note

1	Output Shaft 1st Gear Assembly	**11**	Inner (Even) Clutch
2	Output Shaft 2nd Gear Assembly	**12**	Inner Input Shaft
3	Output Shaft 3rd Gear Assembly	**A**	5th Gear Synchronizer Assembly
4	Output Shaft 4th Gear Assembly	**B**	6th/Reverse Gear Synchronizer Assembly
5	Output Shaft 5th Gear Assembly	**C**	2nd/4th Gear Synchronizer Assembly
R	Output Shaft Reverse Gear Assembly	**D**	1st/3rd Gear Synchronizer Assembly
6	Reverse Gear Shaft	**E**	Input Shaft Bearing
7	56R Output Shaft	**FD**	Final Drive Driven Gear
8	1234 Output Shaft	**FD1**	1234 Output Shaft Final Drive Driving Gear
9	Outer Input Shaft	**FD2**	56R Output Shaft Final Drive Driving Gear
10	Outer (Odd) Clutch		

www.cargeek.ir

www.cargeek.ir

Shift Fork and Clutch State

Gear		Shift Fork Position				Clutch	
		5th Gear	6th/R Gear	2nd/4th Gear	1st/3rd Gear	Outer (Odd)	Inner (Even)
P		M	R	R	M	O	O
R		M	R	R	M	C	O
N		M	R	R	M	O	O
D	1	M	M	R	L	C	O
	2	M	M	R	U	O	C
	3	M	M	U	R	C	O
	4	U	M	L	U	O	C
	5	R	U	U	M	C	O
	6	R	L	M	M	O	C

- O=Open
- C=Close
- L=Left
- R=Right
- M=Middle
- U=Unknow (depend on the current driving status)

www.cargeek.ir

www.cargeek.ir

www.cargeek.ir

1st Gear

Gear		Solenoid						Shift Fork Position			
		Gear Shift 1	Gear Shift 2	Multiplexer 1	Multiplexer 2	Odd Clutch	Even Clutch	5th Gear	6th/R Gear	2nd/4th Gear	1st/3rd Gear
D	1	-	•	OFF	OFF	•	-	M	M	R	L

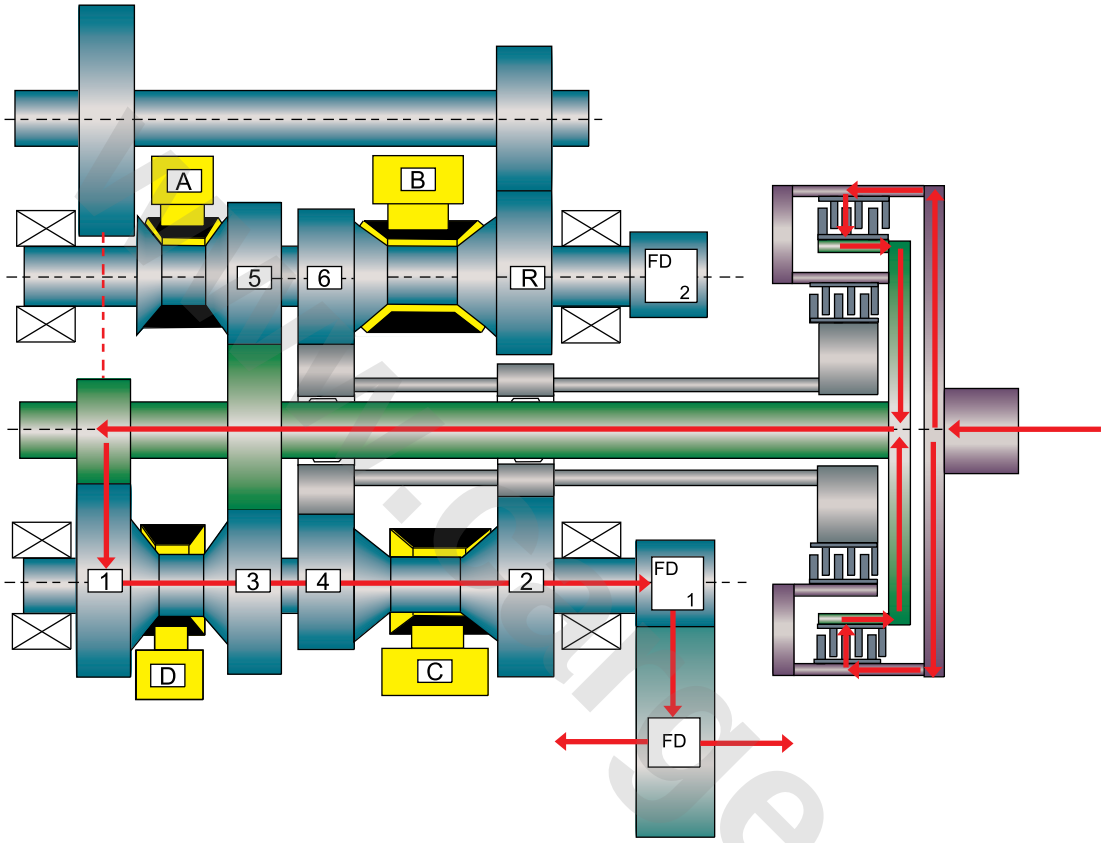

Power Flow:

Engine - Outer (Odd) Clutch - Inner Input Shaft - 1st Gear - 1234 Output Shaft - Final Drive Gear - Differential- Drive Shaft

www.cargeek.ir

2nd Gear

Gear		Solenoid						Shift Fork Position			
		Gear Shift 1	Gear Shift 2	Multiplexer 1	Multiplexer 2	Odd Clutch	Even Clutch	5th Gear	6th/R Gear	2nd/4th Gear	1st/3rd Gear
D	2	•	-	ON	ON	-	•	M	M	R	U

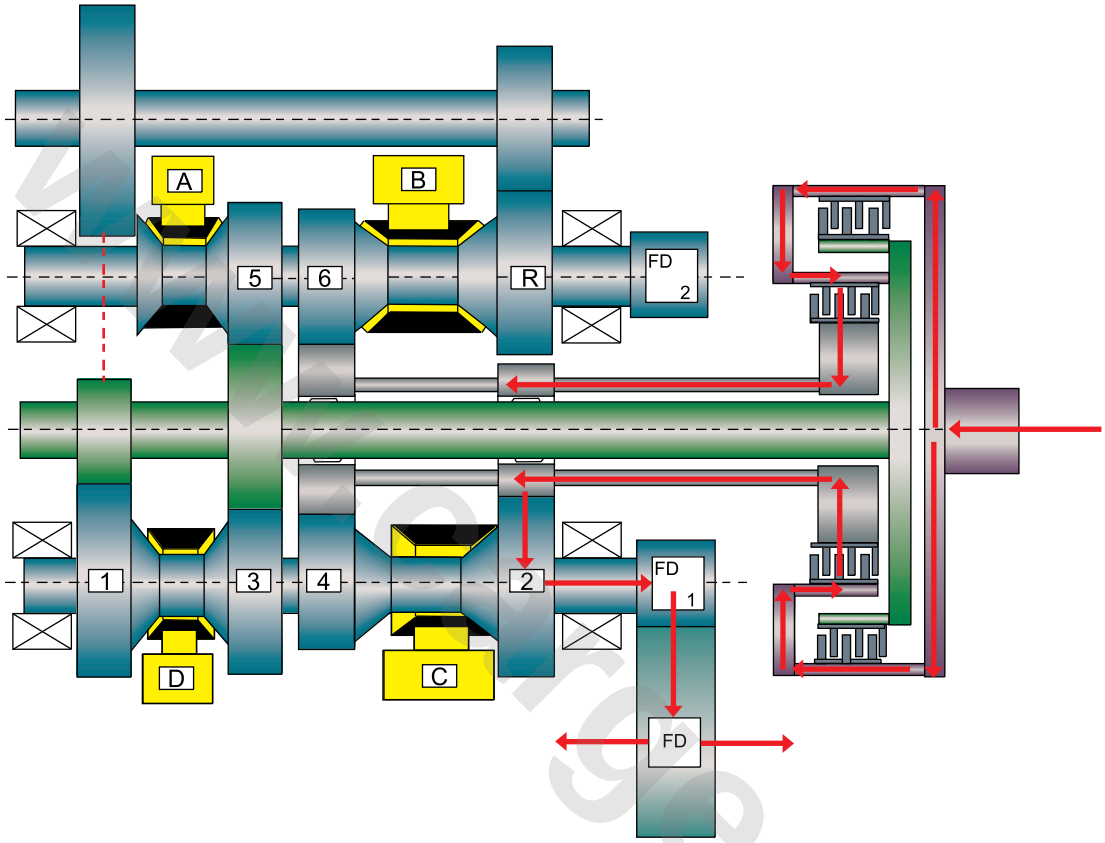

Power Flow:

Engine - Inner (Even) Clutch - Outer Input Shaft - 2nd Gear - 1234 Output Shaft - Final Drive Gear - Differential- Drive Shaft

www.cargeek.ir

3rd Gear

Gear		Solenoid						Shift Fork Position			
		Gear Shift 1	Gear Shift 2	Multiplexer 1	Multiplexer 2	Odd Clutch	Even Clutch	5th Gear	6th/R Gear	2nd/4th Gear	1st/3rd Gear
D	3	•	-	OFF	OFF	•	-	M	M	U	R

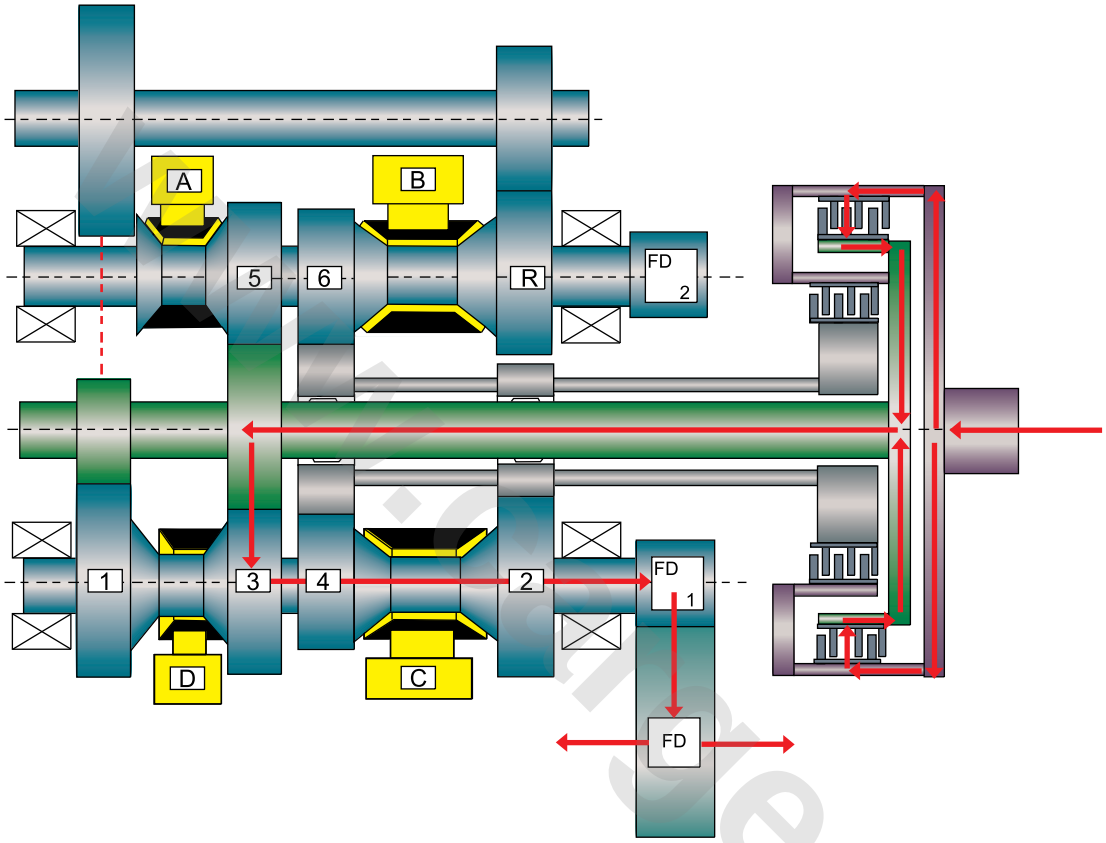

Power Flow:

Engine - Outer (Odd) Clutch - Inner Input Shaft - 3rd Gear - 1234 Output Shaft - Final Drive Gear - Differential- Drive Shaft

www.cargeek.ir

www.cargeek.ir

4th Gear

Gear		Solenoid						Shift Fork Position			
		Gear Shift 1	Gear Shift 2	Multiplexer 1	Multiplexer 2	Odd Clutch	Even Clutch	5th Gear	6th/R Gear	2nd/4th Gear	1st/3rd Gear
D	4	-	•	ON	ON	-	•	U	M	L	U

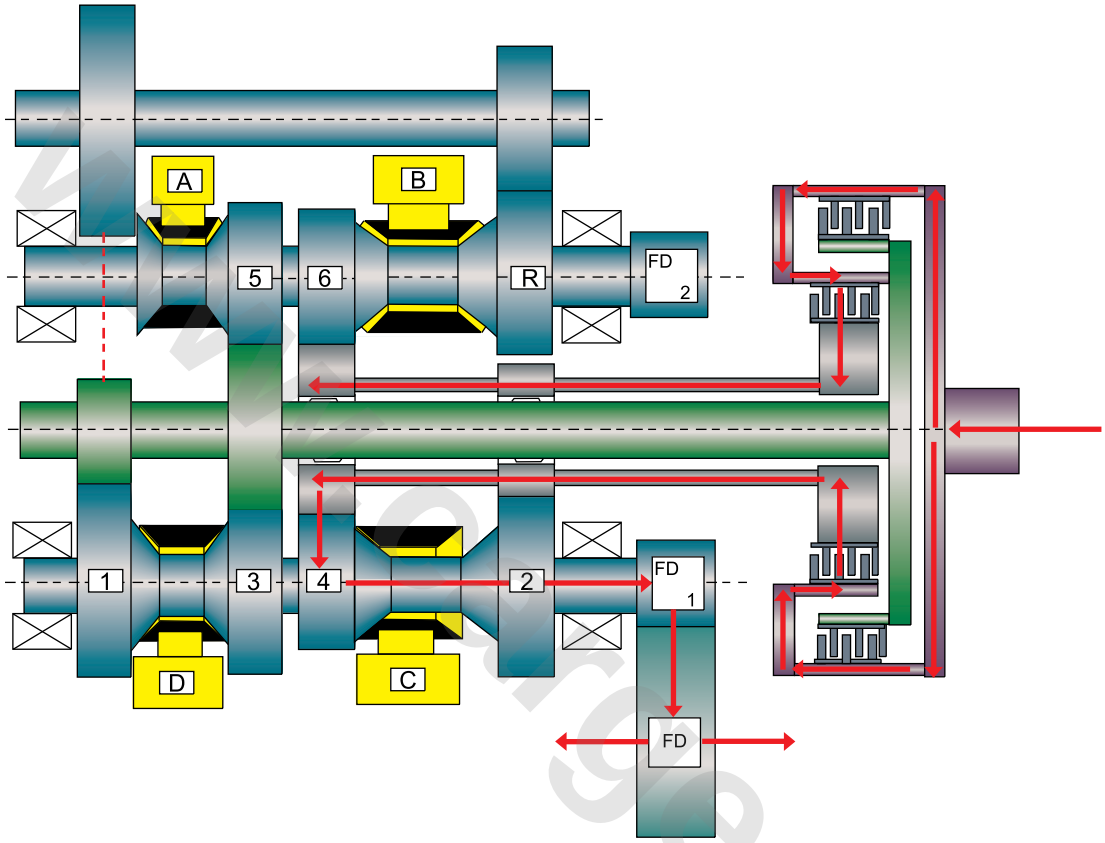

Power Flow:

Engine - Inner (Even) Clutch - Outer Input Shaft - 4th Gear - 1234 Output Shaft - Final Drive Gear - Differential- Drive Shaft

www.cargeek.ir

www.cargeek.ir

5th Gear

Gear		Solenoid						Shift Fork Position			
		Gear Shift 1	Gear Shift 2	Multiplexer 1	Multiplexer 2	Odd Clutch	Even Clutch	5th Gear	6th/R Gear	2nd/4th Gear	1st/3rd Gear
D	5	•	-	ON	OFF	•	-	R	U	U	M

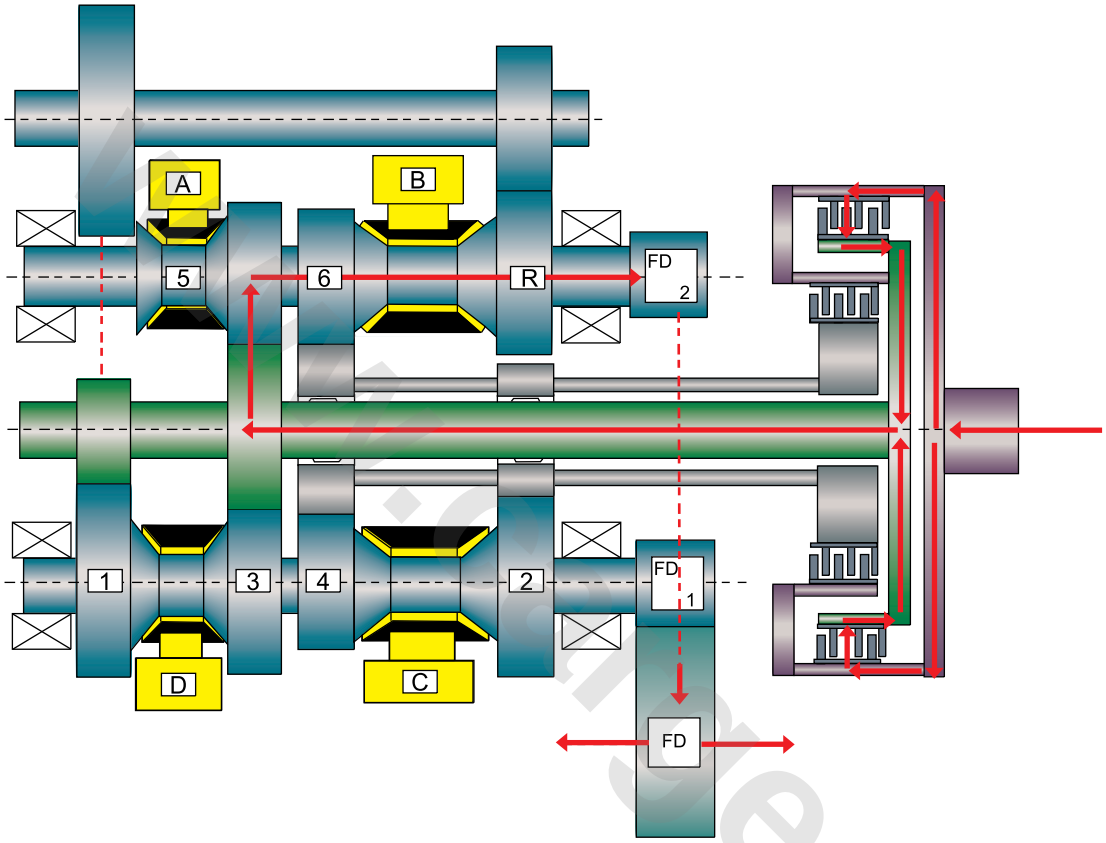

Power Flow:

Engine - Outer (Odd) Clutch - Inner Input Shaft - 5th Gear - 56R Output Shaft - Final Drive Gear - Differential- Drive Shaft

www.cargeek.ir

6th Gear

Gear		Solenoid						Shift Fork Position			
		Gear Shift 1	Gear Shift 2	Multiplexer 1	Multiplexer 2	Odd Clutch	Even Clutch	5th Gear	6th/R Gear	2nd/4th Gear	1st/3rd Gear
D	6	-	•	OFF	ON	-	•	R	L	M	M

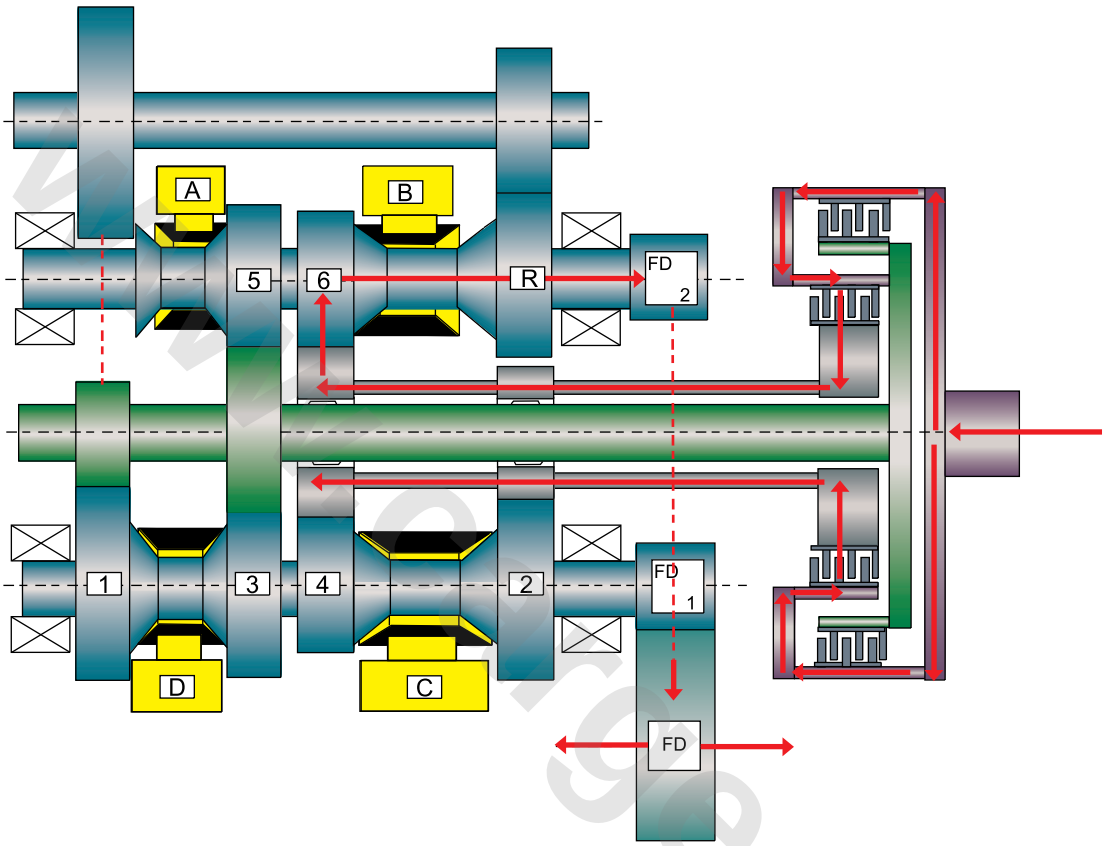

Power Flow:

Engine - Inner (Even) Clutch - Outer Input Shaft - 6th Gear - 56R Output Shaft - Final Drive Gear - Differential- Drive Shaft

www.cargeek.ir

www.cargeek.ir

Reverse Gear

Gear	Solenoid						Shift Fork Position			
	Gear Shift 1	Gear Shift 2	Multiplexer 1	Multiplexer 2	Odd Clutch	Even Clutch	5th Gear	6th/R Gear	2nd/4th Gear	1st/3rd Gear
R	•	-	OFF	ON	•	-	M	R	R	M

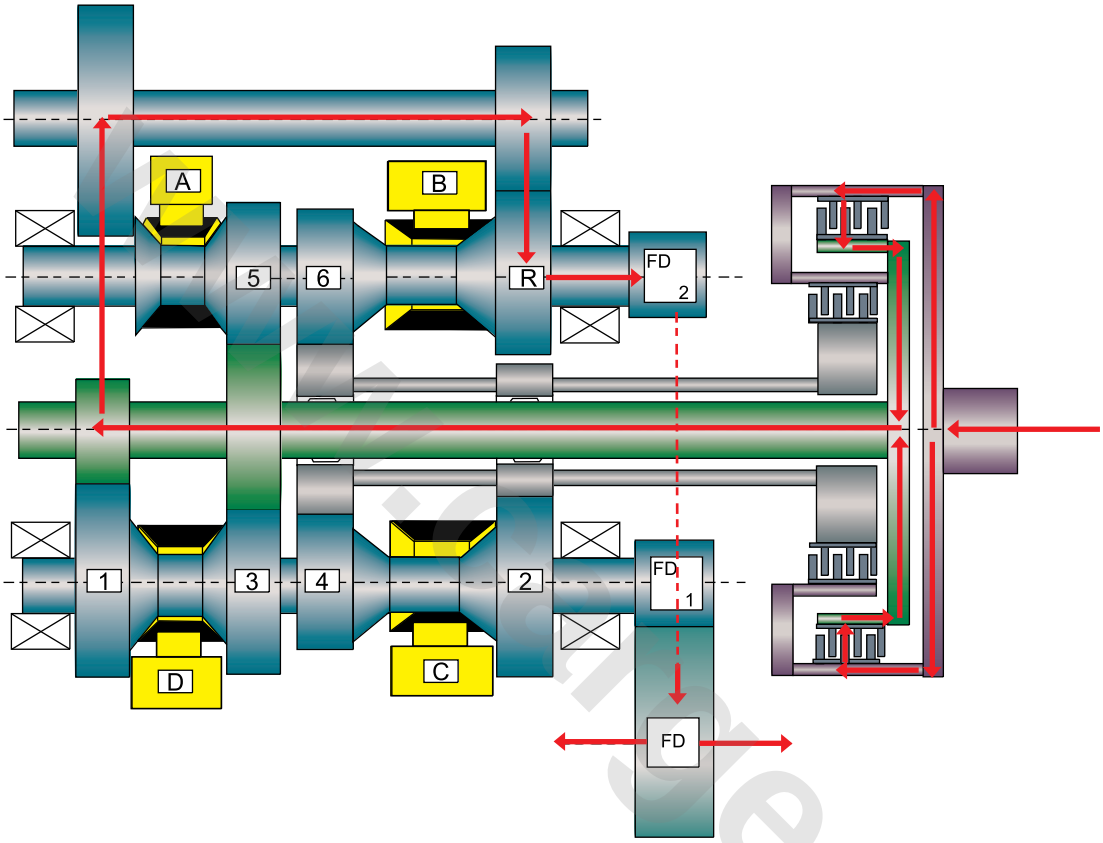

Power Flow:

Engine - Outer (Odd) Clutch - Inner Input Shaft - Reverse Gear Shaft - 56R Output Shaft - Final Drive Gear - Differential- Drive Shaft

www.cargeek.ir

Hydraulic Oil Circuit

Hydraulic system is mainly divided into two parts:

1. High pressure oil circuit, mainly in charge of gear shift of transmission and clutch operation.
2. Low pressure oil circuit, mainly in charge of the lubrication of the transmission gear, shaft, bearing and clutch cooling.

Establishment and distribution of the hydraulic pressure: the oil enters into the hydraulic system through the filter and oil pump, the mainline pressure control valve controls the mainline pressure range from 0 to 3.27MPa, the system oil circuit is divided into two parts after flowing through the mainline pressure modulator valve: high pressure oil circuit and low pressure oil circuit.

The high pressure oil circuit takes charge of clutch and gear shift control. The clutch solenoid adjust oil circuit pressure range from 0 to 1.8MPa.

After a part of hydraulic oil flowing in the mainline pressure control valve, the pressure is reduced within 0.57MPa. This oil circuit is low pressure lubrication cooling oil circuit. The low pressure oil circuit is divided into two parts after coming out of the mainline pressure control valve, one part enters into the oil cooler via the housing oil groove, returns to transmission after cooling from oil cooler, and then connects with oil spray bar and output shaft lubrication oil circuit after entering into the transmission. The other part flows into the clutch lubrication oil circuit after adjusted by the lube pressure valve, and then flows back to the oil pan after the clutch is cooled down.

www.cargeek.ir

www.cargeek.ir

Service Procedures

Dual Clutch Automatic Transmission

Remove

1. Secure the vehicle on the lift.
2. Remove the battery box.

☞ **Battery Remove**

3. Remove 1 bolt fixing the oil cooler pipe clip to the automatic transmission and remove the pipe clip.

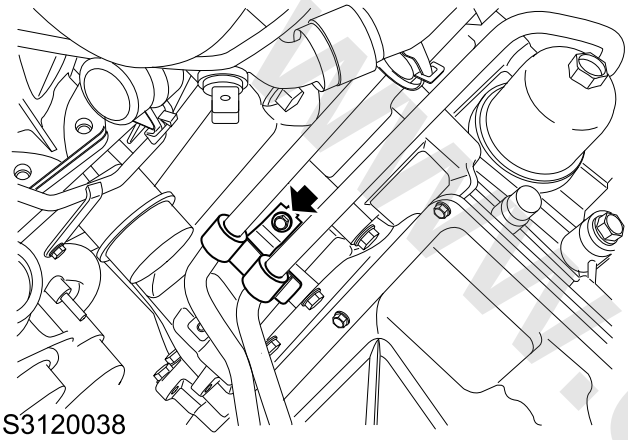

S3120038

4. Remove the bolt connecting the oil cooler pipe to the automatic transmission, disconnect the pipe from the automatic transmission and discard the seal ring.

Caution: Always fit plugs to open connections to prevent contamination.

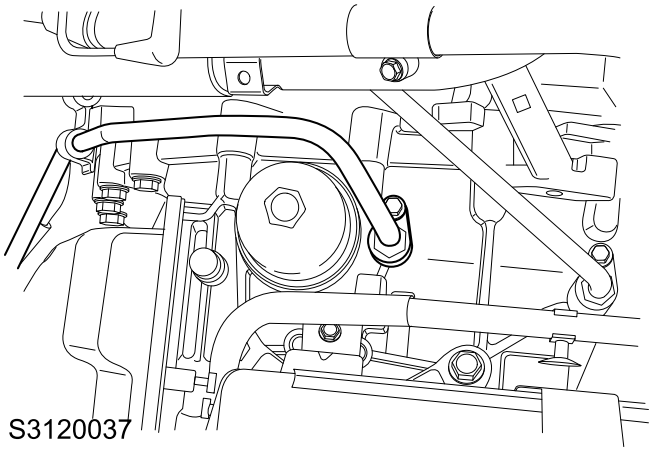

S3120037

5. Remove 2 central bolts connecting the engine cylinder block to the transmission.

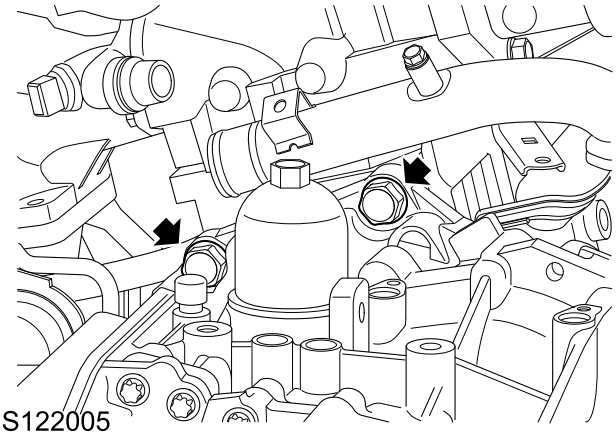

S122005

6. Fit the engine lug of the TEN00120 to the engine, tighten the bolt to **22–28Nm** and check the torque.

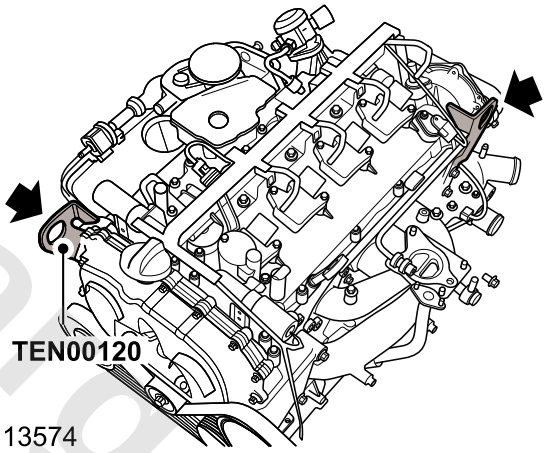

S1113574

7. Fix the engine with the **T10007** and **TEN00070**.

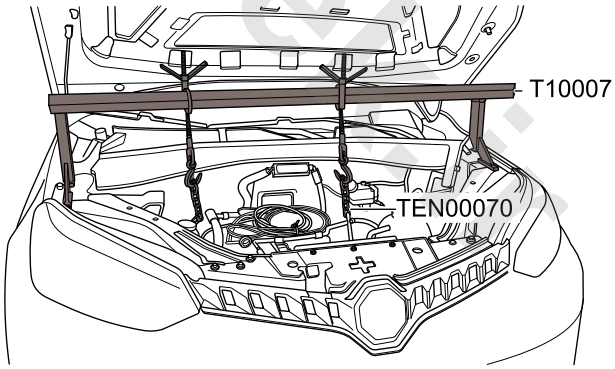

S1113568

8. Remove 3 bolts fixing the transmission suspension to the transmission.

www.cargeek.ir

www.cargeek.ir

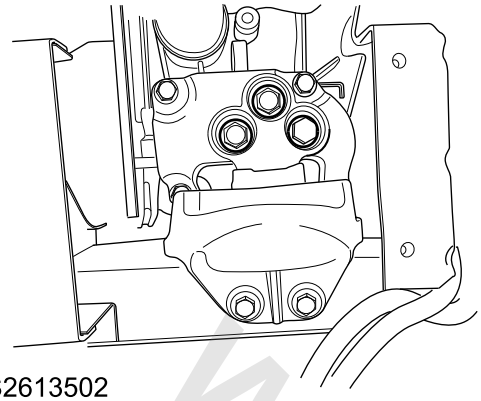

S2613502

9. Raise the vehicle to a suitable position with the lift.
10. Disconnect the harness from the connector of the dual clutch automatic transmission.

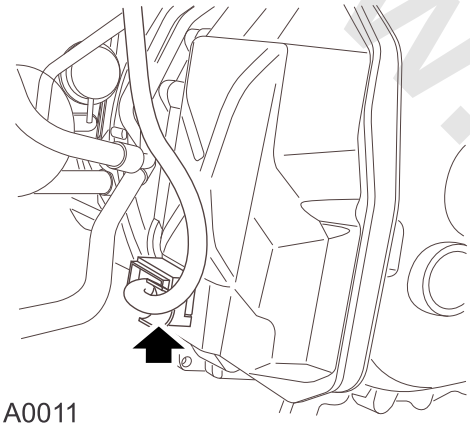

S111A0011

11. Drain the automatic transmission fluid.

Dual Clutch Automatic Transmission Fluid - Drain

12. Remove the front subframe.

Front Subframe Remove

13. Remove the PTU.

PTU Remove

14. Remove the starter.

Starter Remove

15. Remove the parking brake cable bracket.

Parking Brake Cable Bracket Remove

16. Rotate the flywheel to expose the bolts connecting the flywheel with the flywheel plate from the starter mounting port.
17. Remove and discard 6 bolts connecting the flywheel plate with the flywheel.

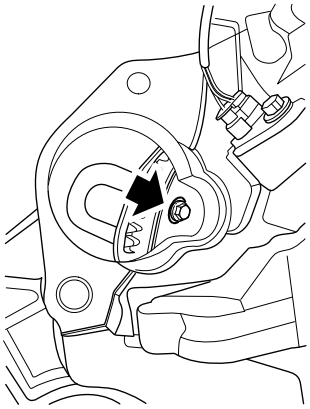

S1213101

18. Support the transmission with a bracket.
19. Remove the remaining 6 bolts connecting the engine to the transmission.
20. With assistance, release the transmission and engine from the locating pin, and put the transmission aside.
21. Lock the dual clutch module by securing the dual clutch module with a panel.
22. Remove 4 bolts securing the automatic transmission mounting bracket on the transmission, and remove the bracket.

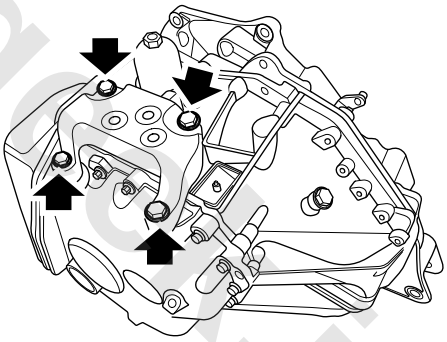

S1213102

Refit

1. Clean the junction of the engine and transmission.
2. Clean the locating pin and pin hole of the transmission and engine.
3. Fix the automatic transmission mounting bracket to the automatic transmission, fit 4 bolts, tighten to **55–65Nm** and check the torque.
4. Secure the automatic transmission holder on the bracket, then lift and locate the bracket to the vehicle.
5. With assistance, align the front of the hydraulic torque converter with the engine crankshaft hole, and align the engine locating pin with the locating pin hole of the automatic transmission and allow the transmission and engine to fit together.

www.cargeek.ir

www.cargeek.ir

Caution: Take care not to damage the flywheel connecting plate or clutch sealing cover when connecting engine and transmission, otherwise transmission failure could result!

6. Fit 8 bolts connecting the engine and automatic transmission, tighten to **75–90Nm** in diagonal sequence, check the torque and mark with the marker.
7. Rotate the crankshaft, align the hole on the flywheel with the bolt hole on the flywheel plate, fit 2 bolts and pre-tighten to 3–5Nm.
8. Rotate the crankshaft (appr. 120°), align the hole on the flywheel with the bolt hole on the flywheel plate, fit 2 bolts and pre-tighten to 3–5Nm.
9. Rotate the crankshaft (appr. 120°) again, align the hole on the flywheel with the bolt hole on the flywheel plate, fit 2 bolts and pre-tighten to 3–5Nm.
10. Tighten 6 bolts to **28–32Nm** in the sequence of 1–5–3–4–2–6, and mark with the marker.

Caution: Take care to fit correct bolt securing flywheel connecting plate to flywheel. If not, the longer bolt will damage the clutch sealing cover, transmission failure could result!

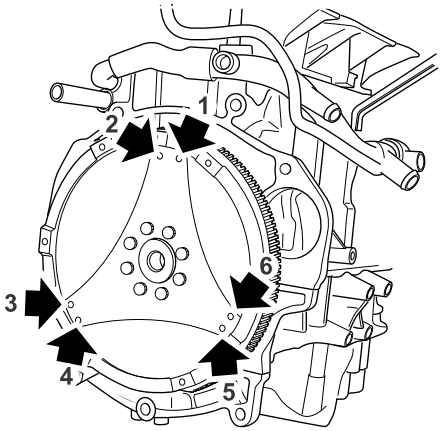

S1213109

11. Fit the parking brake cable bracket.

☞**Parking Brake Cable Bracket Refit**

12. Fit the starter.

☞**Starter Refit**

13. Fit the PTU.

☞**PTU Refit**

14. Fit the front subframe.

☞**Front Subframe Refit**

15. Connect the connector of the dual clutch automatic transmission.
16. Lower the vehicle.
17. Fix the transmission suspension to the transmission, fit 2 bolts, tighten to , fit 1 nut, tighten to **90–110Nm**, and check the torque.
18. Fit the remaining 2 bolts connecting the automatic transmission and engine, tighten to **75–90Nm**, and check the torque.
19. Remove the plug, fit a new seal to the oil cooler pipe, and apply clean automatic transmission fluid to it.
20. Secure the oil cooler pipe to the automatic transmission, fit 1 bolt respectively, tighten to **7–10Nm**, and check the torque.
21. Secure the oil cooler pipe clip to the automatic transmission, fit 1 bolt, tighten to **7–10Nm**, and check the torque.
22. Fit the battery box.

☞**Battery Refit**

23. Refill automatic transmission fluid

☞**Dual Clutch Automatic Transmission Fluid - Refill**

24. Programme and code the EEPROM.

☞**Reset EEPROM Data to Default Value**

25. Programme and code the SubROM.

☞**Read SubROM Data (all).**

26. Test the automatic transmission sensor.

☞**Automatic Transmission Sensor Test**

www.cargeek.ir

TCM - Dual Clutch Automatic Transmission

Remove

1. Disconnect the battery negative.
2. Remove the left front wheelhouse liner.

☞ **Front Wheelhouse Liner Remove**

3. Remove 2 bolts fixing the TCM bracket to the vehicle body.
4. Disconnect the transmission control module connector.

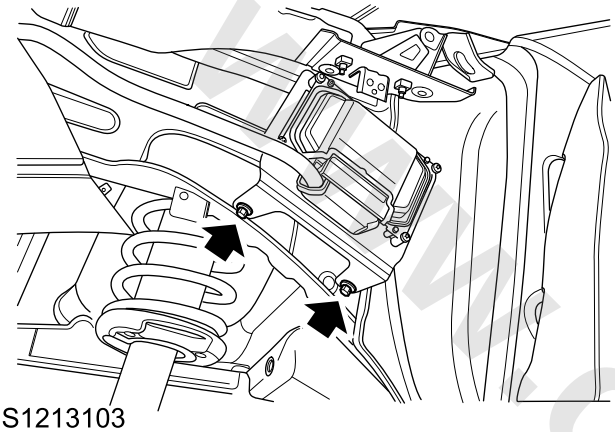

S1213103

5. Remove 4 screws fixing the TCM to its bracket, and remove the TCM.

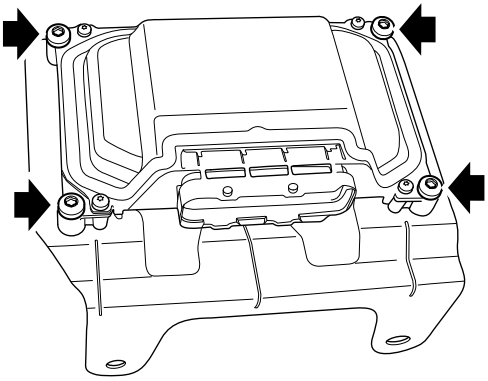

S1213104

Refit

1. Fix the transmission control module to its bracket, fit 4 screws, tighten to **7–10Nm**, and check the torque.
2. Connect the transmission control module connector.
3. Fix the transmission control module bracket to the body, fit 2 bolts, tighten to **19–25Nm**, and check the torque.
4. Fit the left front wheel house liner.

☞ **Front Wheelhouse Liner Refit**

5. Connect the battery negative.
6. Programme and code the **TCM**.

☞ **TCM Replacement**

Dual Clutch Automatic Transmission Fluid - Drain and Refill

Drain

1. Remove the bottom deflector.

☞ **Bottom Deflector Remove**

2. Place a suitable container below the transmission to collect the transmission fluid.
3. Check the surrounding area of each oil plug for oil leakage, replace the faulty oil plug or seal gasket as necessary.
4. Clean 2 oil drain plugs (B, C) and their surrounding areas.
5. Remove 2 oil drain plugs (B, C) and discard the seal gaskets.
6. Drain the oil.

Warning: Observe due care when draining gearbox fluid as the fluid can be very hot.

Refill

Caution: Only use appointed transmission oil. Do not add any additives.

Caution: Do not reuse the drained transmission oil.

1. Fit new seal gasket to the drain plug (B and C), tighten the drain plug to **57–63Nm** and remove the oil stain around the plug.

Caution: Detect the flange surface quality of the oil plug, and change for new plug if there is any knock marks or deformation.

2. Remove the oil level plug (A) and discard the seal gasket.
3. Lower the vehicle, clean the surrounding area of the oil filler, remove the oil filling plug and discard the seal gasket.

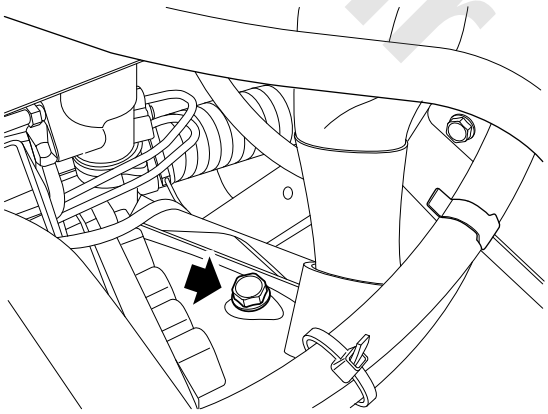

4. Fill the transmission fluid through the oil filler with the **TPT00059**.

www.cargeek.ir

www.cargeek.ir

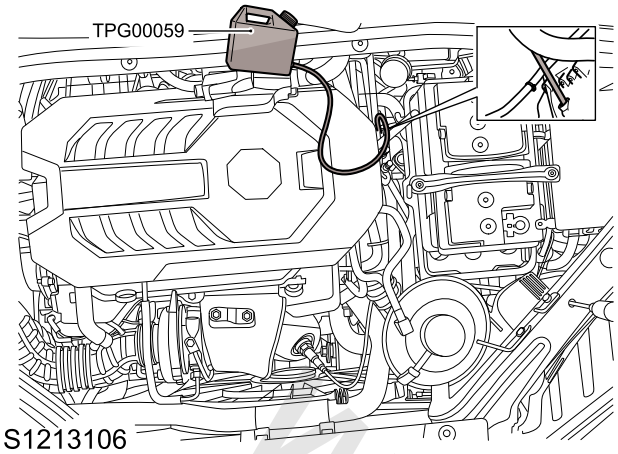

5. Check the transmission fluid level.

☞ **Transmission Fluid Check and Refill**

Dual Clutch Automatic Transmission Fluid - Fluid Level Check and Refill

Check

Caution: Only use appointed transmission oil. Do not add any additives.

Caution: Do not reuse the drained transmission oil.

1. Remove the bottom deflector.

☞ **Bottom Deflector Remove**

2. Check the surrounding area of each oil plug for oil leakage, replace the faulty oil plug or seal gasket as necessary.
3. Raise the vehicle to have wheels off the ground.
4. Start the engine in "P" gear and keep it running at idle speed.
5. Depress the brake pedal, shift the gear in the following sequence: R-N (twice), N-D (twice), D-W (twice), During shifting, the brake pedal is always depressed. After the operation, shift to "N" gear.
6. Depress the brake pedal, shift to "R" gear, release the brake pedal, allow the wheels to rotate for about 10 seconds; depress the brake pedal until the wheels stop rotating, then release the brake pedal and allow the wheels to rotate for about 10 seconds again.

Warning: All the staff shall be away from the rotary parts to avoid personal injury.

7. Depress the brake pedal, shift to "W" gear, release the brake pedal and allow the wheels to rotate for about 10 seconds; depress the brake pedal until the wheels stop rotating, then release the brake pedal and allow the wheels to rotate for about 10 seconds again.

Warning: All the staff shall be away from the rotary parts to avoid personal injury.

8. Connect the scan tool, ensure that the valve body temperature is already between 35–45°C.

- If the valve body temperature is lower than 35°C, repeat step 6 until the valve body temperature is between 35–45°C;
- If the valve body temperature is higher than 45°C, turn off the engine, repeat step 3, 4, 5 and 6 after it is cooled to room temperature until the valve body temperature is between 35–45°C;

9. Depress the brake pedal until the wheels are fully stopped, shift to "P" gear, and keep the engine running at idle speed.
10. Remove the oil plug (A), and place an appropriate container under the transmission.

www.cargeek.ir

www.cargeek.ir

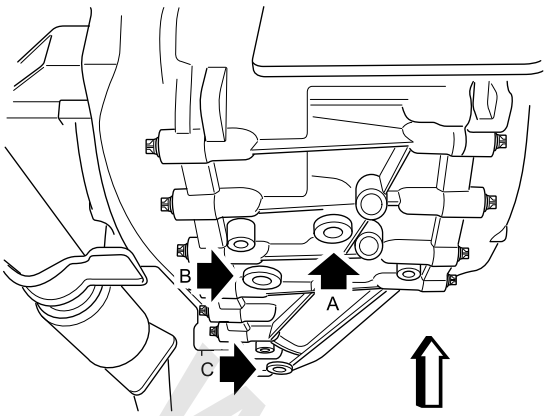

11. Check if any fluid overflows as drops from the oil level port.

- If overflow occurs, finish the operation and turn off the engine. clean the oil plug (A), fit a new seal gasket, tighten to **57–63Nm** and remove the oil stain around the oil plug.

Warning: Observe due care when draining gearbox fluid as the fluid can be very hot.

Caution: Detect the flange surface quality of the oil plug, and change for new plug if there is any knock marks or deformation.

- If no fluid overflows, refill an appropriate transmission fluid.

☞**Dual Clutch Automatic Transmission Fluid Refill**

Refill

1. Lower the vehicle, clean the surrounding area of the oil filler, remove the oil filling plug and discard the seal gasket.
2. With the **TPT00059**, refill transmission fluid through the oil filler until the fluid overflows as drops from the oil level hole at position A. Then turn off the engine to complete the refill.

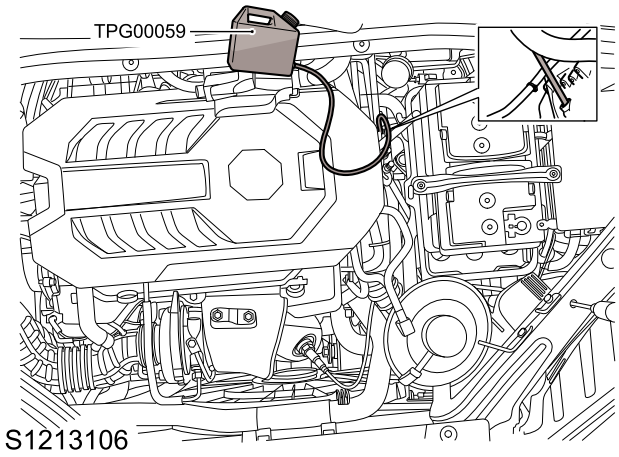

3. Clean the oil level plug (A), fit a new seal gasket and tighten to **57–63Nm**, then clean the oil stain around the oil plug.

Caution: Detect the flange surface quality of the oil plug, and change for new plug if there is any knock marks or deformation.

4. Fit the oil filler plug and a new seal gasket, tighten to **57–63Nm**, and clean the oil stain around the oil plug.

Caution: Detect the flange surface quality of the oil plug, and change for new plug if there is any knock marks or deformation.

5. Fit the bottom deflector.

☞**Bottom Deflector Refit**

www.cargeek.ir

www.cargeek.ir

Differential Oil Seal - Transmission Housing

Removal

1. Drain the transmission oil.

Draining of TST Oil

2. Remove left drive shaft assembly.

Removal of Left Drive Shaft Assembly

3. Insert the jaw at the front end of **TPT00117** into the steel ring frame of the oil seal, secure the jaw and impact the oil seal with a ram.

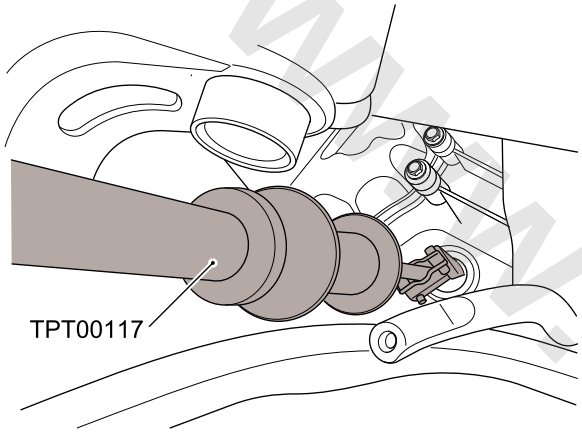

4. Remove and discard the oil seal.

Refit

1. Apply designated transmission oil on the oil seal lip with clean finger.
2. Fit the new oil seal into the transmission housing with **TPT00118** and hammer.

Caution: Take care not to damage the oil seal.

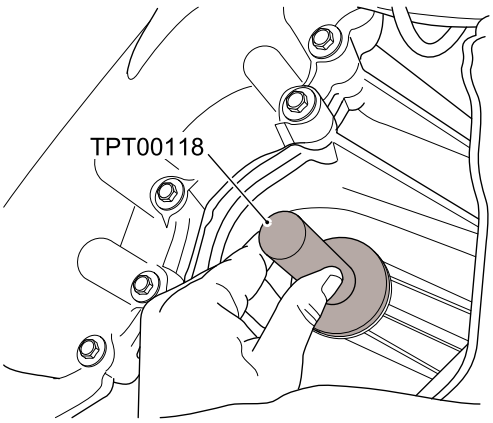

3. Fit left drive shaft assembly.

Refit of Left Drive Shaft Assembly

4. Refill the transmission oil and check the oil level.

Refilling of TST Oil

Differential Oil Seal -Clutch Housing

Removal

1. Drain the transmission oil.

Draining of TST Oil

2. Remove right drive shaft assembly.

Removal of Right Drive Shaft Assembly

3. Insert the jaw at the front end of **TPT00117** into the steel ring frame of the oil seal, and impact the oil seal with a ram.

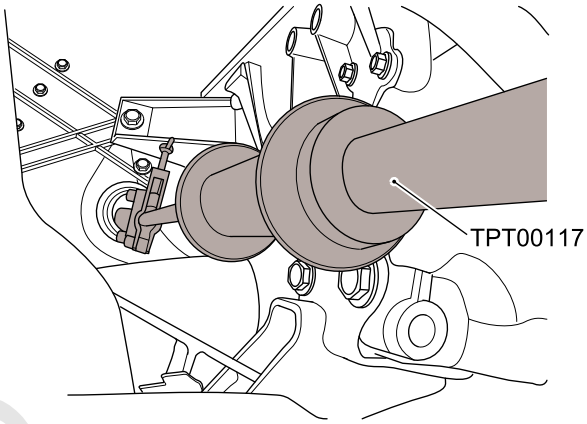

4. Remove and discard the oil seal.

Refit

1. Apply the transmission oil on the oil seal lip with clean finger.
2. Fit the new oil seal into the transmission housing with **TPT00118** and hammer.

Caution: Take care not to damage the oil seal.

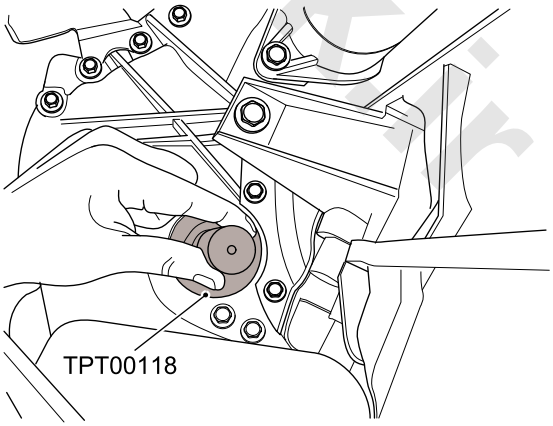

3. Fit right drive shaft assembly.

Refit of Right Drive Shaft Assembly

4. Refill the transmission oil and check the oil level.

Refilling of TST Oil

www.cargeek.ir

www.cargeek.ir

Pressure Filter

Remove

Tip: Oil pressure filter and O ring of oil pressure filter cover should replaced per 60,000 kilometers.

1. Remove the throttle intake pipe.

☞**Throttle Intake Pipe Remove**

2. Remove 1 bolt fixing the oil cooler pipe clip to the automatic transmission.
3. Loosen the pressure filter cover, keep away from the transmission oil cooler pipe, and take away the pressure filter cover. If the pressure filter cover shall be replaced, the O ring shall also be replaced.

Caution: Do not use the pneumatic or electrical tool to remove or fit pressure filter cover, otherwise the pressure filter cover will be damaged.

4. Pull out the pressure filter element slowly, handle with care to allow the residual oil in the element to drop back into the transmission instead of dropping on the transmission housing.

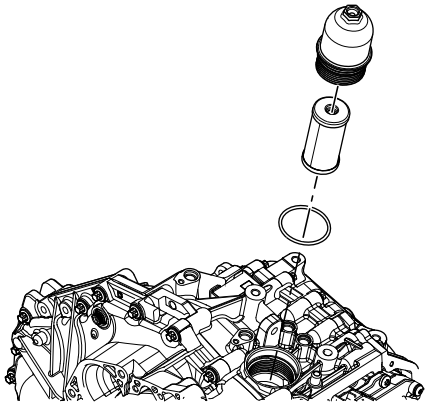

Refit

1. Apply the specified transmission oil to the O ring of the pressure filter element.
2. Insert the new pressure filter element into the hole on the transmission housing and fit it properly.
3. Check if the O ring on the pressure filter cover is in good condition, and replace it if necessary.
4. Fit the O ring to the pressure filter cover and check if it is properly fitted, then apply transmission oil to the O ring and the thread of the pressure filter cover.
5. Fit the pressure filter cover to the transmission housing, and pretighten manually until the O ring touches the flange surface of the transmission housing. If the part is stuck during pretightening, stop the operation and turn it counterclockwise to remove it immediately, then check the O ring or thread for any damage, if it is damaged, replace it.
6. With torque wrench, tighten the pressure filter cover to **38–42Nm** at a constant speed of 10s/rev. Wrenches with digital display or pointer are recommended for this operation.

Warning: Take care to tighten the pressure filter cover within specified value, if not transmission oil will spray from transmission. The sprayed oil may result fire in hot condition!

Caution: Do not use the pneumatic or electrical tool to remove or fit pressure filter cover, otherwise the pressure filter cover will be damaged.

7. After the part is tightened, mark the mating face of the housing and pressure filter cover with a marker.
8. Fit 1 bolt fixing the oil cooler pipe clip to the automatic transmission, tighten to **7–10Nm** and check the torque.
9. Fit the throttle intake pipe.

☞**Throttle Intake Pipe Refit**

www.cargeek.ir

www.cargeek.ir

Parking Brake Cable Bracket

Remove

1. Place the shift lever in "P" gear.
2. Disconnect the cable ball joint at the transmission side from the parking brake cable rocker arm.
3. Release C-clip from the transmission cable bracket, and release the cable support.

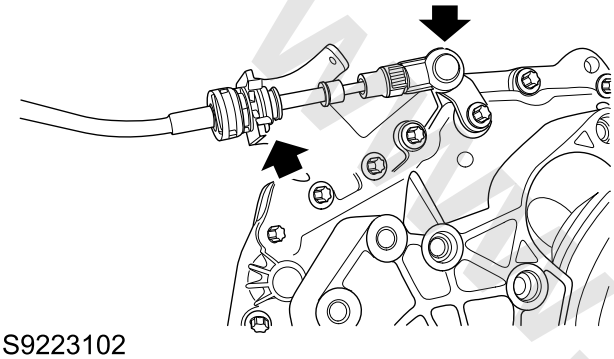

S9223102

4. Remove the parking brake cable from the parking brake cable bracket.
5. Remove 2 bolts fixing the parking brake cable bracket to the transmission housing to remove the parking brake cable.

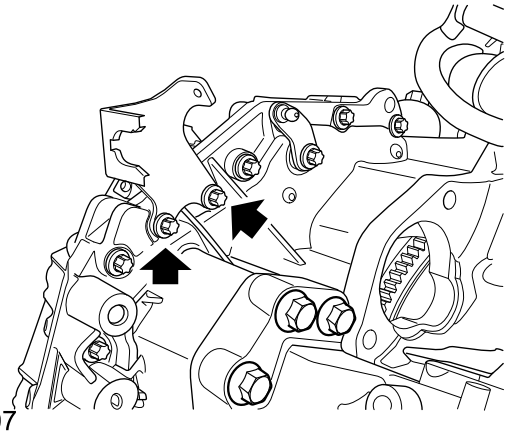

S1213107

Refit

1. Fix the parking brake cable bracket to the transmission housing, fit 2 bolts, tighten to **38–42Nm**, and check the torque.
2. Fit the cable ball joint at the transmission side to the parking brake cable rocker arm.
3. Locate the parking brake cable to its bracket and secure with C-clip.
4. Adjust the parking brake cable.

☞ **Parking Brake Cable Adjustment**

Parking Brake Cable Shaft Rocker Arm

Remove

1. Move the shift lever to "P" gear.
2. Raise the vehicle on a lift.

Warning: Do not work on or under a vehicle supported only by a jack. Always support the vehicle on safety stands.

3. Disconnect the ball joint of the parking brake cable from the rocker arm of the parking brake cable shaft.

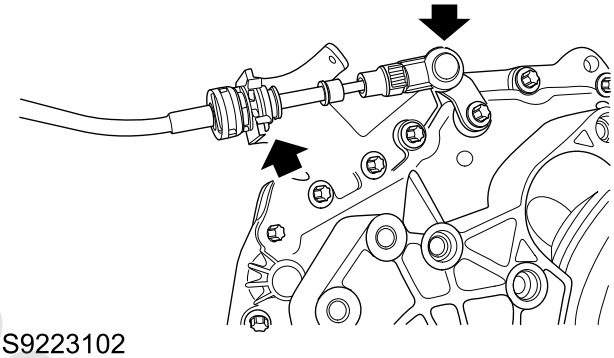

S9223102

4. Remove and discard 1 bolt fixing the rocker arm of the parking brake cable shaft to the rocker arm shaft.

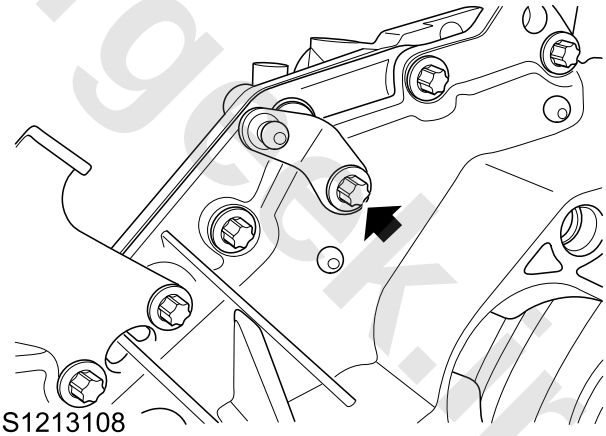

S1213108

5. Remove the rocker arm of the parking brake cable shaft.

Refit

1. Ensure the shift lever is in "P" gear.
2. Fix the rocker arm of the parking brake cable shaft to the rocker arm shaft, fit 1 new bolt, tighten to **19–21Nm** and check the torque.
3. Rotate the rocker arm of the parking brake cable shaft to the towards the "P" mark on the transmission housing, then rotate the front wheels or push the vehicle to move (displacement of the vehicle shall not exceed 20cm), until a "click" can be heard or the two front wheels cannot turn towards one direction. This indicates that the parking pawl has snapped into the parking gear teeth completely.

www.cargeek.ir

4. Fit the ball joint of the parking brake cable to the rocker arm knob of the parking brake cable shaft.
5. Check/adjust the parking brake cable.

Parking Brake Cable Check/Adjustment

Oil Seal - Parking Brake Cable Shaft

Removal

1. Remove starter motor.

Removal of starter motor

2. Remove the parking brake cable shaft rocker arm.

Removal of Parking Brake Cable Shaft Rocker Arm

3. Pry up the parking brake cable shaft oil seal with **TPT00141** carefully and discard it.

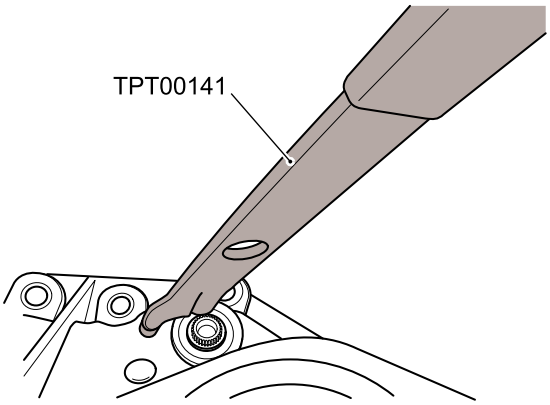

Refit

1. Place the guide of **TPT00140** on the cable shaft.
2. Apply some transmission oil to oil seal lip by clean finger.
3. Put the new oil seal of the guide of **TPT00140**.
4. Do not make the oil seal tilt, tap it in place with the punch of **TPT00140**.

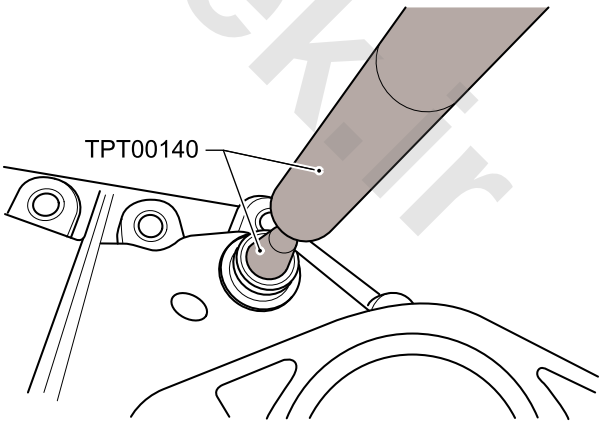

5. Refit the parking brake cable shaft rocker arm.

Refit of Parking Brake Cable Shaft Rocker Arm

6. Fit starter motor.

Refit starter motor

www.cargeek.ir

www.cargeek.ir

Reverse Gear Shaft Sealing Cap

Remove

1. Remove the left front wheel house liner.

☞ **Front Wheel House Liner Remove**

2. With a punch and hammer, punch a hole in the center of the reverse shaft seal cover.

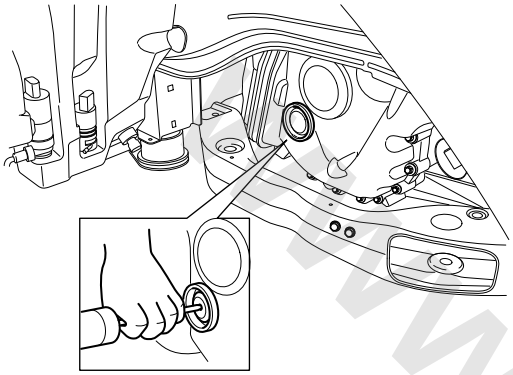

S1213205

3. Insert one end of the needle nose pliers into the hole in the center of the reverse shaft seal cover, remove and discard the seal cover of the reverse shaft.

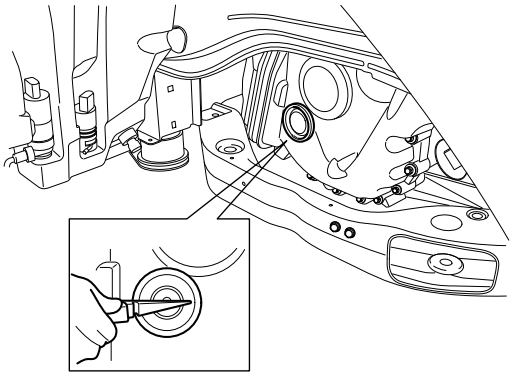

S1213206

Refit

1. Remove the dust around the mounting hole/housing of the reverse shaft seal cover.
2. Apply transmission oil to the rubber part of the new seal cover, push it into the transmission housing by hand and ensure the outer metal ring of the seal cover is flush with the housing surface.
3. Fit the reverse shaft seal cover with the **TPT00221**.

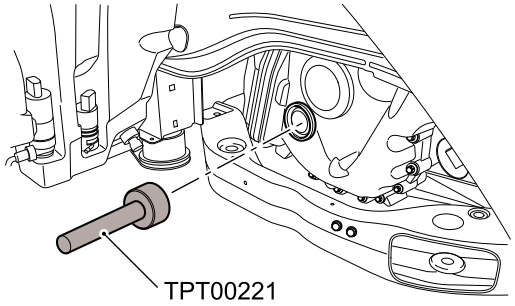

S1213207

4. Check if the reverse shaft seal cover is level.
5. Fit the left front wheel house liner.

Front Wheel House Liner Refit

6. Perform a road test and check for leak. Ensure the part is properly fitted.

www.cargeek.ir

www.cargeek.ir

Special Tools

Tool Number	Description	Picture
T10007	Engine lift bracket	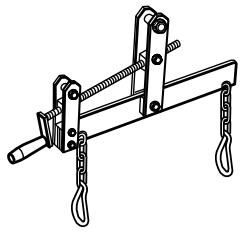 T10007
TEN00070	Engine support	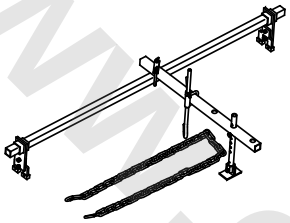 TEN00070
TPT00059	Transmission fluid fill equipment	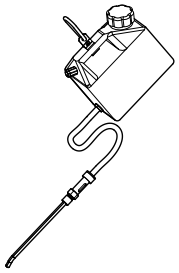 TPT00059
TPT00117	Remover driveshaft oil seal	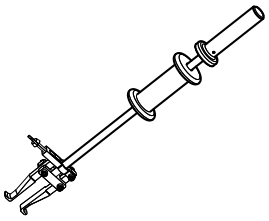 TPT00117
TPT00118	Replacer driveshaft oil seal	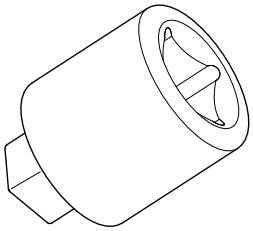 TEN00118

Tool Number	Description	Picture
TPT00141	Remover park shaft oil seal	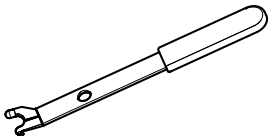 TPT00141
TPT00140	Replacer park shaft oil seal	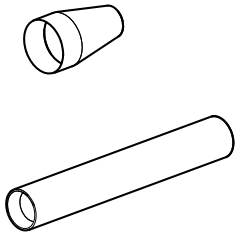 TPT00140
TPT00221	Replacer cover assembly-reverse idler shaft	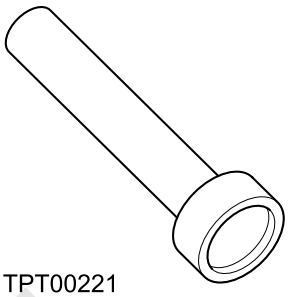 TPT00221

www.cargeek.ir

www.cargeek.ir

Dry Dual Clutch Automatic Transmission-7 Speed

Specifications

Torque

Description	Value
Oil drain plug	7–14Nm
Oil over flow plug	7–14Nm
Bolt-hose CAC to engine	7–10Nm
Bolt - lower tie rod mounting bracket to transmission	97–110Nm
Bolt - engine to transmission	49–67Nm
Bolt - transmission mounting to body	55-65Nm
Bolt - transmission bracket to transmission bracket	90-110Nm
Nut - transmission bracket to transmission bracket	90-110Nm
Bolt - transmission to engine	49–67Nm
tangential fastener	30–35Nm
Bolt - closed on board to transmission	7.5–10.5Nm
Bolt-catalysts fixing bracket to catalysts	19–25Nm
Bolt-catalysts fixing bracket to transmission	49–67Nm
Bolt -oxygen sensor bracket to transmission	22–28Nm
Bolt -battery bracket to body	40-50Nm
Bolt - bond strap to transmission	7.5–10.5Nm
Nut -transmission harness to TCM	8–10Nm
Bolt - TCM to transmission control codule	7.5–10.5Nm
Bolt- expansion tank to body	4–6Nm
Bolt - transmission control codule to transmission	7.5–10.5Nm
Bolt -battery tray bracket	19-25Nm
Bolt - shift fork position sensor to transmission control codule	7.5–10.5Nm
Bolt - automatic transmission input speed sensor to transmission control codule	7.5–10.5Nm
Bolt - transmission control module wiring harness to transmission control codule	7.5–10.5Nm
Bolt - clutch actuator cylinder to clutch housing	12.5–14.5Nm
Bolt - clutch actuator cylinder position sensor wiring harness cover to clutch housing	7.5–10.5Nm
Nut - shift arm to manual shift shaft	10–14Nm
Bolt - fluid trough to transmission housing	7.5–10.5Nm
Bolt - input shaft bearing retainer to transmission housing	7.5–10.5Nm
Bolt - output speed sensor to transmission housing	7.5–10.5Nm
Bolt - park pawl actuator bracket to transmission housing	7.5–10.5Nm
Bolt - park pawl actuator bracket to transmission housing	7.5–10.5Nm
Bolt - manual shaft detent lever spring to transmission housing	7.5–10.5Nm
Bolt - clutch housing to transmission housing	35–40Nm
Bolt - fluid trough to clutch housing	7.5–10.5Nm

www.cargeek.ir

www.cargeek.ir

Description	Value
Bolt - input shaft bearing retainer to clutch housing	7.5–10.5Nm
Bolt - input shaft bearing retainer to input shaft	40–50Nm

www.cargeek.ir

www.cargeek.ir

Parameter

Type	7-speed dry dual clutch automatic transmission
Transmission Arrangement Form	Transverse Mount
Speed ratio:	2WD/AWD
Gear	7 forward gears and 1 reverse gear
·1	4.231
·2	2.476
·3	1.389
·4	0.929
·5	0.755
·6	0.714
·7	0.566
·R	3.882
·1267 output shaft final drive driving gear	4.563
·345R output shaft final drive driving gear	3.214
Maximum input torque	250Nm
Maximum input speed	7000 rpm
Gear Division	P,R,N,D,W,Tiptronic
Housing Material	Die-casting Aluminum
Transmission Net Weight (with Oil)	78kg
Lubricating Oil	
• Model	DEXRON®DCT Fluid
• Approximate Capacity	2.45 L
Hydraulic Oil	
• Model	Pentosin
• Approximate Capacity	1.90 L

www.cargeek.ir

www.cargeek.ir

www.cargeek.ir

Description and Operation

System Layout

Drawing of Dry Dual Clutch Automatic Transmission Assembly

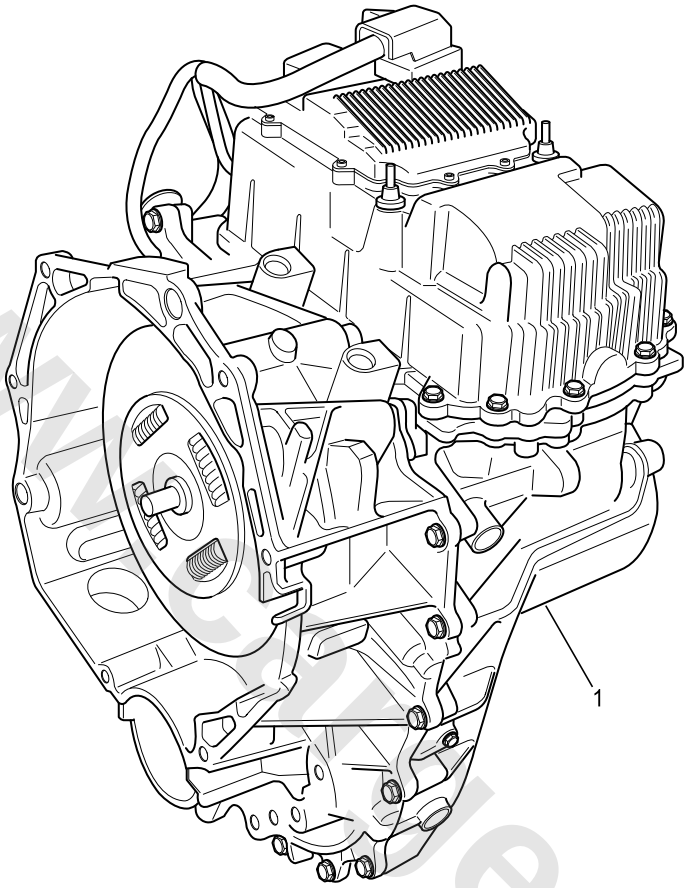

S1210111

www.cargeek.ir

www.cargeek.ir

www.cargeek.ir

1. Dry Dual Clutch Automatic Transmission - 2WD

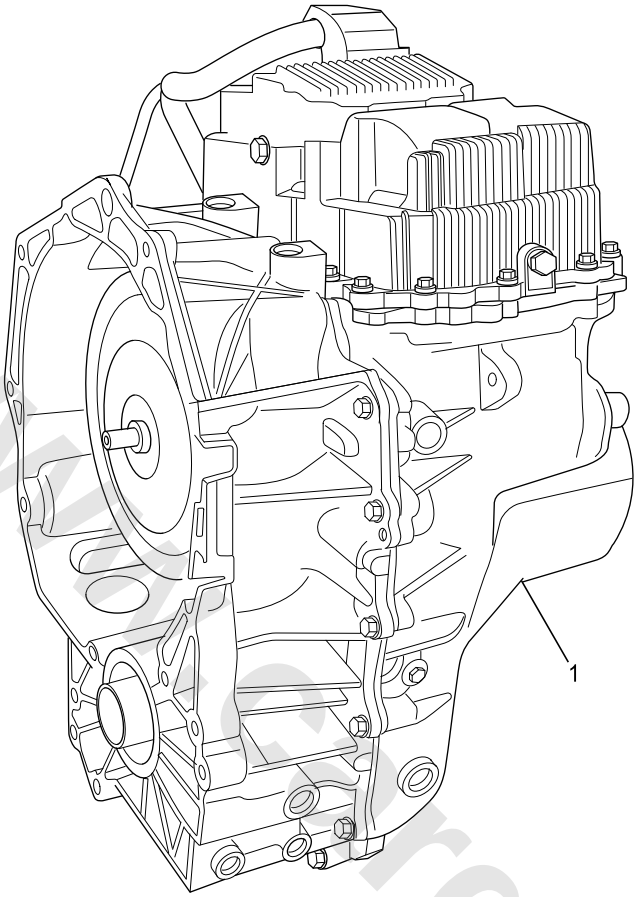

S1210106

www.cargeek.ir

www.cargeek.ir

www.cargeek.ir

1. Dry Dual Clutch Automatic Transmission -AWD

Diagram of Dry Dual Clutch Automatic Transmission Refit

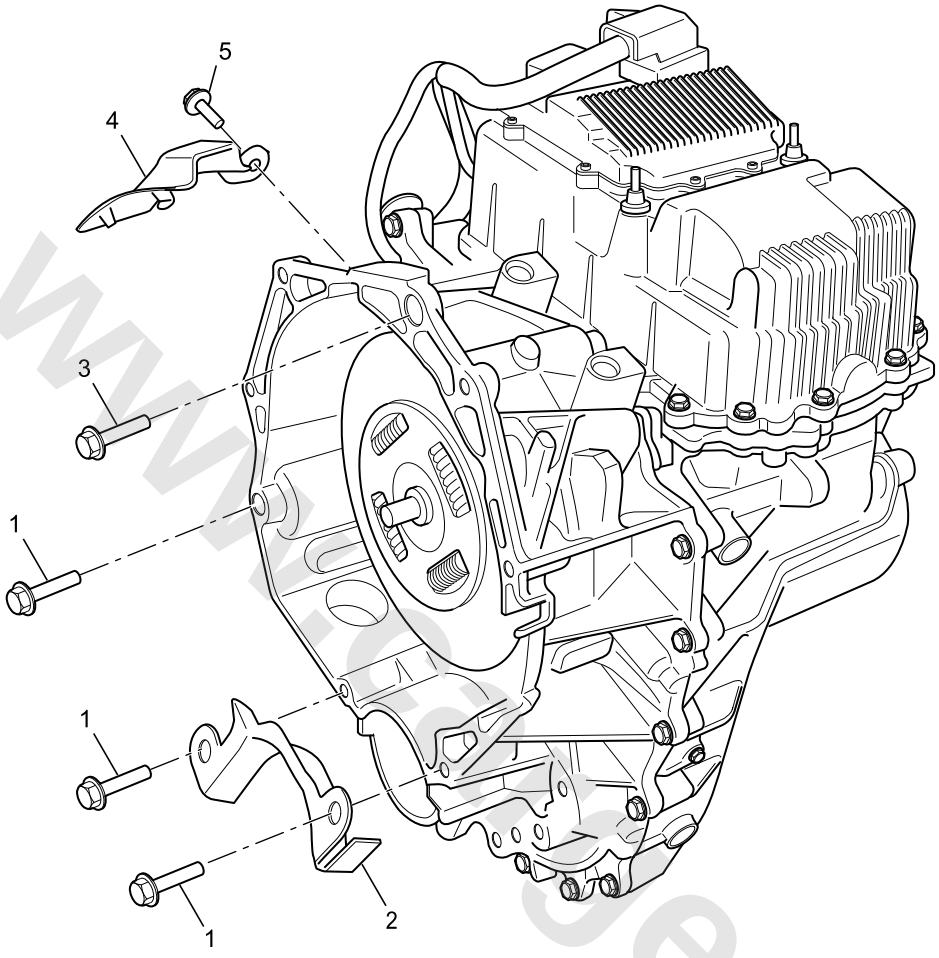

1. Transmission Mounting Bolt
2. Front Closing Panel
3. Transmission Mounting Bolt
4. Upper Closing Panel
5. Bolt - Upper Closing Panel

www.cargeek.ir

www.cargeek.ir

Layout of Dry Dual Clutch Automatic Transmission Accessories

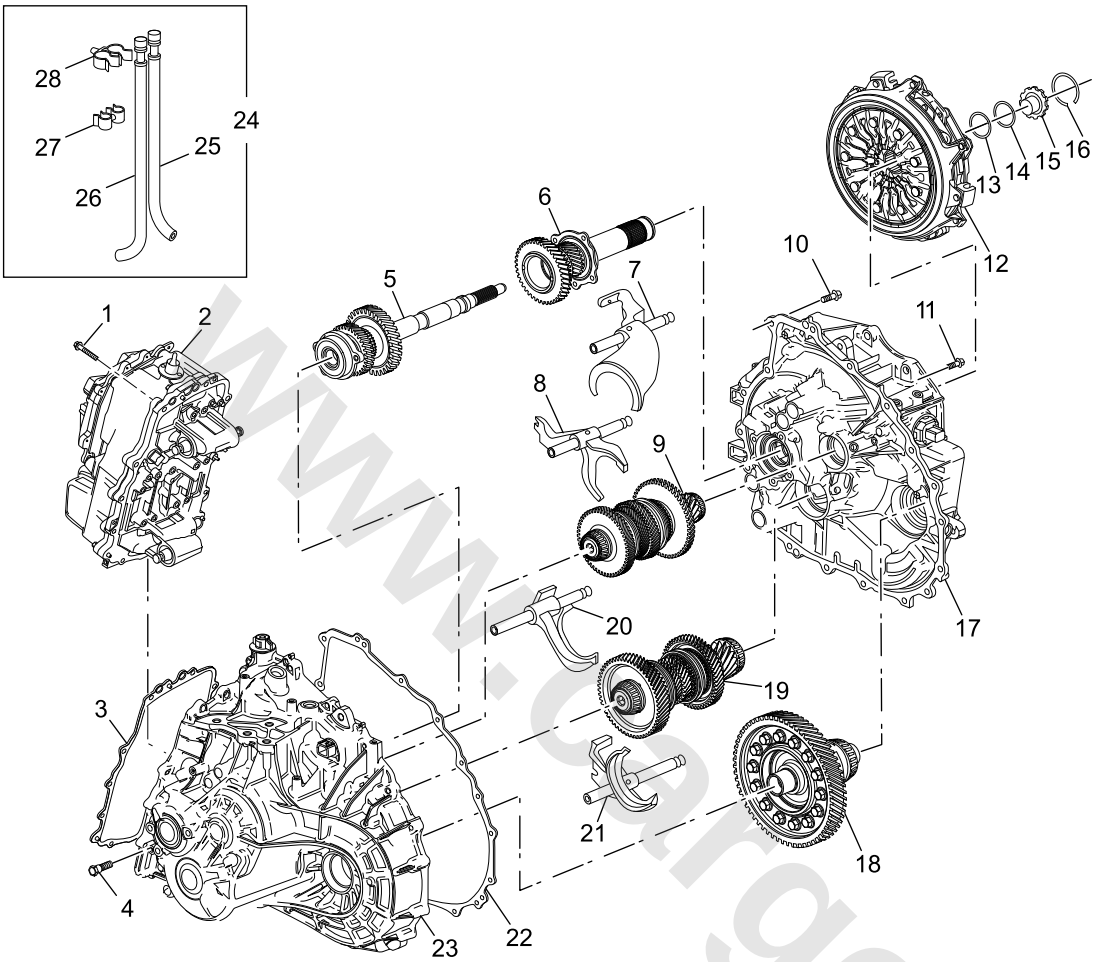

S1210113

1. Bolt - Automatic Transmission Hydraulic Module and Control Module Assembly to Transmission Housing
2. Automatic Transmission Hydraulic Module and Control Module Assembly
3. Gasket - Hydraulic Module Assembly to Transmission Housing
4. Input Shaft Bearing Cover Bolt - Transmission Housing
5. 1357 Input Shaft Assembly
6. 246R Input Shaft Assembly
7. 35 Shifting Fork
8. 4R Shifting Fork
9. 345R Output Shaft Assembly (Upper Intermediate Shaft)
10. Bolt - Clutch Housing to Transmission Housing
11. Input Shaft Bearing Cover Bolt - Clutch Housing
12. Dual Clutch Assembly
13. Input Shaft Bearing Gasket
14. Snap Ring
15. Gear Hub Assembly - Clutch Driven Hub
16. Snap Ring
17. Clutch Housing
18. Differential Assembly
19. 1267 Output Shaft Assembly (Lower Intermediate Shaft)
20. 2/6 Gear Shifting Fork
21. 1/7 Gear Shifting Fork
22. Washer - Clutch Housing to Transmission Housing
23. Transmission Housing Assembly
24. Automatic Transmission Breather Pipe Assembly
25. Automatic Transmission Breather Pipe
26. Hydraulic Module Assembly Breather Pipe
27. Clamp between Breather Pipes
28. Breather Pipe to Intercooler Pipe Clamp

www.cargeek.ir

www.cargeek.ir

Exploded View of Transmission Housing 1

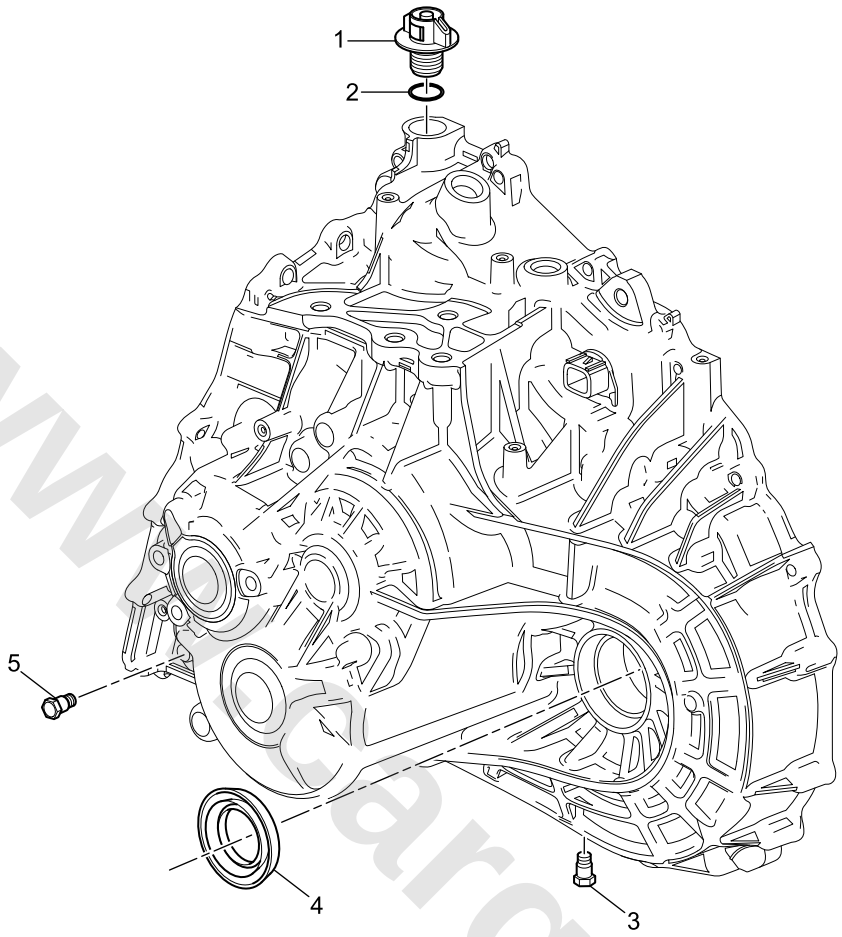

S1210114

1. Oil Filler Plug
2. Oil Filler Plug O-ring
3. Drain Plug
4. Differential Half Axle Oil Seal
5. Oil Level Plug

www.cargeek.ir

www.cargeek.ir

Exploded View of Transmission Housing 2

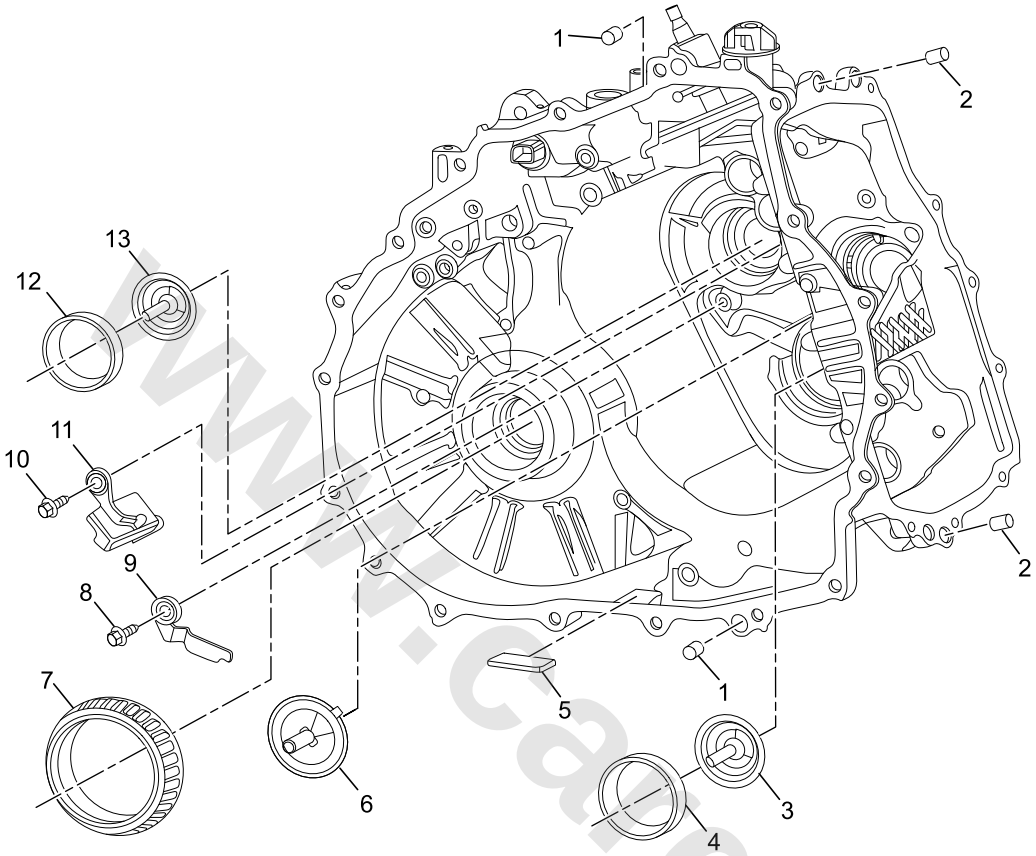

S1210115

1. Transmission Housing Locating Pin
2. Transmission Assembly Locating Pin
3. 1267 Output Shaft Rear Oil Nozzle
4. Outer Ring - 1267 Output Shaft Rear Cone Bearing
5. Magnetic Steel
6. Input Shaft Oil Nozzle
7. Inner Ring - Differential Rear Cone Bearing
8. Bolt - 1267 Output Shaft Oil Guide Groove
9. 1267 Output Shaft Oil Guide Groove
10. Bolt - Input Shaft Oil Nozzle
11. Input Shaft Oil Nozzle
12. Outer Ring - 345R Output Shaft Rear Cone Bearing
13. 345R Output Shaft Rear Oil Nozzle

www.cargeek.ir

Exploded View of Clutch Housing 1

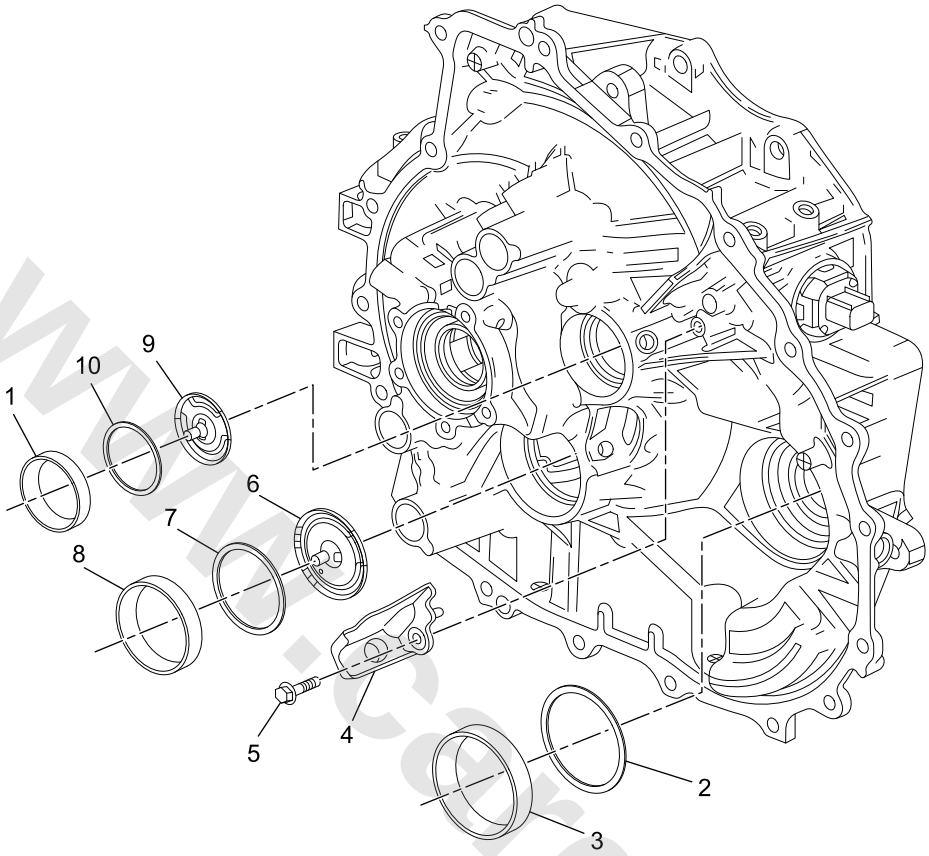

S1210116

1. Outer Ring - 345R Output Shaft Front Cone Bearing
2. Gasket - Differential Front Cone Bearing
3. Outer Ring - Differential Front Cone Bearing
4. 345R Output Shaft Oil Guide Groove
5. Bolt - 345R Output Shaft Oil Guide Groove
6. 1267 Output Shaft Front Oil Deflector
7. Gasket - 1267 Output Shaft Front Cone Bearing
8. Outer Ring - 1267 Output Shaft Front Cone Bearing
9. 345R Output Shaft Oil Deflector
10. Gasket - 345R Output Shaft Front Cone Bearing

www.cargeek.ir

www.cargeek.ir

Exploded View of Clutch Housing 2

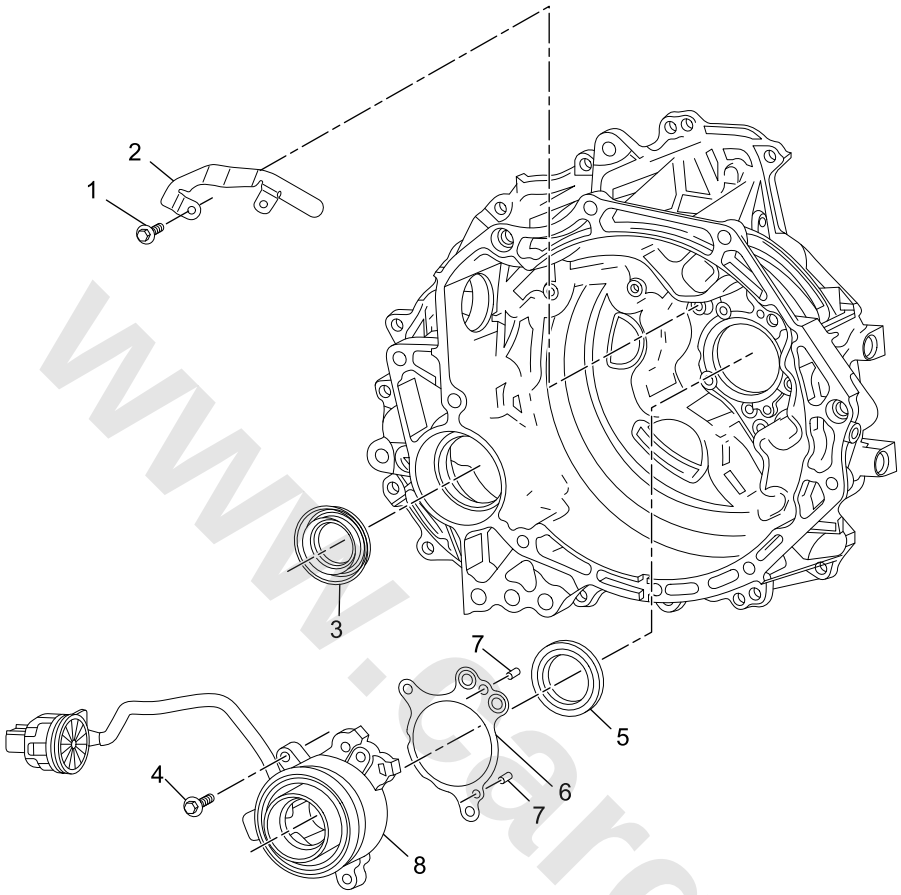

S1210117

1. Bolt - Clutch Actuator Cylinder Harness Cover
2. Cover - Clutch Actuator Cylinder Position Sensor Harness
3. Differential Half Axle Oil Seal
4. Bolt - Clutch Actuator Cylinder Assembly
5. Clutch Housing Oil Seal
6. Gasket - Clutch Actuator Cylinder
7. Locating Pin - Clutch Actuator Cylinder
8. Clutch Actuator Cylinder Assembly

www.cargeek.ir

www.cargeek.ir

Exploded View of Parking System

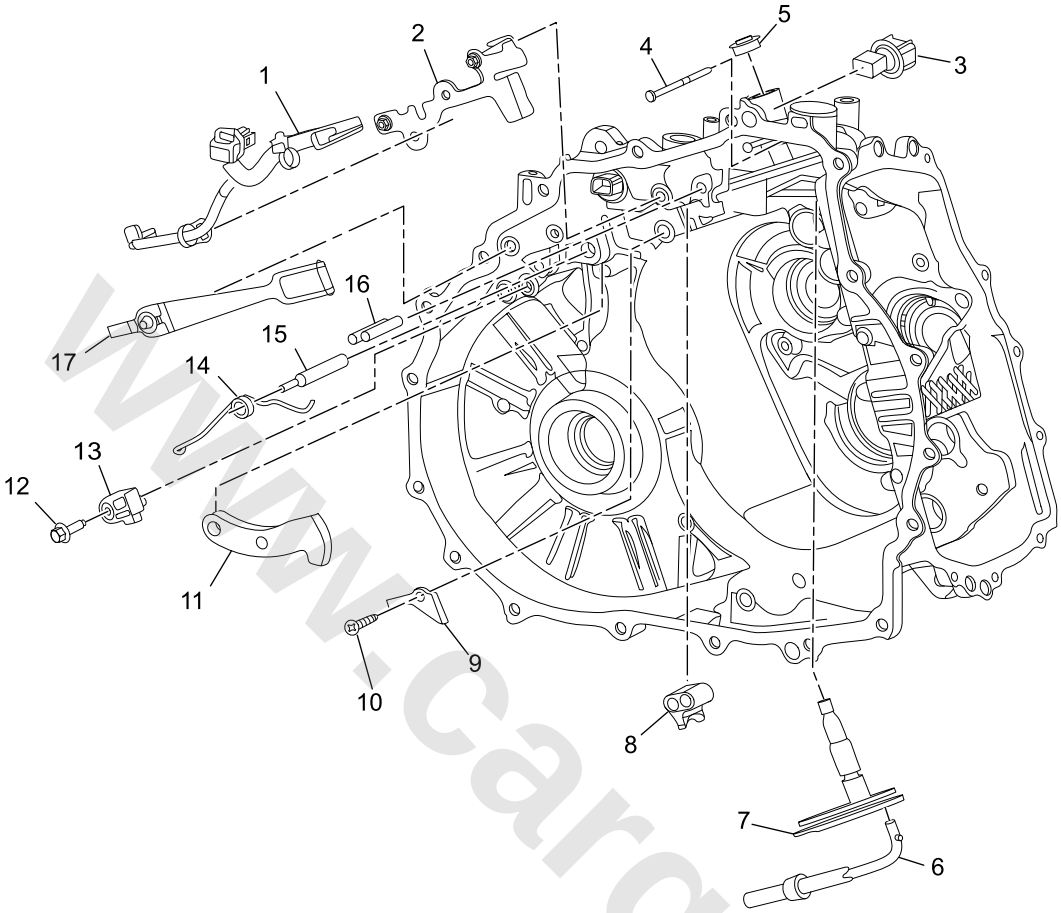

S1210118

1. Transmission Internal Harness Assembly
2. Parking Bracket Assembly
3. Transmission Gearbox through Connector Assembly
4. Shift Shaft Stop Pin
5. Shift Shaft Oil Seal
6. Parking Control Lever Assembly
7. Built-in Mode Switch
8. Guide Pin Bracket
9. Parking Pawl Support
10. Bolt - Parking Actuator Bracket
11. Pawl
12. Bolt - Transmission Output Speed Sensor
13. Transmission Output Speed Sensor
14. Return Spring - Pawl
15. Pawl Shaft
16. Guide Pin
17. Shift Retaining Spring Assembly

www.cargeek.ir

Exploded View of Hydraulic Module and Control Module Assembly

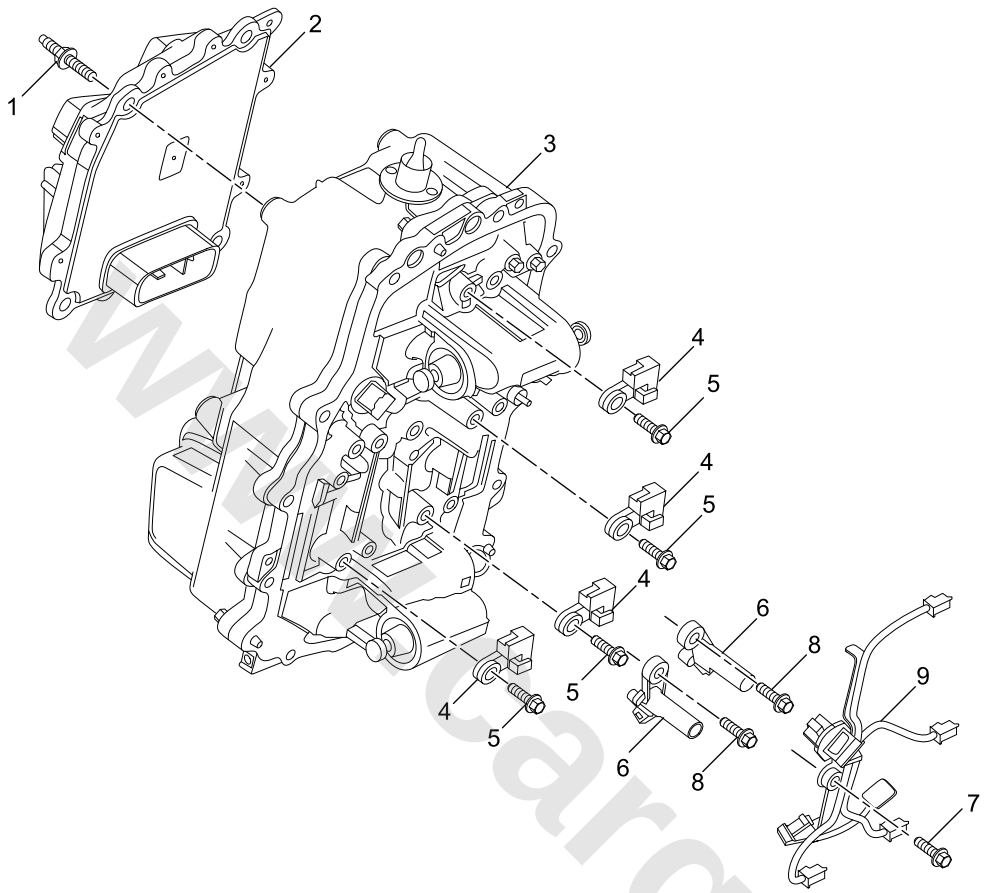

S1210119

1. Bolt
2. Transmission Control Module
3. Transmission Hydraulic Module Assembly
4. Shifting Fork Position Sensor
5. Bolt - Shifting Fork Position Sensor
6. Transmission Input Speed Sensor
7. Bolt - Transmission Hydraulic Module Harness Assembly
8. Bolt - Transmission Input Speed Sensor
9. Transmission Hydraulic Module Harness Assembly

www.cargeek.ir

www.cargeek.ir

Exploded View of 1357 Input Shaft Assembly

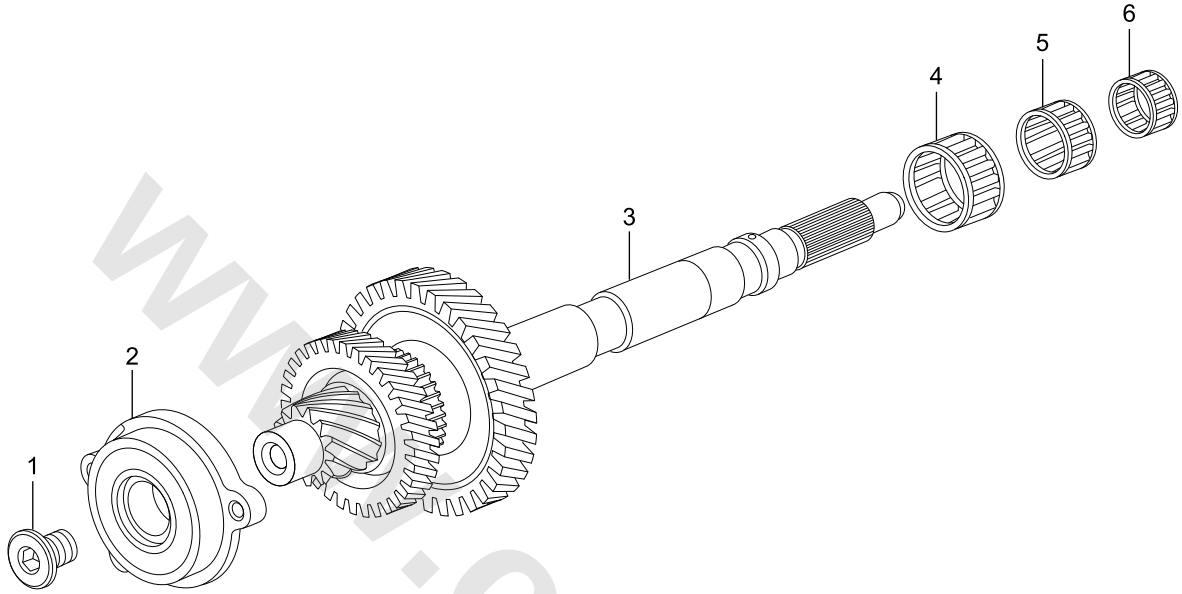

S1210120

1. Input Shaft Bearing Locking Bolt
2. Input Shaft Rear Ball Bearing Cover Assembly
3. 1357 Input Shaft Assembly
4. Input Shaft Large Needle Bearing
5. Input Shaft Middle Needle Bearing
6. Input Shaft Small Needle Bearing

www.cargeek.ir

www.cargeek.ir

www.cargeek.ir

Exploded View of 246R Input Shaft Assembly

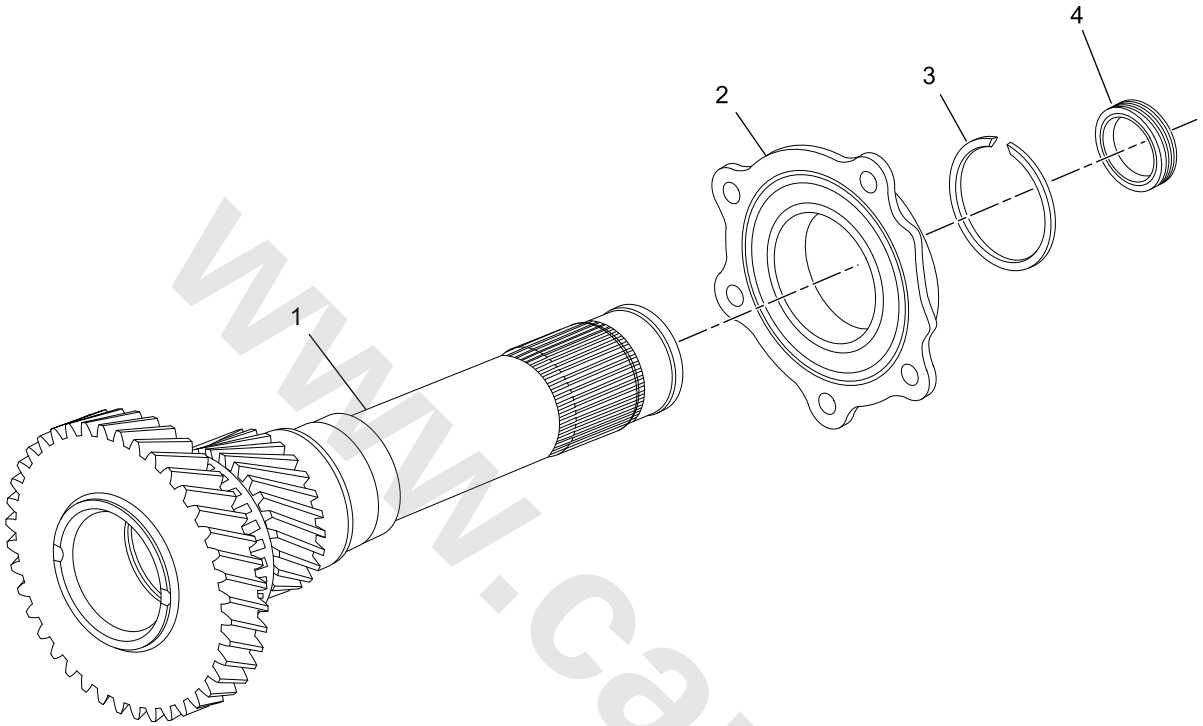

S1210121

1. 246R Input Shaft Assembly
2. Input Shaft Front Ball Bearing Cover Plate Assembly
3. Input Shaft Bearing Circlip
4. Input Shaft Oil Seal

www.cargeek.ir

www.cargeek.ir

Exploded View of 345R Output Shaft Assembly

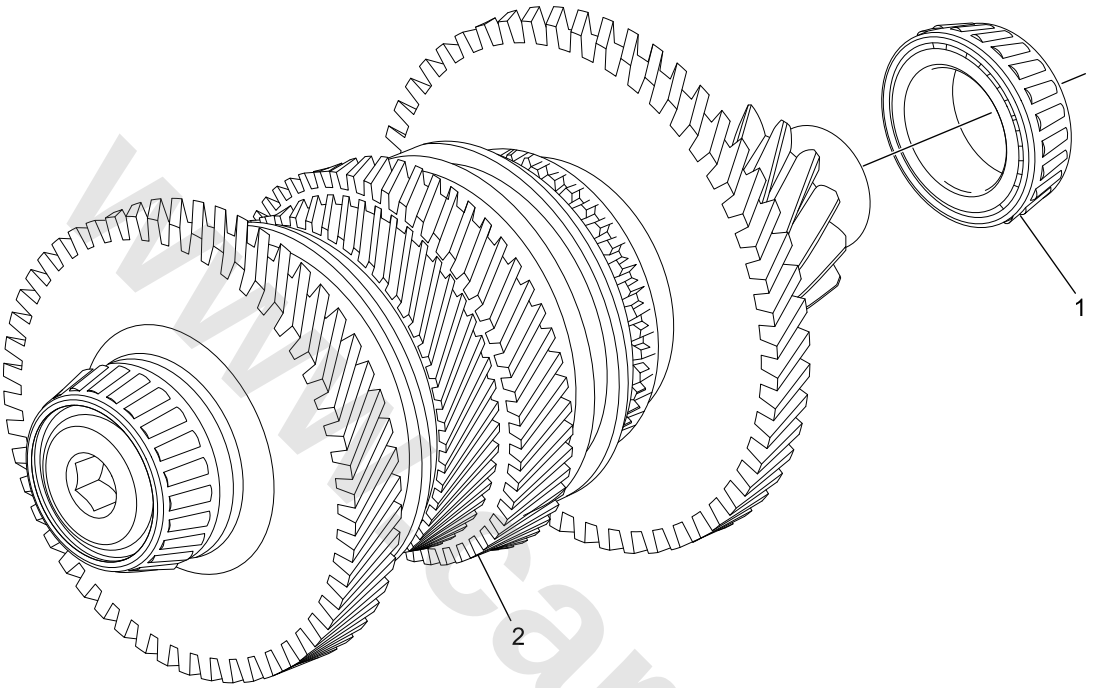

S1210122

1. Inner Ring - 345R Output Shaft Front Cone Bearing
2. 345R Output Shaft Assembly

www.cargeek.ir

www.cargeek.ir

Exploded View of 1267 Output Shaft Assembly

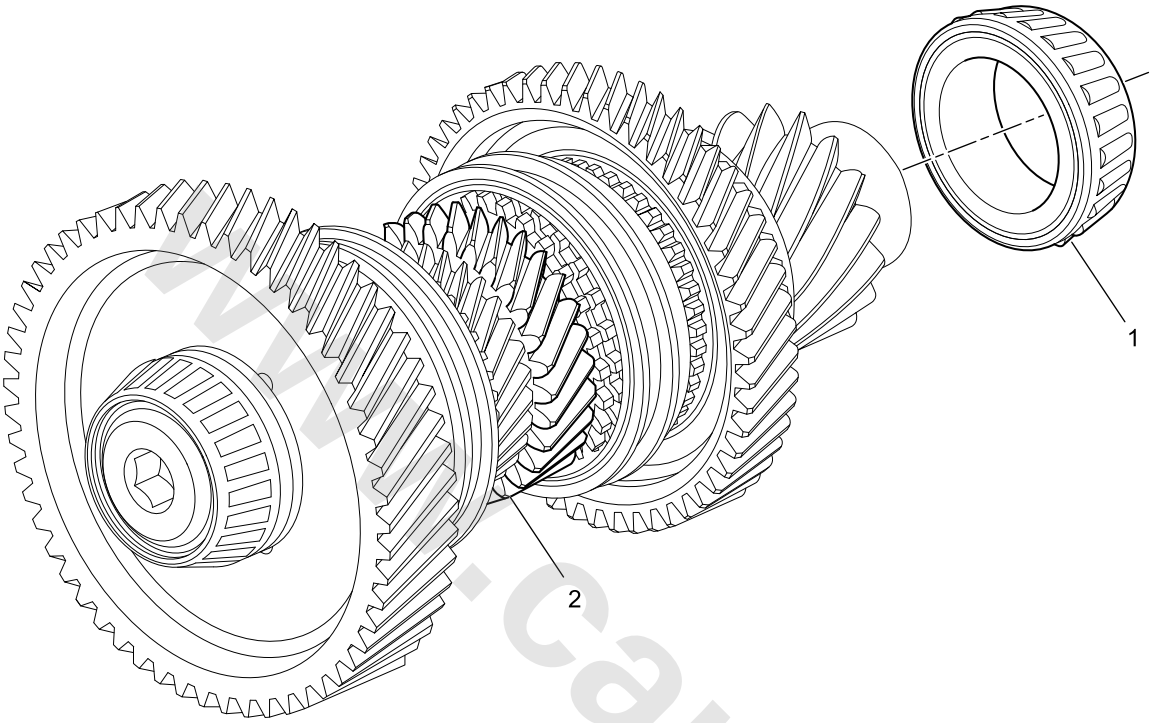

S1210123

1. Inner Ring - 1267 Output Shaft Front Cone Bearing
2. 1267 Output Shaft Assembly

www.cargeek.ir

www.cargeek.ir

www.cargeek.ir

Exploded View of Differential Assembly

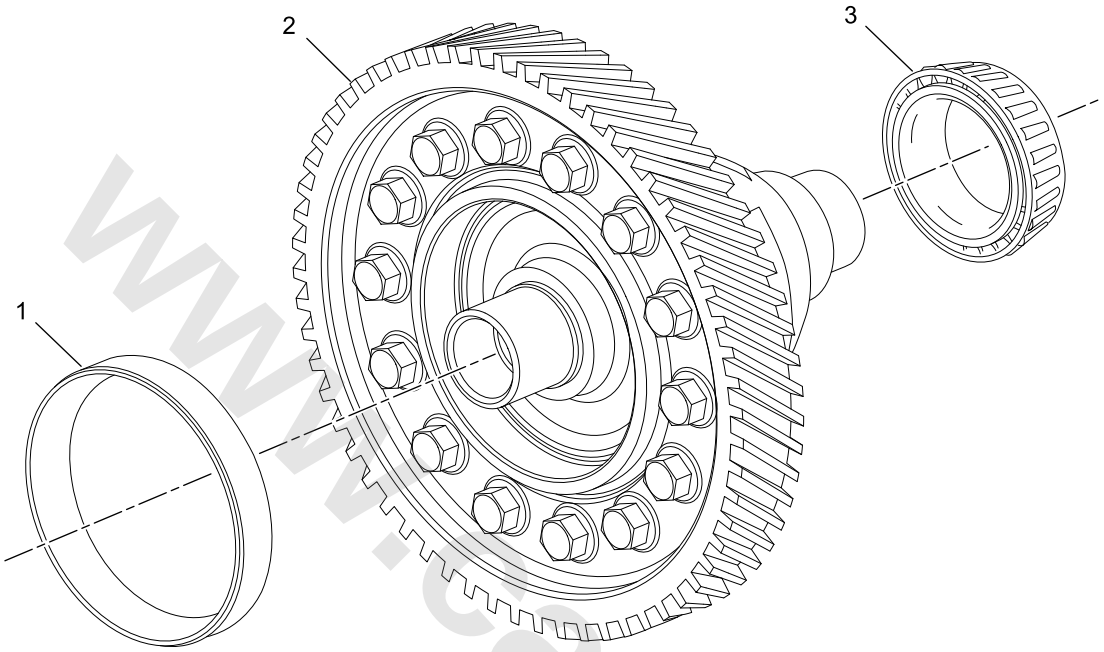

S1210124

1. Outer Ring - Differential Rear Cone Bearing
2. Differential Assembly
3. Inner Ring - Differential Front Cone Bearing

www.cargeek.ir

www.cargeek.ir

Section View of Main Components

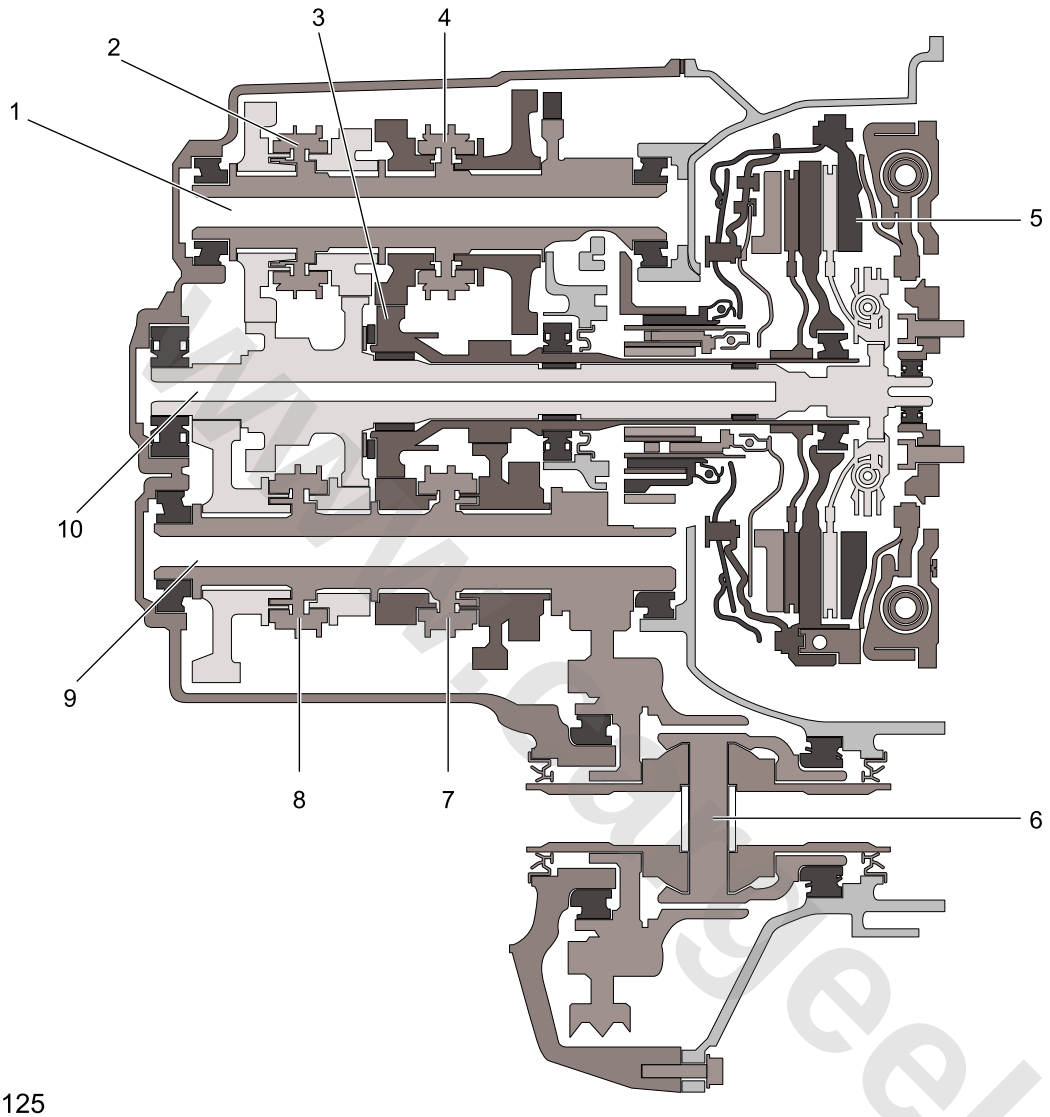

S1210125

1. 345R Output Shaft Assembly
2. 3/5 Gear Shifting Fork
3. 246R Input Shaft Assembly
4. 4/R Gear Shifting Fork
5. Dual Clutch Assembly
6. Differential Assembly
7. 1/7 Gear Shifting Fork
8. 2/6 Gear Shifting Fork
9. 1267 Output Shaft Assembly
10. 1357 Input Shaft Assembly

www.cargeek.ir

www.cargeek.ir

System Control Diagram

Automatic Transmission Control Diagram

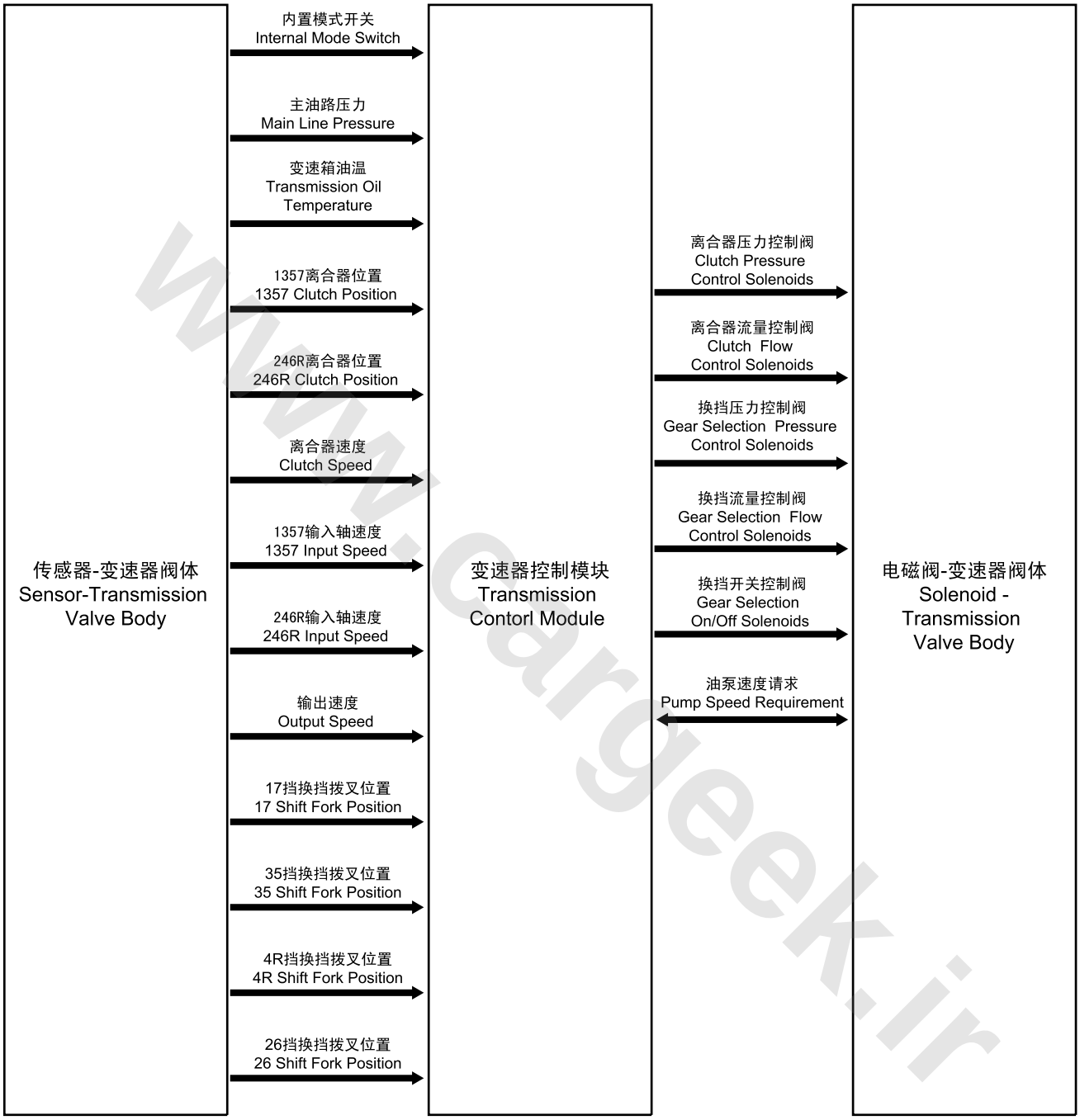

S1211006

A = Hard Wire

www.cargeek.ir

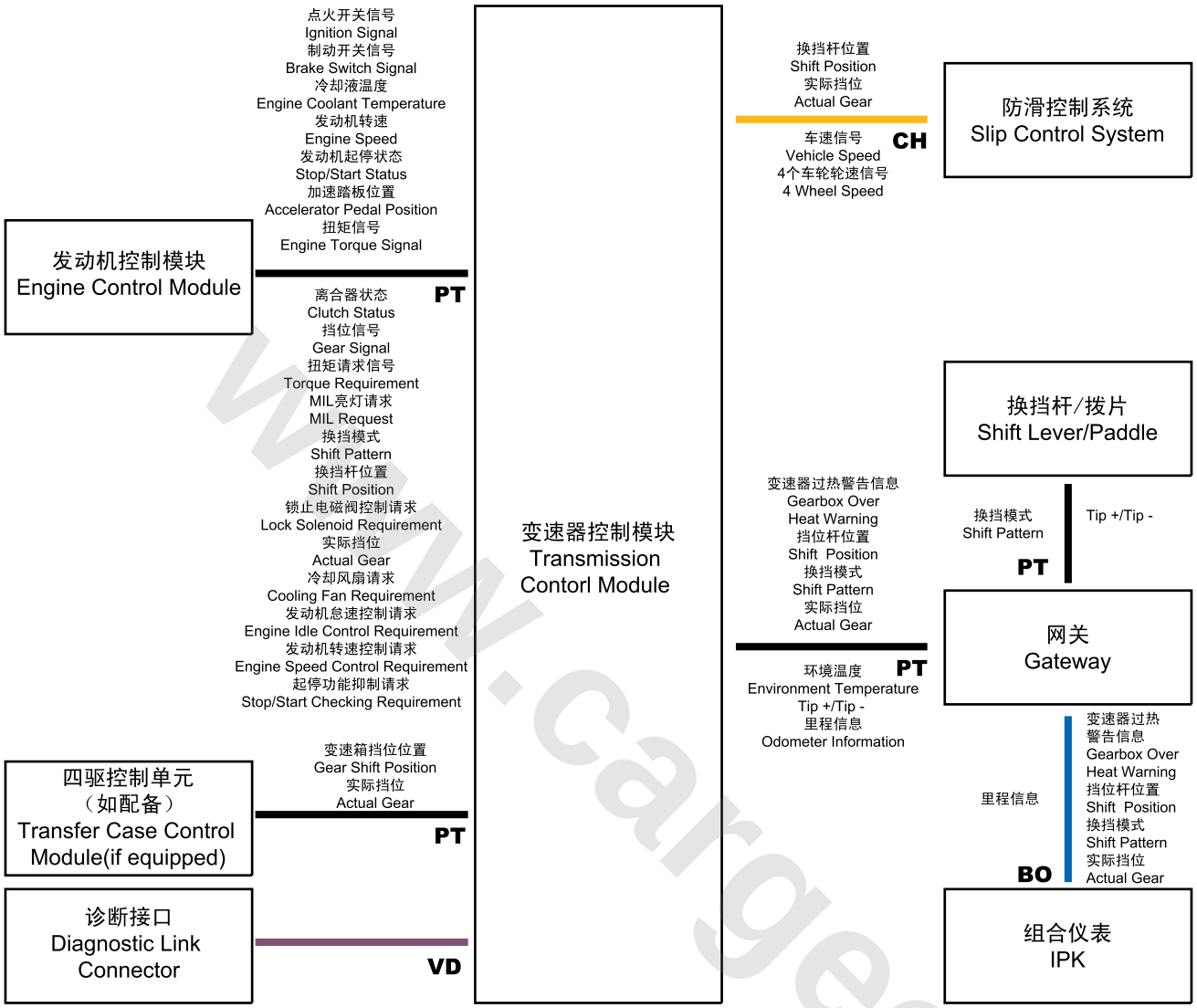

A = Power HS CAN Bus; B = Diagnostic HS CAN Bus; C = Chassis HS CAN Bus; D = Body HS CAN Bus

www.cargeek.ir

www.cargeek.ir

Description

Transmission Overview

This transmission is a type of full-automatic, 7-speed electro-hydraulic control dry transmission with dual clutches, and consists of 3 shafts. The maximum output torque of this transmission is 250Nm, and the maximum input speed of this engine is 7,000rpm.

This transmission provides higher Overall Ratio (OAR) than the dual clutch design of a competitive product, so that the fuel economy is improved. Compared with the mechanical control of the competitive product, the design realizes extremely fast shifting time and quiet shift execution process. With this design, the condition that the vehicle cannot drive because of a certain part failure is avoided, which improves the robustness.

The start-stop function can shut down the engine when the vehicle is parked, which improves the fuel economy also.

The three-axle design realizes 7 forward gears and the reverse gear. Automatic control of gear ratio is realized through the transmission control module (TCM) connected with the transmission. TCM receives and monitors the inputs of different electronic sensors and controls the gear shift in proper time based on these information.

TCM controls the shift solenoid valve, and realizes shifting between two intermediate shafts by executing the shifting fork and synchronizer. Shift from even gear intermediate shaft to odd gear intermediate shaft by varying the torque, and vice versa. The operating process of DCT dual clutch transmission is so much like two manual transmissions in one assembly. TCM also controls the engagement and disengagement of dual clutch assembly to realize the maximum fuel economy transfer of engine through a central slave clutch (CSC) without affecting the vehicle performance. All the solenoids are integrated in a valve body assembly containing control module.

The dry dual clutch assembly is similar to the clutch of manual transmission, and both clutches are normally open. The dry dual clutch disc is not cooled by transmission oil, thus avoiding additional oil loss. These dry friction components improves the quality of automatic gear shifting for transmission during engaging and releasing.

As same as the manual transmission, the dry dual clutch automatic transmission is cooled by air, not liquid, therefore, oil pump, pipelines, connectors, radiator, etc. are not needed to cool the transmission.

There are two ways of separate oil in the transmission. In which, a circuit of low-viscosity fluid flows in the control valve body assembly, and the other circuit of fluid flows in the transmission case to lubricate the gear, which is similar to manual transmission.

Dual clutch automatic transmission uses the dual mass flywheel (DMF) for attenuating torque ripple caused by engine ignition between engine crankshaft and transmission dry clutch assembly. This design reduces the abnormal noise from gears.

Dry dual clutch automatic transmission acts within the following gears:

Park (P): The front wheels are locked to avoid the moving of vehicle forward and backward. The transmission locks the control system by shifting, and it is necessary to fully depress the brake pedal before shifting from P position. For the purpose of safety, when the gear is placed in P position, the parking brake shall also be applied.

Reverse (R): When the gear is placed in this position, the vehicle can drive in the opposite direction.

Neutral (N): When the gear is placed in this position, the engine is allowed to be started or run during vehicle driving. If necessary, this gear can be selected when the vehicle is moving to restart the engine. This gear can also be selected when the vehicle is tracked.

Drive (D): The maximum efficiency and fuel economy can be achieved when the D gear is selected during normal driving. D gear allows the transmission to select any one of the 7 transmission ratios. Adjusting to low-speed gears or higher transmission ratio can be achieved safely by releasing the accelerator pedal or selecting low-speed gears under the manual mode.

Tiptronic: In this position, the driver is allowed to use the manual shifting control system. When the gear shift lever is placed in this position, the driver can realize down-shift or up-shift by moving the gear shift lever forward or backward. The shift paddle on the steering wheel of some models also provides manual shift control.

Dual Mass Flywheel (DMF), Dry Dual Clutch (DDC) and Clutch Slave Cylinder (CSC)

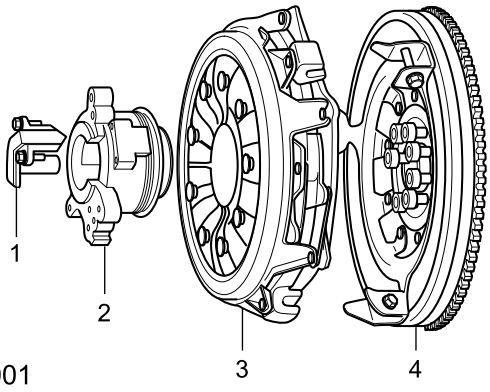

1. Clutch Position Sensor

www.cargeek.ir

www.cargeek.ir

2. Clutch Slave Cylinder
3. Dual Clutch Assembly
4. Dual Mass Flywheel

Dual Dry Clutch (DDC)

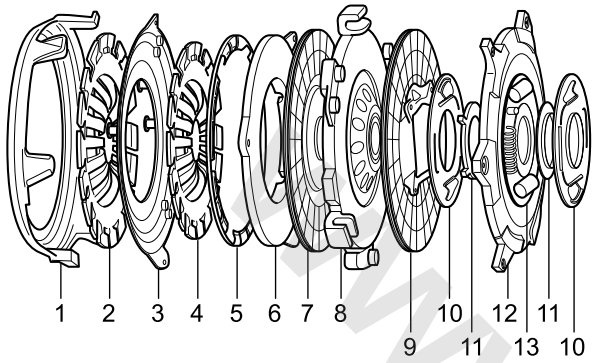

S1212002

1. C1 Pull Cover
2. C1 Diaphragm Spring
3. C1, C2 Pivot Pull Cover
4. C2 Diaphragm Spring
5. Pre-stressed Spring
6. C2 Pressure Plate
7. C2 Driven Disc
8. Middle Pressure Plate
9. C1 Driven Disc
10. Shock Absorber Spring Bracket
11. Support Gasket
12. C1 Pressure Plate
13. Drive Disc

Functions of dual dry clutch are to:

1. Further absorb the torsional vibration from the dual mass flywheel;
2. The on-off of the two clutches are achieved by the action of different pistons in clutch slave cylinder;
3. The two clutches are connected to the odd gear input shaft and even gear input shaft separately by spline, and selects the torque input shaft through the clutch.

Clutch Slave Cylinder

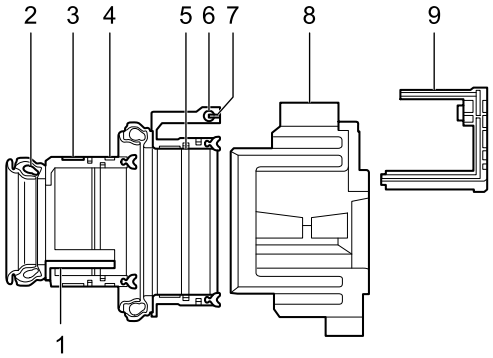

S1212003

1. Anti-rotation Mechanism
2. C2 Bear
3. C2 Supporting Ring
4. C2 Magnetic Pole
5. C1 O-ring
6. Core Box Panel
7. C1 Magnetic Pole
8. Clutch Slave Cylinder Housing
9. Clutch Position Sensor

Functions of clutch slave cylinder are to:

1. Control the two oil cylinders to realize the on and off of the clutch;
2. The hydraulic control system controls the clutch C1 piston to realize engagement of C1 clutch so that the odd input shaft can transfer torque; similarly, the hydraulic control system also controls the clutch C2 piston to realize engagement of C2 clutch so that the even input shaft can transfer torque;
3. The oil cylinder position sensor judges the displacement of clutch diaphragm spring according to the displacement of piston.

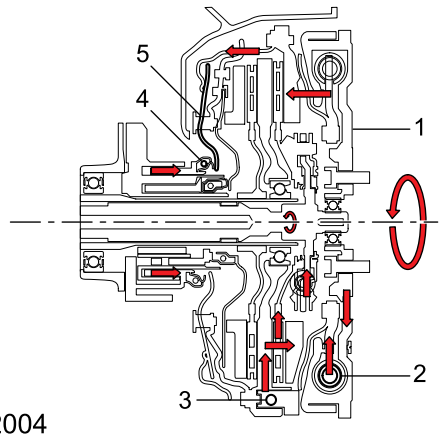

S1212004

1. Engine drives DMF primary cover plate

www.cargeek.ir

www.cargeek.ir

2. DMF primary cover plate drives the secondary cover plate through the spring
3. DMF secondary cover plate is connected firmly with the clutch middle plate
4. With the action of hydraulic pressure, CSC pushes the diaphragm spring
5. The diaphragm spring pushes the pressure plate and driven plate to make the engine connect to the input shaft smoothly

When the C1 piston of clutch slave cylinder acts with the action of hydraulic oil, the diaphragm spring makes the clutch C1 connected, then the power is transfered to the odd input shaft from the clutch C1.

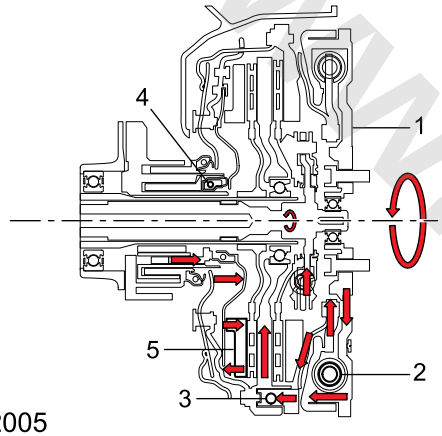

S1212005

1. Engine drives DMF primary cover plate
2. DMF primary cover plate drives the secondary cover plate through the spring
3. DMF secondary cover plate is connected firmly with the clutch middle plate
4. With the action of hydraulic pressure, CSC pushes the diaphragm spring
5. The diaphragm spring pushes the pressure plate and driven plate to make the engine connect to the input shaft smoothly

When the C2 piston of clutch slave cylinder acts with the action of hydraulic oil, the diaphragm spring makes the clutch C2 connected, then the power is transfered to the even input shaft from the clutch C2.

Electro-Hydraulic Control Assembly

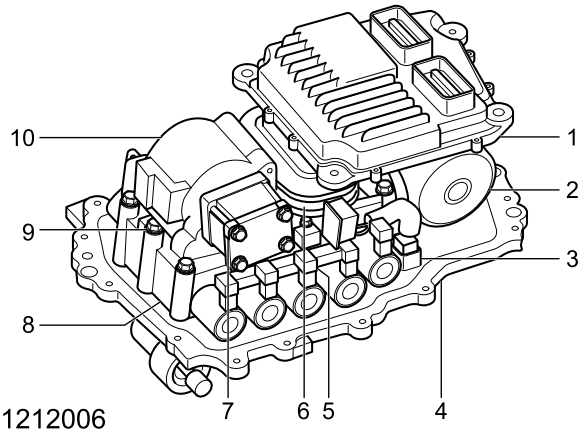

S1212006

1. Transmission Control Module (TCM)
2. Accumulator
3. Penetration Harness (Transmission Body Side)
4. Actuator valve body
5. Solenoid
6. Penetration Harness (Harness Side)
7. Oil Pump
8. Solenoid Body
9. Body
10. Oil Pump Motor
11. Position Sensor (4)
12. Input Shaft Speed Sensor (2)
13. Slave Piston (4)
14. Clutch Slave Cylinder Seals

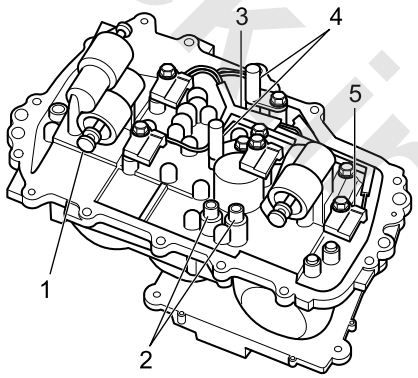

S1212013

1. Slave Piston (4)
2. Clutch Slave Cylinder Seals
3. Valve Body Slave Piston (4)
4. Input Shaft Speed Sensor (2)
5. Position Sensor (4)

Electro-hydraulic control assembly mainly consists of the following parts.

www.cargeek.ir

www.cargeek.ir

VB valve body assembly: By-pass valve;

SB valve body assembly: 9 solenoids;

AB valve body assembly: 4 slave pistons, position sensors, input speed sensor;

Oil pressure establishment: Motor, oil pump, accumulator and pressure filter;

Components of external wall: Harness, TCM, valve body cover and connecting bolt.

Solenoid

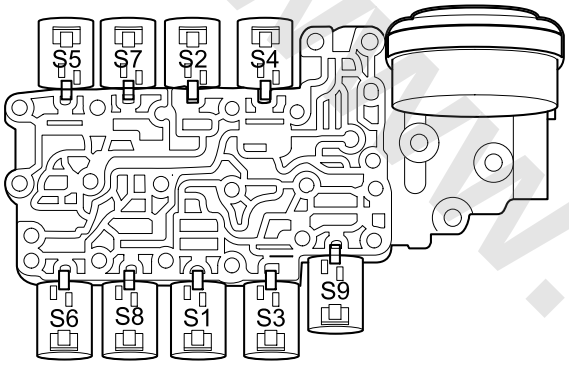

S1212007

Solenoid Name	Solenoid Type	Solenoid Function
S1	Pressure Valve	Control inlet pressure of S3
S2	Pressure Valve	Control inlet pressure of S4
S3	Flow Valve	Control the position of clutch C1
S4	Flow Valve	Control the position of clutch C2
S5	Pressure Valve	Control the shifting fork oil circuit pressure of 17 gear and 35 gear
S6	Pressure Valve	Control the shifting fork oil circuit pressure of 2/6 gear and 4R gear
S7	Flow Valve	Control the shifting fork position of 1/7 gear and 3/5 gear
S8	Flow Valve	Control the shifting fork position of 2/6 gear and 4/R gear
S9	Pressure Valve	Control the logic of shifting fork

Instruction of Shifting

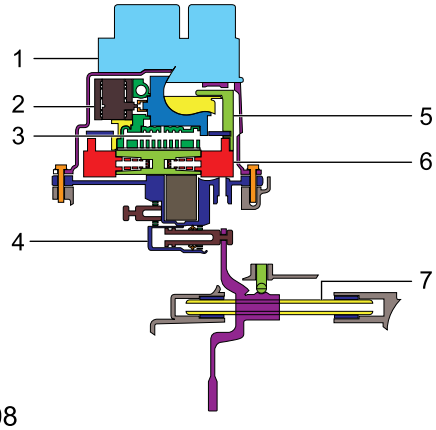

S1212008

1. External controller
2. Oil pump and motor
3. Body
4. Slave Piston
5. Accumulator
6. Solenoid
7. Gear shifting fork assembly

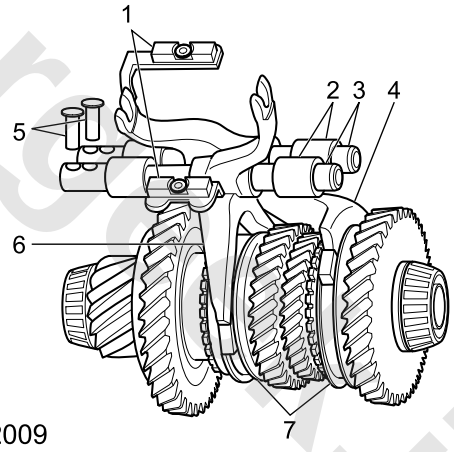

S1212009

1. Magnet bracket
2. Linear bear
3. Track
4. 3/5 gear shifting fork assembly
5. Lock pin
6. 4/R gear shifting fork assembly
7. Synchronizer assembly

Take the transmission in 3 gear for example, at this moment, the solenoid S1 and S3 works, inputting high-pressure oil to the C1 piston of CSC. The piston pushes the clutch C1 to engage. It is the odd shaft that transfers the torque at this moment; otherwise, S5 and S7 moves the shifting fork by controlling the piston, which makes the synchronizer is shifted to 3rd gear, and then the transmission transfers power in the 3rd gear.

www.cargeek.ir

www.cargeek.ir

Parking Mechanism

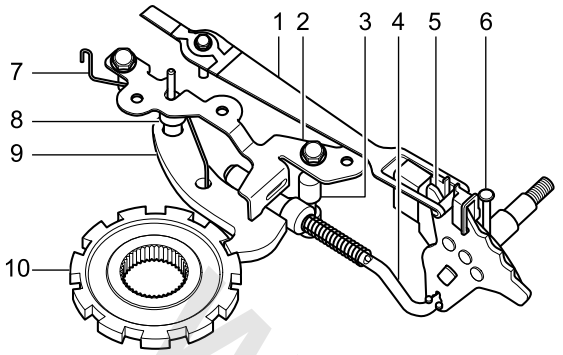

S1212010

1. Shift Retaining Spring Assembly
2. Bracket - parking paw actuator
3. Guider - parking control lever
4. Parking control lever assembly
5. IMS assembly
6. Manual shift shaft stop pin
7. Parking Pawl Spring
8. Parking Pawl Shaft
9. Parking Pawl
10. Parking ratchet wheel

The ratchet wheel mechanism mainly consists of shift retaining spring assembly, parking ratchet wheel, parking pawl, IMS assembly, parking control lever assembly, guider, etc.

The operating principle of parking mechanism: As shown in the figure above, for shifting to P gear, the shift cable pulls the build-in mode switch to make it rotate, and the parking control lever is pulled to the left so as to embed the parking pawl into the groove, then the parking is realized. The principle of shifting from P gear to R gear: The parking control lever moves to the right making the parking pawl get out of the ratchet tooth groove with the action of parking pawl, and the IMS transfers the R gear instruction to **TCM**, then shifting from P gear to R gear is realized with **TCM** controlling the transmission hydraulic system.

Transmission Internal Mode Switch (IMS)

The transmission internal mode switch (IMS) is multi-signal Hall switch array which consists of 5 independent Hall switches. The Hall switch is powered by the voltage of 8.59 ~ 9.3V provided by transmission control module (**TCM**) and transmits the voltage signal back to **TCM** through signal circuit. The Hall switch voltage signal is 0.70 ~ 0.96V (ON) or 1.68 ~ 2.38V (OFF). The voltage signal of each Hall switch is determined by the gear shift lever position. The TCM receives the voltage signal combination of Hall switch and search the relevant form in the TCM memory to judge which gear the driver selects. The relation between the voltage signal combination of Hall switch and the transmission gears is shown in the following figure.

Gear	PRNDL S	PRNDL A	PRNDL B	PRNDL C	PRNDL P
P	ON	OFF	ON	OFF	ON
R	OFF	ON	OFF	OFF	ON
N	ON	ON	OFF	ON	OFF
D	OFF	OFF	ON	ON	OFF
W	ON	OFF	ON	ON	OFF

Differential

Differential fixes the driven gear of main reducing gear to differential housing with bolts, differential housing supports the planetary shaft pin, planetary gear and sun gear. The differential assembly is supported by bearings in the transmission housing. The differential allows the wheels to rotate at different speeds when the output torques are same. The pinion integrated with the output shaft is engaged with the final drive driven gear of the differential assembly. When the output shaft rotates and the wheels moves forward in straight line, the torque will be applied to the whole assembly. The planetary gear does not rotate, and the torque is transfered to the wheel through the drive shaft. When the vehicle turns, the inside wheels drive for less distance with slow speed, this drives the planetary gear to rotate, and the outer sun gear offers a higher speed for outer wheels. Two driven shafts transfer the torque to the differential, and the differential transfers the torque to the wheels through the half axle.

Transmission Control Module (TCM)

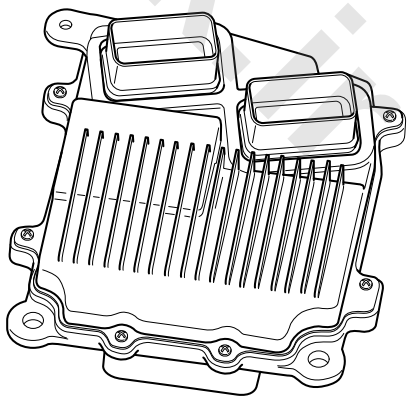

S1212011

TCM is fitted on the transmission case together with the electro-hydraulic control assembly.

TCM uses an Electrically Erasable Read-Only Memory (**EEPROM**), therefore a new or replaced **TCM** may be used for external configuration. **EEPROM** can also update the new information and market-specific data for **TCM**. To input

www.cargeek.ir

www.cargeek.ir

new information, **TCM** must be configured with a scan tool. **EEPROM** can allow **TCM** to be reconfigured for many times as required, so as to meet the constantly changing parameters and regulations.

TCM stores the signal values of the transmission sensors and the actuators. These stored signals guarantee that the transmission can always obtain the optimal performance. If the battery voltage is too low, such as the battery discharges, the information will be lost. When the engine starts for the first time after the battery is discharged or disconnected, **TCM** will restore to the default value. **TCM** 's **EEPROM** allows the stored value to be rapidly accessed again.

Input and Output

The sensor signal enables **TCM** to monitor the transmission state. **TCM** processes the signals and compares them with the data stored in the memory. If these signals are not in the range of parameters stored by **TCM**, **TCM** will adjust the operation of the transmission through the actuator, so as to provide the optimal drive ability and other performances.

TCM also connects with the following units through the **CAN** bus:

- **ECM**
- **BCM**
- **ABS/SCS** regulator **ECU**
- Instrument Pack
- Data link connector

TCM receives input signals of throttle opening from **ECM**, engine coolant temperature, engine speed, engine torque, etc. from ECM; **TCM** also receives input signals of brake switch, pressure sensor, clutch speed, oil temperature, solenoid state, IMS, etc. In addition, **TCM** outputs torque control request, shift gear information and failure warning information to **ECM** and outputs executive signal, etc. to the valve body solenoid.

Transmission Self-adaption

The transmission compensates the normal wear of transmission components by pressure control system during up-shift. When the joint components inside the transmission is worn or changed after a period of time, the gear shifting duration (duration required to engage the clutch) will increase or decrease. To compensate these changes, the TCM adjusts the target pressure of each pressure control solenoid so as to keep the originally calibrated gear shifting duration. The automatic adjustment process is called as "Adaptive Learning" which aims to ensure the consistent gear shifting feeling and improve the durability of the transmission. During the instruction shift, the TCM monitors the engine speed, transmission input shaft speed and output shaft speed to confirm if the gear shifting process is too fast (rigid) or too slow (soft), and adjusts the corresponding pressure control solenoid signal to keep the set gear shifting feeling.

The adaptive function is to automatically compensate the shifting performance of all kinds of vehicle gear shifting system. The adaptive function is a continuous process, and this function will help to keep the optimal gear shifting performance during the whole period of use.

View of Transmission Control Module (TCM) Vehicle Harness Terminal Connector GB009 and Pin Information

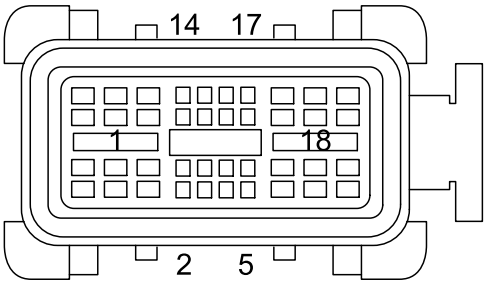

GB009

Pin No.	Description
1	Power Supply of Transmission Relay
2	Run/Ignition State
3	HS CAN Low
4	HS CAN High
5	—
6	—
7	—
8	—
9	—
10	Engine Speed
11	Control of Transmission Relay
12	—
13	—
14	Transmission Wake-up
15	—
16	—
17	—
18	12V Power Supply

www.cargeek.ir

Transmission External Harness

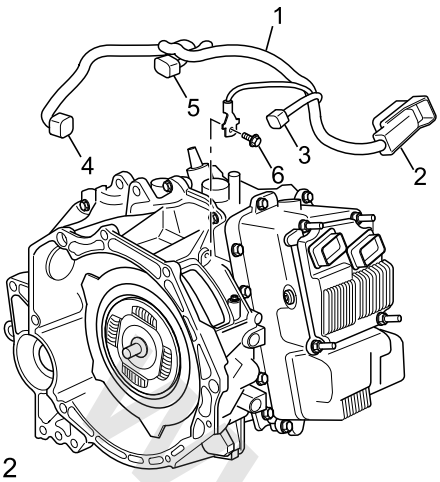

S1212012

1. Transmission External Harness
2. Transmission Control Module Harness Connector
3. P/N Signal Harness Connector
4. Clutch Slave Cylinder Harness Connector
5. Transmission Case Penetration Harness Connector
6. Transmission External Harness Ground Bolt

View of Automatic Transmission Control Module (TCM) Transmission External Harness Terminal Connector and PIN Definition

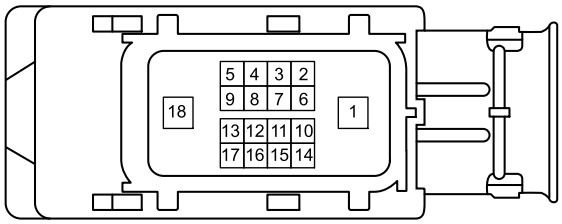

Pin No.	Description
1	Ground
2	9V Power Supply A
3	9V Power Supply B
4	5V Power Supply A
5	Gear Shift Lever Signal A
6	Transmission Output Speed
7	5V Power Supply Ground
8	5V Power Supply B
9	Gear Shift Lever Signal B
10	Odd Clutch Position Sensor
11	5V Power Supply B Ground
12	Gear Shift Lever Signal S
13	Gear Shift Lever Signal C
14	Even Clutch Position Sensor
15	—
16	—
17	Gear Shift Lever Signal P
18	Gear Shift Lever Signal Ground

View of Electro-hydraulic Control Assembly Terminal and PIN Definition

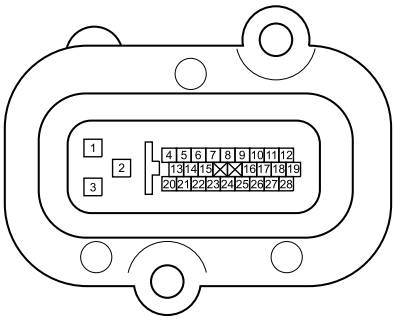

Pin No.	Description
1	Oil Pump Phase A
2	Oil Pump Phase C
3	Oil Pump Phase B
4	High-side Drive 2
5	Current Control Output B
6	Current Control Output A
7	9V Power Supply B
8	26 Shifting Fork Position Sensor
9	Even Input Shaft Speed Sensor
10	Logic Solenoid Control
11	Transmission Main Oil Pressure\Oil Temperature Sensor - Main Oil Pressure Sensor
12	5V Power Supply A
13	Motor Ground
14	4R Shifting Fork Position Sensor
15	17 Shifting Fork Position Sensor
16	Current Control Output C
17	Current Control Output D
18	—
19	5V Power Supply Ground
20	High-side Drive 1
21	35 Shifting Fork Position Sensor
22	Odd Input Shaft Speed Sensor
23	9V Power Supply A

www.cargeek.ir

www.cargeek.ir

24	Current Output Control F
25	Current Output Control E
26	Transmission Main Oil Pressure\Oil Temperature Sensor - Oil Temperature Sensor
27	Current Control Output G
28	Current Control Output H

www.cargeek.ir

www.cargeek.ir

Operation

Transmission gear state

When the dry dual clutch automatic transmission is in different gears, the operating states of the shifting fork, clutch and solenoid are shown in the table below.

Gear	1/7 Gear Shifting Fork	2/6 Gear Shifting Fork	3/5 Gear Shifting Fork	4/R Gear Shifting Fork	Clutch C1	Clutch C2	Solenoid S1	Solenoid S2	Solenoid S3	Solenoid S4	Solenoid S5	Solenoid S6	Solenoid S7	Solenoid S8	Solenoid S9
P	L	M	M	R	O	O									
R	L	M	M	R	O	C	NA	1	NA	1	NA	1	NA	0	1
N	M	M	M	M	O	O									
D1	L	M	M	M	C	O	1	NA	1	NA	1	NA	1	NA	1
D2	M	R	M	M	O	C	NA	1	NA	1	NA	1	NA	1	0
D3	M	M	L	M	C	O	1	NA	1	NA	1	NA	0	NA	0
D4	M	M	M	L	O	C	NA	1	NA	1	NA	1	NA	1	1
D5	M	M	L	M	C	O	1	NA	1	NA	1	NA	1	NA	0
D6	M	L	M	M	O	C	NA	1	NA	1	NA	1	NA	0	0
D7	R	M	M	M	C	O	1	NA	1	NA	1	NA	0	NA	1

NA: Solenoid state is irrelevant to the gear.

0, 1: Solenoid current (A)

L: Left shift fork; M: Middle shift fork; R: Right shift fork.

O: Clutch open; C: Clutch closed.

www.cargeek.ir

www.cargeek.ir

Cold start – Energy accumulator not pressurized

With the shift lever in P position and ignition switch connected, the clutch and gear control actuator oil pump motor assembly are turned on, so that oil flows into the oil pump assembly, and the line pressure is supplied into the energy accumulator circuit directly through the oil filter assembly.

Build oil pressure and ready to shift

• Energy accumulator bypass valve

• Energy accumulator oil is conveyed to the energy accumulator bypass valve, accumulator bypass ball, 1/3/5/7 clutch pressure solenoid S1, 2/4/6/R clutch pressure solenoids S2, S7 and A37 oil circuit pressure solenoids S5, S8 and A6R oil circuit pressure solenoid S6, and 1/3/5/7 and 2/4/6/R logic valve pressure control solenoid S9. During cold start, the energy accumulator oil pressure is not enough to move the energy accumulator bypass valve from the release position.

• 1/3/5/7 clutch pressure solenoid S1

• Energy accumulator oil pressure is conveyed to 1/3/5/7 clutch pressure solenoid S1 for shifting.

• 2/4/6/R clutch pressure solenoid S2

• Energy accumulator oil pressure is conveyed to 2/4/6/R clutch pressure solenoid S2 for shifting.

• S7 and A37 oil circuit pressure solenoid S5

• Energy accumulator oil pressure is conveyed to S7 and A37 oil circuit pressure solenoid S5 for shifting.

• S8 and A6R oil circuit pressure solenoid S6

• Energy accumulator oil pressure is conveyed to S8 and A6R oil circuit pressure solenoid S6 for shifting.

• 1357/246R logic valve pressure control solenoid S9

Energy accumulator oil pressure is conveyed to 1357/246R logic valve pressure control solenoid S9 for shifting.

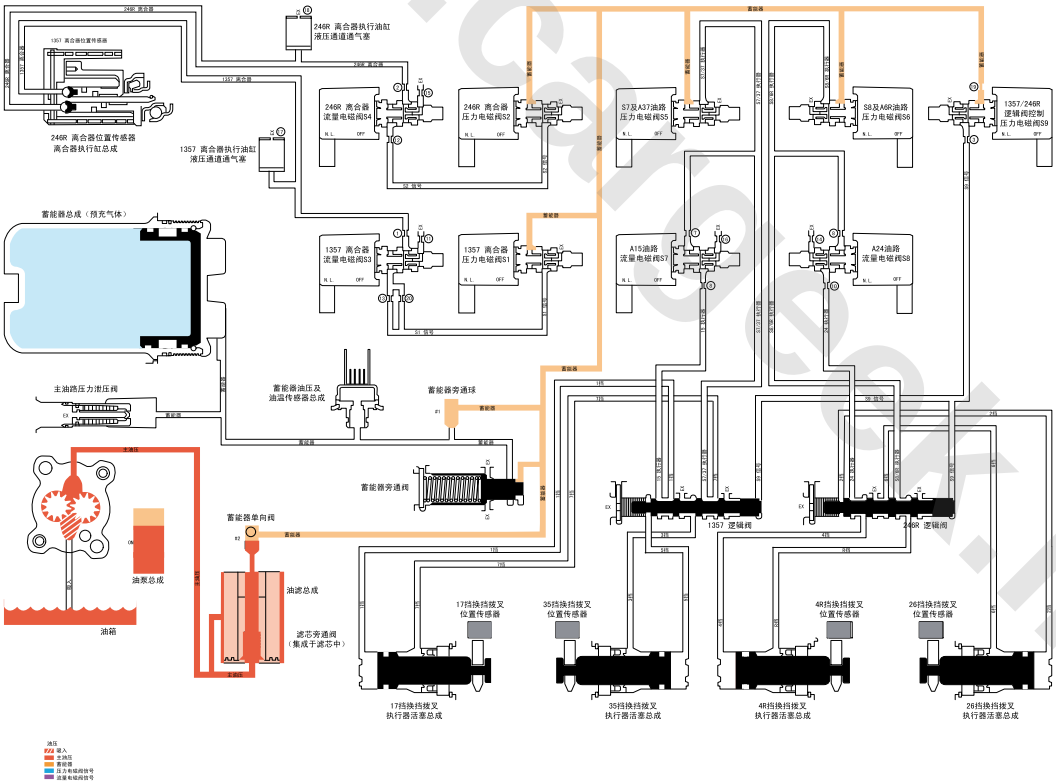

S1212501

www.cargeek.ir

P position – Engine Running

When the shift lever is in the P position and the engine is running, the transmission control module (**TCM**) increases the line pressure through the oil pump motor speed. After a cold start, following changes happen to the hydraulic and electric system of the transmission.

Build oil pressure and ready to shift

• Energy accumulator bypass valve

At this moment, the energy accumulator oil pressure is big enough to overcome the spring resistance of the energy accumulator bypass valve, and the accumulator bypass valve is switched to the open state. Energy accumulator oil is conveyed to the accumulator bypass ball (#1), accumulator oil pressure and oil temperature sensor assembly, main oil circuit pressure relief valve, shift control actuator pressure accumulator assembly, 1/3/5/7 clutch pressure solenoid S1, 2/4/6/R clutch pressure solenoids S2 and S7, A37 oil circuit pressure solenoids S5 and S8, A6R oil circuit pressure solenoid S6, and 1357/246R logic valve pressure control solenoid S9.

• Gear shift control actuator pressure energy accumulator assembly

Energy accumulator oil pressure overcomes the air pressure, moves the accumulator piston, inhibits uneven pressure occurring in the accumulator oil circuit to control the oil pressure supplied to the solenoid when each solenoid is opened or closed.

• Main oil circuit pressure relief valve

Energy accumulator oil pressure overcomes the spring resistance by moving the ball valve, and exhaust redundant oil circuit pressure.

• Energy accumulator bypass ball (#1)

Energy accumulator oil pressure moves off the ball valve, and conveys enough oil circuit pressure to the control solenoid .

• 1/3/5/7 clutch pressure solenoid S1

Enough energy accumulator oil pressure is conveyed to 1/3/5/7 clutch pressure solenoid S1 for shifting.

• 2/4/6/R clutch pressure solenoid S2

Enough energy accumulator oil pressure is conveyed to 2/4/6/R clutch pressure solenoid S2 for shifting.

• S7 and A37 oil circuit pressure solenoid S5

Enough energy accumulator oil pressure is conveyed to S7 and A37 oil circuit pressure solenoid S5 for shifting.

• S8 and A6R oil circuit pressure solenoid S6

Enough energy accumulator oil pressure is conveyed to S8 and A6R oil circuit pressure solenoid S6 for shifting.

• 1357/246R logic valve pressure control solenoid S9

Energy accumulator oil pressure is conveyed to 1357/246R logic valve pressure control solenoid S9 for shifting.

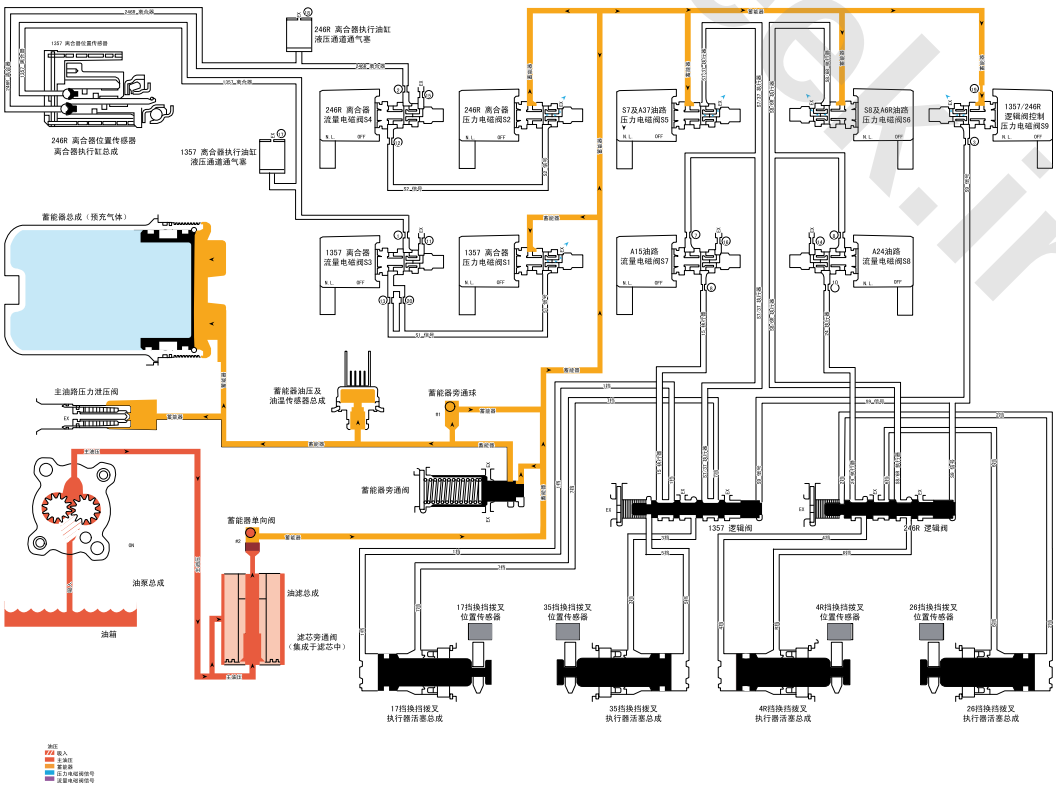

S1212502

www.cargeek.ir

R Gear

Power flow in R position

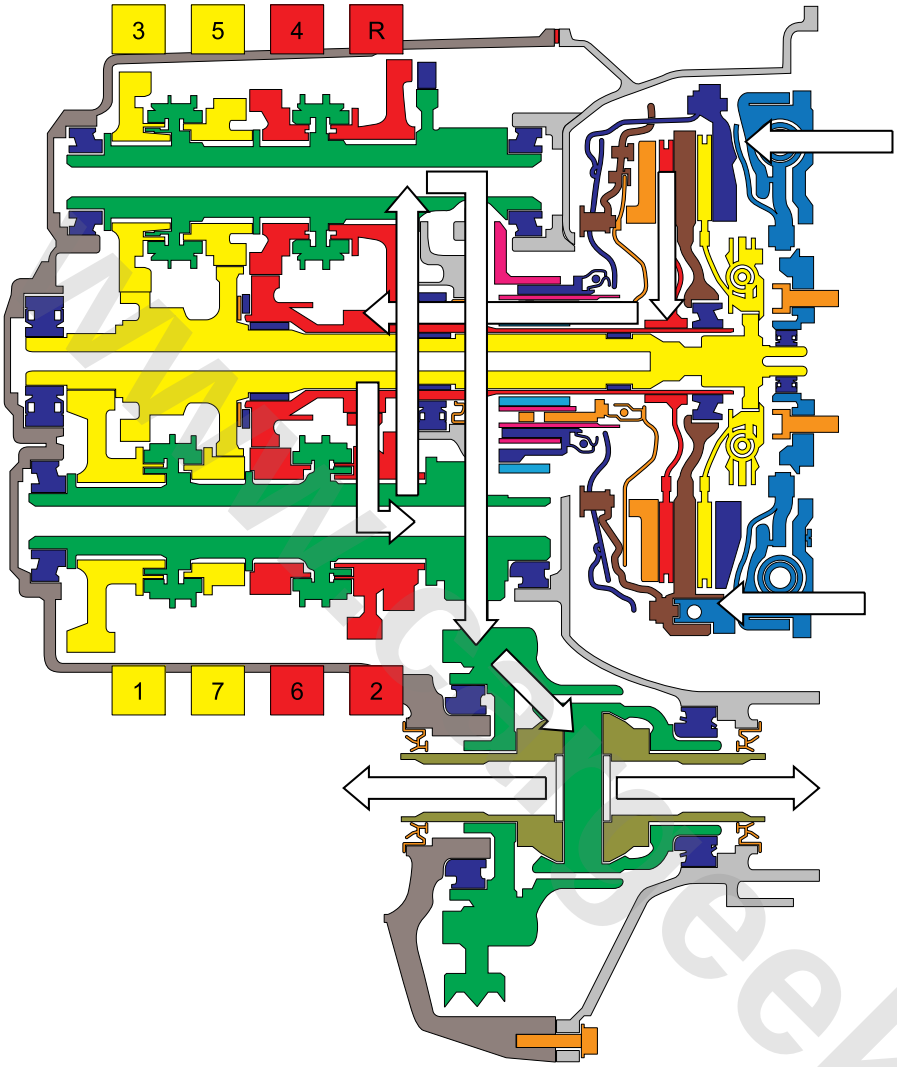

S1212503

When the shift lever is moved from the P position to R position, a command connects the 1/3/5/7 clutch pressure solenoid S1, 2/4/6/R clutch pressure solenoid S2, 2/4/6/R clutch flow solenoid S4, S8 and A6R oil circuit pressure solenoid S6, and A24 oil circuit flow solenoid S8, and at the same time, the hydraulic and electrical system of the transmission will have the following changes.

Engage 2/4/6/R gear clutch

• 2/4/6/R clutch pressure solenoid S2

Open 2/4/6/R clutch pressure solenoid S2, so that energy accumulator oil enters the S2 signal circuit. Then, S2 signal flow is conveyed to 2/4/6/R clutch flow solenoid S4 through #12 orifice.

• 2/4/6/R clutch flow solenoid S4

Open 2/4/6/R clutch flow solenoid S4, so that S2 signal enters into 2/4/6/R clutch circuit. Then, 2/4/6/R clutch oil is conveyed to the clutch actuator cylinder assembly through #2 orifice.

• Clutch actuator cylinder assembly

2/4/6/R clutch oil enters the clutch actuator cylinder assembly, then overcomes the spring force, moves the 2/4/6/R gear clutch piston, and engages the 2/4/6/R gear clutch plate.

Engage 4R gear shifting fork assembly

• S8 and A6R oil circuit pressure solenoid S6

Open S8 and A6R oil circuit pressure solenoid S6, so that energy accumulator oil enters the S8/6R actuator circuit. Then, S8/6R actuator oil is conveyed to A24 oil circuit flow solenoid S8 and 2/4/6/R gear logic valve through #9 orifice.

• A24 oil circuit flow solenoid S8

www.cargeek.ir

Open A24 oil circuit flow solenoid S8, so that S8/6R actuator oil enters 24 actuator circuit. Then, 24 actuator oil is conveyed to 2/4/6/R gear logic valve through #10 orifice.

• 2/4/6/R gear logic valve

24 actuator oil enters into the 4th gear circuit through 2/4/6/R gear logic valve. S8/6R actuator oil enters into the reverse circuit through 2/4/6/R gear logic valve. Both the 4th gear oil pressure and reverse gear oil pressure are conveyed to the 4R gear shifting fork actuator piston assembly.

• 4R gear shifting fork actuator piston assembly

With the reverse gear oil pressure greater than the 4th gear oil pressure, move the 4th gear shifting fork actuator piston assembly to the reverse gear position, so as to drive the 4R gear shifting fork assembly, and the transmission is switched to reverse gear.

Build oil pressure and ready to shift

• 1/3/5/7 clutch pressure solenoid S1

Open 1/3/5/7 clutch pressure solenoid S1, so that energy accumulator oil enters the S1 signal circuit. Then, S1 signal flow is conveyed to 1/3/5/7 clutch flow solenoid S3 through #13 and #20 orifices for shifting to the 1st gear.

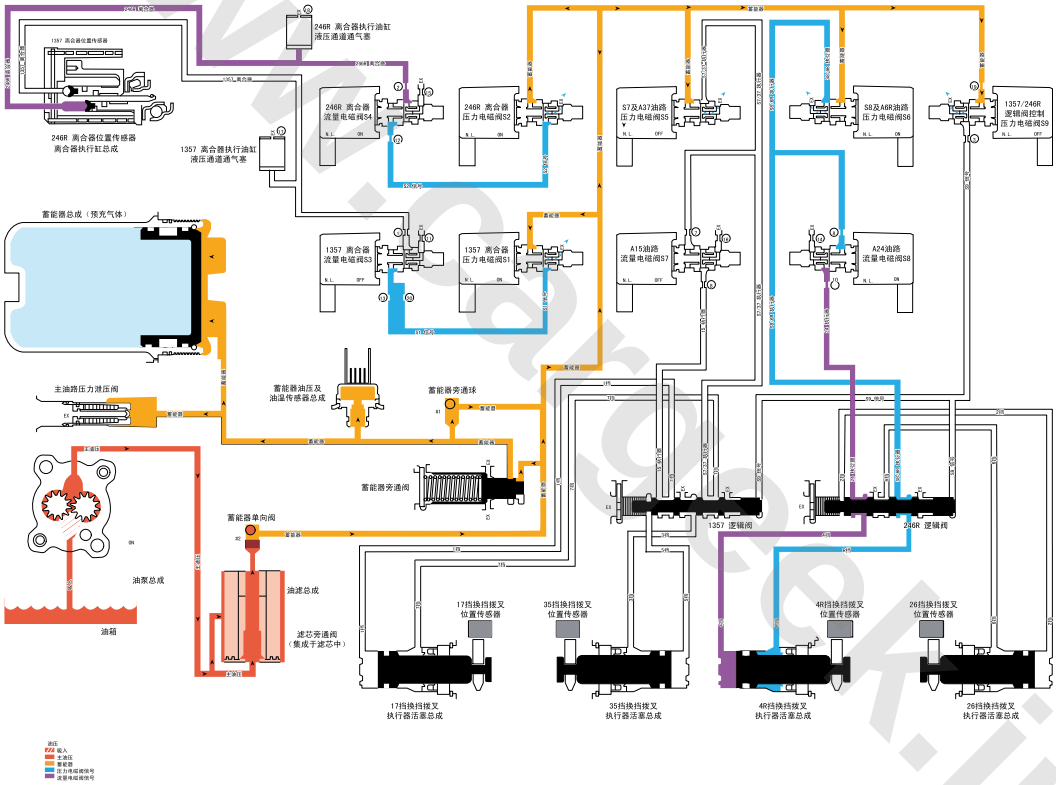

S1212504

www.cargeek.ir

N position — Engine running

When the shift lever is shifted to N position, the hydraulic and electrical system operations are the same when it is in P position. But if N position is selected after the vehicle runs to the R position, a command closes the 1/3/5/7 clutch pressure solenoid S1, 2/4/6/R clutch pressure solenoid S2, 246R clutch flow solenoids S4, S8 and A6R oil circuit pressure solenoid S6, and A24 oil circuit flow solenoid S8, and at the same time, the hydraulic and electrical system will have the following changes.

Release of 2/4/6/R gear clutch

• 2/4/6/R clutch pressure solenoid S2

Command to close the 2/4/6/R clutch pressure solenoid S2, so that S2 signal oil pressure is discharged from 2/4/6/R clutch flow solenoid S4.

• 2/4/6/R clutch flow solenoid S4

Command to close the 2/4/6/R clutch flow solenoid S4, so that 2/4/6/R clutch oil pressure is discharged from the clutch actuator cylinder assembly.

• Clutch actuator cylinder assembly

2/4/6/R clutch oil pressure is discharged from the clutch actuator cylinder assembly, so that the spring moves the 2/4/6/R gear clutch piston, and the 2/4/6/R gear clutch plate is released.

Release of 4R gear shifting fork assembly

• S8 and A6R oil circuit pressure solenoid S6

Command to close S8 and A6R oil circuit pressure solenoid S6, so that S8/6R actuator oil pressure is discharged from A24 oil circuit flow solenoid S8 and 2/4/6/R gear logic valve.

• A24 oil circuit flow solenoid S8

Command to close A24 oil circuit flow solenoid S8, so that 24 actuator oil pressure is discharged from 2/4/6/R gear logic valve.

• 2/4/6/R gear logic valve

4th gear oil pressure is discharged to 24 actuator circuit through 2/4/6/R gear logic valve. Reverse gear oil pressure is discharged to 24 actuator circuit through 2/4/6/R gear logic valve.

• 4R gear shifting fork actuator piston assembly

Reverse gear oil pressure and 4th gear oil pressure are discharged from 4R gear shifting fork actuator piston assembly, and at the same time, the 4R gear shifting fork actuator piston assembly is moved to Neutral (N) position.

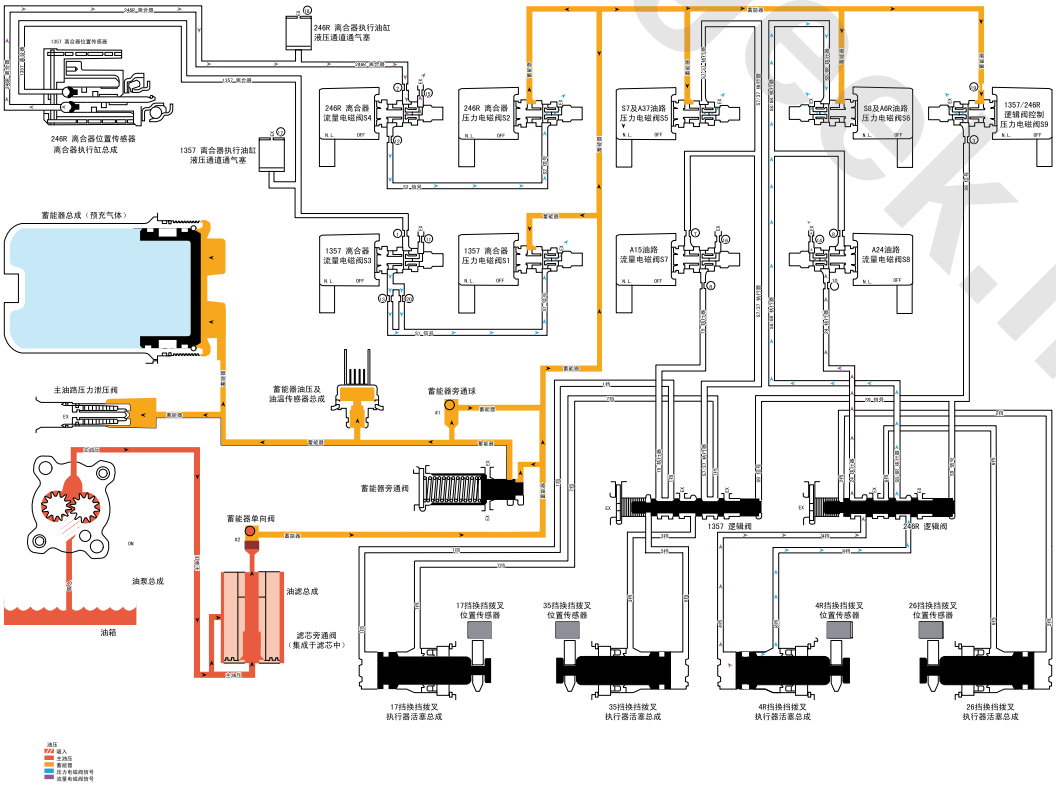

S1212505

www.cargeek.ir

D1 position

Power flow in D1 position

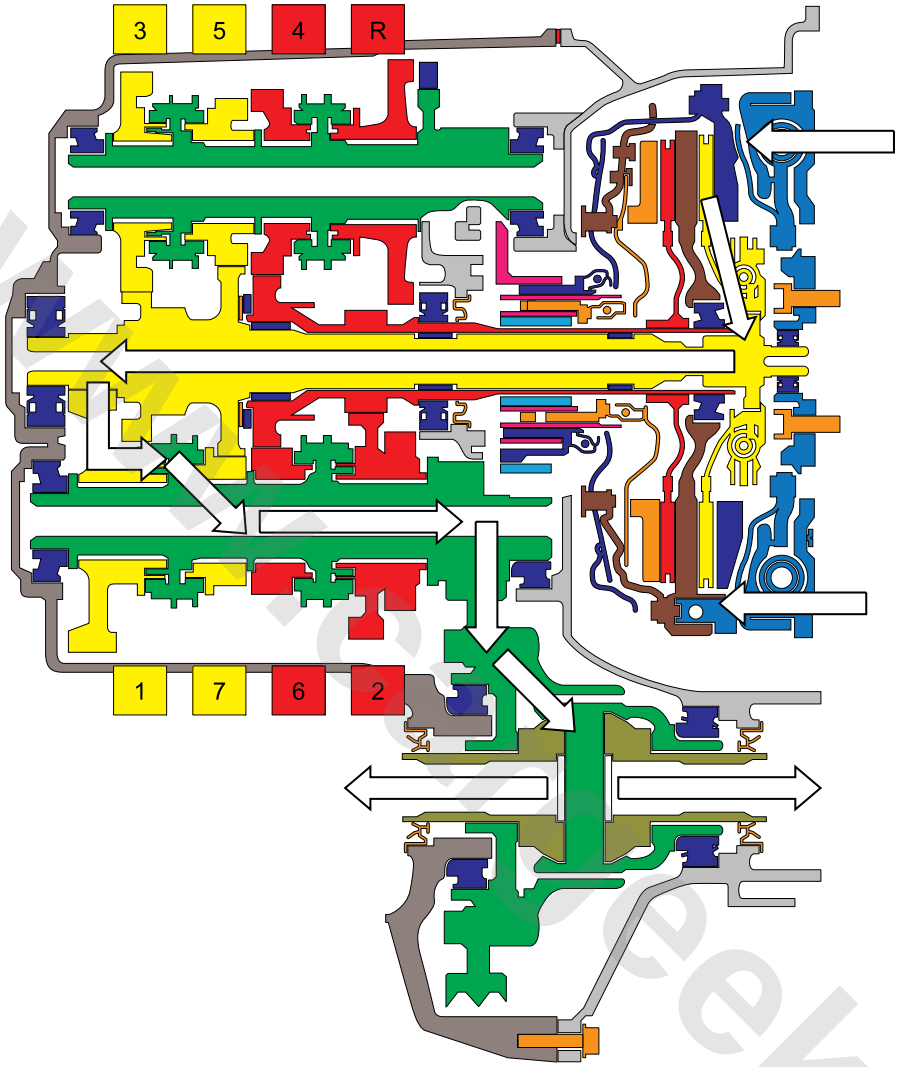

S1212506

When the shift lever is moved from the N position to D position, a command connects the 1/3/5/7 clutch pressure solenoid S1, 1/3/5/7 clutch pressure solenoid S3, S7, A37 oil circuit pressure solenoid S5, and A15 oil circuit flow solenoid S7. At the same time, the transmission hydraulic and electrical system will have the following changes, so as to start the vehicle from the parking position.

Engage 1/3/5/7 gear clutch

• 1/3/5/7 clutch pressure solenoid S1

Open 1/3/5/7 clutch pressure solenoid S1, so that energy accumulator oil enters the S1 signal circuit. Then, S1 signal flow is conveyed to 1/3/5/7 clutch flow solenoid S3 through #13 and #20 orifices

• 1/3/5/7 clutch flow solenoid S3

Open 1/3/5/7 clutch flow solenoid S3, so that S1 signal enters into 1/3/5/7 clutch circuit. Then, 1/3/5/7 clutch oil is conveyed to the clutch actuator cylinder assembly through #1 orifice.

• Clutch actuator cylinder assembly

1/3/5/7 clutch oil enters the clutch actuator cylinder assembly, then overcomes the spring force, moves the 1/3/5/7 gear clutch piston, and engages the 1/3/5/7 gear clutch plate.

Engage 1/7 gear shifting fork assembly

• S7 and A37 oil circuit pressure solenoid S5

Open S7 and A37 oil circuit pressure solenoid S5, so that energy accumulator oil enters the S7/37 actuator circuit. Then, S7/37 actuator oil is conveyed to A15 oil circuit flow solenoid S7 and 1/3/5/7 gear logic valve through #7 orifice.

• A15 oil circuit flow solenoid S7

www.cargeek.ir

Open A15 oil circuit flow solenoid S7, so that S7/37 actuator oil enters 15 actuator circuit. Then, 15 actuator oil is conveyed to 1/3/5/7 gear logic valve through #8 orifice.

• 1/3/5/7 gear logic valve

15 actuator oil enters into the 1st gear circuit through 1/3/5/7 gear logic valve. S7/37 actuator oil enters into the 7th gear circuit through 1/3/5/7 gear logic valve. Both the 1st gear oil pressure and 7th gear oil pressure are conveyed to the 1/7 gear shifting fork actuator piston assembly.

• 1/7 gear shifting fork actuator piston assembly

With the 1st gear oil pressure greater than the 7th gear oil pressure, move the1/7 gear shifting fork actuator piston assembly to the 1st gear position, so as to drive the 1/7 gear shifting fork assembly, and the transmission is switched to 1st gear.

Build oil pressure and ready to shift

• 2/4/6/R clutch pressure solenoid S2

Open 2/4/6/R clutch pressure solenoid S2, so that energy accumulator oil enters the S2 signal circuit. Then, S2 signal flow is conveyed to 2/4/6/R clutch flow solenoid S4 through #12 orifice for shifting to the 2nd gear.

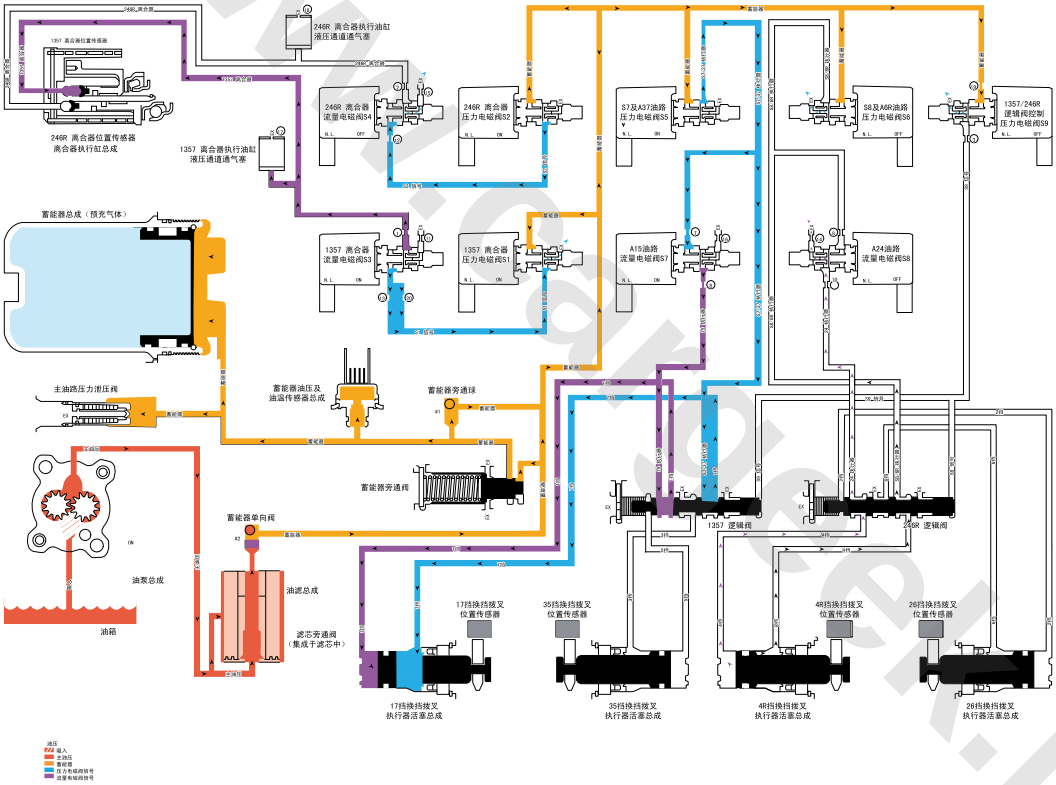

S1212507

www.cargeek.ir

D2 gear

Power flow in D2 gear

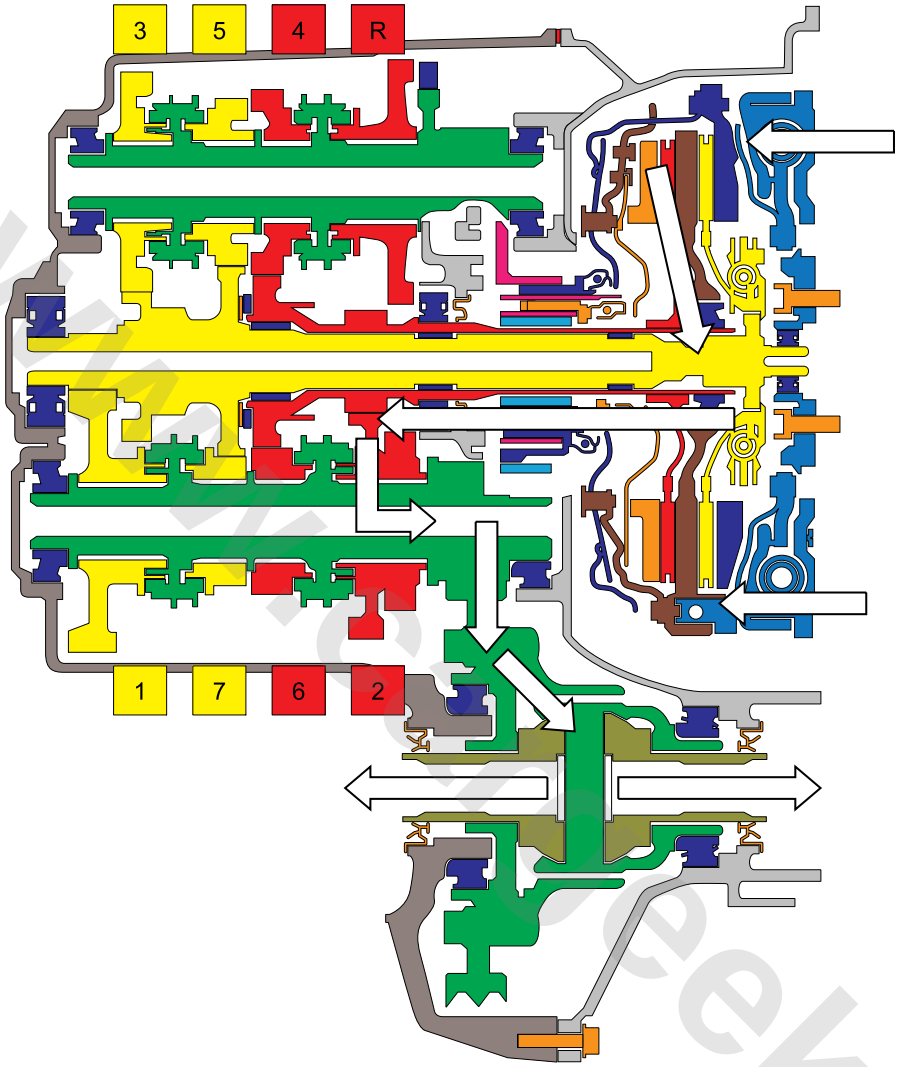

S1212508

With the improvement of vehicle speed and running to the appropriate conditions, the transmission control module (**TCM**) processes the input signals from the transmission input and output shaft speed sensor, throttle position sensor and other vehicle sensors to determine when the command connects 2/4/6/R clutch flow solenoid S4, S8 and A6R oil circuit pressure solenoid S6 and A24 oil circuit flow solenoid S8 and 1357/246R logic valve pressure control solenoid S9, and command 2/4/6/R gear clutch to engage. At the same time, command to close 1/3/5/7 clutch flow solenoid S3, S7, A37 oil circuit pressure solenoid S5, and A15 oil circuit flow solenoid S7. At the same time, the transmission is shifted to 2nd gear.

Engage 2/4/6/R gear clutch

• 2/4/6/R clutch flow solenoid S4

Open 2/4/6/R clutch flow solenoid S4, so that S2 signal enters into 246R clutch circuit. Then, 2/4/6/R clutch oil is conveyed to the clutch actuator cylinder assembly through #2 orifice.

• Clutch actuator cylinder assembly

2/4/6/R clutch oil enters the clutch actuator cylinder assembly, then overcomes the spring force, moves the 2/4/6/R gear clutch piston, and engages the 2/4/6/R gear clutch plate.

Engage 2/6 gear shifting fork assembly

• 1357/246R logic valve pressure control solenoid S9

Open 1357/246R logic valve pressure control solenoid S9, so that energy accumulator oil enters the S9 signal circuit. Then, S9 signal flow is conveyed to 1/3/5/7 gear logic valve and 2/4/6/R gear logic valve through #3 orifice.

• S8 and A6R oil circuit pressure solenoid S6

www.cargeek.ir

www.cargeek.ir

Open S8 and A6R oil circuit pressure solenoid S6, so that energy accumulator oil enters the S8/6R actuator circuit. Then, S8/6R actuator oil is conveyed to A24 oil circuit flow solenoid S8 and 2/4/6/R gear logic valve through #9 orifice.

• A24 oil circuit flow solenoid S8

Open A24 oil circuit flow solenoid S8, so that S8/6R actuator oil enters 24 actuator circuit. Then, 24 actuator oil is conveyed to 2/4/6/R gear logic valve through #10 orifice.

• 2/4/6/R gear logic valve

The S9 signal flow is conveyed to the 2/4/6/R gear logic solenoid, and overcomes the spring force to move the logic valve so that the 24 actuator oil enters the 2nd circuit through the logic valve. S8/6R actuator oil enters the 6th circuit through 2/4/6/R gear logic valve. Both the 2nd gear oil pressure and 6th gear oil pressure are conveyed to the 2/6 gear shifting fork actuator piston assembly.

• 2/6 gear shifting fork actuator piston assembly

With the 2nd gear oil pressure greater than the 6th gear oil pressure, move the 2/6 gear shifting fork actuator piston assembly to the 2nd gear position, so as to drive the 2/6 gear shifting fork assembly, and the transmission is switched to 2nd gear.

Release of 1/3/5/7 gear clutch

• 1/3/5/7 clutch flow solenoid S3

Command to close the 1/3/5/7 clutch flow solenoid S3, so that 1/3/5/7 clutch oil pressure is discharged from the clutch actuator cylinder assembly.

• Clutch actuator cylinder assembly

1/3/5/7 clutch oil pressure is discharged from the clutch actuator cylinder assembly, so that the spring moves the 1/3/5/7 gear clutch piston, and the 1/3/5/7 gear clutch plate is released.

Release of 1/7 gear shifting fork assembly

• S7 and A37 oil circuit pressure solenoid S5

Command to close S7 and A37 oil circuit pressure solenoid S5, so that S7/37 actuator oil pressure is discharged from A15 oil circuit flow solenoid S7 and 1/3/5/7 gear logic valve.

• A15 oil circuit flow solenoid S7

Command to close A15 oil circuit flow solenoid S7, so that 15 actuator oil pressure is discharged from 1/3/5/7 gear logic valve.

• 1/3/5/7 gear logic valve

S9 signal flow is conveyed to the 1/3/5/7 gear logic valve, and moves the logic valve according to spring force, which makes the oil pressure of 1st and 7th gear is discharged from the 1/3/5/7 gear.

• 1/7 gear shifting fork actuator piston assembly

1st gear oil pressure and 7th gear oil pressure are discharged from 1/7 gear shifting fork actuator piston assembly, and at the same time, the 1/7 gear shifting fork actuator piston assembly is moved to Neutral (N) position.

Build oil pressure and ready to shift

• 1/3/5/7 clutch pressure solenoid S1

Keep 1/3/5/7 clutch pressure solenoid S1 open, so that energy accumulator oil enters the S1 signal circuit. Then, S1 signal flow is conveyed to 1/3/5/7 clutch flow solenoid S3 through #13 and #20 orifices for shifting to the 3rd gear.

www.cargeek.ir

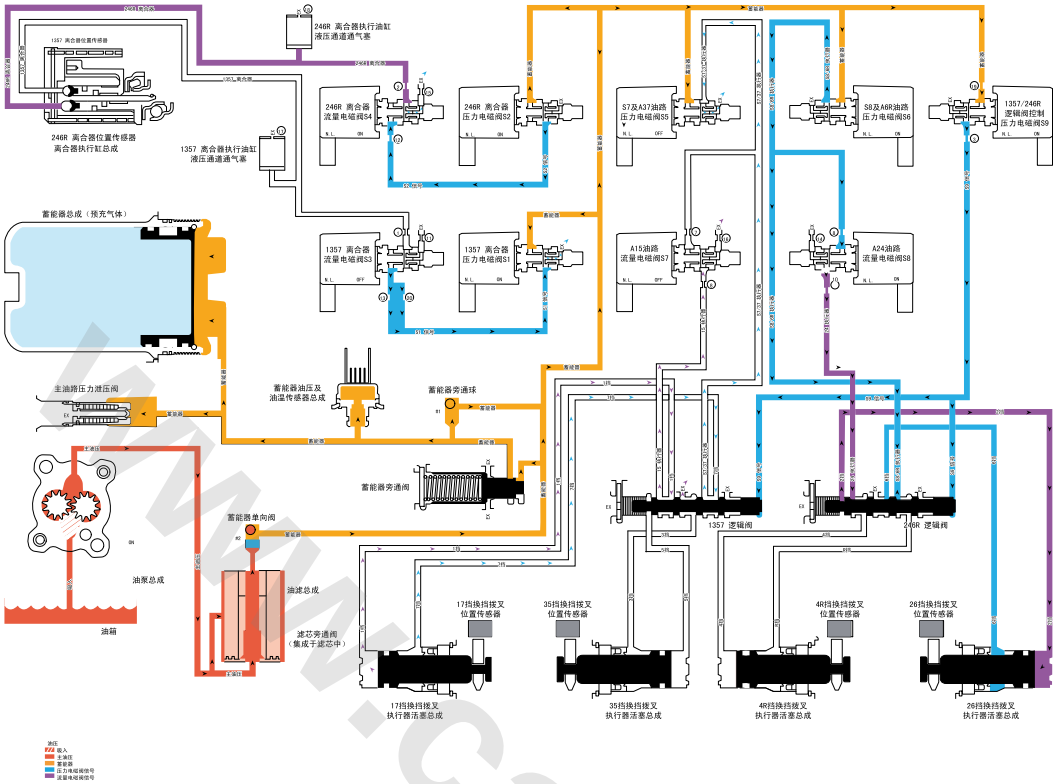

S1212509

www.cargeek.ir

D3 gear

Power flow in D3 gear

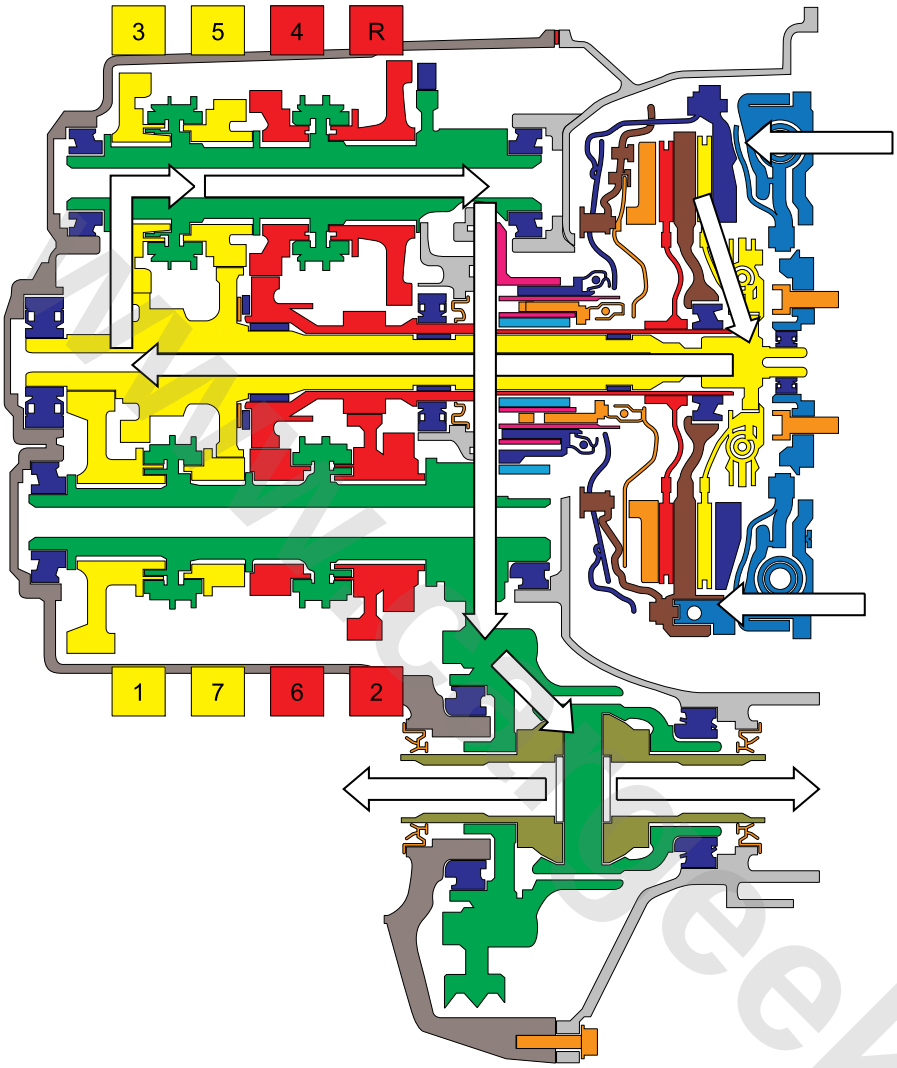

S1212510

With the improvement of vehicle speed and running to the appropriate conditions, the transmission control module (**TCM**) processes the input signals from the transmission input and output shaft speed sensor, throttle position sensor and other vehicle sensors to determine when the command connects 1/3/5/7 clutch flow solenoid S3, S7 and A37 oil circuit pressure solenoid S5 and A15 oil circuit flow solenoid S7, and command 1/3/5/7 gear clutch engagement. At the same time, command to close 2/4/6/R clutch flow solenoid S4, S8, A6R oil circuit pressure solenoid S6, and A24 oil circuit flow solenoid S8. At the same time, the transmission is shifted to 3rd gear.

Engage 1/3/5/7 gear clutch

• 1/3/5/7 clutch flow solenoid S3

Open 1/3/5/7 clutch flow solenoid S3, so that S1 signal enters into 1/3/5/7 clutch circuit. Then, 1/3/5/7 clutch oil is conveyed to the clutch actuator cylinder assembly through #1 orifice.

• Clutch actuator cylinder assembly

1/3/5/7 clutch oil enters the clutch actuator cylinder assembly, then overcomes the spring force, moves the 1/3/5/7 gear clutch piston, and engages the 1/3/5/7 gear clutch plate.

Engage 35 gear shifting fork assembly

• S7 and A37 oil circuit pressure solenoid S5

Open S7 and A37 oil circuit pressure solenoid S5, so that energy accumulator oil enters the S7/37 actuator circuit. Then, S7/37 actuator oil is conveyed to A15 oil circuit flow solenoid S7 and 1/3/5/7 gear logic valve through #7 orifice.

• A15 oil circuit flow solenoid S7

Open A15 oil circuit flow solenoid S7, so that S7/37 actuator oil enters 15 actuator circuit. Then, 15 actuator oil is conveyed to 1/3/5/7 gear logic valve through #8 orifice.

• 1357 gear logic valve

www.cargeek.ir

S7/37 actuator oil enters into the 7th gear circuit through 1/3/5/3 gear logic valve. 15 actuator oil enters into the 1st gear circuit through 5/3/5/7 gear logic valve. Both the 3rd gear oil pressure and 5th gear oil pressure are conveyed to the 3/5 gear shifting fork actuator piston assembly.

• 3/5 gear shifting fork actuator piston assembly

With the 3rd gear oil pressure greater than the 5th gear oil pressure, move the 3/5 gear shifting fork actuator piston assembly to the 3rd gear position, so as to drive the 3/5 gear shifting fork assembly, and the transmission is switched to 3rd gear.

Release of 2/4/6/R gear clutch

• 2/4/6/R clutch flow solenoid S4

Command to close the 2/4/6/R clutch flow solenoid S4, so that 2/4/6/R clutch oil pressure is discharged from the clutch actuator cylinder assembly.

• Clutch actuator cylinder assembly

2/4/6/R clutch oil pressure is discharged from the clutch actuator cylinder assembly, so that the spring moves the 2/4/6/R gear clutch piston, and the 2/4/6/R gear clutch plate is released.

Release of 2/6 gear shifting fork assembly

• S8 and A6R oil circuit pressure solenoid S6

Command to close S8 and A6R oil circuit pressure solenoid S6, so that S8/6R actuator oil pressure is discharged from A24 oil circuit flow solenoid S8 and 2/4/6/R gear logic valve.

• A24 oil circuit flow solenoid S8

Command to close A24 oil circuit flow solenoid S8, so that 24 actuator oil pressure is discharged from 2/4/6/R gear logic valve.

• 2/4/6/R gear logic valve

2nd gear oil pressure is discharged to 24 actuator circuit through 2/4/6/R gear logic valve. 2nd gear oil pressure is discharged to 24 actuator circuit through 6/4/6/R gear logic valve.

• 2/6 gear shifting fork actuator piston assembly

2nd gear oil pressure and 6th gear oil pressure are discharged from 2/6 gear shifting fork actuator piston assembly, and at the same time, the 2/6 gear shifting fork actuator piston assembly is moved to Neutral (N) position.

Build oil pressure and ready to shift

• 2/4/6/R clutch pressure solenoid S2

Keep 2/4/6/R clutch pressure solenoid S2 open, so that energy accumulator oil enters the S2 signal circuit. Then, S2 signal flow is conveyed to 2/4/6/R clutch flow solenoid S4 through #12 orifice for shifting to the 4th gear.

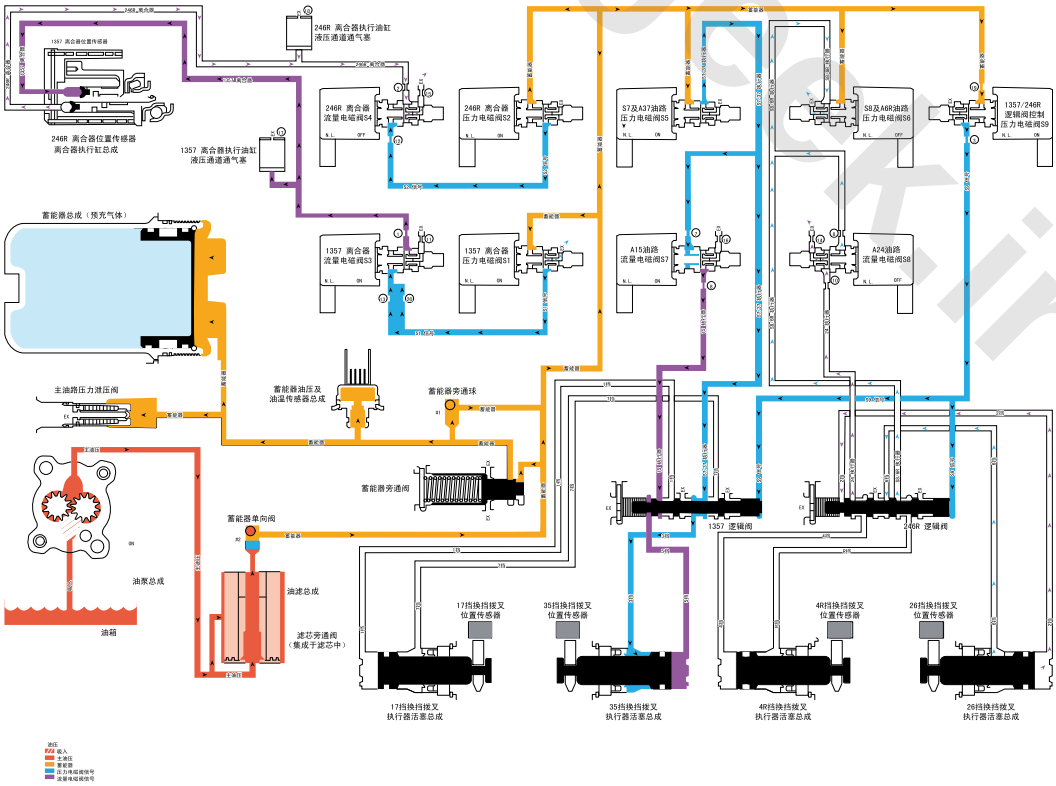

S1212511

www.cargeek.ir

D4 gear

Power flow in D4 gear

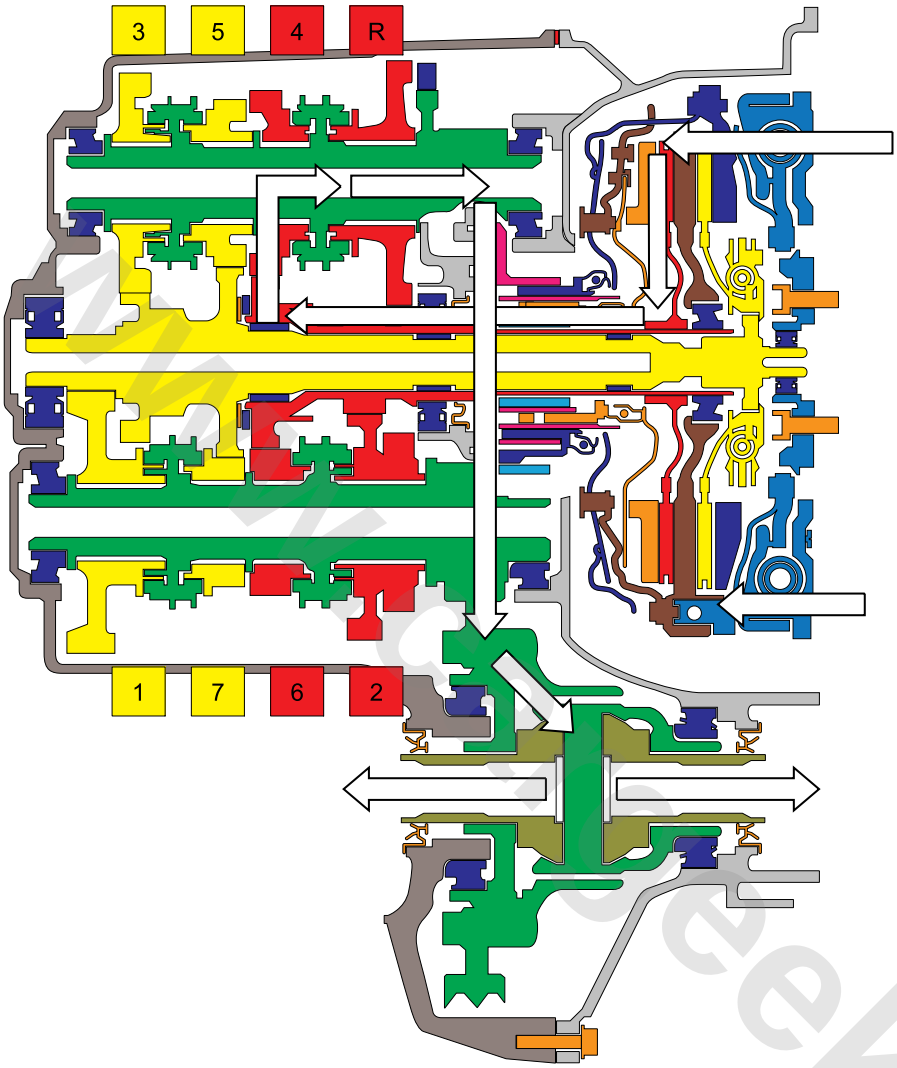

S1212512

With the improvement of vehicle speed and running to the appropriate conditions, the transmission control module (**TCM**) processes the input signals from the transmission input and output shaft speed sensor, throttle position sensor and other vehicle sensors to determine when the command connects 2/4/6/R clutch flow solenoid S4, S8 and A6R oil circuit pressure solenoid S6 and A24 oil circuit flow solenoid S8, and command 2/4/6/R gear clutch engagement. At the same time, command to close 1/3/5/7 clutch flow solenoid S3, S7, A37 oil circuit pressure solenoid S5, A15 oil circuit flow solenoid S7, and 1357/246R logic valve pressure control solenoid S9. At the same time, the transmission is shifted to 4th gear.

Engage 2/4/6/R gear clutch

• 2/4/6/R clutch flow solenoid S4

Open 2/4/6/R clutch flow solenoid S4, so that S2 signal enters into 246R clutch circuit. Then, 2/4/6/R clutch oil is conveyed to the clutch actuator cylinder assembly through #2 orifice.

• Clutch actuator cylinder assembly

2/4/6/R clutch oil enters the clutch actuator cylinder assembly, then overcomes the spring force, moves the 2/4/6/R gear clutch piston, and engages the 2/4/6/R gear clutch plate.

Engage 4R gear shifting fork assembly

• 1357/246R logic valve pressure control solenoid S9

Command to close 1357/246R logic pressure control solenoid S9, so that S9 signal oil pressure is discharged from 1/3/5/7 gear logic valve and 2/4/6/R logic valve.

• S8 and A6R oil circuit pressure solenoid S6

Open S8 and A6R oil circuit pressure solenoid S6, so that energy accumulator oil enters the S8/6R actuator circuit.

www.cargeek.ir

www.cargeek.ir

Then, S8/6R actuator oil is conveyed to A24 oil circuit flow solenoid S8 and 2/4/6/R gear logic valve through #9 orifice.

• A24 oil circuit flow solenoid S8

Open A24 oil circuit flow solenoid S8, so that S8/6R actuator oil enters 24 actuator circuit. Then, 24 actuator oil is conveyed to 2/4/6/R gear logic valve through #10 orifice.

• 2/4/6/R gear logic valve

When S9 signal oil pressure is discharged, the spring moves the 2/4/6/R gear logic valve to the released position. 24 actuator oil enters into the 4th gear circuit through 2/4/6/R gear logic valve. S8/6R actuator oil enters into the reverse circuit through 2/4/6/R gear logic valve. Both the 4th gear oil pressure and reverse gear oil pressure are conveyed to the 4R gear shifting fork actuator piston assembly.

• 4R gear shifting fork actuator piston assembly

With the 4th gear oil pressure greater than the reverse gear oil pressure, move the 4th gear shifting fork actuator piston assembly to the 4th gear position, so as to drive the 4R gear shifting fork assembly, and the transmission is switched to 4th gear.

Release of 1/3/5/7 gear clutch

• 1/3/5/7 clutch flow solenoid S3

Command to close the 1/3/5/7 clutch flow solenoid S3, so that 1/3/5/7 clutch oil pressure is discharged from the clutch actuator cylinder assembly.

• Clutch actuator cylinder assembly

1/3/5/7 clutch oil pressure is discharged from the clutch actuator cylinder assembly, so that the spring moves the 1/3/5/7 gear clutch piston, and the 1/3/5/7 gear clutch plate is released.

Release of 35 gear shifting fork assembly

• S7 and A37 oil circuit pressure solenoid S5

Command to close S7 and A37 oil circuit pressure solenoid S5, so that S7/37 actuator oil pressure is discharged from A15 oil circuit flow solenoid S7 and 1/3/5/7 gear logic valve.

• A15 oil circuit flow solenoid S7

Command to close A15 oil circuit flow solenoid S7, so that 15 actuator oil pressure is discharged from 1/3/5/7 gear logic valve.

• 1/3/5/7 gear logic valve

When S9 signal oil pressure is discharged, the spring moves the 1/3/5/7 gear logic valve to the released position, so that the 3rd gear oil pressure and 5th gear oil pressure are discharged from the 1/3/5/7 gear logic valve.

• 3/5 gear shifting fork actuator piston assembly

3rd gear oil pressure and 5th gear oil pressure are discharged from 3/5 gear shifting fork actuator piston assembly, and at the same time, the 3/5 gear shifting fork actuator piston assembly is moved to Neutral (N) position.

Build oil pressure and ready to shift

• 1/3/5/7 clutch pressure solenoid S1

Keep 1/3/5/7 clutch pressure solenoid S1 open, so that energy accumulator oil enters the S1 signal circuit. Then, S1 signal flow is conveyed to 1/5/5/7 clutch flow solenoid S3 through #13 and #20 orifices for shifting to the 3rd gear.

www.cargeek.ir

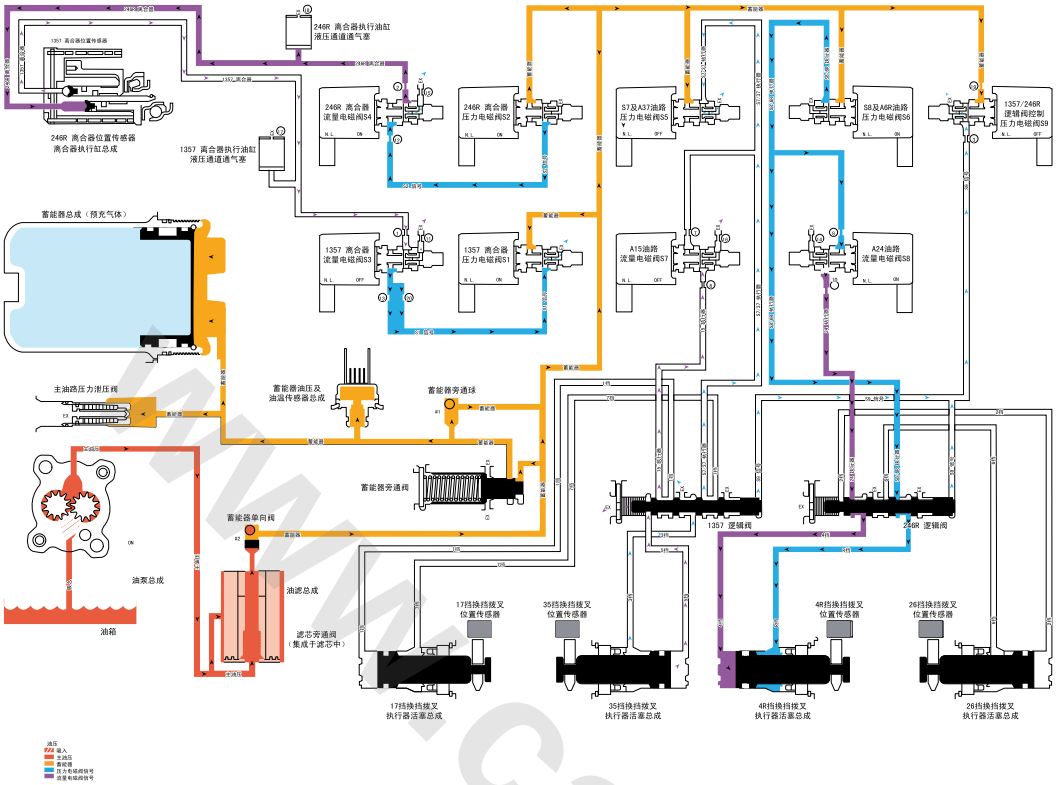

S1212513

www.cargeek.ir

www.cargeek.ir

D5 gear

Power flow in D5 gear

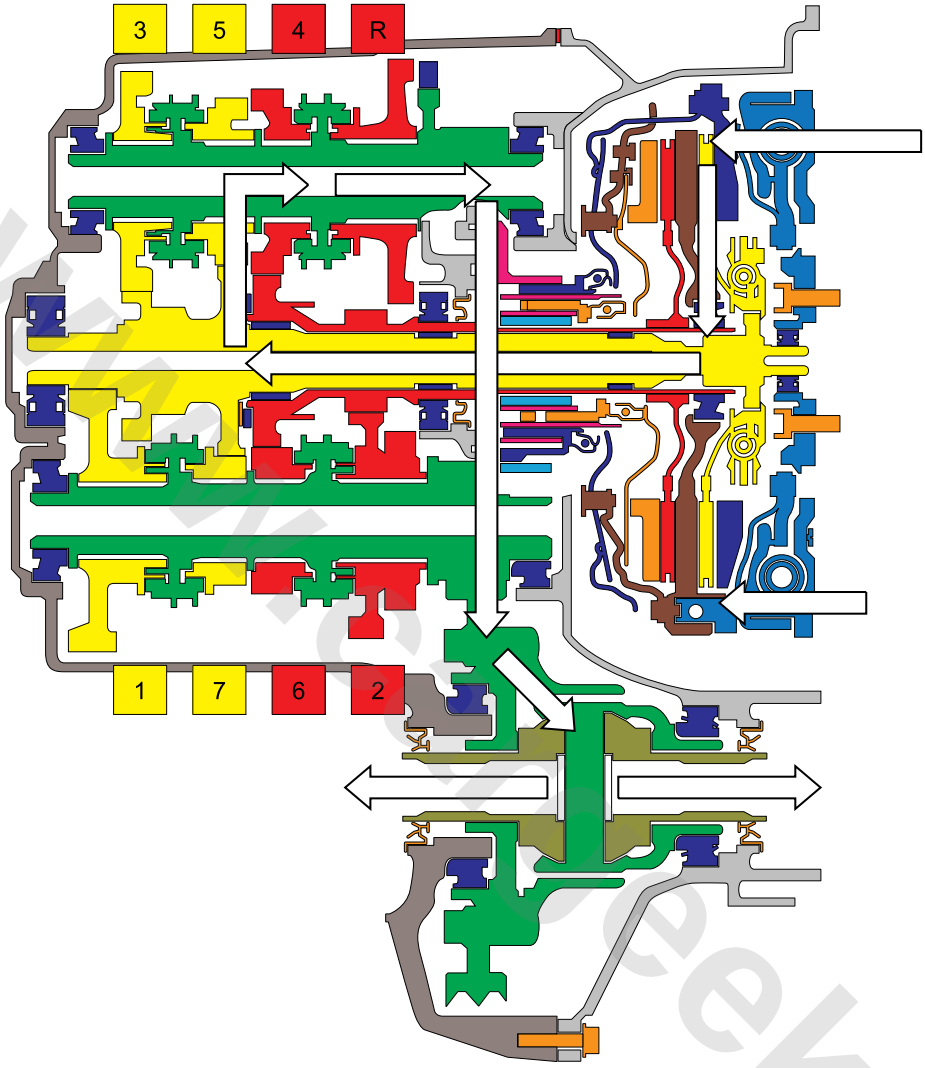

S1212514

With the improvement of vehicle speed and running to the appropriate conditions, the transmission control module (**TCM**) processes the input signals from the transmission input and output shaft speed sensor, throttle position sensor and other vehicle sensors to determine when the command connects 1/3/5/7 clutch flow solenoid S3, S7 and A37 oil circuit pressure solenoid S5 and A15 oil circuit flow solenoid S7 and 1357/246R logic valve pressure control solenoid S9, and command 1357 gear clutch to engage. At the same time, command to close 2/4/6/R clutch flow solenoid S4, S8, A6R oil circuit pressure solenoid S6, and A24 oil circuit flow solenoid S8. At the same time, the transmission is shifted to 5th gear.

Engage 1/3/5/7 gear clutch

• 1/3/5/7 clutch flow solenoid S3

Open 1/3/5/7 clutch flow solenoid S3, so that S1 signal enters into 1/3/5/7 clutch circuit. Then, 1/3/5/7 clutch oil is conveyed to the clutch actuator cylinder assembly through #1 orifice.

• Clutch actuator cylinder assembly

1/3/5/7 clutch oil enters the clutch actuator cylinder assembly, then overcomes the spring force, moves the 1/3/5/7 gear clutch piston, and engages the 1/3/5/7 gear clutch plate.

Engage 3/5 gear shifting fork assembly

• 1357/246R logic valve pressure control solenoid S9

Open 1357/246R logic valve pressure control solenoid S9, so that energy accumulator oil enters the S9 signal circuit. Then, S9 signal flow is conveyed to 1/3/5/7 gear logic valve and 2/4/6/R gear logic valve through #3 orifice.

• S7 and A37 oil circuit pressure solenoid S5

Open S7 and A37 oil circuit pressure solenoid S5, so that energy accumulator oil enters the S7/37 actuator circuit. Then, S7/37 actuator oil is conveyed to A15 oil circuit flow solenoid S7 and 1/3/5/7 gear logic valve through #7 orifice.

www.cargeek.ir

www.cargeek.ir

• A15 oil circuit flow solenoid S7

Open A15 oil circuit flow solenoid S7, so that S7/37 actuator oil enters 15 actuator circuit. Then, 15 actuator oil is conveyed to 1/3/5/7 gear logic valve through #8 orifice.

• 1/3/5/7 gear logic valve

The S9 signal flow is conveyed to the 1/3/5/7 gear logic solenoid, and overcomes the spring force to move the logic valve so that the S7/37 actuator oil enters the 3rd circuit through the logic valve. 15 actuator oil enters into the 1st gear circuit through 5/3/5/7 gear logic valve. Both the 3rd gear oil pressure and 5th gear oil pressure are conveyed to the 3/5 gear shifting fork actuator piston assembly.

• 3/5 gear shifting fork actuator piston assembly

With the 5th gear oil pressure greater than the 3rd gear oil pressure, move the 3/5 gear shifting fork actuator piston assembly to the 5th gear position, so as to drive the 3/5 gear shifting fork assembly, and the transmission is switched to 5th gear.

Release of 2/4/6/R gear clutch

• 2/4/6/R clutch flow solenoid S4

Command to close the 2/4/6/R clutch flow solenoid S4, so that 2/4/6/R clutch oil pressure is discharged from the clutch actuator cylinder assembly.

• Clutch actuator cylinder assembly

2/4/6/R clutch oil pressure is discharged from the clutch actuator cylinder assembly, which makes the spring move the 2/4/6/R gear clutch piston, and the 2/4/6/R gear clutch plate is released.

Release of 4R gear shifting fork assembly

• S8 and A6R oil circuit pressure solenoid S6

Command to close S8 and A6R oil circuit pressure solenoid S6, so that S8/6R actuator oil pressure is discharged from A24 oil circuit flow solenoid S8 and 2/4/6/R gear logic valve.

• A24 oil circuit flow solenoid S8

Command to close A24 oil circuit flow solenoid S8, so that 24 actuator oil pressure is discharged from 2/4/6/R gear logic valve.

• 2/4/6/R gear logic valve

S9 signal flow is conveyed to the 2/4/6/R gear logic valve, overcomes the spring force and moves the logic valve, which makes the oil pressure of 2nd and 6th gear is discharged from the 2/4/6/R gear.

• 4R gear shifting fork actuator piston assembly

Reverse gear oil pressure and 4th gear oil pressure are discharged from 4R gear shifting fork actuator piston assembly, and at the same time, the 4R gear shifting fork actuator piston assembly is moved to Neutral (N) position.

Build oil pressure and ready to shift

• 2/4/6/R clutch pressure solenoid S2

Keep 2/4/6/R clutch pressure solenoid S2 open, so that energy accumulator oil enters the S2 signal circuit. Then, S2 signal flow is conveyed to 2/6/6/R clutch flow solenoid S4 through #12 orifice for shifting to the 4th gear.

www.cargeek.ir

www.cargeek.ir

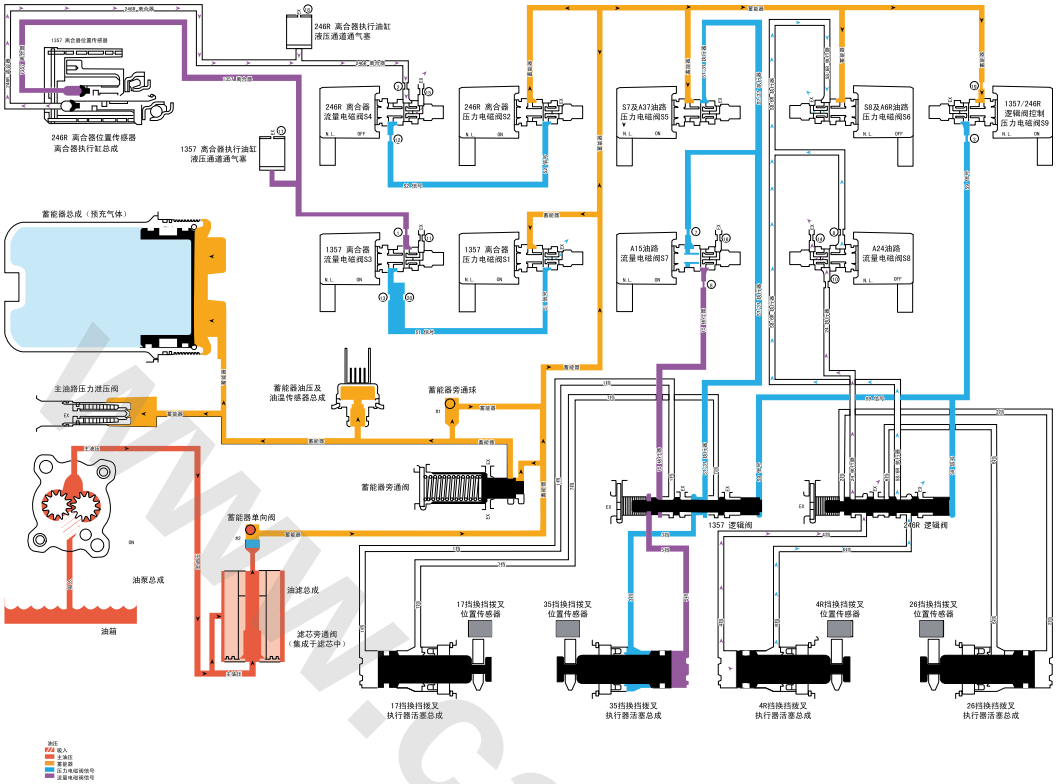

S1212515

www.cargeek.ir

www.cargeek.ir

D6 gear

Power flow in D6 position

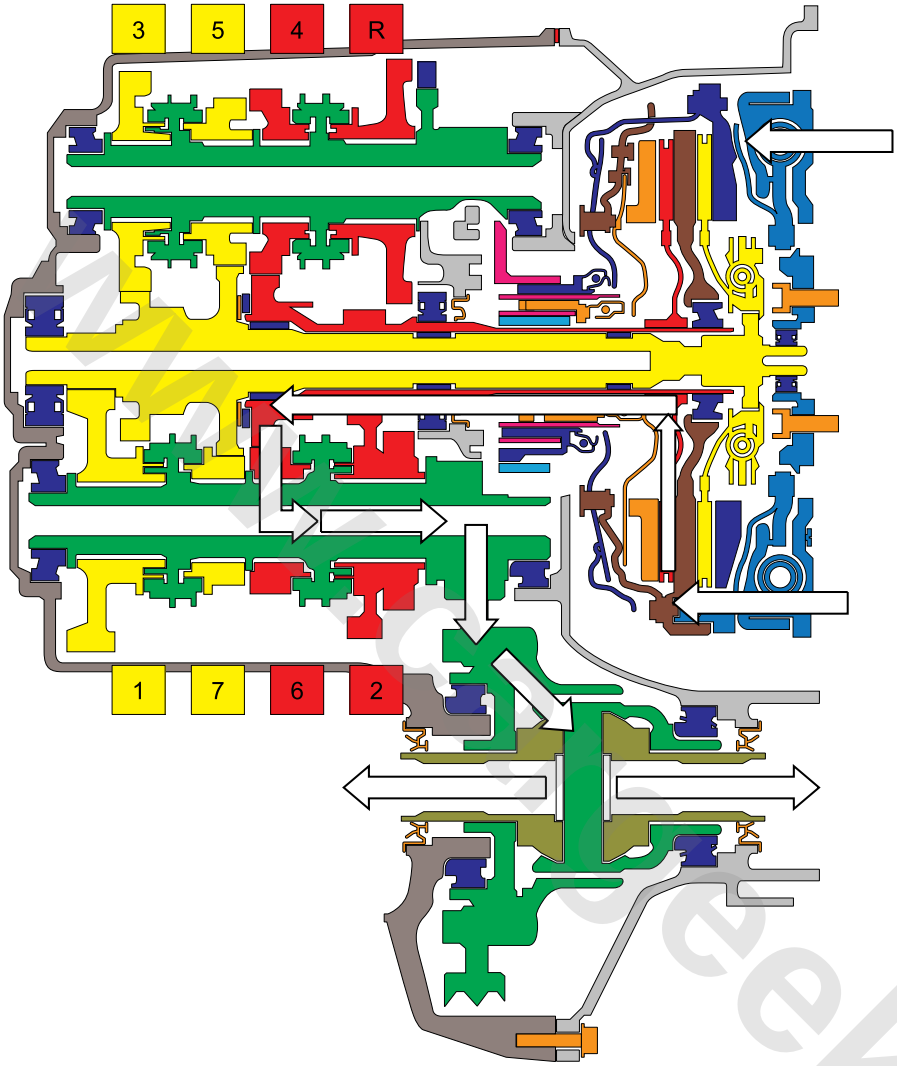

S1212516

With the improvement of vehicle speed and running to the appropriate conditions, the transmission control module (**TCM**) processes the input signals from the transmission input and output shaft speed sensor, throttle position sensor and other vehicle sensors to determine when the command connects 2/4/6/R clutch flow solenoid S4, S8 and A6R oil circuit pressure solenoid S6 and A24 oil circuit flow solenoid S8, and control 2/4/6/R gear clutch engagement. At the same time, command to close 1/3/5/7 clutch flow solenoid S3, S7, A37 oil circuit pressure solenoid S5, and A15 oil circuit flow solenoid S7. At the same time, the transmission is shifted to 6th gear.

Engage 2/4/6/R gear clutch

• 2/4/6/R clutch flow solenoid S4

Open 2/4/6/R clutch flow solenoid S4, so that S2 signal enters into 246R clutch circuit. Then, 2/4/6/R clutch oil is conveyed to the clutch actuator cylinder assembly through #2 orifice.

• Clutch actuator cylinder assembly

2/4/6/R clutch oil enters the clutch actuator cylinder assembly, then overcomes the spring force, moves the 2/4/6/R gear clutch piston, and engages the 2/4/6/R gear clutch plate.

Engage 2/6 gear shifting fork assembly

• S8 and A6R oil circuit pressure solenoid S6

Open S8 and A6R oil circuit pressure solenoid S6, so that energy accumulator oil enters the S8/6R actuator circuit. Then, S8/6R actuator oil is conveyed to A24 oil circuit flow solenoid S8 and 2/4/6/R gear logic valve through #9 orifice.

• A24 oil circuit flow solenoid S8

Open A24 oil circuit flow solenoid S8, so that S8/6R actuator oil enters 24 actuator circuit. Then, 24 actuator oil is conveyed to 2/4/6/R gear logic valve through #10 orifice.

• 2/4/6/R gear logic valve

www.cargeek.ir

www.cargeek.ir

24 actuator oil enters into the 4th gear circuit through 2/2/6/R gear logic valve. S8/6R actuator oil enters the 6th circuit through 2/4/6/R gear logic valve. Both the 2nd gear oil pressure and 6th gear oil pressure are conveyed to the 2/6 gear shifting fork actuator piston assembly.

• 2/6 gear shifting fork actuator piston assembly

With the 6th gear oil pressure greater than the 2nd gear oil pressure, move the 2/6 gear shifting fork actuator piston assembly to the 6th gear position, so as to drive the 2/6 gear shifting fork assembly, and the transmission is switched to 6th gear.

Release of 1/3/5/7 gear clutch

• 1/3/5/7 clutch flow solenoid S3

Command to close the 1/3/5/7 clutch flow solenoid S3, so that 1/3/5/7 clutch oil pressure is discharged from the clutch actuator cylinder assembly.

• Clutch actuator cylinder assembly

1/3/5/7 clutch oil pressure is discharged from the clutch actuator cylinder assembly, so that the spring moves the 1/3/5/7 gear clutch piston, and the 1/3/5/7 gear clutch plate is released.

Release of 35 gear shifting fork assembly

• S7 and A37 oil circuit pressure solenoid S5

Command to close S7 and A37 oil circuit pressure solenoid S5, so that S7/37 actuator oil pressure is discharged from A15 oil circuit flow solenoid S7 and 1/3/5/7 gear logic valve.

• A15 oil circuit flow solenoid S7

Command to close A15 oil circuit flow solenoid S7, so that 15 actuator oil pressure is discharged from 1/3/5/7 gear logic valve.

• 1/3/5/7 gear logic valve

5th gear oil pressure is discharged to 15 actuator circuit through 1/3/5/7 gear logic valve. 3rd gear oil pressure is discharged to S7/37 actuator circuit through 1/3/5/7 gear logic valve.

• 3/5 gear shifting fork actuator piston assembly

3rd gear oil pressure and 5th gear oil pressure are discharged from 3/5 gear shifting fork actuator piston assembly, and at the same time, the 3/5 gear shifting fork actuator piston assembly is moved to Neutral (N) position.

Build oil pressure and ready to shift

• 1/3/5/7 clutch pressure solenoid S1

Keep 1/3/5/7 clutch pressure solenoid S1 open, so that energy accumulator oil enters the S1 signal circuit. Then, S1 signal flow is conveyed to 1/3/5/7 clutch flow solenoid S3 through #13 and #20 orifices for shifting to the 7th gear.

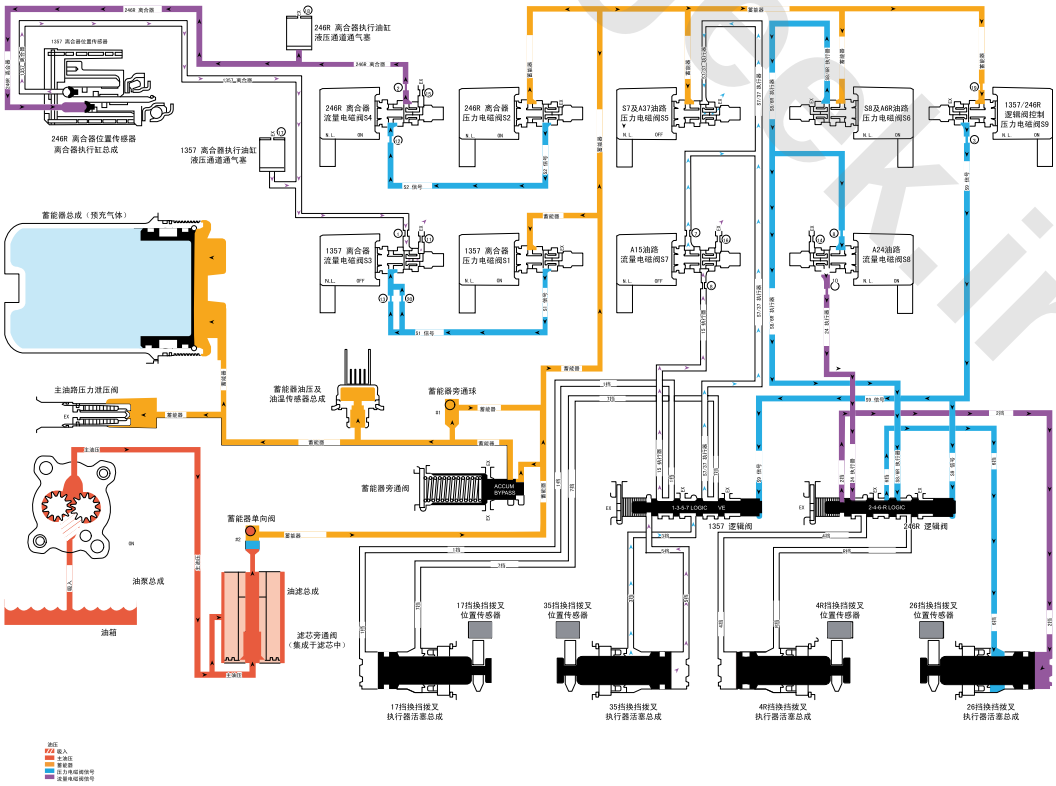

S1212517

www.cargeek.ir

www.cargeek.ir

D7 gear

Power flow in D7 position

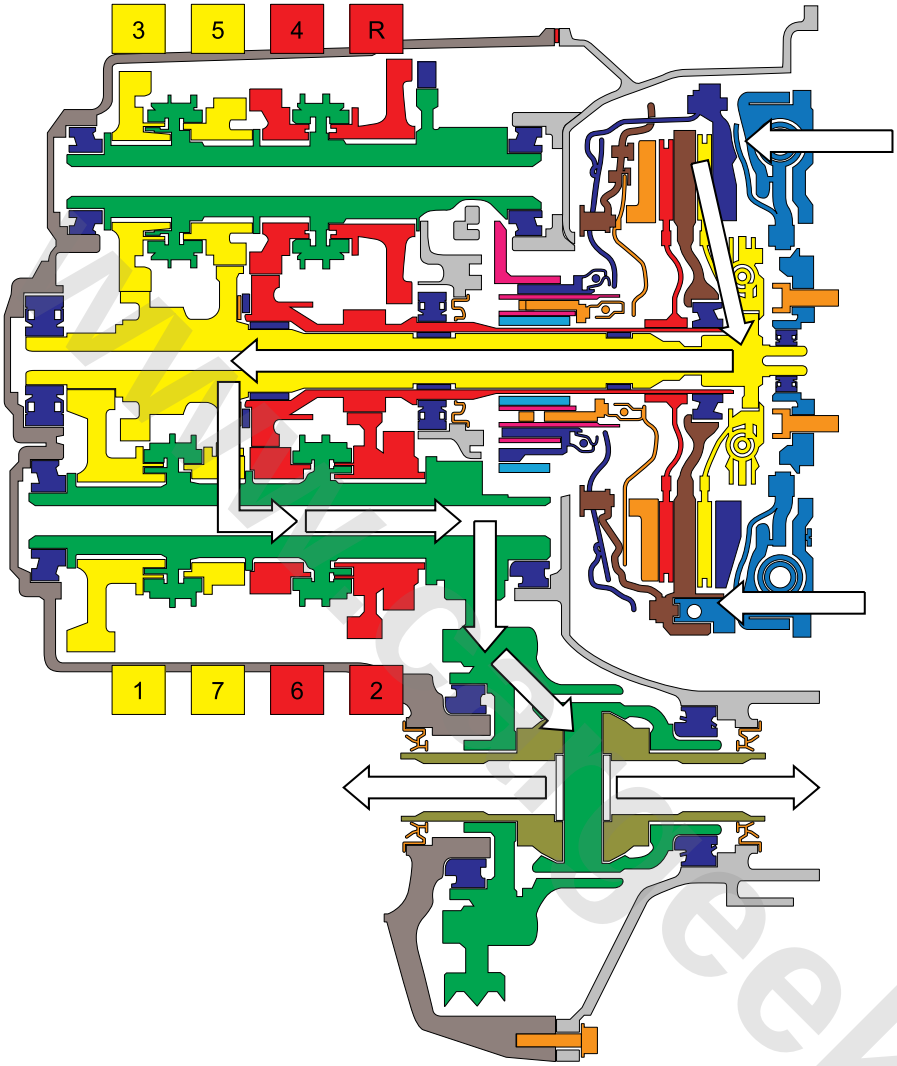

S1212518

With the improvement of vehicle speed and running to the appropriate conditions, the transmission control module (**TCM**) processes the input signals from the transmission input and output shaft speed sensor, throttle position sensor and other vehicle sensors to determine when the command connects 1/3/5/7 clutch flow solenoid S3, S7 and A37 oil circuit pressure solenoid S5 and A15 oil circuit flow solenoid S7, and control 1/3/5/7 gear clutch engagement. At the same time, command to close 2/4/6/R clutch flow solenoid S4, S8, A6R oil circuit pressure solenoid S6, A24 oil circuit flow solenoid S8, and 1357/246R logic valve pressure control solenoid S9. At the same time, the transmission is shifted to 7th gear.

Engage 1/3/5/7 gear clutch

• 1357 clutch flow solenoid S3

Open 1/3/5/7 clutch flow solenoid S3, so that S1 signal enters into 1/3/5/7 clutch circuit. Then, 1/3/5/7 clutch oil is conveyed to the clutch actuator cylinder assembly through #1 orifice.

• Clutch actuator cylinder assembly

1/3/5/7 clutch oil enters the clutch actuator cylinder assembly, then overcomes the spring force, moves the 1/3/5/7 gear clutch piston, and engages the 1/3/5/7 gear clutch plate.

Engage 17 gear shifting fork assembly

• 1357/246R logic valve pressure control solenoid S9

Command to close 1357/246R logic pressure control solenoid S9, so that S9 signal oil pressure is discharged from 1/3/5/7 gear logic valve and 2/4/6/R logic valve.

• S7 and A37 oil circuit pressure solenoid S5

Open S7 and A37 oil circuit pressure solenoid S5, so that energy accumulator oil enters the S7/37 actuator circuit. Then, S7/37 actuator oil is conveyed to A15 oil circuit flow solenoid S7 and 1/3/5/7 gear logic valve through #7 orifice.

• A15 oil circuit flow solenoid S7

www.cargeek.ir

www.cargeek.ir

Open A15 oil circuit flow solenoid S7, so that S7/37 actuator oil enters 15 actuator circuit. Then, 15 actuator oil is conveyed to 1/3/5/7 gear logic valve through #8 orifice.

• 1/3/5/7 gear logic valve

When S9 signal oil pressure is discharged, the spring moves the 1/3/5/7 gear logic valve to the released position, which makes the S7/37 actuator oil enters the 7th gear circuit through the logic valve. 15 actuator oil enters into the 1st gear circuit through 1/3/5/7 gear logic valve. Both the 7th gear oil pressure and 1st gear oil pressure are conveyed to the 17 gear shifting fork actuator piston assembly.

• 1/7 gear shifting fork actuator piston assembly

With the 7th gear oil pressure greater than the 1st gear oil pressure, move the 1/7 gear shifting fork actuator piston assembly to the 7th gear position, so as to drive the 1/7 gear shifting fork assembly, and the transmission is switched to 7th gear.

Release of 2/4/6/R gear clutch

• 2/4/6/R clutch flow solenoid S4

Command to close the 2/4/6/R clutch flow solenoid S4, so that 2/4/6/R clutch oil pressure is discharged from the clutch actuator cylinder assembly.

• Clutch actuator cylinder assembly

2/4/6/R gear clutch oil pressure is discharged from the clutch actuator cylinder assembly, which makes the spring move the 2/4/6/R gear clutch piston, and the 2/4/6/R gear clutch plate is released.

Release of 2/6 gear shifting fork assembly

• S8 and A6R oil circuit pressure solenoid S6

Command to close S8 and A6R oil circuit pressure solenoid S6, so that S8/6R actuator oil pressure is discharged from A24 oil circuit flow solenoid S8 and 2/4/6/R gear logic valve.

• A24 oil circuit flow solenoid S8

Command to close A24 oil circuit flow solenoid S8, so that 24 actuator oil pressure is discharged from 2/4/6/R gear logic valve.

• 2/4/6/R gear logic valve

When S9 signal oil pressure is discharged, the spring moves the 2/4/6/R gear logic valve to the released position, so that the 2nd gear oil pressure and 6th gear oil pressure are discharged from the 2/4/6/R gear logic valve.

• 2/6 gear shifting fork actuator piston assembly

2nd gear oil pressure and 6th gear oil pressure are discharged from 2/6 gear shifting fork actuator piston assembly, and at the same time, the 2/6 gear shifting fork actuator piston assembly is moved to Neutral (N) position.

Build oil pressure and ready to shift

• 2/4/6/R clutch pressure solenoid S2

Keep 2/4/6/R clutch pressure solenoid S2 open, so that energy accumulator oil enters the S2 signal circuit. Then, S2 signal flow is conveyed to 2/4/6/R clutch flow solenoid S4 through #12 orifice, so as to realize downshift.

www.cargeek.ir

www.cargeek.ir

www.cargeek.ir

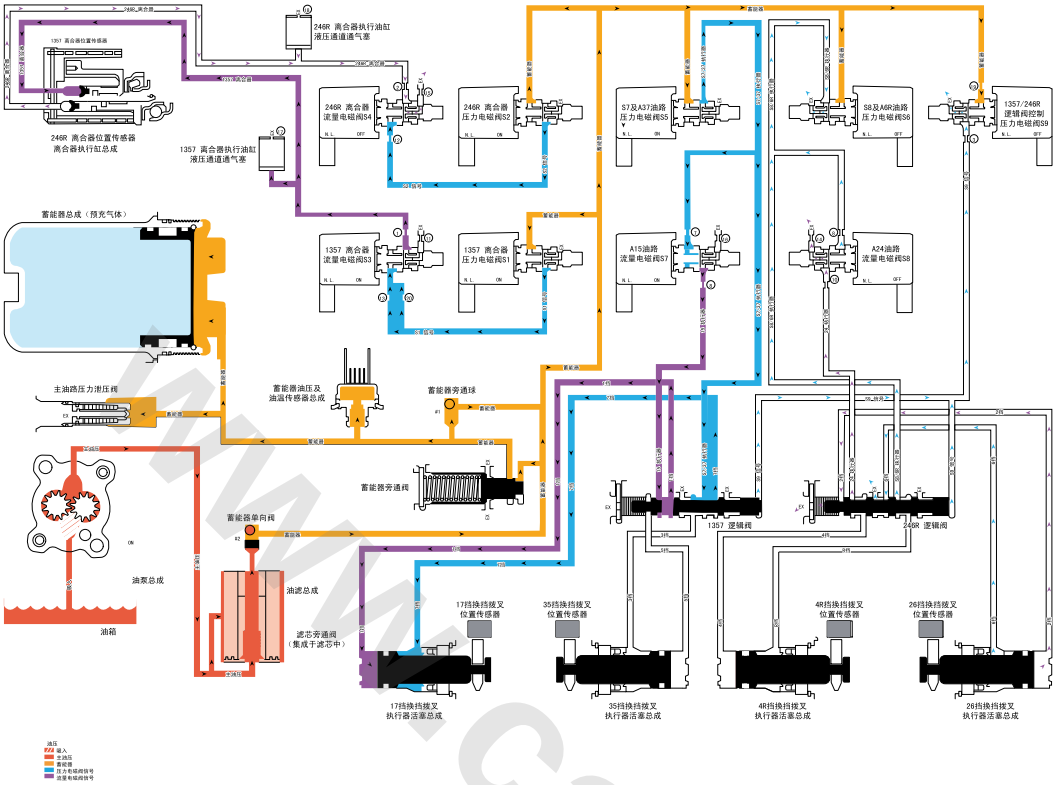

S1212519

www.cargeek.ir

www.cargeek.ir

Service Procedures

Dry Dual Clutch Automatic Transmission Oil - Drain and Refill

Drain

1. Remove the transmission breather pipe and transmission electro-hydraulic control assembly breather pipe from the fixing groove of throttle air intake pipe.
2. Remove 1 bolt fixing the throttle air intake pipe to the engine.

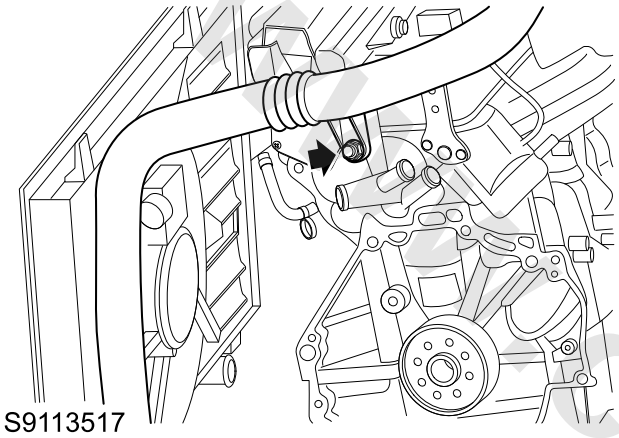

S9113517

3. Turn the buckle fixing the throttle air intake pipe to the throttle end, loosen the quick connector, and disconnect the throttle air intake pipe.

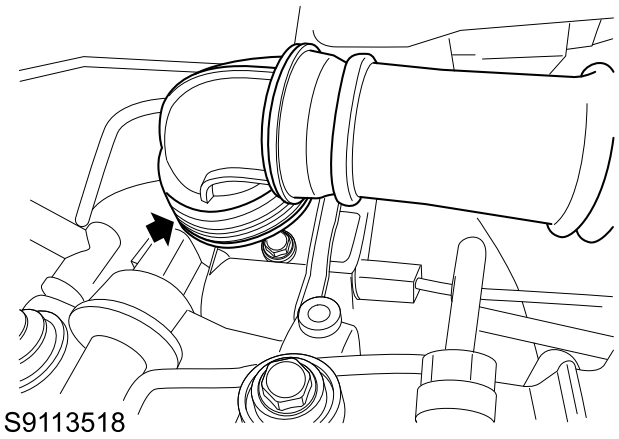

S9113518

4. Remove the throttle air intake pipe.
5. Remove the transmission ventilation tube from the filler plug.
6. Remove the filler plug (2), and discard the filler plug O-ring.
7. Raise the vehicle on an elevator.

Warning: Do not work on or under a vehicle supported only by a jack. Always support the vehicle on safety stands.

8. Place a suitable container below the transmission to collect the transmission oil.
9. Check the surrounding area of each oil plug for oil leakage, and replace the faulty oil plug or sealing gasket if necessary.
10. Remove the drain plug (1), and drain the oil.

Warning: Observe due care when draining gearbox fluid as the fluid can be very hot.

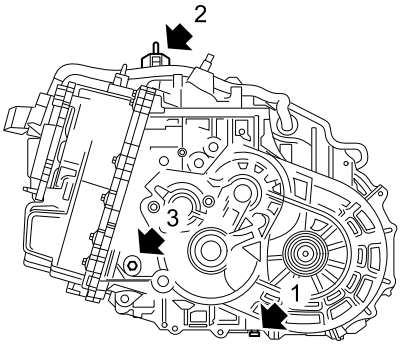

S1213100

Refill

Caution: Only use appointed transmission oil. Do not add any additives.

Caution: Do not reuse the drained transmission oil.

1. Fit the drain plug, tighten to **7–14Nm**, and clean oil stains around the drain plug.
2. Remove the oil level plug (3), and discard it.

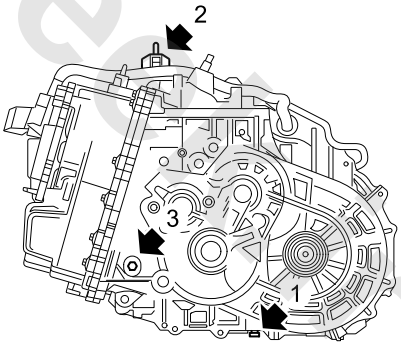

S1213100

3. Lower the vehicle.
4. Fill the transmission oil into the transmission with the special tool **TPT00059** until oil starts to flow out from the oil level inspection hole.

www.cargeek.ir

www.cargeek.ir

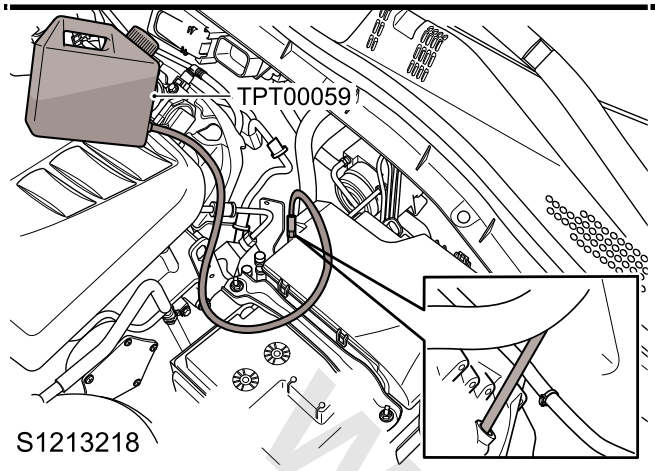

5. Lift the vehicle.
6. Fit the new oil level plug, tighten to **7–14Nm**, and check the torque.
7. Check the transmission oil.

Transmission Oil Check

8. Fit a new filler plug O-ring to the filler plug, and fit the filler plug.
9. Fit the transmission ventilation tube to the filler plug.
10. Fix the throttle air intake pipe to the throttle.
11. Fix the throttle air intake pipe to the engine, fit 1 bolt, tighten to **7–10Nm**, and check the torque.
12. Fix the transmission ventilation tube and automatic transmission hydraulic module ventilation tube to the throttle air intake pipe.

Dry Dual Clutch Automatic Transmission Oil - Check and Refill

Check

Caution: Only use appointed transmission oil. Do not add any additives.

Caution: Do not reuse the drained transmission oil.

1. Check the surrounding area of each oil plug for oil leakage, replace the faulty oil plug as necessary.
2. Lift the vehicle to make wheels get off the ground.
3. Start the engine in P gear and keep it running at idle speed.
4. Depress the brake pedal, shift the gear according to the following sequence: R-N shift twice, N-D shift twice, D-W shift twice (during the gear shift process, the brake pedal is always depressed). After the completion of the gear shifts, shift to N gear.
5. Depress the brake pedal, shift to R gear, then release the brake pedal, allow the wheels to rotate for about 10s; depress the brake pedal until the wheels stop rotating, then release the brake pedal, allow the wheels to rotate for about 10s again.

Warning: All the staff shall be away from the rotary parts to avoid personal injury.

6. Depress the brake pedal, shift to W gear, then release the brake pedal, allow the wheels to rotate for about 10s; depress the brake pedal until the wheels stop rotating, then release the brake pedal, allow the wheels to rotate for about 10s again.

Warning: All the staff shall be away from the rotary parts to avoid personal injury.

7. Connect a scan tool, ensure that the valve body temperature is already between 20-40°C.

- If the valve body temperature is lower than 20°C, repeat Step 6 until the valve body temperature is between 20-40°C;
- If the valve body temperature is higher than 40°C, turn off the engine, repeat Step 3, 4, 5 and 6 after it is cooled down to room temperature, until the valve body temperature is between 20-40°C;

8. Depress the brake pedal until the wheels are fully stopped, shift to P position, and turn off the ignition switch.
9. Remove the oil level hole plug (3) and discard it, and collect spilled oil with a graduated measuring cylinder.

www.cargeek.ir

www.cargeek.ir

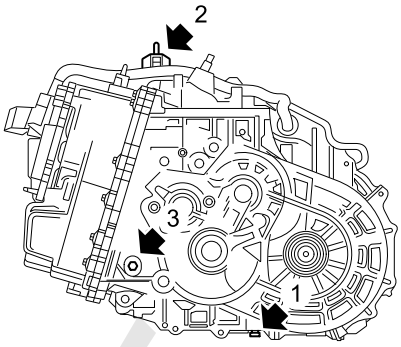

S1213100

10. Drain oil continuously for 5 minutes, and record the color and volume of collected oil.
    a. The new gearbox oil is amber, and becomes dark brown black after driving for several kilometers.
    b. If the drained oil is green, it indicates that the automatic transmission hydraulic module has oil leakage.
    c. If the drained oil exceeds 200ml, the oil must be refilled.
    d. If no oil is drained from the oil level hole, the oil must be refilled.

Refill

Caution: Only use appointed transmission oil. Do not add any additives.

Caution: Do not reuse the drained transmission oil.

1. Remove the filler plug, and discard the filler plug O-ring.
2. Fill the transmission oil into the transmission with the special tool **TPT00059** until oil starts to flow out from the oil level inspection hole.

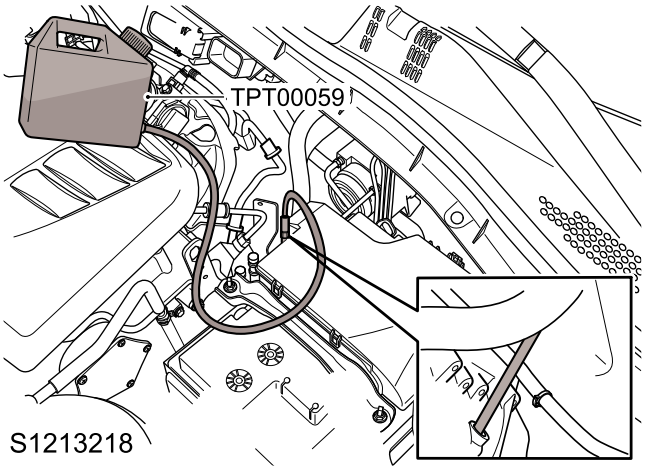

S1213218

3. Record the net weight of filled oil. If more than 200ml of oil must be filled, check for external leakage.
4. Fit the new oil level plug (3), tighten to **7–14Nm**, and check the torque.
5. Fit a new filler plug O-ring to the filler plug, and tighten the filler plug (2).

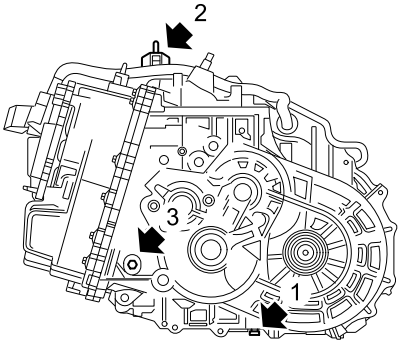

S1213100

www.cargeek.ir

www.cargeek.ir

Dry Dual Clutch Automatic Transmission Assembly

Remove

1. Fix the vehicle on lift.
2. Disconnect the battery negative cable.
3. Remove the battery box bracket.

☞**Battery Box Bracket Remove**

4. Remove the hose - turbocharged intercooler to throttle body.

☞**Hose – Turbocharged Intercooler to Throttle Body Remove**

5. Remove the shift cable ball joint from the shift rocker arm knob (1).
6. Release the C-shaped buckle (2) from the cable bracket, remove the shift cable, fix it, and remove the shift cable.

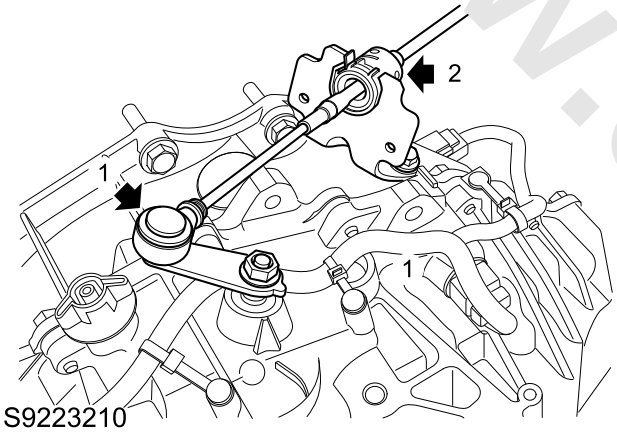

S9223210

7. Remove the transmission harness.

☞**Transmission Harness Remove**

8. Disconnect the rear oxygen sensor connector, and remove 1 bolt (1) fixing the oxygen sensor connector bracket to the transmission.
9. Remove the staple bolt fixing the harness to the transmission and remove the harness.
10. Disconnect the connector (2) on the **TCM**, and remove the harness.

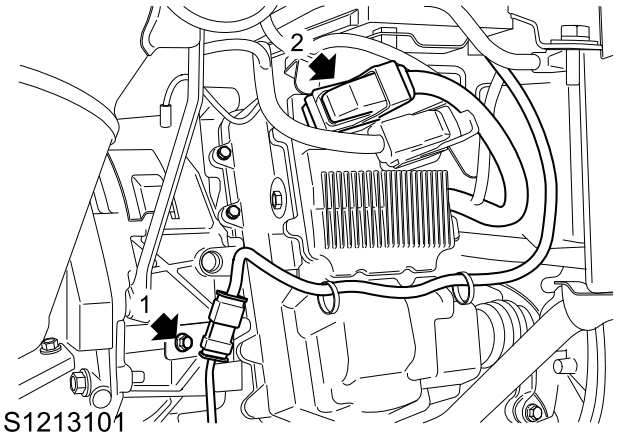

S1213101

11. Remove 2 bolts (1) fixing the catalytic converter bracket to the catalytic converter.
12. Remove 1 bolt fixing the catalytic converter bracket to the transmission (2), and remove the catalytic converter bracket.

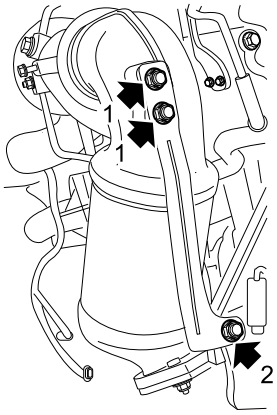

S9313525

13. Remove 1 bolt fixing the upper closing plate to the transmission, and remove the upper closing plate.

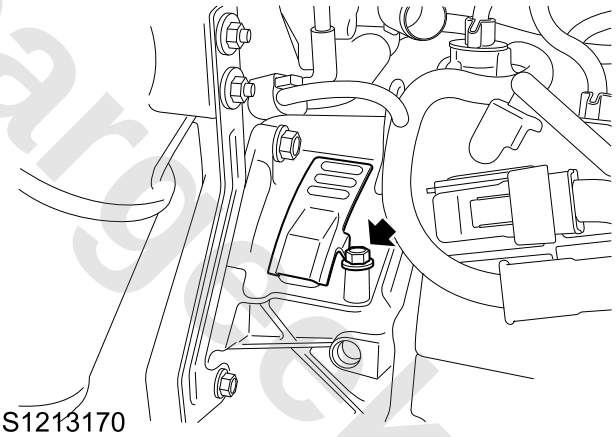

S1213170

14. Rotate the crankshaft, remove the first tangential bolt, after rotating by 120°, remove the second, and finally fit the third.

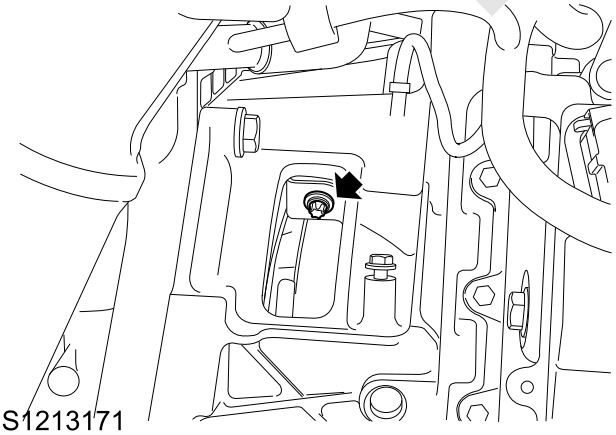

S1213171

15. Fix the engine with the special tool **T10007** and **TEN00070**.

www.cargeek.ir

www.cargeek.ir

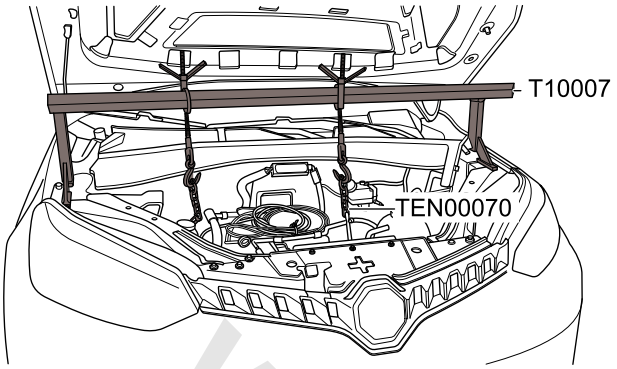

S1113568

16. Remove 4 connecting bolts between the upper part of transmission and the engine.
17. Remove 2 bolts (1) and 1 nut (1) fixing the transmission mount to the transmission. Discard the bolts and nut.
18. Remove 4 bolts (2) fixing the transmission mount to the body, and remove the transmission mount.

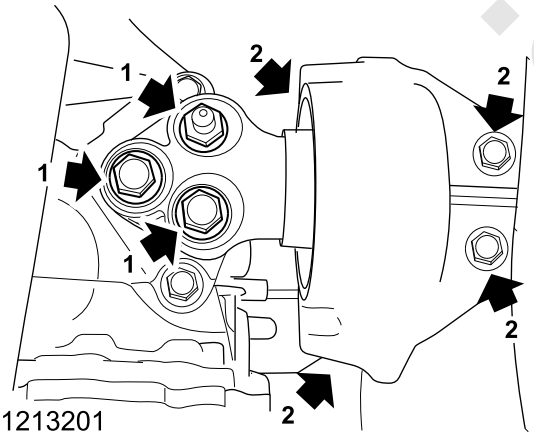

S1213201

19. Raise the vehicle on an elevator.

Warning: Do not work on or under a vehicle supported only by a jack. Always support the vehicle on safety stands.

20. Remove the bottom deflector.

☞**Bottom Deflector Remove**

21. Drain the dry dual clutch automatic transmission oil.

☞**Dry Dual Clutch Automatic Transmission Oil Drain**

22. Remove the front subframe.

☞**Front Subframe Remove**

23. Remove the power-take-off assembly (AWD).

☞**Power-take-off Assembly Remove**

24. Remove the starter.

☞**Starter Motor Remove**

25. Support the bottom of the transmission with a bracket.
26. Remove 3 bolts connecting the transmission to the engine.
27. Move the transmission rightwards to separate the transmission from the engine.
28. Remove the transmission from the bracket.
29. Remove 4 bolts fixing the lower tie bar to the transmission, and remove the lower tie bar bracket.

Refit

1. Clean the connection surface between engine and transmission, and ensure that there is no foreign material.
2. Clean the locating pin on the engine and the locating pin hole of the transmission.
3. Fix the lower tie bar bracket to the transmission, fit 4 bolts, tighten to **97–110Nm**, and check the torque.
4. Fix the transmission to the bracket.
5. Adjust the transmission with other's help, and align the locating pin on the engine with the locating pin hole of the transmission.

Caution: *For the angle formed between flywheel connecting plate and clutch, you must be careful in operation of splicing the transmission to the engine to avoid a collision; otherwise, it may cause functional fault in the transmission!*

6. After the junction surface between engine and transmission is completely fit, fit 4 bottom bolts, tighten to **49–67Nm**, and check the torque.
7. Remove the transmission bracket.
8. Fit the starter.

☞**Starter Motor Refit**

9. Fit power-take-off assembly (AWD).

☞**Power-take-off Assembly Refit**

10. Fit the front subframe.

☞**Front Subframe Refit**

11. Fit the bottom deflector.

☞**Bottom Deflector Refit**

12. Lower the vehicle.
13. Fix the transmission mount to the body, fit 4 bolts, tighten to **55-65Nm**, and check the torque.
14. Fix the transmission mount to the transmission, fit 2 bolts, tighten to **90-110Nm**, fit 1 nut, tighten to **90-110Nm**, and check the torque.
15. Fit 3 connecting bolts between the upper part of transmission and engine, tighten to **49–67Nm**, and check the torque.
16. Remove the special tool **T10007**.
17. Rotate the crankshaft, fit the first tangential bolt, pretighten to 5Nm, after rotating by 120°, fit the

www.cargeek.ir

www.cargeek.ir

second, and finally fit the third.

18. Rotate the crankshaft, tighten the 3 tangential bolts to **30–35Nm**, and check the torque.
19. Fix the upper closing plate to the transmission, fit 1 bolt, tighten to **7.5–10.5Nm**, and check the torque.
20. Fix the catalytic converter bracket to the catalytic converter, fit 2 nuts, tighten to **19–25Nm**, and check the torque.
21. Fix the catalytic converter support to the catalytic converter, fit 1 bolt, tighten to **49–67Nm**, and check the torque.
22. Connect the connector on **TCM**.
23. Fix the harness to the transmission, and connect the oxygen sensor connector.
24. Fix the oxygen sensor connector support to the transmission, fit 1 bolt, tighten to **22–28Nm**, and check the torque.
25. Fit the transmission harness.

Transmission Harness Refit

26. Locate the shift cable to cable bracket and fix with C-shaped clips.
27. Fit the shift cable ball joint to the shift rocker arm bulb.
28. Fix 2 battery box brackets to the front longitudinal beam, fit 6 bolts, tighten to **40-50Nm**, and check the torque.
29. Fit the battery box bracket.

Battery Box Bracket Refit

30. Fill the dry dual clutch automatic transmission oil.

Dry Dual Clutch Automatic Transmission Oil Refill

31. Fit the hose - turbocharged intercooler to throttle body

Hose – Turbocharged Intercooler to Throttle Body Refit

32. Connect the scan tool to the vehicle and access SIPS.
33. Select programming and coding-TCM (transmission control module)-Replace, and operate according to the display on the screen; upon the completion of the update, the part selected to replace is "hydraulic assembly", and click next step to operate according to the display on the screen until the operation is completed. The replacement operation includes update, configuration, and self-learning. For self-learning, see Transmission Control Module (TCM) - 7 speed automatic transmission quick self-learning for details.

Transmission Control Module (TCM) – 7-speed Automatic

Dry Dual Clutch Automatic Transmission Harness

Remove

1. Remove the battery box bracket.

Battery Box Bracket Remove

2. Disconnect the transmission control module connector.

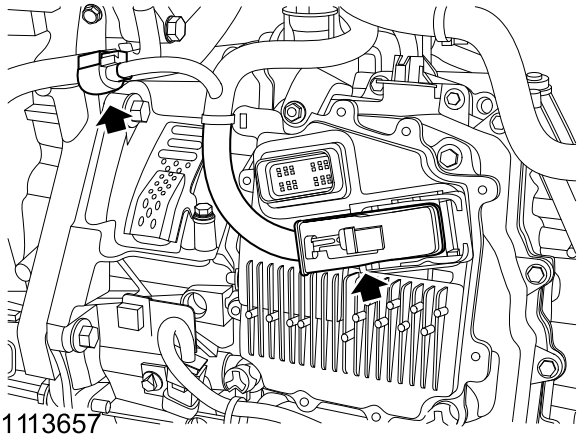

S1113657

3. Disconnect the cylinder position sensor connector of the clutch actuator.
4. Disconnect the transmission gearbox through connector head connector.

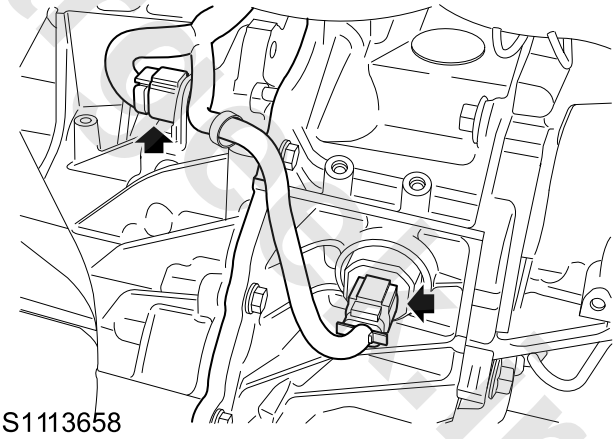

S1113658

5. Disconnect the transmission control harness connector.
6. Remove 1 bolt fixing the ground wire to the transmission housing.
7. Remove 1 nut fixing the transmission harness bracket to **TCM**.
8. Remove the harness buckles from the transmission housing, and remove the transmission harness.

www.cargeek.ir

www.cargeek.ir

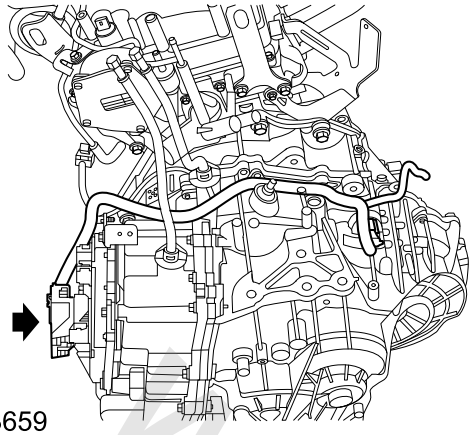

S1113659

Refit

Caution: *Make sure the 2 connecting plugs are aligned before connecting the connector. If they are not aligned or they cannot be inserted by great force, stop the connection. Check the PIN and reconnect the connector.*

1. Fix the transmission harness to the transmission housing, and fix it with harness buckles.
2. Fix the ground wire to the transmission housing, fit 1 bolt, tighten to **7.5–10.5Nm**, and check the torque.
3. Fix the transmission harness bracket to the **TCM**, fit 1 nut, tighten to **8–10Nm**, and check the torque.
4. Connect the transmission control harness connector.
5. Connect the transmission gearbox through connector head connector.
6. Connect the master cylinder position sensor connector of the clutch actuator.
7. Connect the transmission control module connector.
8. Fit the battery box bracket.

Battery Box Bracket Refit

Transmission Control Module (TCM) - Dry Dual Clutch Automatic Transmission

Remove

1. Fix the vehicle on lift.
2. Disconnect the battery negative cable.
3. Remove 2 bolts fixing the coolant expansion tank to the vehicle frame, and then remove the coolant expansion tank.

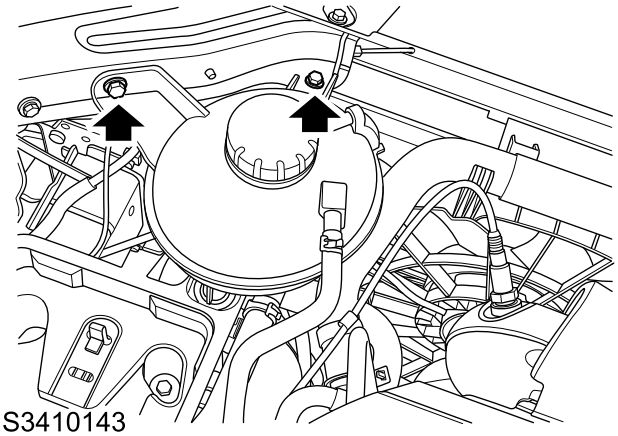

S3410143

4. Disconnect the transmission control module (**TCM**) connector.
5. Remove 2 bolts fixing the transmission control module (**TCM**) to the transmission hydraulic control assembly.
6. Lift the vehicle.
7. Remove the bottom deflector.

Bottom Deflector Remove

8. Remove 2 bolts fixing the transmission control module (**TCM**) to the transmission hydraulic control assembly, and remove the transmission control module (**TCM**).

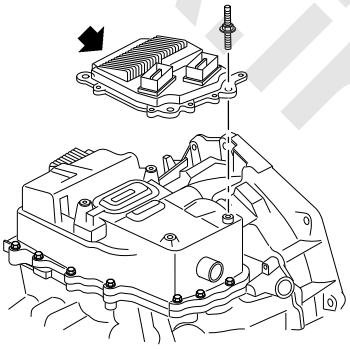

S1213102

Refit

Caution: *Make sure the 2 connecting plugs are aligned before connecting the connector, then connect them. If they are not aligned, or great insertion force cannot push them in, stop the connection. Check the PINs for abnormal damage and then insert again.*

www.cargeek.ir

www.cargeek.ir

1. Fix the transmission control module (**TCM**) to the transmission hydraulic module, fit 2 bolts, tighten to **7.5–10.5Nm**, and check the torque.
2. Fit the bottom deflector.

Bottom Deflector Refit

3. Lower the vehicle.
4. Fit 2 bolts fixing the transmission control module (**TCM**) to the transmission hydraulic module, tighten to **7.5–10.5Nm**, and check the torque.
5. Connect the transmission control module (**TCM**) connector.
6. Fix the coolant expansion tank to the vehicle frame; fit two bolts and tighten to **4–6Nm** and check the torque.
7. Connect the battery negative cable.
8. Connect the scan tool to the vehicle and access SIPS.
9. Select programming and coding - TCM (transmission control module) - Replace, and operate according to the display on the screen; upon the completion of the update, the part selected to replace is "hydraulic assembly", and click next step to operate according to the display on the screen until the operation is completed. The replacement operation includes update, configuration, and self-learning. For self-learning, see Transmission Control Module (TCM) - 7 speed automatic transmission quick self-learning for detail.

Transmission Control Module (TCM) – 7-speed Automatic

Transmission Electro-Hydraulic Control Assembly

Remove

1. Use VDS to perform transmission accumulator pressure relief operation. See Transmission Control Module (TCM) - 7 speed automatic transmission accumulator pressure relief for details.

Transmission Control Module (TCM) – 7-speed Automatic

2. Drain the dry dual clutch automatic transmission oil.

Dry Dual Clutch Automatic Transmission Oil Drain

3. Remove the battery box bracket.

Battery Box Bracket Remove

4. Remove the transmission control module (**TCM**).

Transmission Control Module Remove

5. Remove the cooling fan.

Cooling Fan Assembly Remove

6. Remove the hose - turbocharged intercooler to throttle body.

Hose – Turbocharged Intercooler to Throttle Body Remove

7. Disconnect the transmission control module connector.
8. Loosen the buckles, and move away harnesses from the transmission electro-hydraulic control assembly and control module.
9. Remove 12 bolts fixing the transmission electro-hydraulic control assembly to the transmission housing.

Caution: *Do not remove 3 bolts fixing the controller to the valve body actuator, otherwise, the transmission electro-hydraulic control assembly can be damaged.*

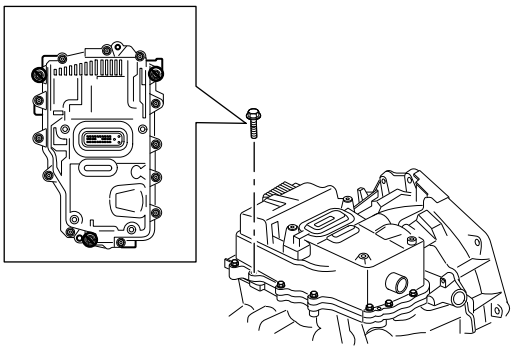

S1213103

10. As shown, correctly fit the special tools **TPT00202** (2), **TPT00203** (1) to the transmission electro-hydraulic control assembly.

www.cargeek.ir

www.cargeek.ir

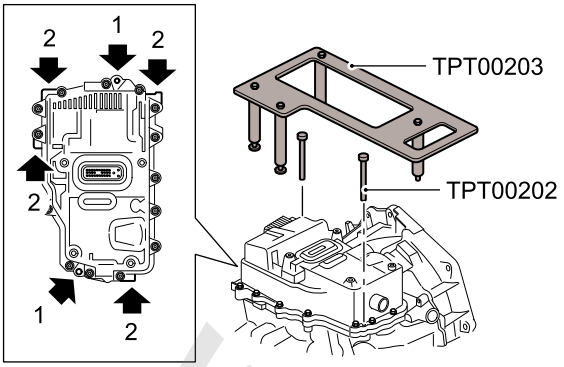

S1213104

11. Remove the transmission electro-hydraulic control assembly along the vertical direction of the transmission housing with the special tool **TPT00202**, and discard the sealing gasket.

Caution: *If the transmission electro-hydraulic control assembly is not removed along the vertical direction of the transmission housing, the clutch slave cylinder seal may be damaged.*

Refit

Caution: *Make sure the 2 connecting plugs are aligned before connecting the connector, then connect them. If they are not aligned or if they cannot be inserted by great force, stop the connection. Check the PIN and reconnect the connector.*

1. Clean the junction surface between transmission electro-hydraulic control assembly and transmission housing, and ensure that there is no foreign material.
2. Fix a new sealing gasket to the transmission housing.
3. Locate the actuator piston to the middle position with the special tool **TPT00200**.

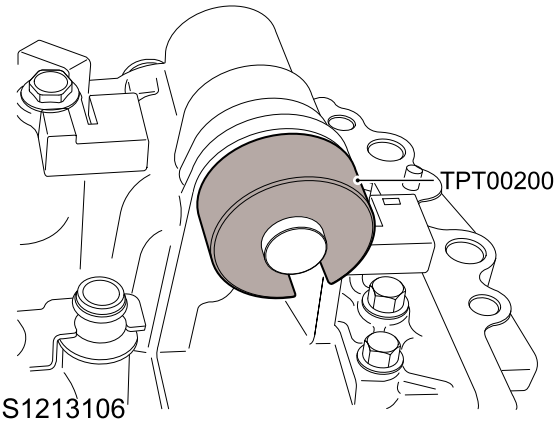

S1213106

4. Fit the transmission electro-hydraulic control assembly to the transmission with special tools **TPT00202**, **TPT00203**.

Caution: *If the transmission electro-hydraulic control assembly is not fitted along the vertical direction of the transmission housing, the clutch slave cylinder seal may be damaged.*

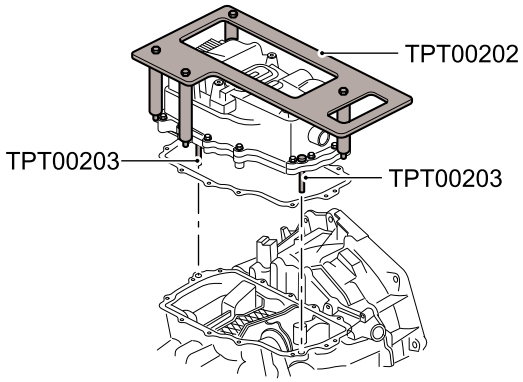

S1213105

5. Remove the special tools **TPT00202**, **TPT00203**.
6. Fit12 fixing bolts of transmission electro-hydraulic control assembly, tighten to **7.5–10.5Nm** in the sequence as shown, and check the torque.

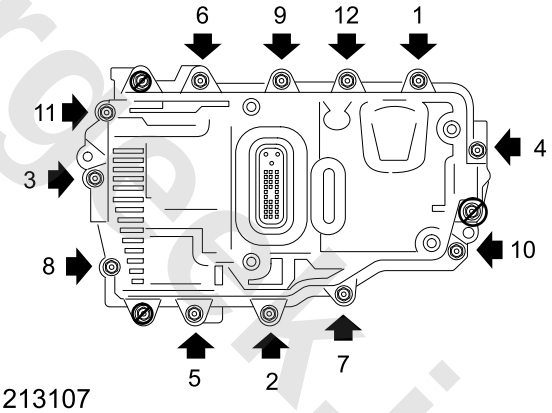

S1213107

7. Reset the harnesses on the transmission electro-hydraulic control assembly and control module, and fix it with buckles.
8. Fit the hose - turbocharged intercooler to throttle body

☞**Hose – Turbocharged Intercooler to Throttle Body Refit**

9. Fit the cooling fan assembly.

☞**Cooling Fan Assembly Refit**

10. Fit the transmission control module (**TCM**).

☞**Transmission Control Module Refit**

11. Fix the battery box to the bracket, fit 4 bolts, tighten to **19-25Nm**, and check the torque.
12. Fit the battery box bracket.

☞**Battery Box Bracket Refit**

www.cargeek.ir

www.cargeek.ir

13. Fill the dry dual clutch automatic transmission oil.

Dry Dual Clutch Automatic Transmission Oil Refill

14. Connect the scan tool to the vehicle and access SIPS.
15. Select programming and coding-TCM (transmission control module)-Replace, and operate according to the display on the screen; upon the completion of the update, the part selected to replace is "electro-hydraulic assembly", and click next step to operate according to the display on the screen until the operation is completed. The replacement operation includes update, configuration, and self-learning. For self-learning, see Transmission Control Module (TCM) - 7 speed automatic transmission quick self-learning for detail.

Transmission Control Module (TCM) - 7-speed Automatic

16. When replacing electro-hydraulic control assembly and transmission control module, select the part "Electro-Hydraulic Control Assembly and Transmission Control Module" to be replaced in step 16, and other operations are same.

Fork Position Sensor Assembly

Remove

1. Remove the transmission electro-hydraulic control assembly.

Transmission Electro-Hydraulic Control Assembly Remove

2. Disconnect 4 shifting fork position sensor connectors.
3. Remove 4 bolts (1) fixing 4 shifting fork position sensors to the transmission electro-hydraulic control assembly, and remove the shifting fork position sensors.

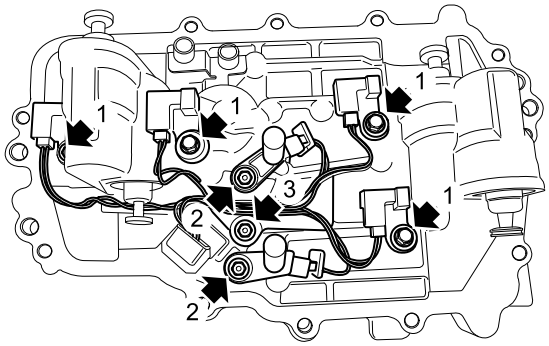

S1213108

Refit

1. Fix 4 shifting fork position sensors to the transmission electro-hydraulic control assembly respectively, fit 4 bolts, tighten to **7.5–10.5Nm**, and check the torque.
2. Connect 4 shifting fork position sensor connectors.
3. Fit the transmission electro-hydraulic control assembly.

Transmission Electro-Hydraulic Control Assembly Refit

www.cargeek.ir

www.cargeek.ir

Input Speed Sensor Assembly

Remove

1. Remove the transmission electro-hydraulic control assembly.

☞**Transmission Electro-Hydraulic Control Assembly Remove**

2. Disconnect 2 input speed sensor connectors.
3. Remove 2 bolts (2) fixing 2 input speed sensors to the transmission electro-hydraulic control assembly, and remove the input speed sensors.

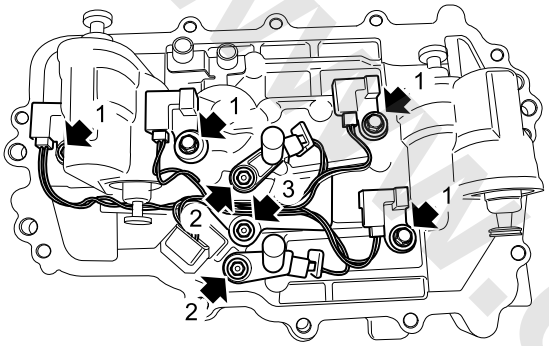

S1213108

Refit

1. Fix 2 input speed sensors to the transmission electro-hydraulic control assembly respectively, fit 2 bolts, tighten to **7.5–10.5Nm**, and check the torque.
2. Connect 2 input speed sensor connectors.
3. Fit the transmission electro-hydraulic control assembly.

☞**Transmission Electro-Hydraulic Control Assembly Refit**

Transmission Electro-Hydraulic Control Assembly Harness

Remove

1. Remove the transmission electro-hydraulic control assembly.

☞**Transmission Electro-Hydraulic Control Assembly Remove**

2. Disconnect 2 input speed sensor connectors and 4 fork position sensor connectors.
3. Remove 1 bolt (3) fixing the electro-hydraulic control assembly harness to the transmission electro-hydraulic control assembly, and remove the transmission electro-hydraulic control assembly.

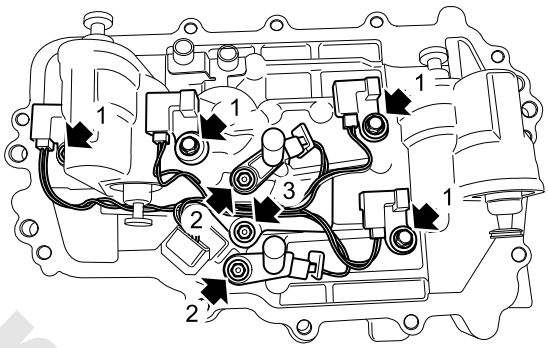

S1213108

Refit

Caution: *Make sure the 2 connecting plugs are aligned before connecting the connector, then connect them. If they are not aligned or if they cannot be inserted by great force, stop the connection. Check the PIN and reconnect the connector.*

1. Fix the transmission electro-hydraulic control assembly harness on the transmission electro-hydraulic control assembly, fit 1 bolt and tighten to **7.5–10.5Nm** and check the torque.
2. Connect 2 input speed sensor connectors and 4 fork position sensor connectors.
3. Fit the transmission electro-hydraulic control assembly.

☞**Transmission Electro-Hydraulic Control Assembly Refit**

www.cargeek.ir

www.cargeek.ir

Dual Clutch Assembly - Dry Dual Clutch Automatic Transmission

Remove

1. Remove the dry dual clutch automatic transmission assembly.

☞ **Dry Dual Clutch Automatic Transmission Assembly Remove**

2. Remove the snap ring, and remove the clutch driven hub.

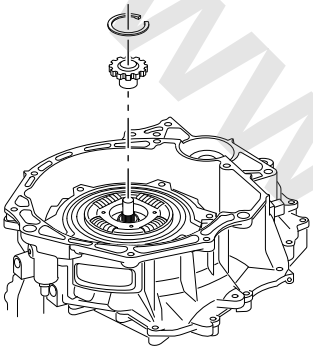

S1213109

3. Fit the special tool **TPT00199** to the clutch housing, and the supporting feet shall be about 120° apart.
4. Press down the clutch assembly with the central installer of the special tool **TPT00199**, continue to press until enough space is set aside for removal of clutch retainer ring; once the enough space required is obtained, reduce the center bolt torque to 3Nm, tighten 3 compression screws by hand, and fix the clutch in a compressed state.

Caution: *The torque applied to the center bolt shall not exceed 11.6Nm.*

5. Remove the central installer of the special tool **TPT00199**.
6. Remove the snap ring and input shaft bearing shim, and remove the special tool **TPT00199**.

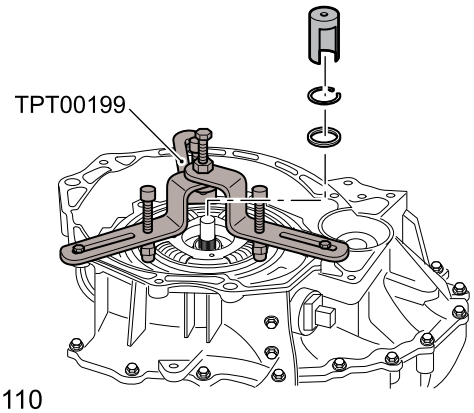

S1213110

7. Fix the special tool **TPT00199** to the thread boss on the clutch assembly at interval of 120°.

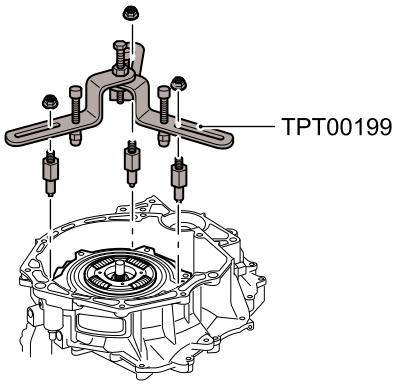

S1213111

8. Fit the central installer of the special tool **TPT00199** to the hollow shaft.
9. Align the central bolt of the special tool **TPT00199** with the top groove in the installer and tighten, then pull out the clutch assembly from the hollow shaft.

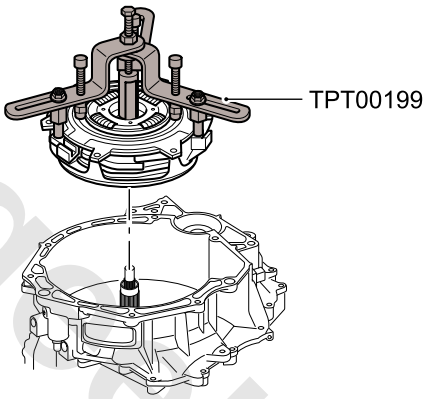

S1213112

10. Remove the special tool **TPT00199** from the clutch assembly.

Refit

1. Check the original clutch retainer ring for damage, if there is no damage, continue to use it, if any, measure and select a new clutch retainer ring.
2. Measure from the clutch housing surface to the top of the clutch retainer ring, and select a suitable gasket based on the measured value (a).

Caution: *Just measure the input shaft bearing shim when replacing the clutch housing or input shaft.*

www.cargeek.ir

www.cargeek.ir

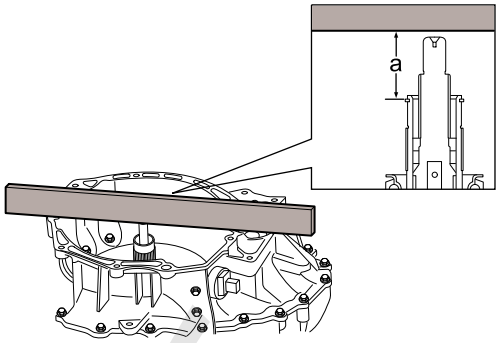

S1213113

3. Remove residual grease on the clutch assembly spline, and apply a thin layer of new grease.
4. Fit the clutch assembly.
5. Fit the special tool **TPT00199** to the clutch housing, and the supporting feet shall be about 120° apart.
6. Press the clutch assembly into a hollow shaft with the special tool **TPT00199**, continue to press until enough space is set aside for clutch retainer ring refit; once the enough space required is obtained, reduce the center screw torque by 3Nm, tighten 3 compression screws by hand, and fix the clutch in a compressed state.

Caution: *The torque applied to the center bolt shall not exceed 11.6Nm.*

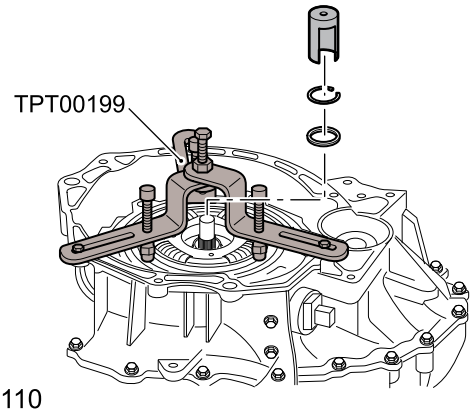

S1213110

7. Remove the central installer of the special tool **TPT00199**.
8. Fit a new input shaft bearing shim to the even number input shaft.
9. Fit the snap ring into the snap ring groove with snap ring pliers.

Caution: *The angle between the opening in the installer and the clutch retainer ring opening is 180°; otherwise, the clutch retainer ring may be damaged.*

10. Fit the special tool **TPT00199** to the thread boss on the clutch assembly at interval of 120°.
11. Fit the central installer of the special tool **TPT00199** to the hollow shaft.
12. Align the central bolt of the special tool **TPT00199** with the top groove in the installer and tighten, then pull the clutch assembly back to the right position.

Caution: *The torque applied to the center bolt shall not exceed 11.6Nm.*

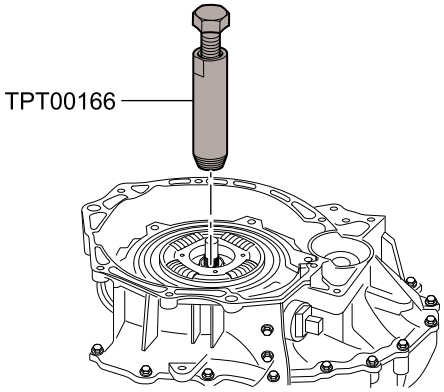

S1213115

13. Remove residual grease on the direct gear clutch hub spline, apply a thin layer of new grease, and fit the direct gear clutch hub to the clutch assembly.
14. Fit the clutch retainer ring.
15. Fit the dry dual clutch automatic transmission assembly.

☞ **Dry Dual Clutch Automatic Transmission Assembly Refit**

www.cargeek.ir

www.cargeek.ir

Clutch Actuator Cylinder Assembly - Dry Dual Clutch Automatic Transmission

Remove

1. Remove the clutch assembly.

☞ **Clutch Assembly Remove**

2. Remove 2 bolts fixing the clutch actuator cylinder position sensor harness cover to the clutch housing, and remove the clutch actuator cylinder position sensor harness cover.

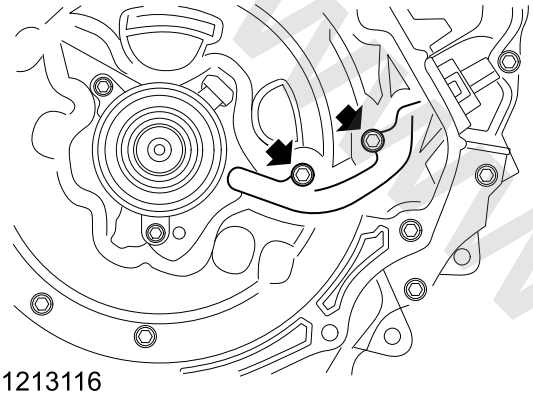

S1213116

3. Remove the clutch actuator cylinder position sensor connector from the clutch housing.
4. Remove 3 bolts fixing the clutch actuator cylinder to the clutch housing, and remove the clutch actuator cylinder and discard the gasket.

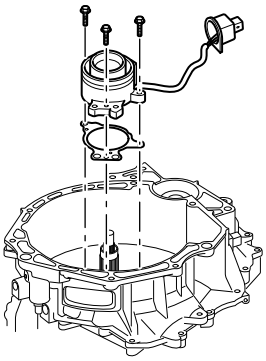

S1213117

Refit

1. Clean the contact surface between clutch actuator cylinder and clutch housing.
2. Fix a new gasket to the clutch housing through a locating pin.
3. Fix the clutch actuator cylinder to the transmission housing, fit 3 bolts, tighten to **12.5–14.5Nm**, and check the torque.
4. Fit the clutch actuator cylinder position sensor connector to the clutch housing.
5. Fix the clutch actuator cylinder position sensor harness cover to the transmission housing, fit 2 bolts, tighten to **7.5–10.5Nm**, and check the torque.
6. Fit the clutch assembly.

☞ **Clutch Assembly Refit**

www.cargeek.ir

www.cargeek.ir

Shift Shaft Oil Seal - Transmission Housing

Remove

1. Place the shift lever in "P" position.
2. Disconnect the battery negative cable.
3. Remove the battery box bracket.

Battery Box Bracket Remove

4. Turn the clamp fixing the hose to the throttle end, loosen the quick joint, and disconnect the hose from the throttle.

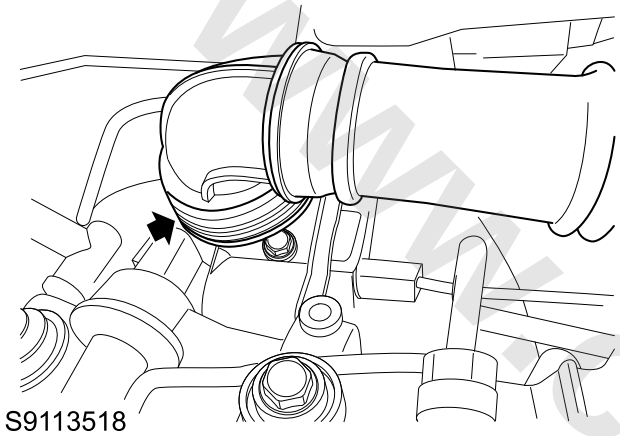
S9113518

5. Remove 1 bolt fixing the hose assembly to the engine, and remove the hose.

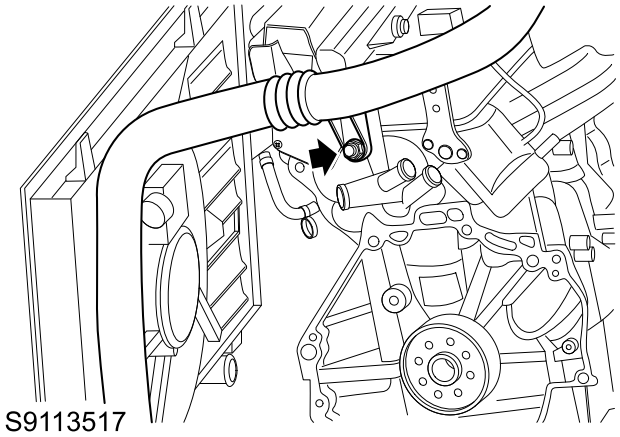
S9113517

6. Remove the shift cable from the shift rocker arm.
7. Remove 1 nut fixing the shift rocker arm to the shift shaft, mark the position of shift rocker arm, and remove the shift rocker arm.
8. Remove the shift shaft oil seal with a remover of the special tool **TPT00167**.

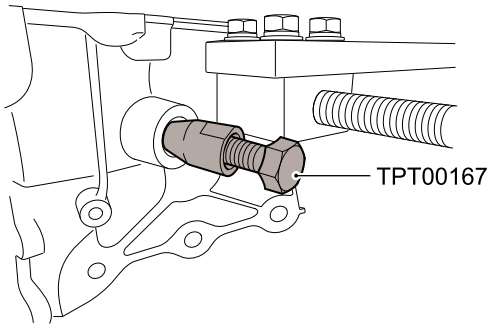

S1213138

Refit

1. Clean the oil seal groove.
2. Fit a new oil seal to the transmission housing with an installer of the special tool **TPT00167**.

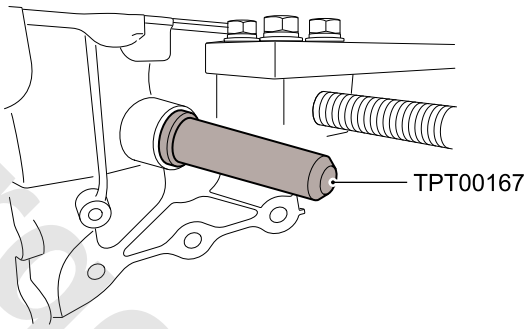

S1213118

3. Fix the shift rocker arm to the shift shaft according to the mark position, fit 1 nut, tighten to **10–14Nm**, and check the torque.
4. Fit the shift cable to the shift rocker arm.
5. Fix the hose (turbocharger intercooler to throttle body) quick joint to the throttle, and fix it with clamps.
6. Fix the hose (turbocharger intercooler to throttle body) to the engine, fit 1 bolt and tighten to **7–10Nm**.
7. Fit the battery box bracket.

Battery Box Bracket Refit

www.cargeek.ir

www.cargeek.ir

Input Shaft Housing Oil Seal - Clutch Housing

Remove

1. Remove the clutch actuator cylinder assembly.

Clutch Actuator Cylinder Assembly Remove

2. Remove the input shaft housing oil seal with the special tool **TPT00195**.

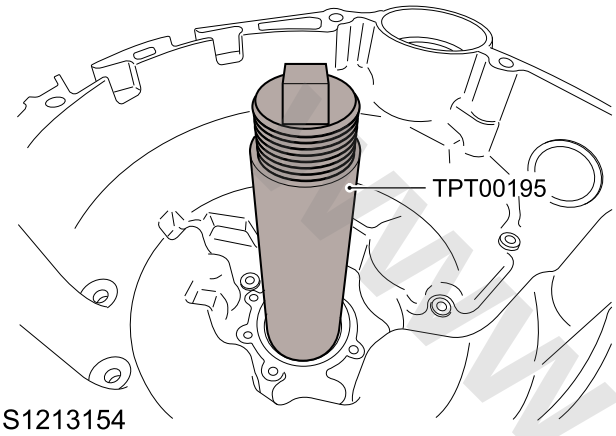

S1213154

Refit

1. Clean the oil seal groove.
2. Fit a new oil seal with the installer of the special tool **TPT00168**.

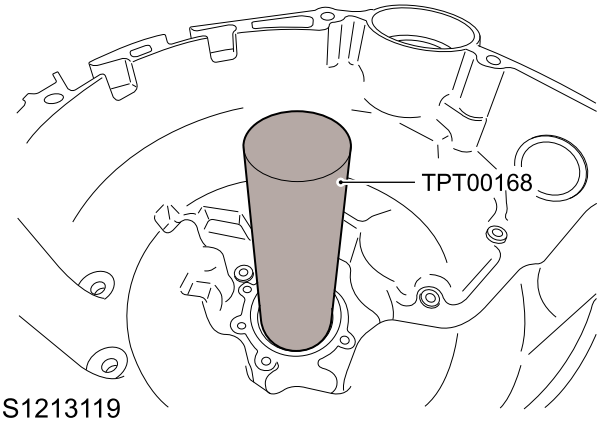

S1213119

3. Fit the clutch actuator cylinder assembly.

Clutch Actuator Cylinder Assembly Refit

Differential Oil Seal - Transmission Housing

Remove

1. Raise the vehicle on an elevator.

Warning: Do not work on or under a vehicle supported only by a jack. Always support the vehicle on safety stands.

2. Drain the dry dual clutch automatic transmission oil.

Dry Dual Clutch Automatic Transmission Oil Drain

3. Remove the front axle left drive shaft.

Front Axle Left Drive Shaft Remove

4. Remove the differential oil seal and discard it.

Refit

1. Clean the oil seal groove.
2. Fit a new oil seal with special tools **TPT00198**, **TPT00169**.

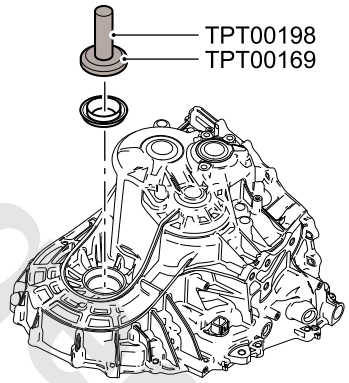

S1213120

3. Fit the front axle left drive shaft.

Front Left Axle Shaft Assembly Refit

4. Fill the dry dual clutch automatic transmission oil.

Dry Dual Clutch Automatic Transmission Oil Refill

www.cargeek.ir

Differential Oil Seal - Clutch Housing

Remove

1. Raise the vehicle on an elevator.

Warning: Do not work on or under a vehicle supported only by a jack. Always support the vehicle on safety stands.

2. Drain the dry dual clutch automatic transmission oil.

Dry Dual Clutch Automatic Transmission Oil Drain

3. Remove front axle right drive shaft (2WD).

Front Axle Right Drive Shaft Remove

4. Remove the power-take-off assembly (AWD).

Power-take-off Assembly Remove

5. Remove the differential oil seal and discard it (2WD).
6. Remove the differential oil seal and discard it (4WD) with special tool **TPT00225**.

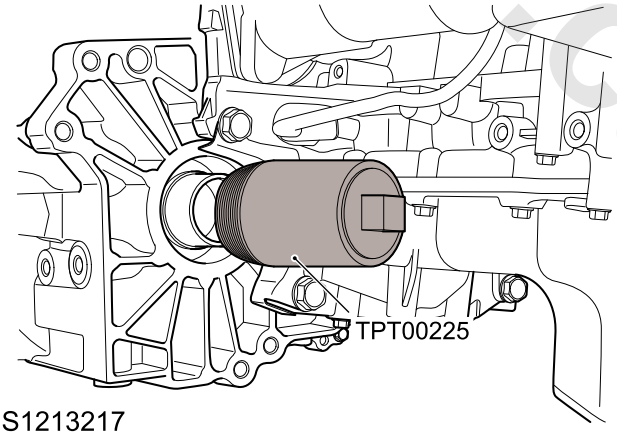

S1213217

Refit

1. Clean the oil seal groove.
2. Fit a new oil seal (4WD) with special tool **TPT00204**.

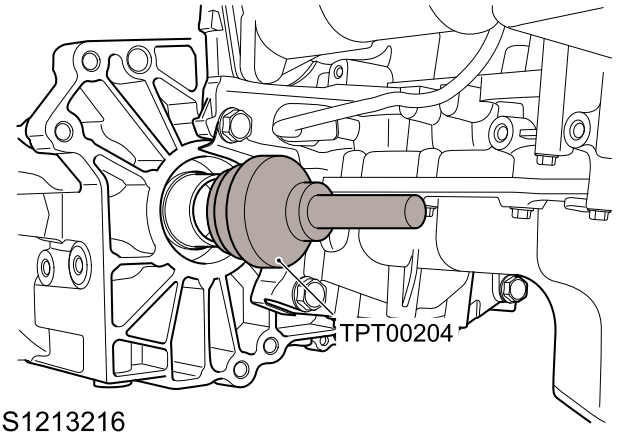

S1213216

3. Fit a new oil seal (2WD) with special tools **TPT00198**, **TPT00169**.

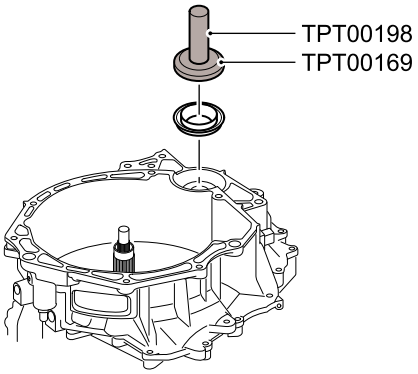

S1213121

4. Fit power-take-off assembly (AWD).

Power-take-off Assembly Refit

5. Fit front axle right drive shaft (2WD).

Front Axle Right Drive Shaft Refit

6. Fill the dry dual clutch automatic transmission oil.

Dry Dual Clutch Automatic Transmission Oil Refill

www.cargeek.ir

www.cargeek.ir

Dry Dual Clutch Automatic Transmission Disassembly

Remove

1. Remove the dry dual clutch automatic transmission assembly.

Dry Dual Clutch Automatic Transmission Assembly Remove

2. Fix the transmission to the fixed bracket with the special tool **TPT00188**.

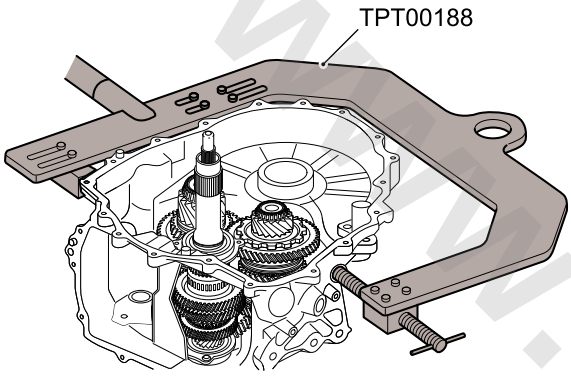

S1213173

3. Remove the transmission electro-hydraulic control assembly.

Transmission Electro-Hydraulic Control Assembly Remove

4. Remove the clutch actuator cylinder assembly.

Clutch Actuator Cylinder Assembly Remove

5. Remove 5 fixing bolts (1) from the front ball bearing cover plate of input shaft and discard.
6. Remove 18 bolts fixing the clutch housing to the transmission housing (2).
7. Remove the clutch housing (3), and discard the washer (4).
8. Remove the magnetic steel (5) from the transmission housing.

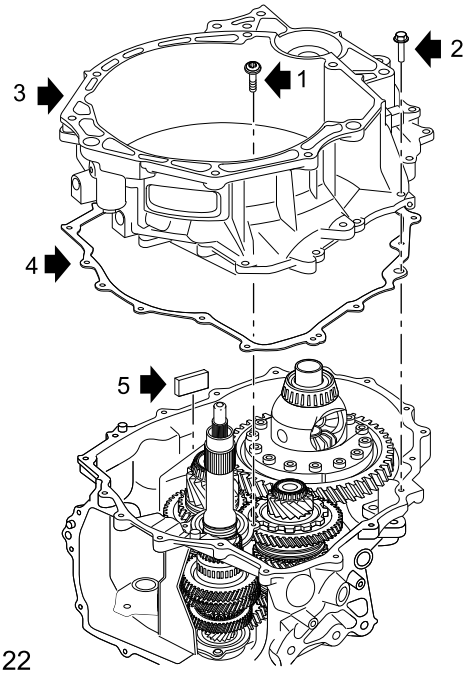

S1213122

9. Remove the differential assembly.

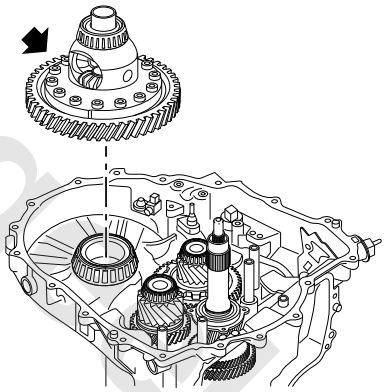

S1213123

10. Remove 1 bolt fixing the shift retaining spring to the transmission housing, and remove the shift retaining spring.

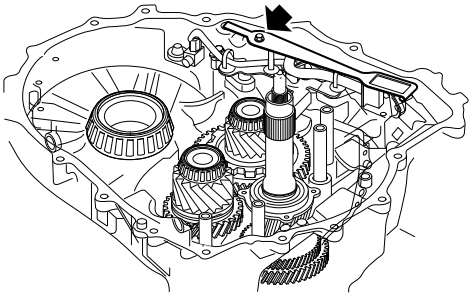

S1213124

11. Disconnect the connector, and remove the transmission internal harness assembly from the parking ratchet bracket assembly (1).

www.cargeek.ir

12. Remove 2 bolts fixing the parking pawl bracket assembly to the transmission case, and remove the parking bracket assembly of the parking pawl bracket (2).

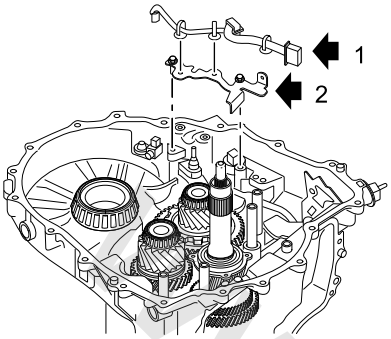

S1213125

13. Remove the parking lever (1), reset spring (2), pawl shaft (3), and pawl (4).

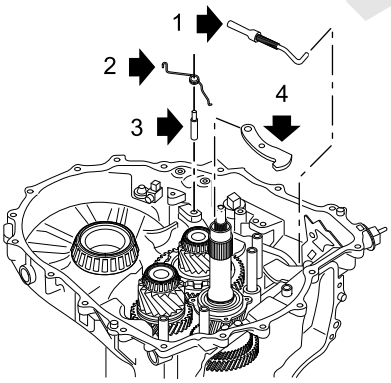

S1213126

14. Remove the parking control lever pin (1) and conduit (2).
15. Remove 1 bolt fixing the parking control lever bracket to the transmission housing, and remove the parking control lever bracket (3).
16. Remove 1 bolt fixing the automatic transmission output shaft sensor to the transmission housing, and remove the automatic transmission output shaft sensor (4).

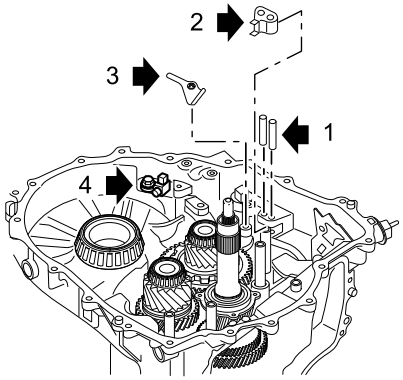

S1213127

17. Fit the special tool **TPT00165** to the transmission housing.

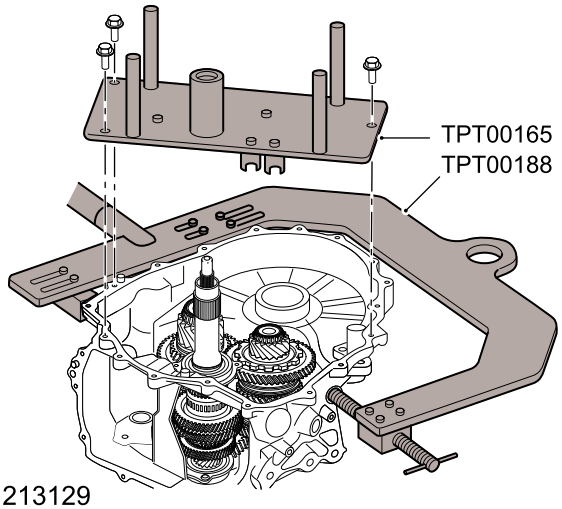

S1213129

18. With the special tool **TPT00165** as the handle, remove the special tool **TPT00188** from the work bench together with the transmission.
19. Support the transmission onto the work bench through the supporting feet of the special tool **TPT00165**.
20. Remove 3 input shaft bearing seat bolts.
21. Remove the special tool **TPT00188**.

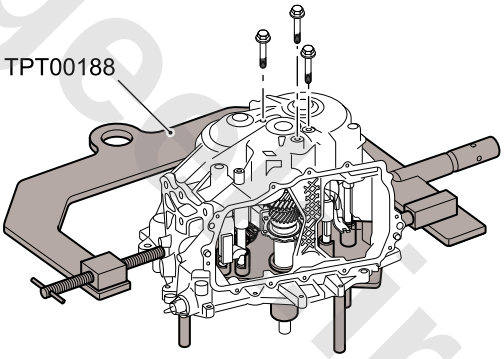

S1213130

22. Remove 3 bolts fixing the special tool **TPT00165** to the transmission housing, and remove the transmission housing.

www.cargeek.ir

www.cargeek.ir

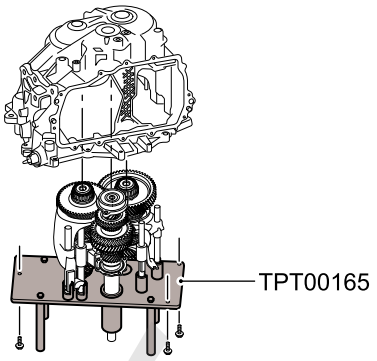

S1213131

23. First remove 3/5 gear shifting fork (1) from the special tool **TPT00165**, remove 4/R gear shifting fork (2), and then remove 345R output shaft (3).
24. First remove 1/7 gear shifting fork (4) from the special tool **TPT00165**, remove 2/6 gear shifting fork (5), and then remove 1267 output shaft (6).
25. Remove the input shaft assembly (7) from the special tool **TPT00165**.

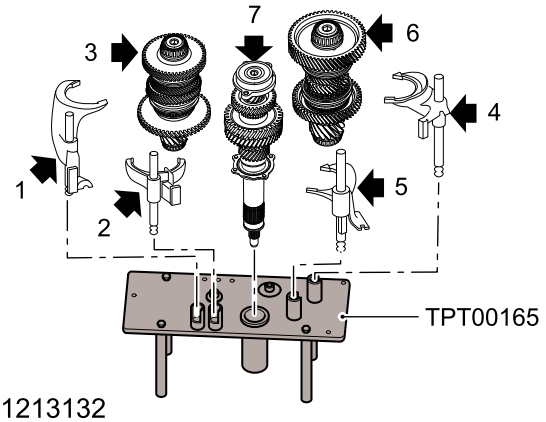

S1213132

26. Remove the shift shaft stop pin from the special tool **TPT00189**.

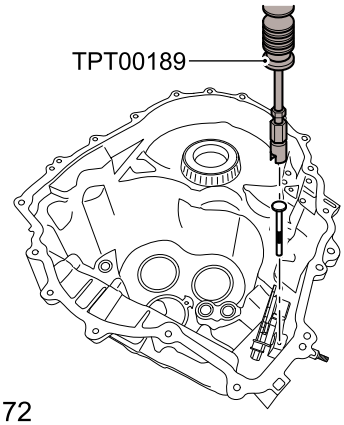

S1213172

27. Remove the shift shaft position switch.
28. Remove 2 bolts fixing 1267 output shaft oil guide groove and input shaft oil guide groove to the transmission housing, and remove 2 oil guide grooves.

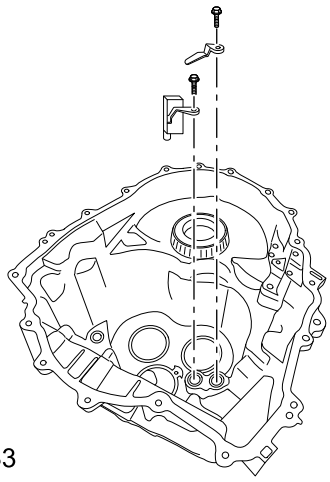

S1213133

29. Remove the differential cone bearing from the transmission housing with a bearing extractor.

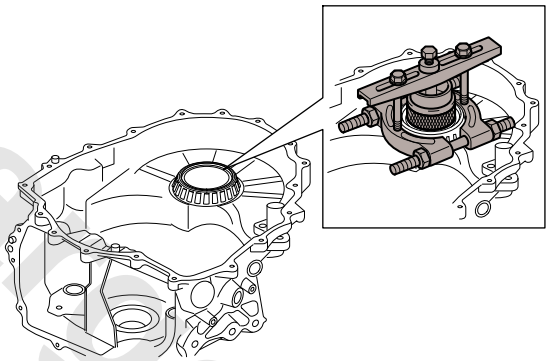

S1213134

30. Remove the 345R output shaft bearing outer race from the transmission housing with the special **TPT00183** tool, and remove 345R output shaft oil nozzle.

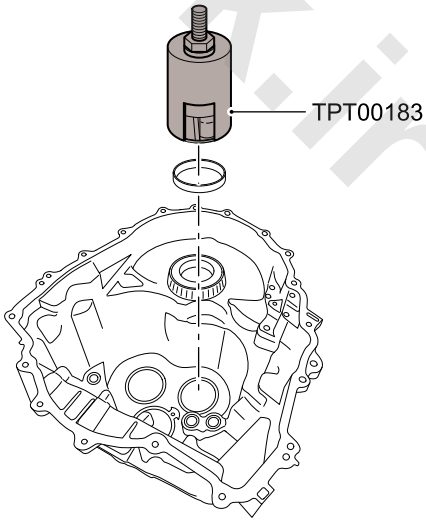

S1213135

31. Remove the input shaft oil nozzle from the transmission housing.

www.cargeek.ir

www.cargeek.ir

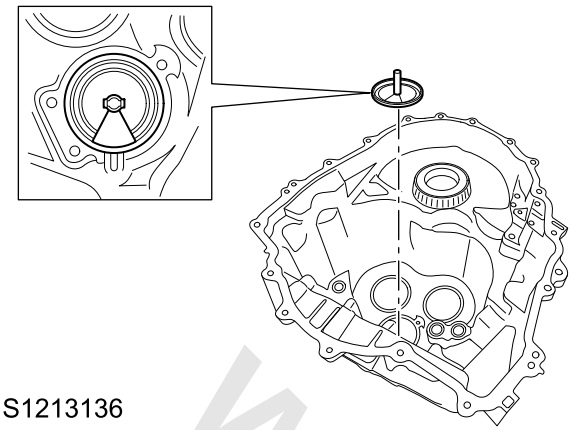

S1213136

32. Remove the 1267 output shaft bearing outer race from the transmission housing with the special tool **TPT00184** (left), and remove 1267 output shaft oil nozzle.

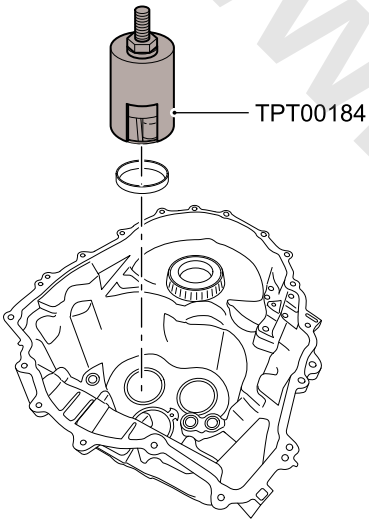

S1213137

33. Remove 1 bolt fixing the clutch housing side oil groove to the clutch housing, and remove the clutch housing side oil groove.

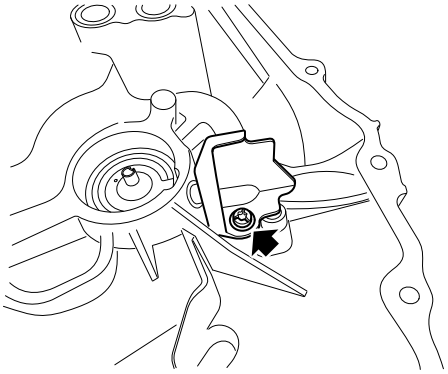

S1213139

34. Remove the 345R output shaft bearing outer race from the clutch housing with the special **TPT00183** tool, and remove 345R output shaft oil nozzle.

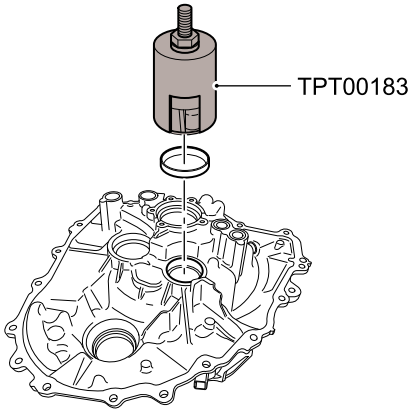

S1213140

35. Remove the 1267 output shaft bearing outer race from the clutch housing with the special tool **TPT00185**, and remove 1267 output shaft oil nozzle.

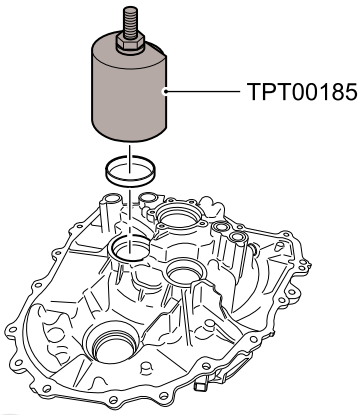

S1213141

36. Remove the differential front bearing outer race from the clutch housing with the special tool **TPT00187** (2WD) or **TPT00224** (AWD).

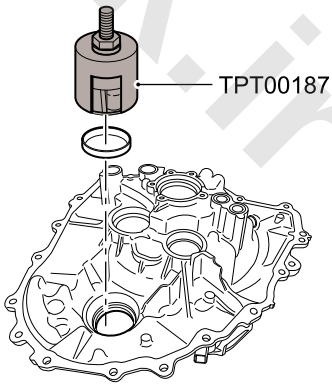

S1213142

www.cargeek.ir

www.cargeek.ir

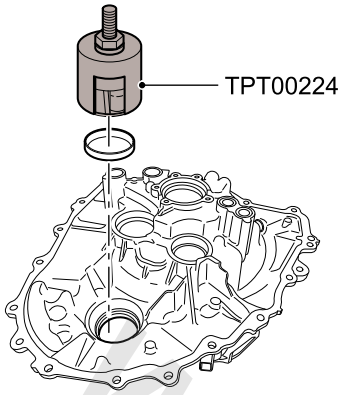

S1213182

Refit

1. Clean the transmission housing and clutch housing, and ensure that there is no foreign material.
2. Fit 1/2/6/7 gear intermediate shaft oil nozzle to the transmission housing with the special tools **TPT00198**, **TPT00192**.

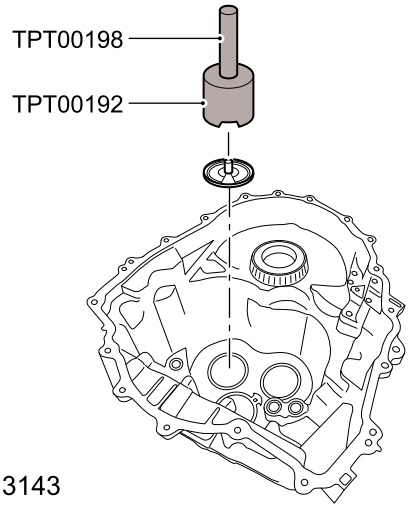

S1213143

3. Fit 1/2/6/7 gear main shaft bearing outer race to the transmission housing with the special tools **TPT00198**, **TPT00180**.

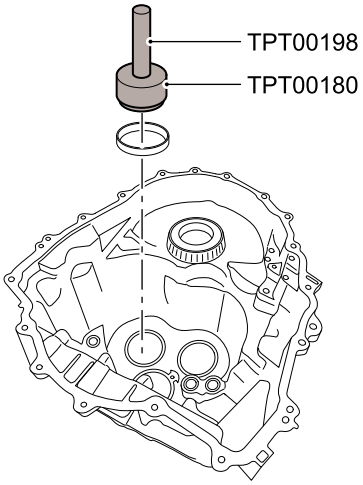

S1213144

4. Fit the input shaft oil nozzle to the transmission housing with the special tools **TPT00198**, **TPT00191**.

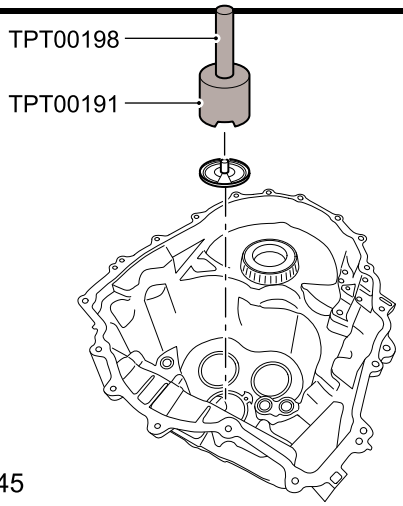

S1213145

5. Fit 3/4/5/R gear intermediate shaft oil nozzle to the transmission housing with the special tools **TPT00198**, **TPT00190**.

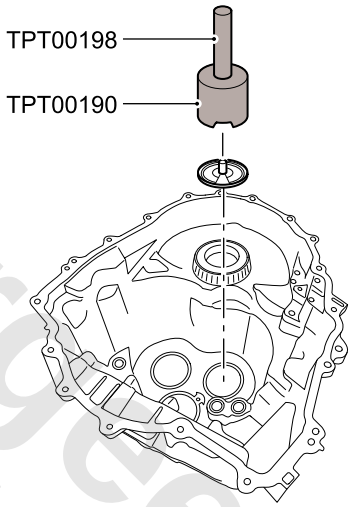

S1213146

6. Fit 3/4/5/R gear main shaft bearing outer race to the transmission housing with the special tools **TPT00198**, **TPT00179**.

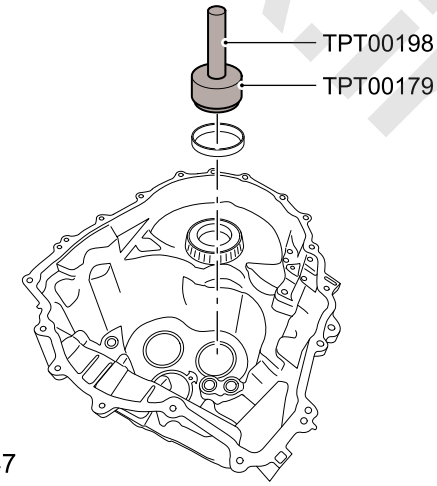

S1213147

7. Fit the transmission left cone bearing to the transmission housing with the special tools **TPT00198**, **TPT00178**.

www.cargeek.ir

www.cargeek.ir

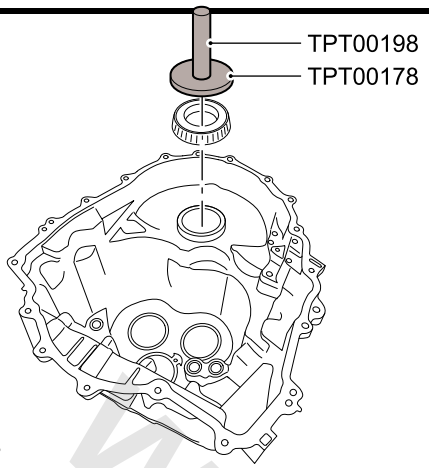

S1213148

8. Fix 1267 output shaft oil guide groove and input shaft oil guide groove to the transmission housing, fit 2 bolts, tighten them to **7.5–10.5Nm**, and check the torque.
9. Fit the shift shaft position switch to the transmission housing, and fit the shift shaft stop pin.
10. Fix the shift shaft and shifting fork to the special tool **TPT00165**.
11. Fit the transmission housing into the shift shaft and shifting fork, fit it in place by corresponding to relevant position, and fix the special tool **TPT00165** to the transmission housing by 3 bolts.

Caution: *Before fitting the transmission housing, please adjust the position of rear ball bearing cover plate of input shaft to align the threaded hole in the rear ball bearing cover plate of input shaft with the threaded hole in the transmission housing.*

12. Fit the special tool **TPT00188**.
13. Fit 3 bolts of the rear ball bearing cover plate of input shaft to the transmission housing, tighten the torque to **7.5–10.5Nm**, and check the torque.
14. With the special tool **TPT00165** as the handle, fit the special tool **TPT00188** to the work bench together with the transmission.
15. Remove the special tool **TPT00165**.
16. Fix the automatic transmission output shaft sensor to the transmission housing, fit 1 bolt, tighten to **7.5–10.5Nm** and check the torque.
17. Fix the parking actuator support to the transmission housing, fit 1 bolt, tighten to **7.5–10.5Nm**, and check the torque.
18. Fit 2 parking lever pins and conduit.
19. Fit the parking lever, and fit the pawl shaft, pawl and reset spring.
20. Fix the parking pawl support assembly to the transmission housing, fit 2 bolts, tighten them to **7.5–10.5Nm**, and check the torque.
21. Fit the transmission internal harness assembly to the parking pawl support assembly, and connect it to the connector.
22. Fix the shift retaining spring to the transmission housing, fit 1 bolt, tighten it to **7.5–10.5Nm**, and check the torque.
23. Fit the differential assembly.
24. Arrange the main shaft bearing outer race removed from the clutch housing onto 3/4/5/R gear main bearing, 1/2/6/7 gear main bearing and differential main bearing respectively.
25. Arrange the main bearing clearance measuring tool of the special tool TPT00205 onto the main shaft bearing outer race.
26. Uniformly fix the clutch housing and liner to the transmission housing through 6 guide pins and bolts of the special tool TPT00205, and tighten to **35–40Nm**.
27. Measure the values within the clearance with a clearance gauge at interval of 180°, calculate the average, and select the suitable size of gasket based on the value.

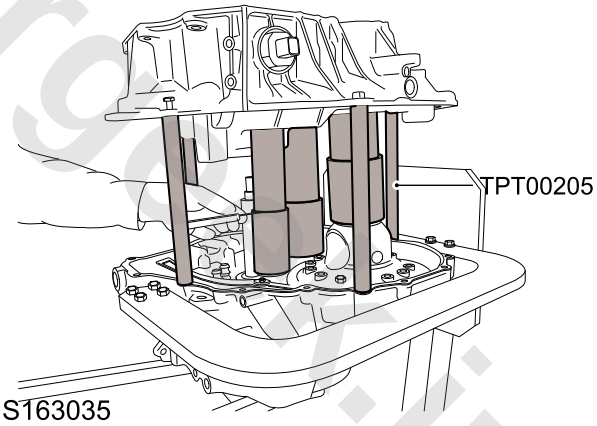

S163035

28. Fit the differential main bearing outer race and gasket to the clutch housing with the special tools **TPT00198**, **TPT00182** (2WD) or **TPT00223** (AWD).

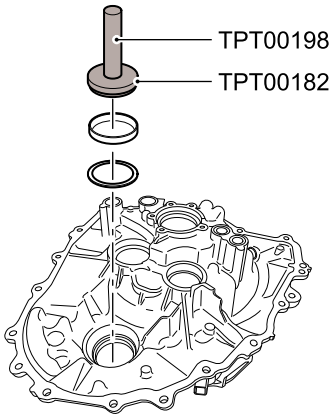

S1213150

www.cargeek.ir

www.cargeek.ir

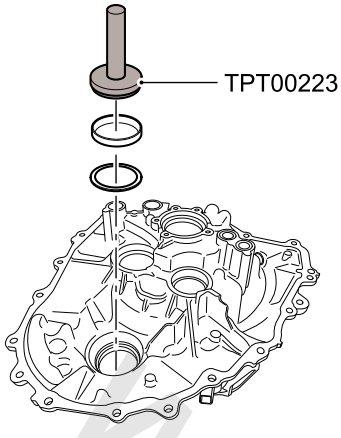

S1213183

29. Fit 1/2/6/7 gear intermediate shaft oil nozzle to the clutch housing with the special tools **TPT00198**, **TPT00191**.

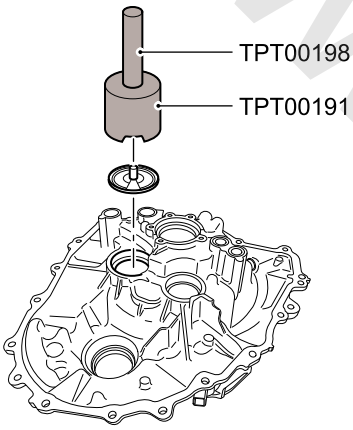

S1213151

30. Fit 1/2/6/7 gear main bearing outer race to the clutch housing with the special tools **TPT00198**, **TPT00181**.

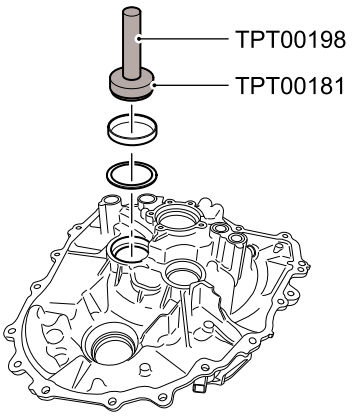

S1213152

31. Fit 3/4/5/R gear intermediate shaft oil nozzle to the clutch housing with the special tools **TPT00198**, **TPT00190**.

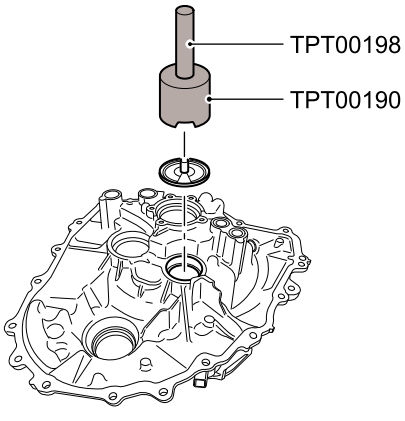

S1213153

32. Fit 3/4/5/R gear main bearing outer race to the clutch housing with the special tools **TPT00198**, **TPT00179**.

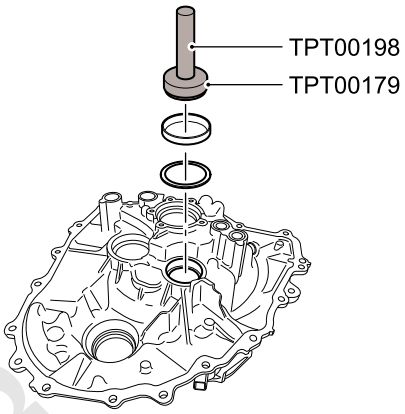

S1213155

33. Fix the clutch housing side oil groove to the clutch housing, fit 1 bolt, tighten to **7.5–10.5Nm**, and check the torque.
34. Fit the special tool **TPT00201** to the transmission housing.

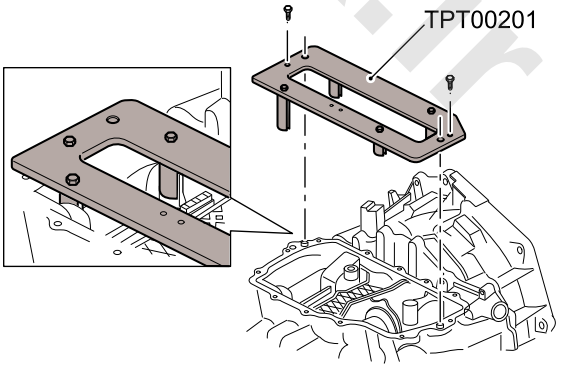

S1213156

35. Fit the magnetic steel to a relevant position on the transmission housing.
36. Fit a new gasket, fix the clutch housing to the transmission housing, fit 18 bolts, tighten to **35–40Nm**, and check the torque.
37. Fix the front ball bearing cover plate of input shaft

www.cargeek.ir

www.cargeek.ir

to the clutch housing, fit 5 new bolts, tighten to **7.5–10.5Nm**, and check the torque.

Caution: *Before fitting the clutch housing, please adjust the position of front ball bearing cover plate of input shaft to align the threaded hole in the front ball bearing cover plate of input shaft with the threaded hole in the clutch housing.*

38. Fit the clutch actuator cylinder assembly.

Clutch Actuator Cylinder Assembly Refit

39. Fit the transmission electro-hydraulic control assembly.

Transmission Electro-Hydraulic Control Assembly Refit

40. Fit the dry dual clutch automatic transmission assembly.

Dry Dual Clutch Automatic Transmission Assembly Refit

246R Input Shaft Oil Seal

Remove

1. Remove the dry dual clutch automatic transmission assembly.

Dry Dual Clutch Automatic Transmission Assembly Remove

2. Remove the clutch retainer ring, and remove the direct gear clutch hub.

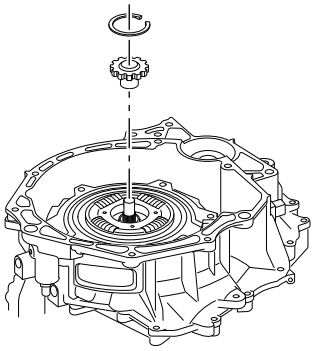

S1213109

3. Remove 246R input shaft oil seal with the tool of the **TPT00166**, and discard it.

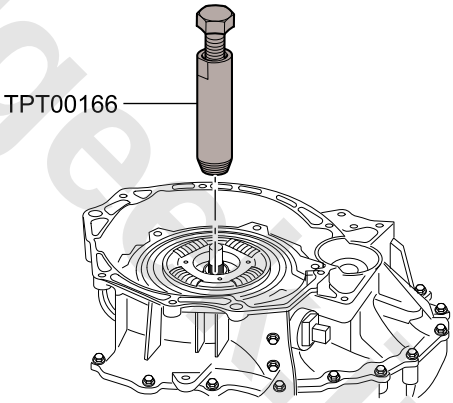

S1213115

Refit

1. Fit the steering tool of the special tool **TPT00166** to 1357 input shaft.
2. Fit a new 246R input shaft oil seal to 246R input shaft through the steering tool with the installer of the special tool **TPT00166**.

www.cargeek.ir

www.cargeek.ir

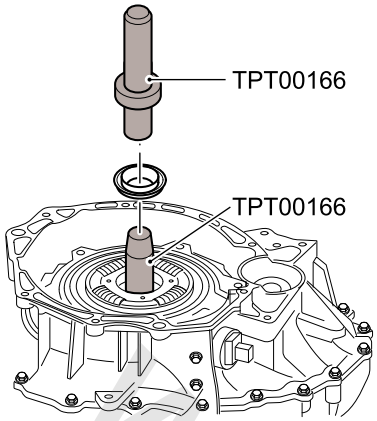

S1213161

3. Remove residual grease on the direct gear clutch hub spline, apply a thin layer of new grease, and fit the direct gear clutch hub to the clutch assembly.
4. Fit the clutch retainer ring.
5. Fit the dry dual clutch automatic transmission assembly.

Dry Dual Clutch Automatic Transmission Assembly Refit

Input Shaft Assembly Disassembly

Remove

1. Disassemble the dual clutch automatic transmission.

Dual Clutch Automatic Transmission Disassembly

2. Remove 246R input shaft assembly from 1357 input shaft assembly.

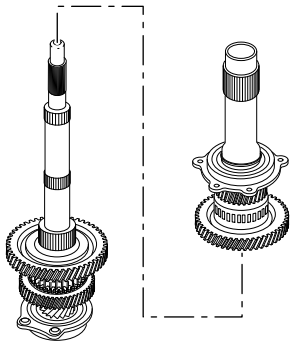

S1213157

3. Remove the needle bearing from 1357 input shaft assembly.
4. Fix 1357 input shaft assembly to the bench clamp, and remove the bolt on the input shaft.
5. Remove 1357 input shaft bearing with the bearing extractor.

S1213158

6. Remove the snap ring, and remove 246R input shaft bearing with the bearing extractor.

www.cargeek.ir

www.cargeek.ir

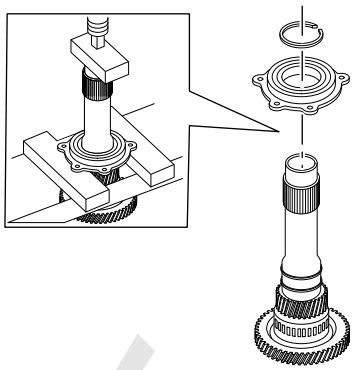

S1213159

Refit

1. Fit 246R input shaft front ball bearing cover plate to 246R input shaft with the special tool **TPT00170**, and fit the snap spring.

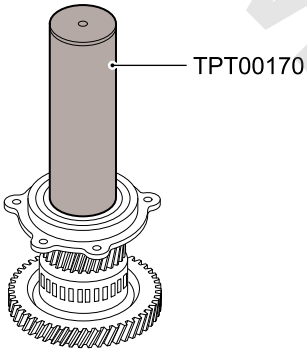

S1213160

2. Fix 1357 input shaft assembly to the bench clamp, and fit 1357 input shaft rear ball bearing cover plate to 1357 input shaft assembly with the special tool **TPT00171**.
3. Fit 1 bolt, tighten to **40–50Nm**, check the torque, and remove 1357 input shaft assembly.
4. Fit 3 needle bearings on 1357 input shaft.
5. Fit 246R input shaft assembly to 1357 input shaft assembly.
6. Assemble the dual clutch automatic transmission.

Dual Clutch Automatic Transmission Assembly

1267 Output Shaft Assembly

Remove

1. Disassemble the dual clutch automatic transmission.

Dual Clutch Automatic Transmission Disassembly

2. Remove 1267 output shaft bearing with the bearing extractor.

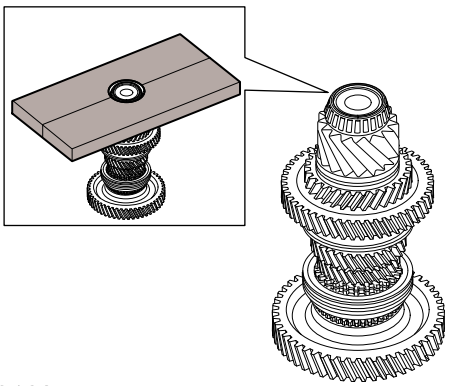

S1213162

Refit

1. Fit 1267 output shaft bearing to 1267 output shaft assembly with the special tool **TPT00171**.

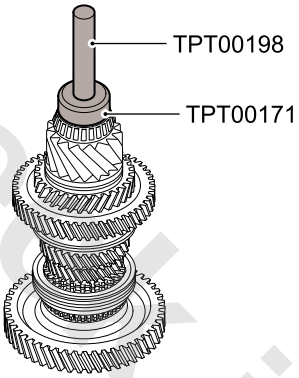

S1213164

2. Assemble the dual clutch automatic transmission.

Dual Clutch Automatic Transmission Assembly

www.cargeek.ir

www.cargeek.ir

345R Output Shaft Assembly

Remove

1. Disassemble the dual clutch automatic transmission.

Dual Clutch Automatic Transmission Disassembly

2. Remove 345R output shaft bearing with the bearing extractor.

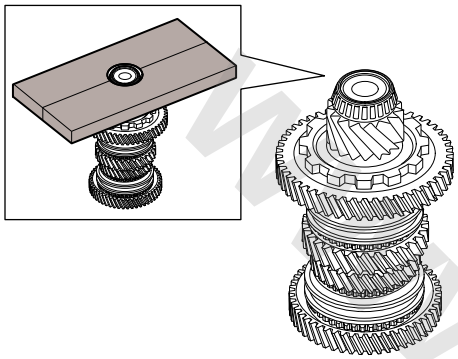

S1213163

Refit

1. Fit 345R output shaft bearing to 345R output shaft assembly with the special tool **TPT00173**.

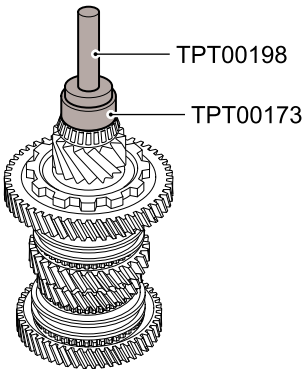

S1213165

2. Assemble the dual clutch automatic transmission.

Dual Clutch Automatic Transmission Assembly

Differential Assembly

Remove

1. Disassemble the dual clutch automatic transmission.

Dual Clutch Automatic Transmission Disassembly

2. Remove differential right bearing with the bearing extractor.

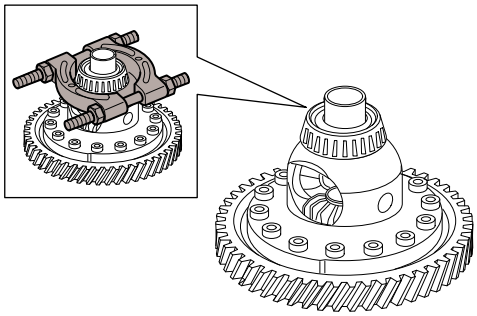

S1213166

3. Remove the differential left bearing outer race with the special tool **TPT00186**.

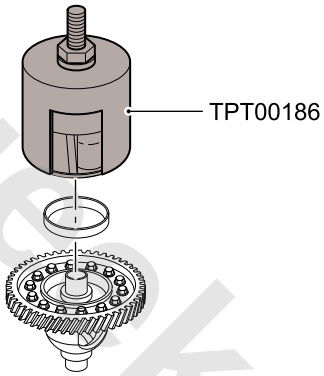

S1213167

Refit

1. Fit the differential left bearing outer race to the differential with the special tool **TPT00175**.

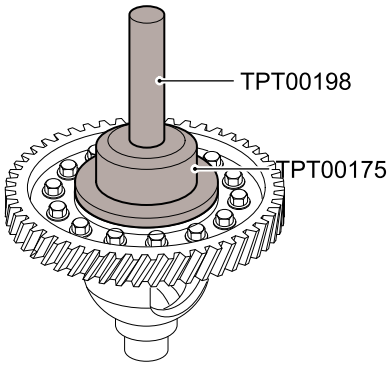

S1213168

2. Fit the differential right bearing to the differential with the special tool **TPT00176** (2WD) or **TPT00222**

www.cargeek.ir

www.cargeek.ir

(AWD).

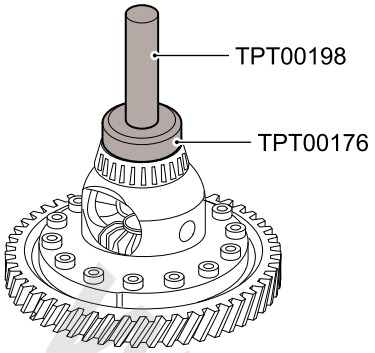

S1213169

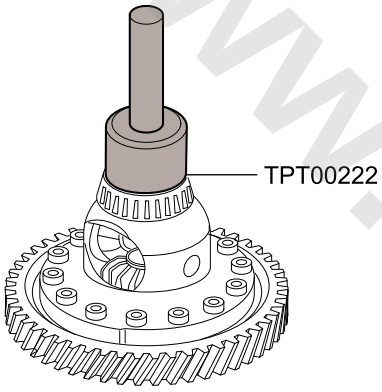

S1213184

3. Assemble the dual clutch automatic transmission.

☞Dual Clutch Automatic Transmission Assembly

www.cargeek.ir

Transmission Failure Diagnosis

Transmission Symptom Diagnosis

Note: Symptom table is used under the following conditions:

1. The scan tool can connect TCM normally;
2. No DTC of TCM is detected;
3. Be familiar with the structure, principle and working mode of the dry dual clutch automatic transmission. For more information, please refer to "Description and Operation".
   ☞**Description and Operation**

Appearance/Physical Inspection

Check the accessible or visible system components for any obvious damages or failures which may lead to such symptom.

Intermittent failure

Electrical connection or harness failure may lead to intermittent failure.

Symptom List

When diagnosing symptom, please refer to the following symptom diagnosis program:

- Fluid diagnosis
  1. Dry dual clutch automatic transmission fluid check
     ☞**Dry dual clutch automatic transmission fluid check**
  2. Fluid leakage diagnosis
- Noise and vibration diagnosis
  1. Low-speed vibration
  2. Steering noise
  3. Dull metallic sound during acceleration and deceleration
  4. "Click" during steering
  5. Noise in neutral gear when the engine runs
  6. Noise in gear 1 only
  7. Noise in gear 2 only
  8. Noise in gear 3 only
  9. Noise in gear 4 only
  10. Noise in gear 5 only
  11. Noise in gear 6 only
  12. Noise in gear 7 only
  13. Noise in R gear only
  14. Noise in gear 4 and 6
  15. Noise in gear 5 and 7
  16. Noise in all gears
- Shift quality diagnosis
  1. Gear slide
  2. Gear slide during acceleration
  3. Gear slide during gliding
- No symptom found or detected
  1. Dry dual clutch automatic transmission fluid check
     ☞**Dry dual clutch automatic transmission fluid check**
  2. Road Test

Road Test

Note: Road test is conducted only as a part of symptom diagnosis.

Perform the road test and symptom diagnosis cooperatively. Refer to "Symptom List".

The following test provides the method to test automatic transmission state. The test can realize most driving conditions. The test is divided into the following several parts:

1. Electrical function test
2. Up-shift control and dual clutch engagement state
3. Some down-shift actions when the accelerator is depressed
4. Manual Downshift
5. Downshift by coasting
6. Manual shift range selection
   a. R Gear
   b. Driver shift control

Note: Complete the test in the order as shown. If the test is not completed, correct assessment can not be made.

Before the road test, each of the following items shall be ensured:

1. Engine is running normally
2. Transmission fluid level is OK
   ☞**Dry dual clutch automatic transmission fluid check**
3. Tire pressure normal

During road test:

1. Conduct road test when road conditions allow
2. Run the vehicle under controllable safety condition
3. Comply with all traffic rules
4. Check the scan tool parameter when conducting the test
5. Pay attention to the abnormal sound or smell
6. The minimum transmission fluid temperature shall be 90°C.

Upon the road test, check the following items:

1. Check if the transmission fluid level is proper.

www.cargeek.ir

☞ **Dry dual clutch automatic transmission fluid check**

2. Check for DTC generated during the road test. Refer to DTC troubleshooting manual for details.
3. Check the scan tool for abnormal reading or parameter.
4. Check for fluid leakage. Please refer to "Fluid Leakage Diagnosis".

Electrical function test

Conduct the procedure, make sure if the electronic components of transmission can perform normally. If such component is not checked, simple electrical failure will also be diagnosed incorrectly.

1. Connect the scan tool VDS;
2. Place the shift lever in P gear, and enable electronic parking system;
3. Start the Engine;
4. Make sure the real-time display parameter can be obtained through VDS and can be displayed normally, and pay attention to the suspicious parameters:
   a. Engine speed
   b. Odd Clutch Slipping Friction
   c. Even Clutch Slipping Friction
   d. Speed (in ABS Controller)
   e. Internal mode switch mode "A\B\C\P\S" position sensor state
   f. Transmission target gear
   g. General transmit speed ratio of transmission
   h. Brake pedal switch
   i. Engine coolant temperature
   j. transmission fluid temperature
   k. Ignition Voltage
5. Check the garage shift operation
   a. Depress the brake pedal, and enable electronic parking system;
   b. Shift the gear in the following order: P® R® N® D® R® D, and stop for 2 to 3s in each gear.
   c. Check if the gear engages quickly (if the transmission fluid temperature is higher than 20℃, the transmission does not run sharply, and the gear engagement time is less than 2s.) Note: Gear engagement is almost invisible in some cases.

   The sharp gear engagement may be caused by the following reasons:
   a. High engine idle speed - compare the actual engine idle speed and target idle speed;
   b. Some failure caused by DTCs leads to maximum pipe pressure, and it prevent the clutch from sliding.
   c. Unfinished or incorrect quick self-learning - perform quick self-learning operation again, and observe if the shift quality improves. If it does not improve, refer to "Unsmooth Garage Shift"

   Shift delay may be caused by the following reasons:
   a. Low engine idle speed - compare the actual engine idle speed and target idle speed;
   b. Transmission fluid level too low;
   c. Transmission fluid temperature too low - read the in-time display parameter "transmission fluid Temperature" with VDS;
   d. Gear shift mechanism - if necessary, check and adjust gear shift mechanism and cable;
   ☞ **Gear Cable – DCT 250 – Refit**
   e. Unfinished or incorrect quick self-learning - perform quick self-learning operation again, and observe if the shift delay improves. If it does not improve, refer to "1\R Gear Unsmooth Shift"
6. Check the gear information in the in-time display parameters from VDS.
   a. Depress the brake pedal, and enable electronic parking system;
   b. Shift the gear in the following order: P® R® N® D® R® D, and stop for 2 to 3s in each gear.
   c. Stop the gear shift lever in "P" gear;
   d. Make sure the selected gear is same as the gear displayed on the scan tool.
7. Check the throttle position input information.
   a. Depress the brake pedal, and enable electronic parking system;
   b. Make sure the gear shift lever is in "P" gear;
   c. Depress or release the accelerator pedal to increase or decrease the engine speed, observe the "Throttle Position" parameter on the real-time display of the scan tool VDS, and the value (percentage) shall increase or decrease with the engine speed.

   If any one of the above tests is abnormal, after the road test, record the relevant test result for reference.

Upshift Control

TCM calculates the up-shift point based on two inputs: throttle position and speed. When TCM makes sure that the shift conditions are met, TCM controls the clutch action and shift

www.cargeek.ir

www.cargeek.ir

fork position by transferring the current to the corresponding solenoid valve, so as to realize gear shift process.

Operate the following steps:

1. Check the following real-time parameters on the scan tool:
   a. Engine speed
   b. Speed
   c. Odd Clutch Slip
   d. Even Clutch Slip
   e. Transmission target gear
   f. Internal mode switch mode "A\B\C\P\S" position sensor state
   g. Brake pedal switch
   h. Engine coolant temperature
   i. Transmission fluid temperature
2. Shift the shift lever to D gear.
3. Depress the accelerator pedal to 15–20% and hold, so as to accelerate the vehicle. Keep the accelerator pedal position steady.
4. Pay attention to any unsmooth, weak or slip shift, and any noise or vibration.

Shift down when accelerator is depressed

1. Shift the shift lever to D gear;
2. Accelerate the vehicle by depressing the accelerator pedal (5–15%) slightly, until it is shifted to gear 3.
3. Depress the accelerator pedal quickly until the target gear is displayed as gear 2.
4. Make sure the transmission can shift down within 2s when the accelerator pedal acts;
5. Repeat steps 2-4 when the speed is high, shift up to gear 4, depress the accelerator pedal and then shift down to gear 3.
6. Repeat steps 2-4 when the speed is high, shift up to gear 5, depress the accelerator pedal and then shift down to gear 4.
7. Repeat steps 2-4 when the speed is high, shift up to gear 6, depress the accelerator pedal and then shift down to gear 5.
8. Repeat steps 2-4 when the speed is high, shift up to gear 7, depress the accelerator pedal and then shift down to gear 6.
9. Pay attention to any unsmooth shift, weak or skid phenomena, and any noise or vibration.

Manual Downshift

Manual downshift test is not required. The vehicle is provided with driver shift control system, and TCM can control the transmission down-shift automatically to prevent transmission damage.

Downshift by coasting

1. Place the shift lever in P gear;
2. Accelerate the vehicle to gear 7;
3. Release accelerator pedal and depress the brake pedal;
4. Monitor the real-time "General transmit speed ratio of transmission" parameter on the scan tool, the parameter will change after the "Target gear" changes, and make sure the downshift is normal.

Manual shift range selection

R Gear

Perform the following test:

1. Park the vehicle, and place the shift lever in R gear;
2. Accelerate the vehicle slowly, and keep the accelerator pedal in 10%-15%;
3. Make sure if there is obvious skid, noise or vibration.

Driver shift control

For the specific description related to driver shift control, refer to User Manual. The driver shift control is used to enable the transmission to make right response to the driver's instruction. When the engine speed reaches to the maximum, TCM can shift up automatically, and prevent any downshift operation which can lead to high engine speed.

www.cargeek.ir

www.cargeek.ir

Fluid leakage diagnosis

Symptom	Possible causes	Correction
Fluid leakage	High fluid level	Drain extra fluid
	Axle shaft oil seal damaged	Check the axle shaft oil seal, and replace when necessary.
	Transmission vent plug blocked	Check the vent plug and replace it when necessary.
	The junction surface between the transmission housing and clutch housing is poorly sealed or loose.	Check the gasket between the transmission housing and clutch housing, and replace it when necessary.

Low-speed vibration

Symptom	Possible causes	Correction
Low-speed vibration	Drive shaft joint worn	Check the drive shaft joint, and replace it when necessary.
	Differential gear worn	Check the differential assembly, and replace the differential assembly when necessary.

Steering noise

Symptom	Possible causes	Correction
Steering noise	Wheel bearing worn	Check the front wheel bearing, and replace it when necessary.
	Differential gear worn	Check the differential gear, and replace the differential assembly when necessary.

Dull metallic sound during the acceleration and deceleration

Symptom	Possible causes	Correction
Dull metallic sound during the acceleration and deceleration	Engine bracket loose	Check the engine bracket, and tighten it when necessary.
	Drive shaft joint spline worn	Check the inside drive shaft joint, and replace it when necessary.
	Differential side gear shaft spline worn	Check the differential side gear shaft, and replace the differential assembly when necessary.

"Click" during steering

Symptom	Possible causes	Correction
"Click" during steering	Drive shaft outer ball joint worn	Check the drive shaft ball joint, and replace it when necessary.

Noise in neutral gear when the engine runs

Symptom	Possible causes	Correction
Noise in neutral gear when the engine runs	The bolt from double mass flywheel (DMF) to the clutch loose	Check the tangent torque of the bolt from double mass flywheel to the clutch
	Double mass flywheel (DMF) center bearing worn	Check the bearing, and replace it when necessary.

Noise in gear 1 only

Symptom	Possible causes	Correction
Noise in gear 1 only	The constant mesh gear in gear 1 worn, and with gap and scratch	Check the gear, and replace it when necessary.
	1st/7th gear synchronizer worn, and with gap and scratch	Check the gear synchronizer, and replace 1267 output shaft assembly when necessary.

www.cargeek.ir

www.cargeek.ir

Noise in gear 2 only

Symptom	Possible causes	Correction
Noise in gear 2 only	The constant mesh gear in gear 2 worn, and with gap and scratch	Check the gear, and replace it when necessary.
	2nd/6th gear synchronizer worn, and with gap and scratch	Check the gear synchronizer, and replace 1267 output shaft assembly when necessary.

Noise in gear 3 only

Symptom	Possible causes	Correction
Noise in gear 3 only	The constant mesh gear in gear 3 worn, and with gap and scratch	Check the gear, and replace it when necessary.
	3rd/5th gear synchronizer worn, and with gap and scratch	Check the gear synchronizer, and replace 345R output shaft assembly when necessary.

Noise in gear 4 only

Symptom	Possible causes	Correction
Noise in gear 4 only	The constant mesh gear in gear 4 worn, and with gap and scratch	Check the gear, and replace it when necessary.
	4th/R gear synchronizer worn, and with gap and scratch	Check the gear synchronizer, and replace 345R output shaft assembly when necessary.

Noise in gear 5 only

Symptom	Possible causes	Correction
Noise in gear 5 only	The constant mesh gear in gear 5 worn, and with gap and scratch	Check the gear, and replace it when necessary.
	3rd/5th gear synchronizer worn, and with gap and scratch	Check the gear synchronizer, and replace 345R output shaft assembly when necessary.

Noise in gear 6 only

Symptom	Possible causes	Correction
Noise in gear 6 only	The constant mesh gear in gear 6 worn, and with gap and scratch	Check the gear, and replace it when necessary.
	2nd/6th gear synchronizer worn, and with gap and scratch	Check the gear synchronizer, and replace 1267 output shaft assembly when necessary.

Noise in gear 7 only

Symptom	Possible causes	Correction
Noise in gear 7 only	The constant mesh gear in gear 7 worn, and with gap and scratch	Check the gear, and replace it when necessary.
	1st/7th gear synchronizer worn, and with gap and scratch	Check the gear synchronizer, and replace 1267 output shaft assembly when necessary.

Noise in R gear only

Symptom	Possible causes	Correction
Noise in R gear only	The constant mesh gear in R gear worn, and with gap and scratch	Check the gear, and replace 1267 output shaft assembly or 345R output shaft assembly when necessary.
	4th/R gear synchronizer worn, and with gap and scratch	Check the gear synchronizer, and replace 345R output shaft assembly when necessary.

Noise in gear 4 and gear 6

Symptom	Possible causes	Correction
Noise in gear 4 and gear 6	Input shaft gear worn or damaged	Check if the gear and bearing of the even input shaft is damaged, and replace them if necessary.

www.cargeek.ir

www.cargeek.ir

Noise in gear 5 and 7

Symptom	Possible causes	Correction
Noise in gear 5 and 7	Input shaft gear worn or damaged	Check is the gear and bearing of odd input shaft is damaged, and replace them if necessary.

Noise in all gears

Symptom	Possible causes	Correction
Noise in all gears	Low fluid level	Add appropriate fluid.
	Wheel bearing worn or damaged	Check the wheel bearing, and replace it when necessary.
	Shift sliding rail guide bearing loose	Check the shift sliding rail guide bearing.
	1st/2nd/3rd/4th/5th/6th/7th/R gear worn, and with gap and scratch	Check the components, and replace the components if necessary.
	Differential assembly is worn, and with gap and scratch.	Check the differential assembly, and replace the differential assembly when necessary.
	Taper ball bearing is worn or scratched.	Check if the ball bearing is scratched or dent is found, and replace it when necessary.

Gear slide

Symptom	Possible causes	Correction
Gear slide	Transmission suspension loose	Tighten or replace the transmission suspension.
	Worn or bent shifting fork	Check the shifting fork, and replace it when necessary.
	Transmission internal gear shift mechanism failure	Disassemble the transmission, and repair it when necessary.

Gear slide during acceleration

Symptom	Possible causes	Correction
Gear slide during acceleration	Gear 1 spline lock on 1st/7th gear synchronizer canine tooth worn or damaged	Check the spline lock, and replace it if necessary.
	Gear 7 spline lock on 1st/7th gear synchronizer canine tooth worn or damaged	Check the spline lock, and replace it if necessary.
	Gear 2 spline lock on 2nd/6th gear synchronizer canine tooth worn or damaged	Check the spline lock, and replace it if necessary.
	Gear 6 spline lock on 2nd/6th gear synchronizer canine tooth worn or damaged	Check the spline lock, and replace it if necessary.
	Gear 3 spline lock on 3rd/5th gear synchronizer canine tooth worn or damaged	Check the spline lock, and replace it if necessary.
	Gear 5 spline lock on 3rd/5th gear synchronizer canine tooth worn or damaged	Check the spline lock, and replace it if necessary.
	Gear 4 spline lock on 4th/R gear synchronizer canine tooth worn or damaged	Check the spline lock, and replace it if necessary.
	Gear R spline lock on 4th/R gear synchronizer canine tooth worn or damaged	Check the spline lock, and replace it if necessary.
	1st/2nd/3rd/4th/5th/6th/7th/R gear spline lock worn or damaged	Check the spline lock, and replace it if necessary.

www.cargeek.ir

www.cargeek.ir

	Transmission internal gear shift mechanism failure	Disassemble the transmission, and repair it when necessary.

Gear slide during gliding

Symptom	Possible causes	Correction
Gear slide during gliding	Fork sliding rail worn, damaged or missing	Check the fork sliding rail, and replace it when necessary.
	Transmission internal gear shift mechanism failure	Remove the transmission, and repair it when necessary.

Unsmooth Garage Shift

Symptom	Possible causes	Correction
Unsmooth Garage Shift	Clutch position sensor (CPS) reading abnormal	Replace clutch actuator cylinder assembly
	246R even input shaft idle speed greater than 250RPM 1. Clutch middle plate bearing drags, and hot clutch may lead to such condition. 2. The even clutch driven plate deforms because of overheating, and it leads to drag	Check the dual clutch assembly, and replace it when necessary
	1357 odd input shaft idle speed greater than 250RPM 1. Double mass flywheel needle bearing drags, and such condition may occur after the bearing damage. 2. The odd clutch driven plate deforms because of overheating, and it leads to drag	Check the 1357 odd input shaft, double mass flywheel, dual clutch assembly, and replace them when necessary

www.cargeek.ir

www.cargeek.ir

Special Tools

Tool Number	Description	Picture
TPT00059	Transmission fluid fill equipment	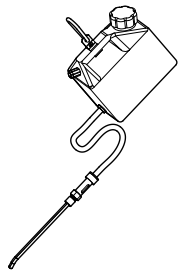 TPT00059
T10007	Engine lift bracket	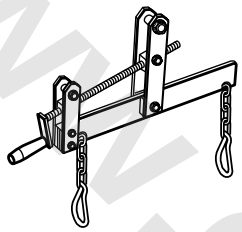 T10007
TEN00070	Engine support	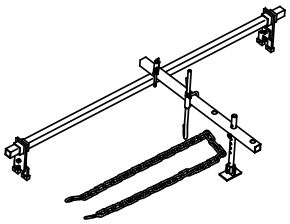 TEN00070
TPT00202	Powerpack Holding Fixture	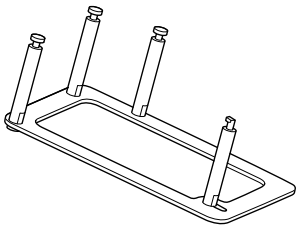 TPT00202
TPT00203	Powerpack Installing Guided Pins	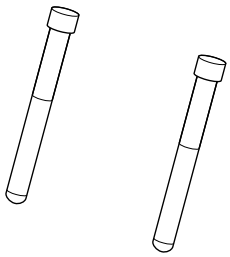 TPT00203

Tool Number	Description	Picture
TPT00200	Powerpack Actuator Piston Neutral Gauge	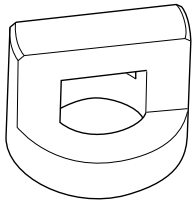 TPT00200
TPT00199	Dual Clutch Assembly Remover/Installer	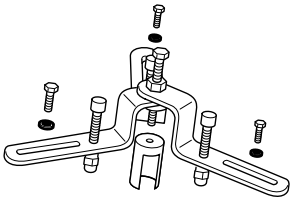 TPT00199
TPT00167	Manual Shift Shaft Seal Remover/Installer	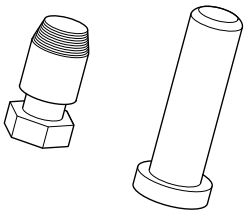 TPT00167
TPT00195	Clutch Housing Seal Remover	TPT00195
TPT00168	Clutch Housing Seal Installer	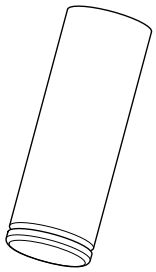 TPT00168

www.cargeek.ir

www.cargeek.ir

Tool Number	Description	Picture
TPT00198	Oil Seal Installer Handlebar	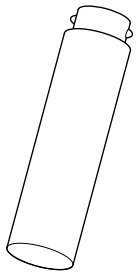 TPT00198
TPT00169	Driving Shaft Seal Installer	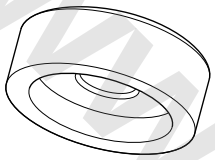 TPT00169
TPT00225	Pressure cap test tool	TPT00225
TPT00204	Driving Shaft Seal Installer-PTU side-AWD	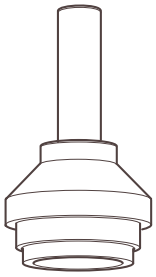 TPT00204
TPT00188	Transmission Holding Fixture	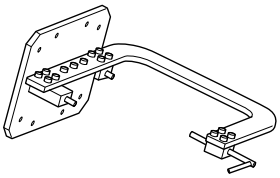 TPT00188

Tool Number	Description	Picture
TPT00165	Transmission Gearset Assembly Fixture	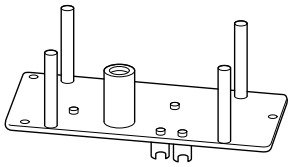 TPT00165
TPT00189	Manual Shift Shaft Fixing Pin Remover/Installer	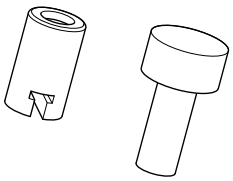 TPT00189
TPT00183	345R Output Shaft Bearing Cup Remover	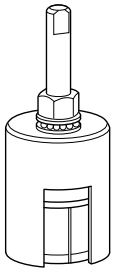 TPT00183
TPT00184	1267 Output Shaft left Bearing Cup Remover	TPT00184
TPT00185	1267 Output Shaft Right Bearing Cup Remover	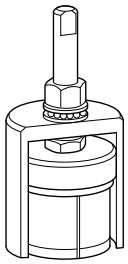 TPT00185

www.cargeek.ir

Tool Number	Description	Picture
TPT00187	Right Differential Bearing Cup Remover	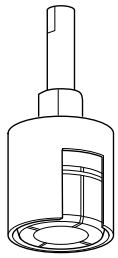 TPT00187
TPT00224	Right Differential Bearing Cup Remover-AWD	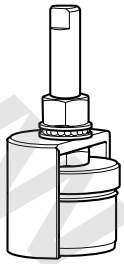 TPT00224
TPT00192	1267 Output Shaft Transmission Case Side Oil Dam Installer	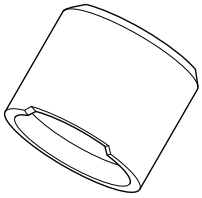 TPT00192
TPT00180	1267 Output Shaft Left Bearing Cup Installer	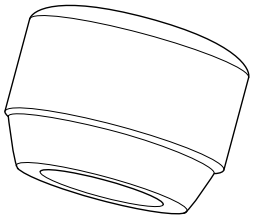 TPT00180
TPT00191	1267 Output Shaft Clutch Housing Side Oil Dam and Input Shaft Oil Dam Installer	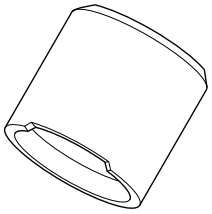 TPT00191

Tool Number	Description	Picture
TPT00190	345R Output Shaft Oil Dam Installer	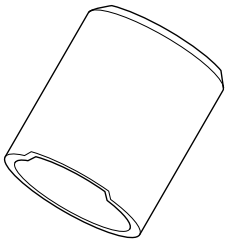 TPT00190
TPT00179	345R Output Shaft Bearing Cup Installer	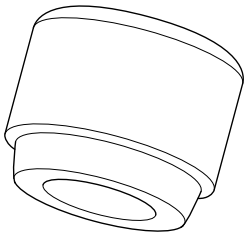 TPT00179
TPT00178	Left Differential Bearing Installer	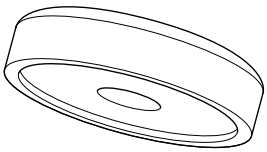 TPT00178
TPT00182	Right Differential Bearing Cup Installer	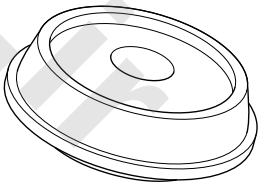 TPT00182
TPT00223	Right Differential Bearing Cup Installer-AWD	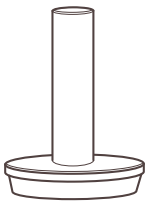 TPT00223

www.cargeek.ir

Tool Number	Description	Picture
TPT00181	1267 Output Shaft Right Bearing Cup Installer	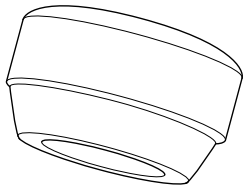 TPT00181
TPT00201	Shift Fork Neutral Alignment Plate	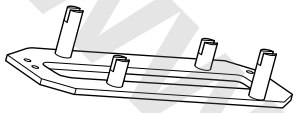 TPT00201
TPT00166	Even Input Shaft Seal Remover/Installer	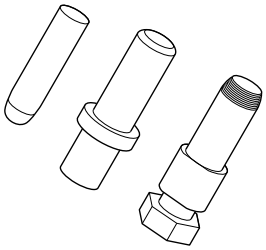 TPT00166
TPT00170	Even Input Shaft Right Retainer Installer	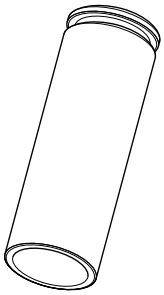 TPT00170
TPT00171	Odd Input Shaft Left Retainer and 1267 Output Shaft Right Bearing Installe	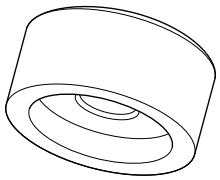 TPT00171

Tool Number	Description	Picture
TPT00173	345R Output Shaft Bearing Installer	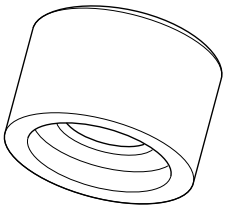 TPT00173
TPT00186	Left Differential Bearing Cup Remover	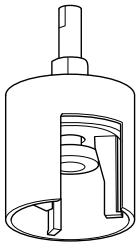 TPT00186
TPT00175	Left Differential Bearing Cup Installer	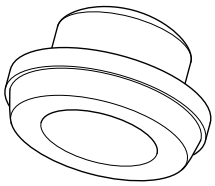 TPT00175
TPT00176	Right Differential Bearing Installer	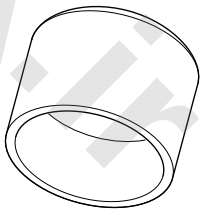 TPT00176
TPT00222	Right Differential Bearing Installer-AWD	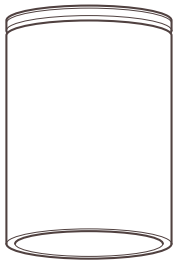 TPT00222

www.cargeek.ir

www.cargeek.ir

Transmission-6MT

Specifications

Torque

Description	Value
Bolt - engine to transmission	49–67Nm
Bolt - transmission mounting to body	55-65Nm
Bolt - transmission bracket to transmission bracket	90-110Nm
Nut - transmission bracket to transmission bracket	90-110Nm
Bolt - transmission to engine	49–67Nm
Bolt - release bearing	23–27Nm
Bolt-catalysts fixing bracket to catalysts	19–25Nm
Bolt-catalysts fixing bracket to transmission	49–67Nm
Bolt -battery bracket to body	40-50Nm
Bolt - gear shift lever cover to transmission housing	25–30Nm
Drain plug	30–40Nm
Filler plug	30–40Nm
Reverse lamp switch	23–27Nm
Bolt- expansion tank to body	4–6Nm
Bolt - transmission housing	23–27Nm
Bolt - final drive gear	90–100Nm
Plug	30–40Nm
Bolt - release bearing	10–14Nm
Interlock pin	15–20Nm
Bolt - gear selection/shift bracket	19–25Nm
Bolt - reverse idler gear shaft to transmission bottom housing	23–27Nm
Bolt - reverse idler gear shaft to transmission side housing	33–37Nm
Bolt - neutral position sensor	8–12Nm

www.cargeek.ir

www.cargeek.ir

Parameter

Model:	SCM250 6-speed Manual Transmission Matched with 1.5T Engine
Speed ratio: ·1st Gear ·2nd Gear ·3rd Gear ·4th Gear ·5th Gear ·6th Gear ·Reverse Gear ·Main Reduction	 4.385 2.348 1.351 1.049 0.946 0.756 3.72 3.632/4.059
Transmission Center Distance	79/95mm
Maximum input torque	250 (1st215) Nm
Maximum input speed	6800rpm
Mass (without oil)	48Kg
Lubricating Oil	MTF 94
Transmission Standard Oil Capacity: ·Drain and Refill ·Refill in Dry State	 2.2L 2.5 L
Maximum Transmission Boundary Dimension ·Length ·Width ·Height	 349.6mm 512.6mm 406.8mm
List of Disposable Assembly Parts:	Locking bolt Spring Pin Shift fork shaft bushing 15x15 Input shaft oil seal Cone Bearing Differential half axle oil seal Oil deflector Driven Shaft Front Bearing Gear selection/shift shaft needle bearing Spring pin (5x26) Gear selection/shift shaft oil seal Gear selection/shift shaft bushing Circlip Gear selection/shift shaft linear bearing

www.cargeek.ir

	Gear shift control pin Oil plug washer

www.cargeek.ir

www.cargeek.ir

Description and Operation

System Layout

Transmission Assembly Layout

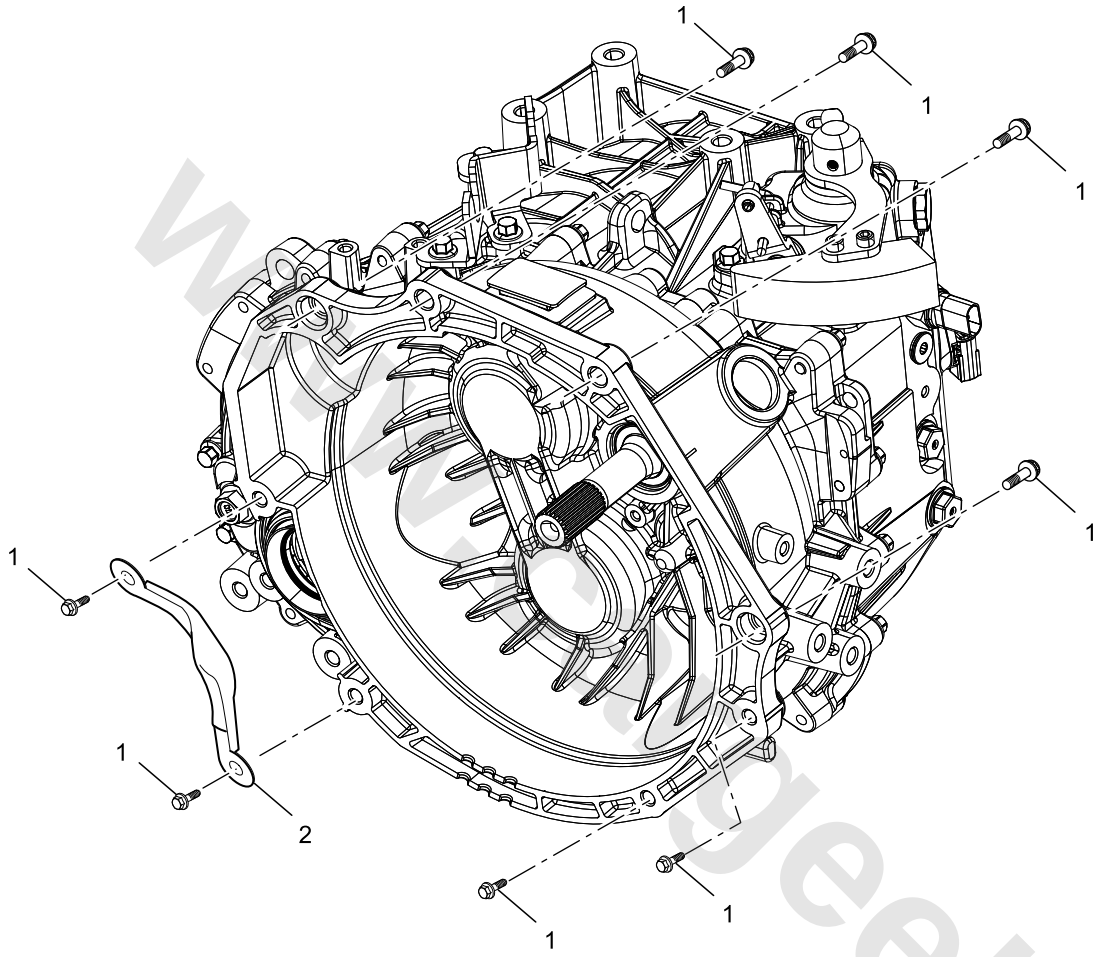

S1220100

1. Flange Bolt
2. Closing Panel

www.cargeek.ir

www.cargeek.ir

Transmission Assembly and Accessories

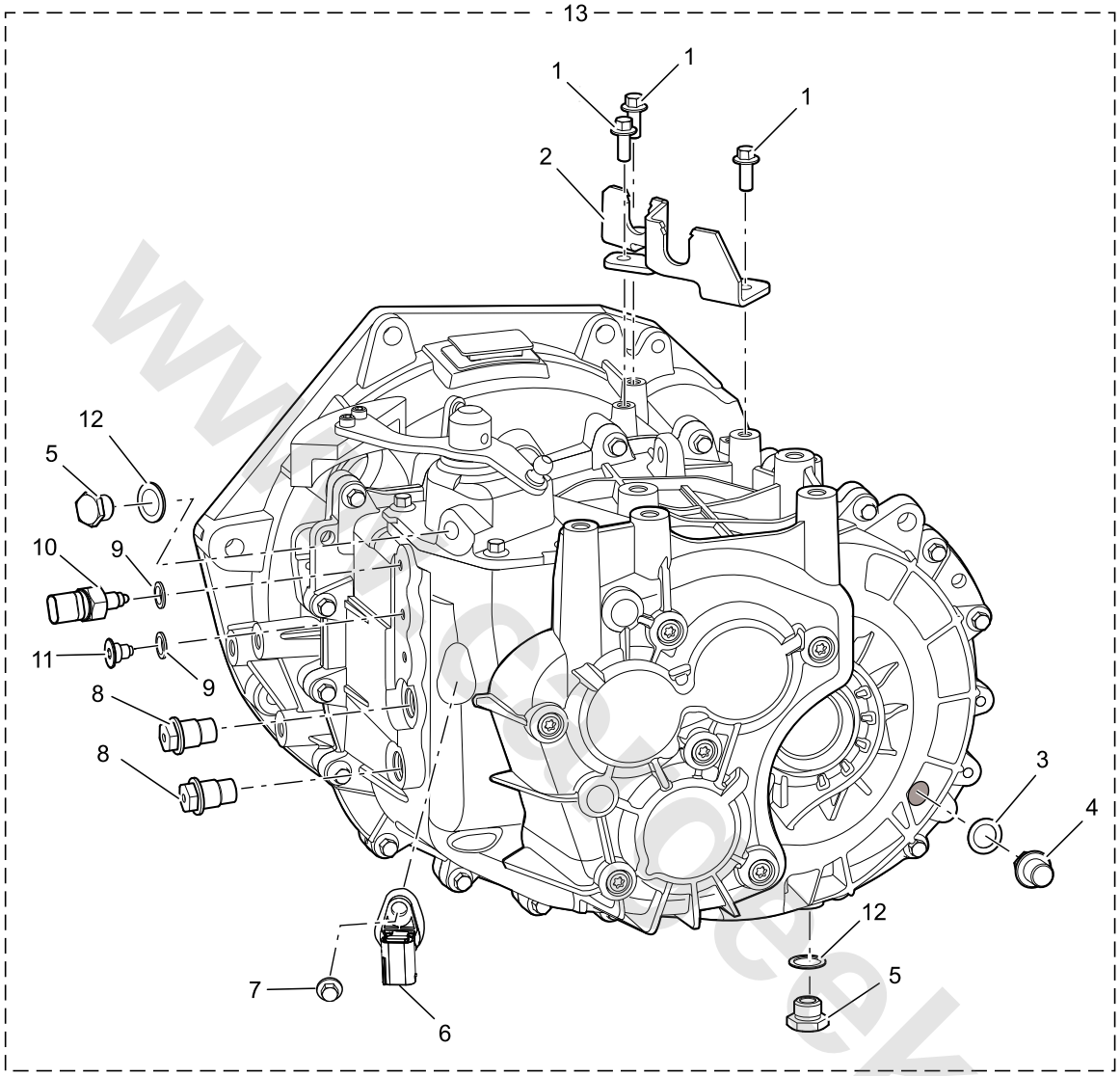

S1220101

1. Bolt - Gear Selection/Shift Bracket
2. Gear Selection/Shift Bracket
3. Oil Level Plug Washer
4. Oil Level Plug
5. Oil Plug
6. Neutral Position Sensor
7. Bolt - neutral position sensor
8. Locating Pin
9. Reverse Lamp Switch/Interlock Pin Washer
10. Reverse Lamp Switch
11. Interlock Pin
12. Oil Plug Washer
13. Transmission Assembly

www.cargeek.ir

Transmission Gear Shift Operating Mechanism and Housing

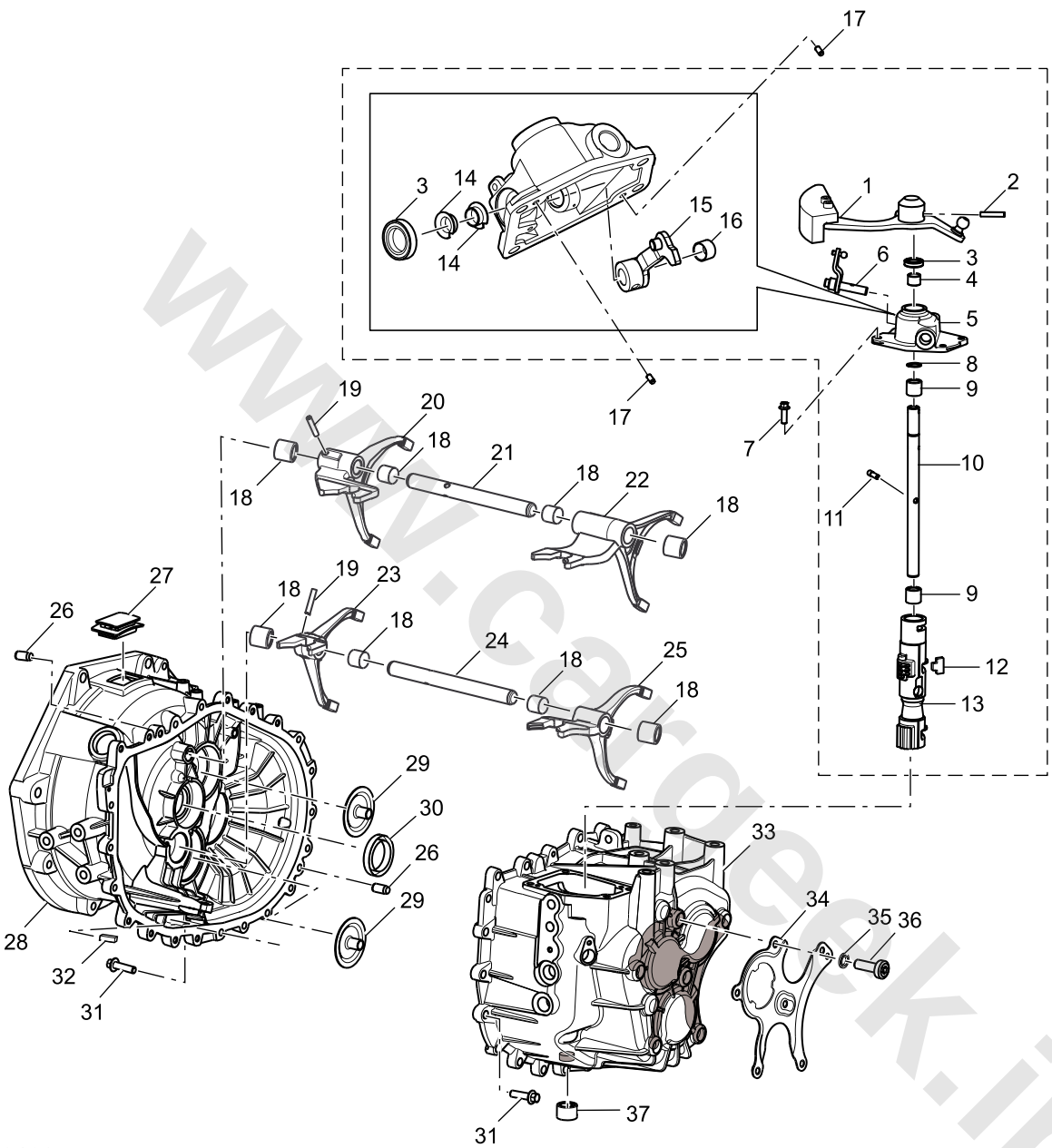

S1220102

1. Gear Shift Rocker Arm Welding Assembly
2. Spring Pin
3. Gear Selection/Shift Shaft Oil Seal
4. Gear Selection/Shift Shaft Sleeve
5. Gear Shift Cover
6. Gear Selection Rocker Arm Assembly
7. Bolt
8. Circlip
9. Gear Selection/Shift Shaft Linear Bearing
10. Gear Selection/Shift Shaft
11. Gear Shift Control Pin
12. Neutral Position Sensor Signal Block
13. Gear Selection/Shift Sleeve
14. Gear Selection Rocker Arm Shaft Sleeve 1
15. Inner Gear Selection Rocker Arm Assembly
16. Gear Selection Rocker Arm Shaft Sleeve 2
17. Gear Shift Cover Locating Pin
18. Shift Fork Shaft Bushing
19. Spring Pin
20. 1st/2nd Gear Fork
21. Shift Fork Shaft 1
22. 5th/6th gear fork
23. Reverse Gear Fork
24. Shift Fork Shaft 2

www.cargeek.ir

25. 3rd/4th Gear Fork
26. Locating Pin
27. Ventilation cap
28. Clutch Housing
29. Oil Nozzle
30. Input Shaft Oil Seal
31. Bolt
32. Magnetic Steel
33. Transmission Main Case
34. Bearing Cover
35. Sealing Washer
36. Inner Hexagon Bolt
37. Gear Selection/Shift Shaft Needle Bearing

www.cargeek.ir

www.cargeek.ir

www.cargeek.ir

Input Shaft Assembly

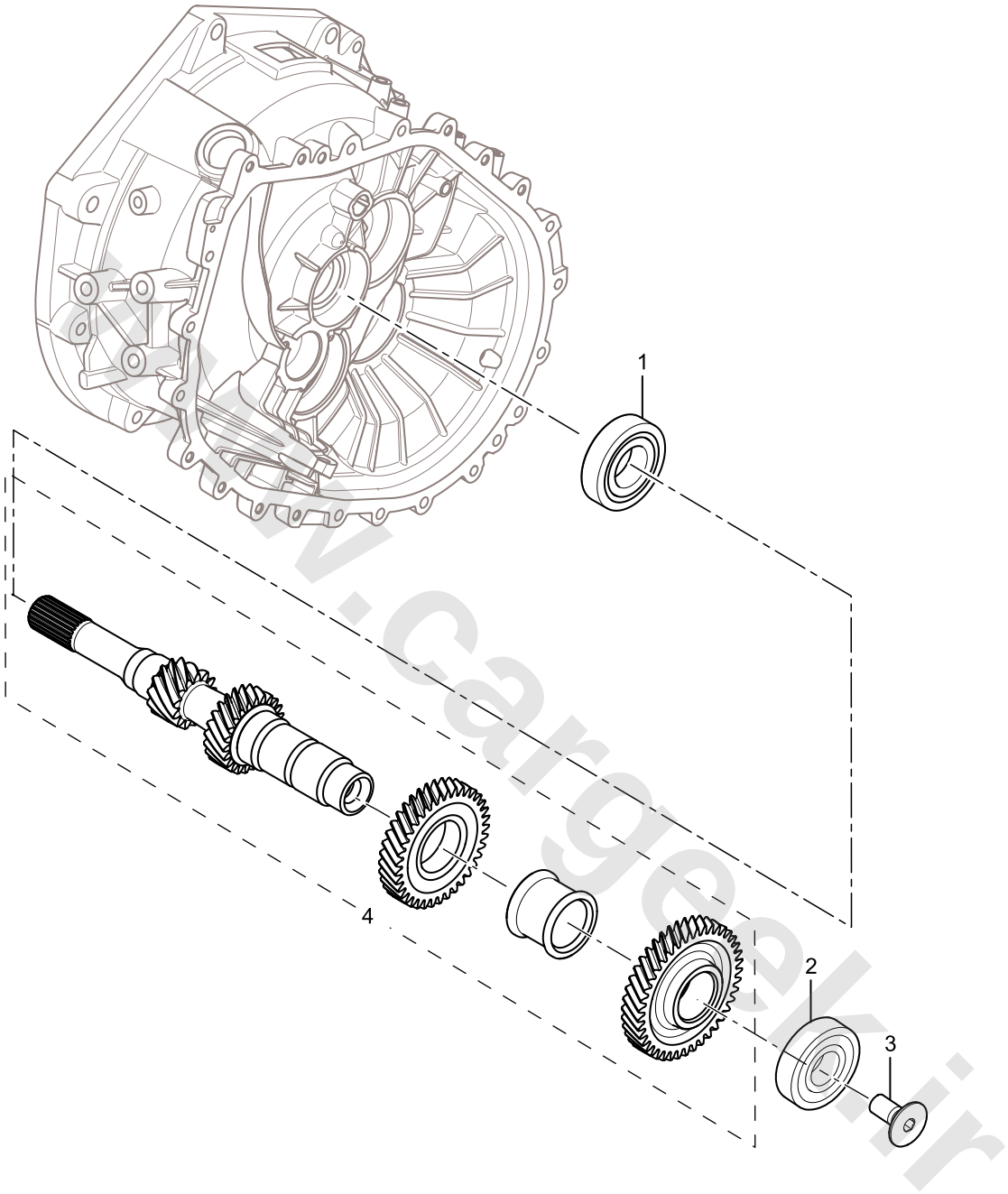

S1220103

1. Input Shaft Front Bearing
2. Input Shaft Rear Bearing
3. Locking Bolt
4. Input Shaft Assembly

www.cargeek.ir

Output Shaft 1 Assembly

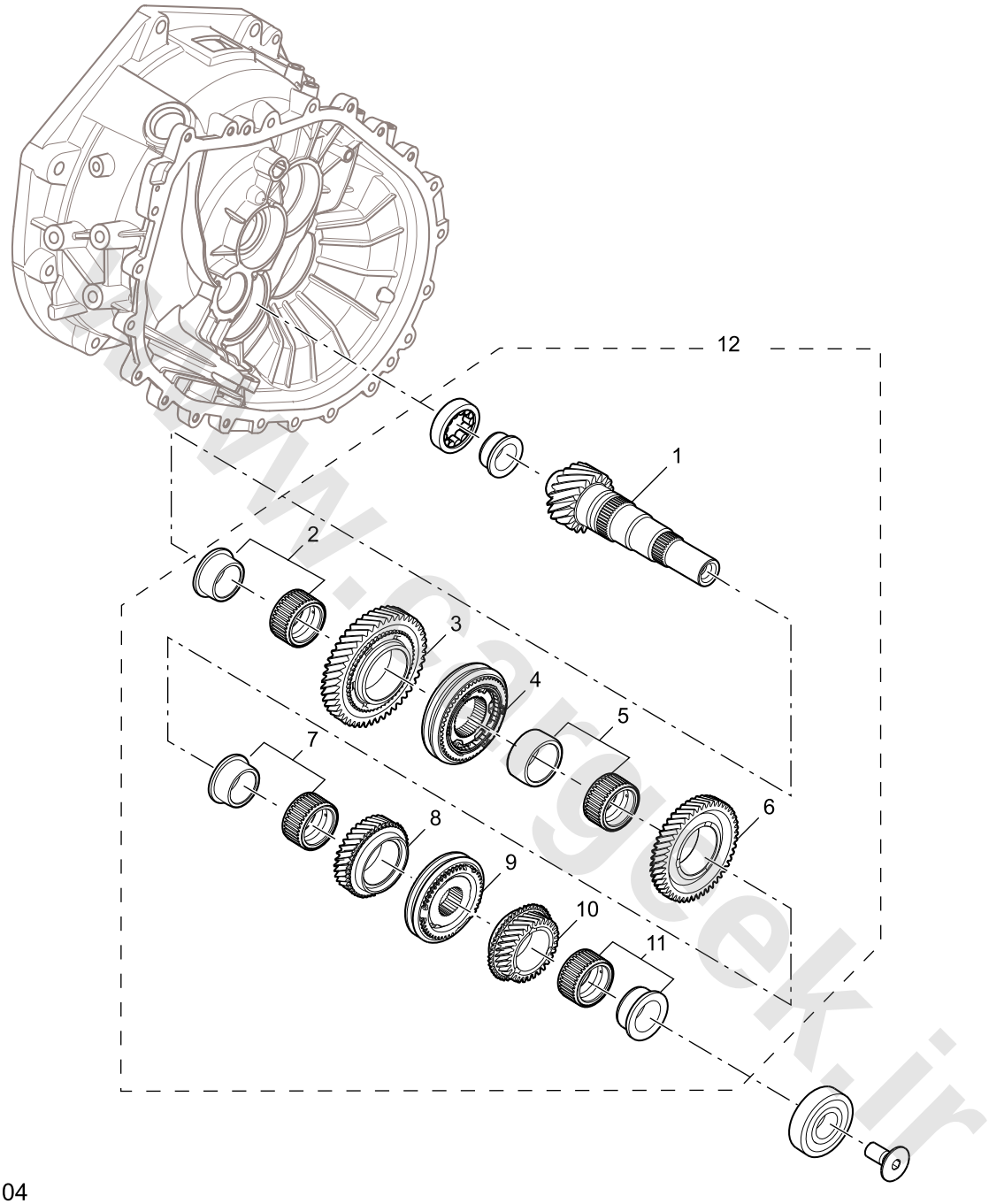

S1220104

1. Output Shaft 1
2. 1st Gear Needle Bearing and Inner Ring
3. Output Shaft 1st Gear Assembly
4. 1st/2nd Gear Synchronizer Assembly
5. 2nd Gear Needle Bearing and Inner Ring
6. Output Shaft 2nd Gear Assembly
7. 5th Gear Needle Bearing and Inner Ring
8. Output Shaft 5th Gear Assembly
9. 5th/6th Gear Synchronizer Assembly
10. Output Shaft 6th Gear Assembly
11. 6th Gear Needle Bearing and Inner Ring
12. Output Shaft 1 Assembly

www.cargeek.ir

www.cargeek.ir

Output Shaft 2 Assembly

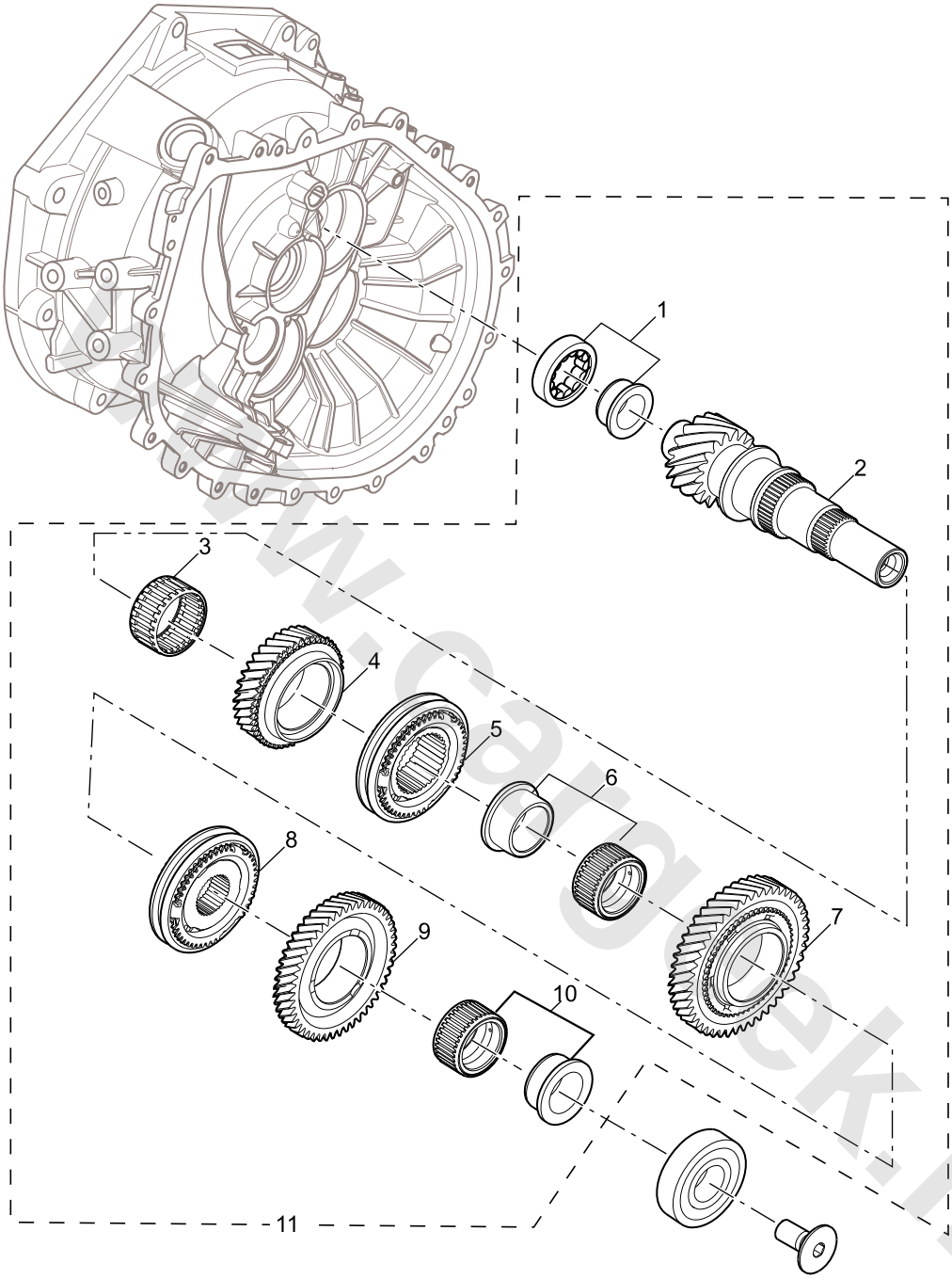

S1220105

1. Output Shaft 2 Front Bearing
2. Output Shaft 2
3. Reverse Gear Needle Bearing
4. Output Shaft Reverse Gear Assembly
5. Reverse Gear Synchronizer Assembly
6. 3rd Gear Needle Bearing And Inner Ring
7. Output Shaft 3rd Gear Assembly
8. 3rd/4th Gear Synchronizer Assembly
9. Output Shaft 4th Gear Assembly
10. 4th Gear Needle Bearing And Inner Ring
11. Output Shaft 2 Assembly

www.cargeek.ir

Reverse Idler Gear Shaft Assembly

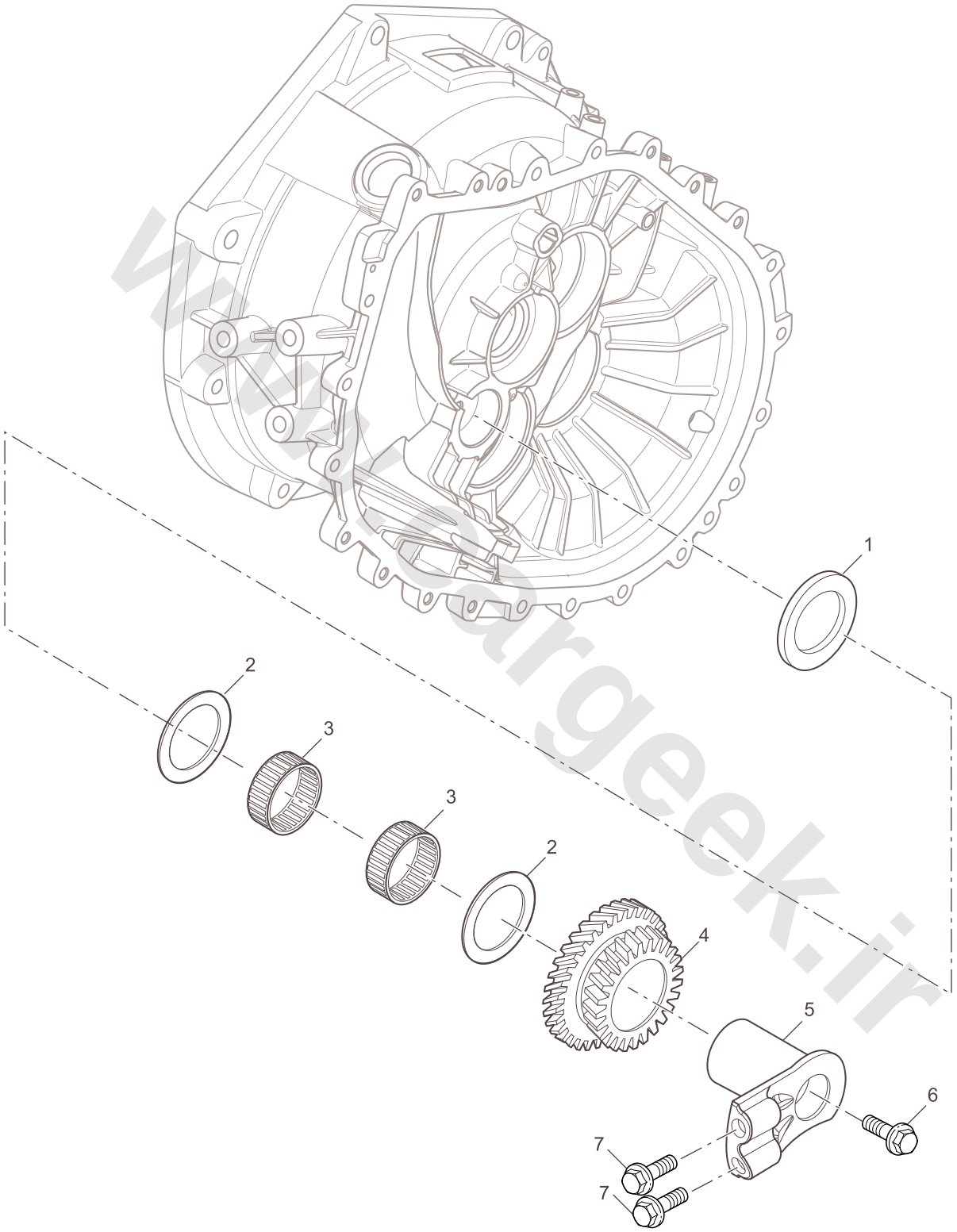

S1220023

1. Thrust Bearing
2. Reverse Idler Gasket
3. Reverse Idler Needle Bearing
4. Reverse Idler
5. Reverse Idler Shaft
6. Inner Hexagon Flat Head Bolt
7. Bolt

www.cargeek.ir

www.cargeek.ir

Differential Assembly

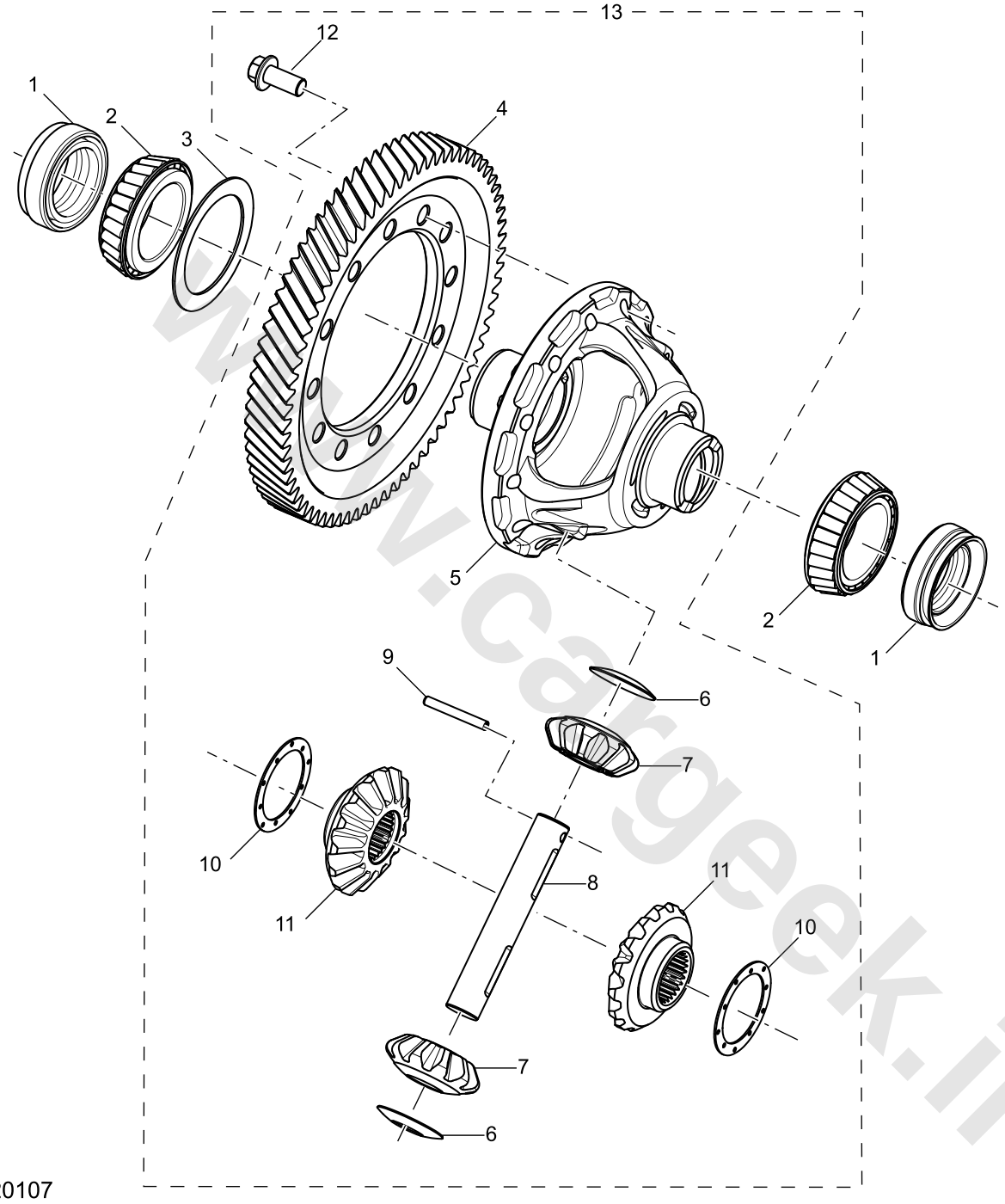

1. Differential Axle Shaft Oil Seal
2. Cone Bearing
3. Adjusting Washer
4. Main Reduction Gear
5. Differential Housing
6. Planetary Gear Gasket
7. Planetary Gear
8. Planetary Shaft
9. Spring Pin
10. Axle Shaft Gear Gasket
11. Axle Shaft Shaft Gear
12. Bolt
13. Differential Assembly

www.cargeek.ir

www.cargeek.ir

Description

Overview

This vehicle is equipped with a 6-speed manual transmission. The shift lever is located at the center console of the passenger compartment, it provides the driver with 7 choices for variable speed position, namely, 1st gear, 2nd gear, 3rd gear, 4th gear, 5th gear, 6th gear and reverse gear. The gears of all positions are engaged by the synchronizer. The drive shaft is fitted in the differential assembly at the rear of the transmission, and it is used to transmit the driving force to the wheel. The transmission housing is made of cast aluminum, and is connected to the engine cylinder block with bolts. The transmission input shaft and output shaft are supported by bearings. The transmission clutch case is equipped with an oil filler plug, and there is an oil drain plug at the lower rear side of the transmission main housing, both of them are sealed with an aluminum washer. The transmission is filled with lubricating oil so as to lubricate the internal components in a splashing manner.

Gear Shift and Gear Selection

Gear selection is realized by manipulating the shift lever fitted at the center console of the passenger compartment. Both cables have one end connected to the bottom of the shift lever, and the other end connected to the gear selection rocker arm and gear shift rocker arm fitted outside the transmission through the connector ring assembly. In the transmission case,the fork shaft is connected with the fork, turn an appropriate synchronizer to shift to the forward gear or the reverse gear.

Interlock Mechanism

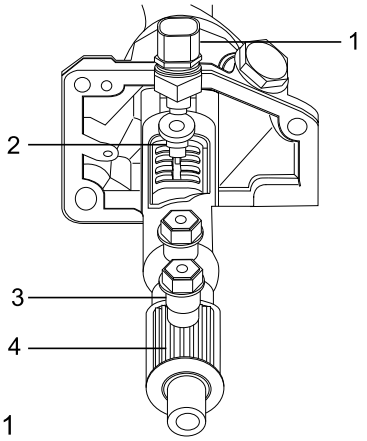

S1220188-1

1. Reverse Lamp Switch
2. Interlock pin
3. Locating pin
4. Pocket

The interlock pin cooperates with the set pin to restrict the sleeve motion. When a gear is selected, the sleeve position is restricted by the interlock pin in the axial direction, and the set pin will lock the radial motion of the sleeve through sleeve groove.

Reverse Gear Switch

The reverse lamp plunger switch is fitted on the transmission rear housing.

Neutral Position Sensor *

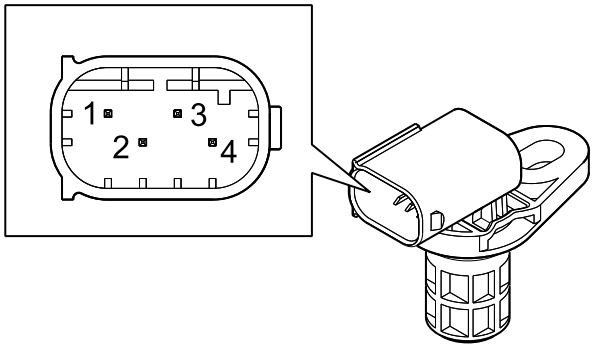

For the vehicle equipped with intelligent Stop/Start fuel saving system function, the neutral position sensor is fixed on the control seat of the transmission, and identifies whether the transmission is in neutral position by detecting the gear selection/shift shaft position in a non-touch manner. With the neutral position as the centre, the area within 8° range both left and right sides is defined as the neutral area, and the area outside this range will be considered as non-neutral area.

The operating temperature of the sensor is: -40~140°C.

Sensor Harness End Connector EB076

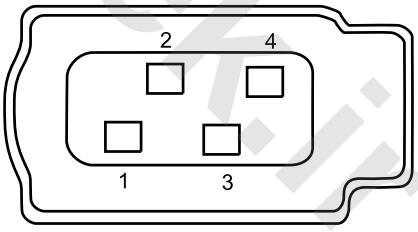

Definition of Sensor PINs

1: Power (12V)
2: N1 (neutral signal 1)
3: N2 (neutral signal 2)
4: Ground

Differential

Differential with traditional design fixed the driven gear of main reducing gear to differential housing with bolts, differential housing supports the planetary shaft pin, planetary gear and

www.cargeek.ir

sun gear. The differential assembly is supported by bearings in the transmission housing.

www.cargeek.ir

www.cargeek.ir

Operation

Transmission Assembly

Drivetrain changes the speed and direction of rotation through the engagement between different gears of the input shaft and output shaft, thereby generating 7 forward gears of different speed ratio and 1 reverse gear. The gear wheels of all other gears are constantly engaged. If the 1st gear is selected, the synchronizer gear ring is pressed by the synchronizer gear bushing so as to contact with the conical ring of the corresponding gear selected. In this way, the speeds of both synchronizer hub and gear are synchronized. Ensure that the taper head on the gear selection/shift sleeve can select the gear accurately and the gears are remained in the correct work position. After being transmitted from the engine to the transmission input shaft through the clutch,the torque is transmitted to the output shaft pinion and main reduction driven gear and then to the drive shaft through the selected gear. The operation of the 2nd, 3rd, 4th, 5th, 6th and reverse gears is the same with that of the 1st gear. When the reverse gear is selected, the reverse gear tooth (integrated with the input shaft) is engaged with the output shaft reverse gear tooth and reverse idler gear, hence, the rotation direction of the driven shaft is changed and the reverse gear is achieved.

Gear Shift and Gear Selection

When the shift lever is moved to the 1st gear position, the shift lever will control the gear selection/shift rocker arm through the cable. The gear selection rocker arm rotates and moves the gear selection/shift shaft through the torque of the cable, and the gear selection/shift taper head on the gear selection/shift shaft moves along with it and locates at the groove of the 1st/2nd shift fork, at this time, the gear selection/shift taper head shall be completely separated from the groove of 3rd/4th taper head. One end of the interlock pin will lock 1st/2nd gear. Then the gear shift rocker arm rotates the gear selection/shift shaft through the torque of the cable, and the gear selection/shift sleeve rotates along with the gear selection/shift shaft, one side of the gear selection/shift taper head turns 1st/2nd gear taper block to drive the operation of 1st/2nd gear synchronizer so as to achieve the gear selection/shift function of the 1st gear. The operations of other forward gears are the same as that of the 1st gear. When the shift lever is moved to reverse gear position, the reverse gear wheel is engaged with the reverse idler gear to change the rotation direction of the output shaft.

Neutral Position Sensor *

The neutral signal adopts independent 2-way redundancy design, to guarantee the safety and reliability of the output signal (N1, N2). Through hardwires, the N1 signal is inputted to **BCM**and the N2 signal to **ECM**. When the transmission is in neutral position, N1 is a low level signal (Lo), while N2 is a high level one (Hi); and it is vice versa when the transmission is engaged at a gear other than neutral.

High level is an approximate value that battery voltage subtracts 2V, and low level is about 0~1.5V.

	N1	**N2**
N gear	Lo	Hi
Gear other than Neutral	Hi	Lo

ECMECMalso monitors some faults of neutral position sensor, it is supposed to confirm whether there are faults in sensor through the real-time display parameter "Error Occurrence - Neutral Switch Sensor" on ECM, and meanwhile, **ECM** may also set DTC P081D.

Refer to Diagnosis Manual - Engine - Engine Fuel and Control System - Diagnose Information and Procedure for details

Differential

The differential allows the wheels to rotate at different speeds when the output torques are the same. The pinion integrated with the output shaft is engaged with the final drive driven gear of the differential assembly. When the output shaft rotates, and the wheels swivel straight forward, the torque will be applied to the whole assembly, and the planetary gear does not rotate. The torque is transmitted to the wheels through drive shaft. When the vehicle takes a turn, the inner wheels will pass a shorter distance at a lower speed. Thus it drives the planetary gear to rotate, and the outer sun gear offers a higher speed for outer wheels.

www.cargeek.ir

Power Sequence

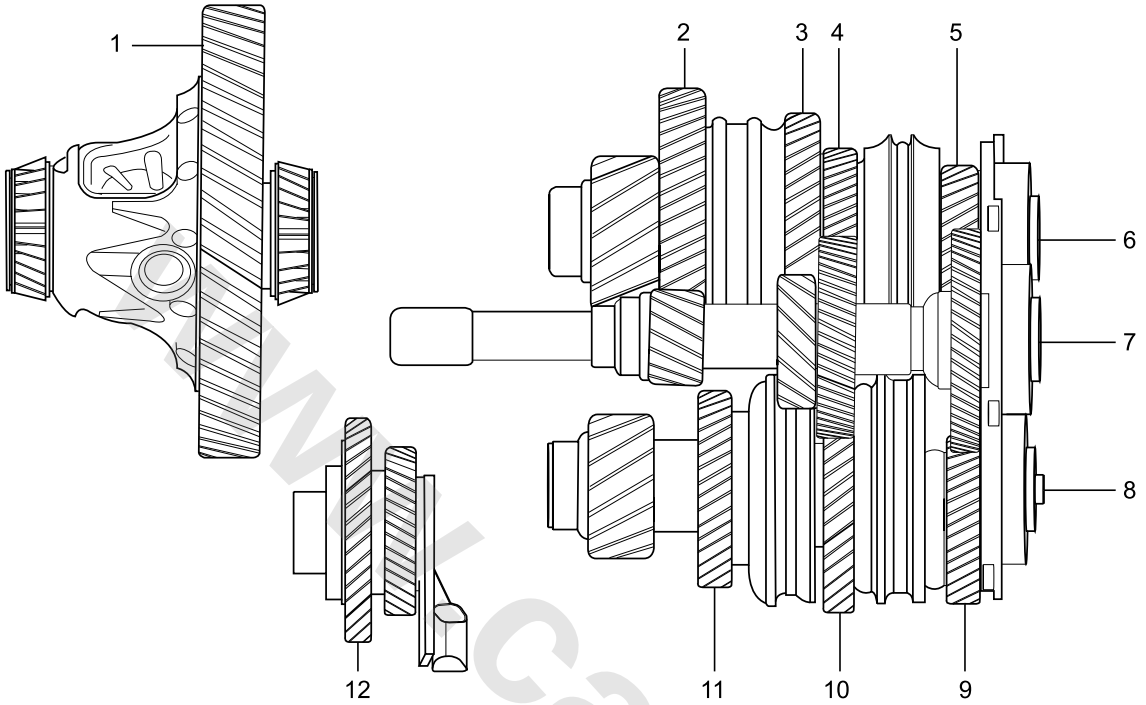

S1220197

1. Differential Assembly
2. Output Shaft 1st Gear Assembly
3. Output Shaft 2nd Gear Assembly
4. Output Shaft 5th Gear Assembly
5. Output Shaft 6th Gear Assembly
6. Output Shaft 1
7. Input Shaft
8. Output Shaft 2
9. Output Shaft 4th Gear Assembly
10. Output Shaft 3rd Gear Assembly
11. Output Shaft Reverse Gear Assembly
12. Reverse Gear Assembly

www.cargeek.ir

1st gear

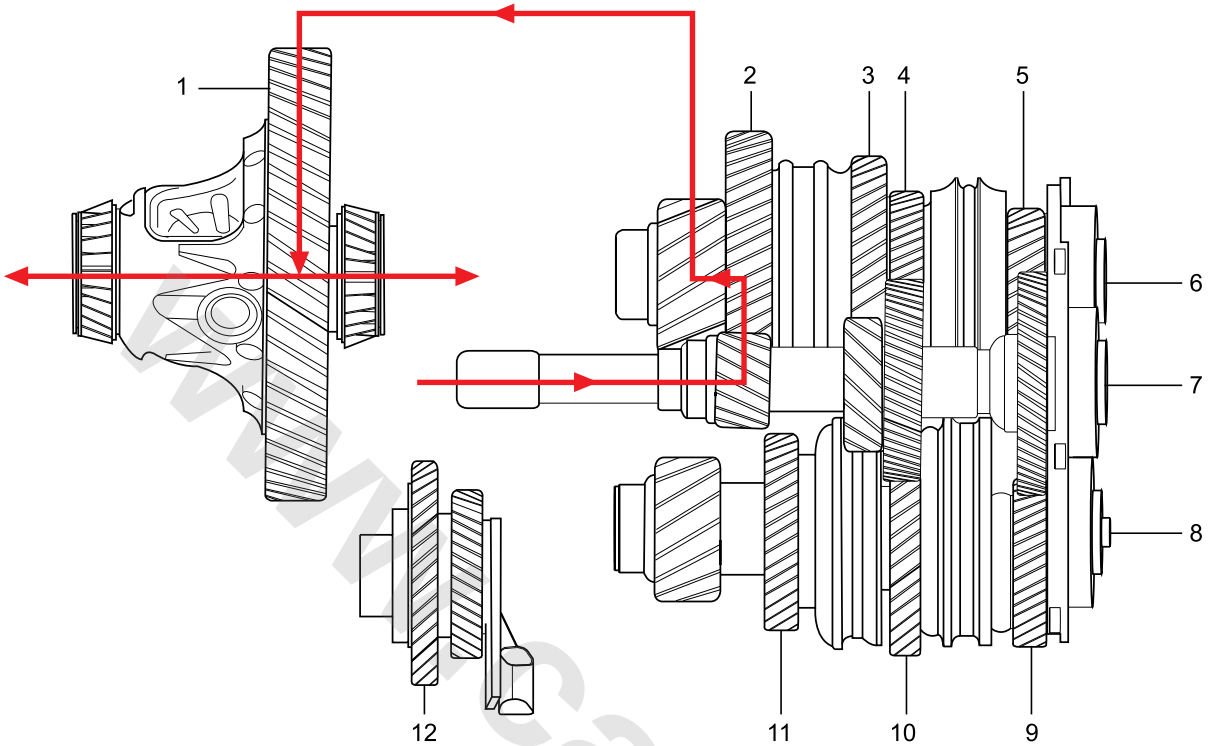

S1220190

www.cargeek.ir

2nd gear

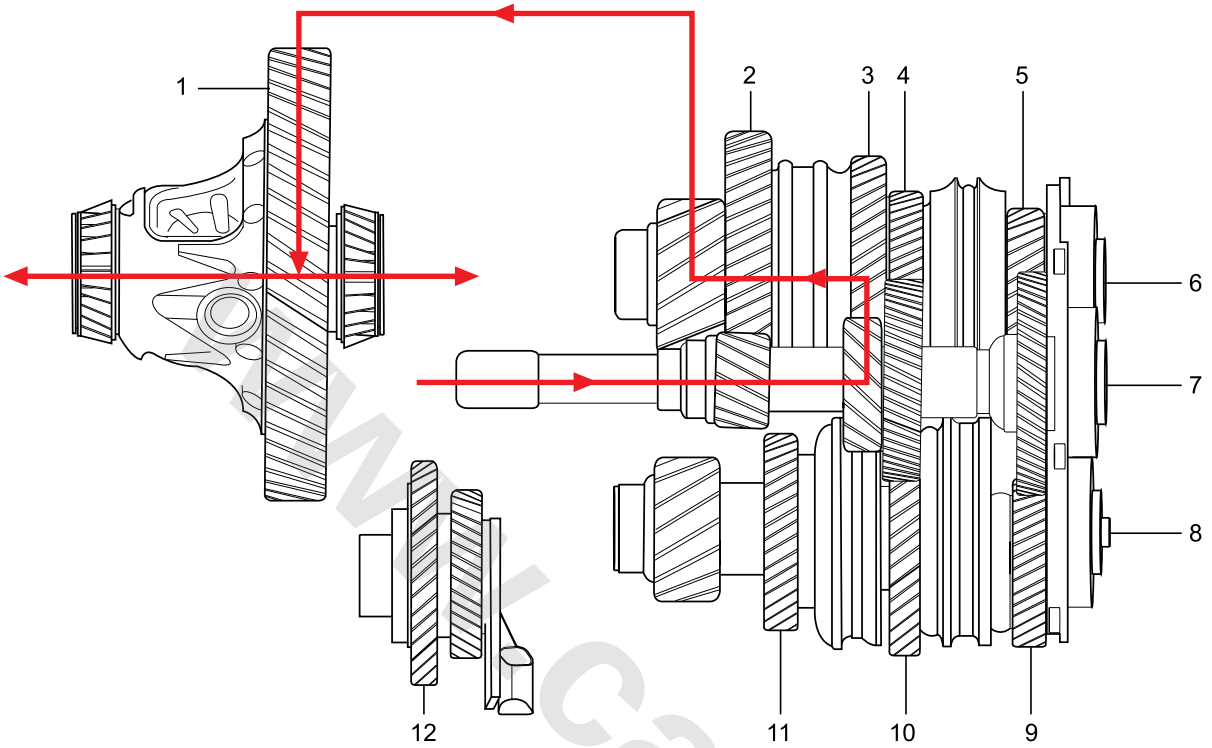

S1220191

www.cargeek.ir

www.cargeek.ir

www.cargeek.ir

3rd gear

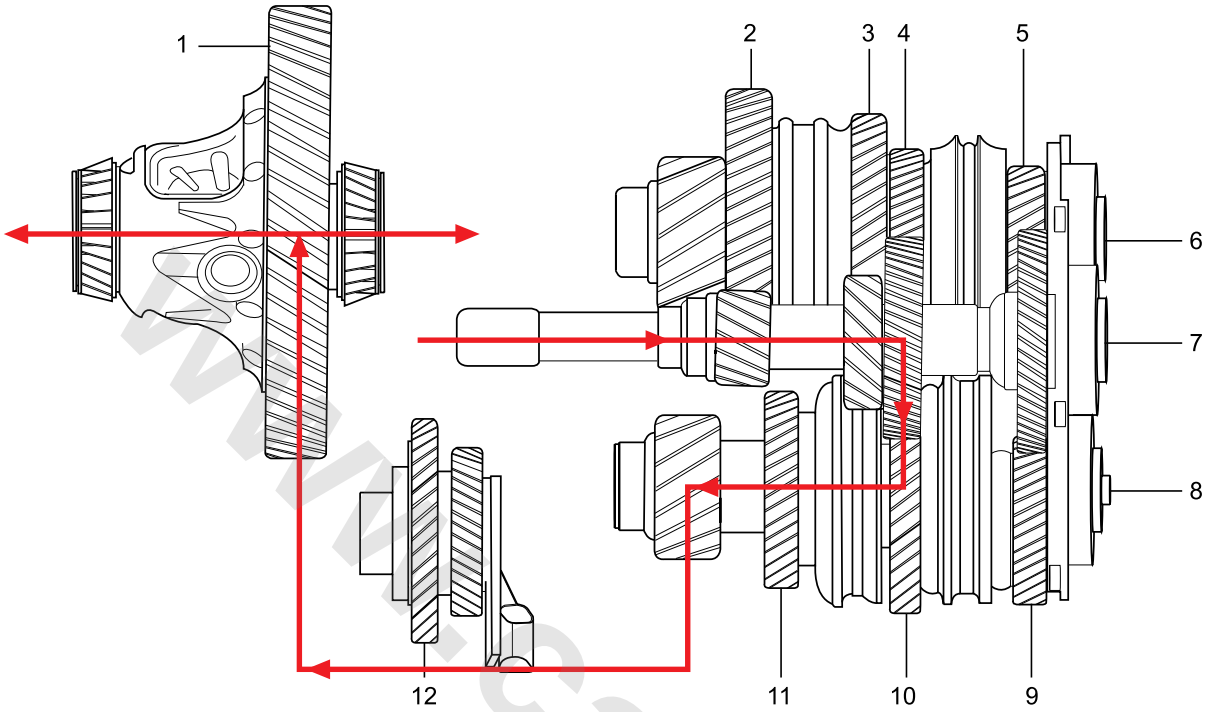

S1220192

www.cargeek.ir

www.cargeek.ir

4th gear

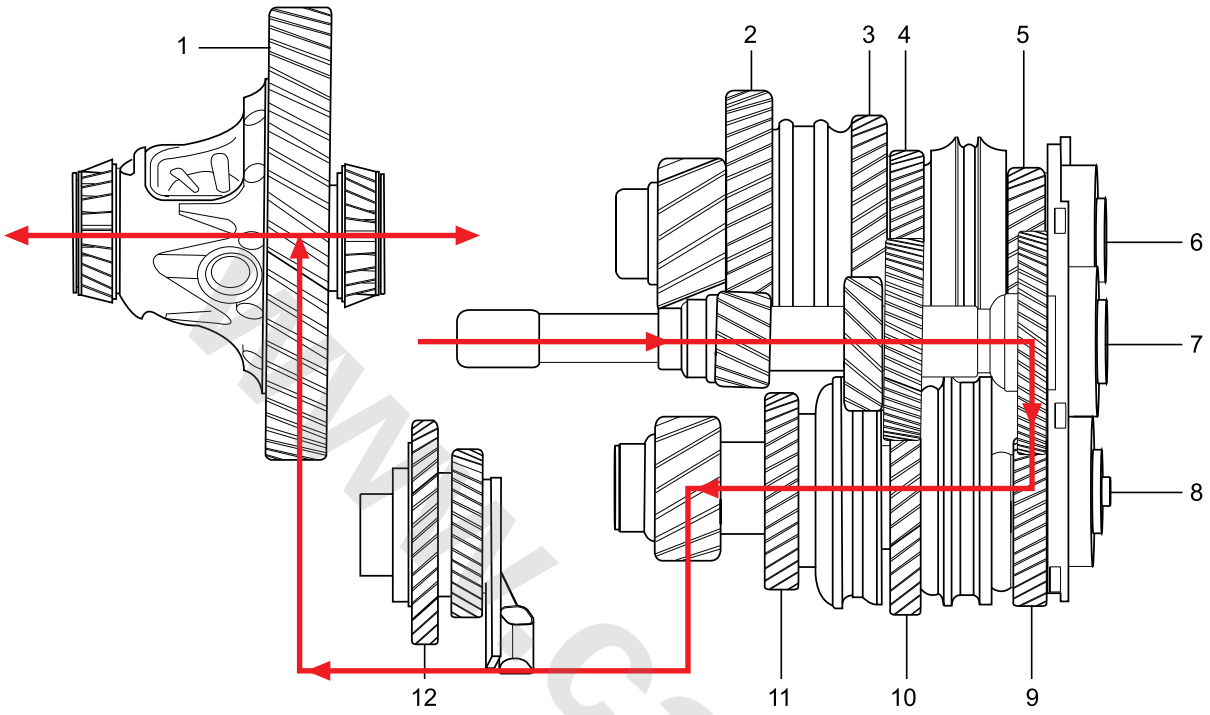

S1220193

www.cargeek.ir

www.cargeek.ir

5th gear

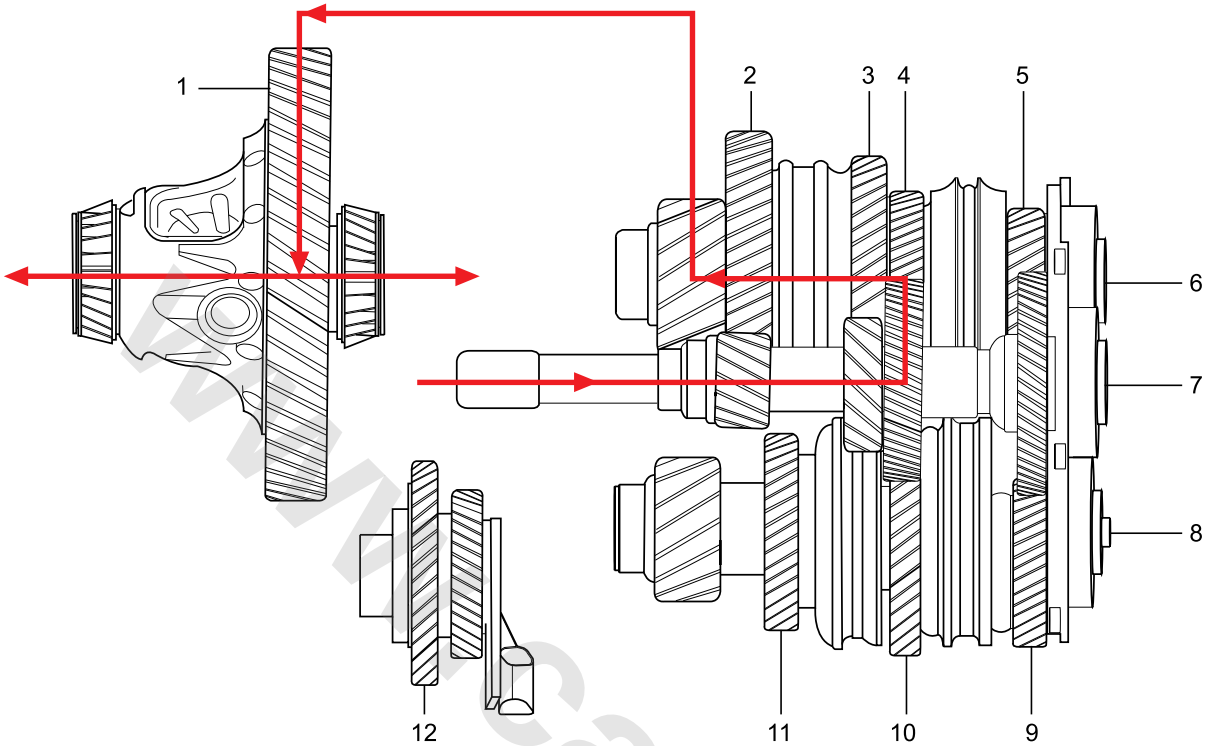

S1220194

www.cargeek.ir

www.cargeek.ir

6th Gear

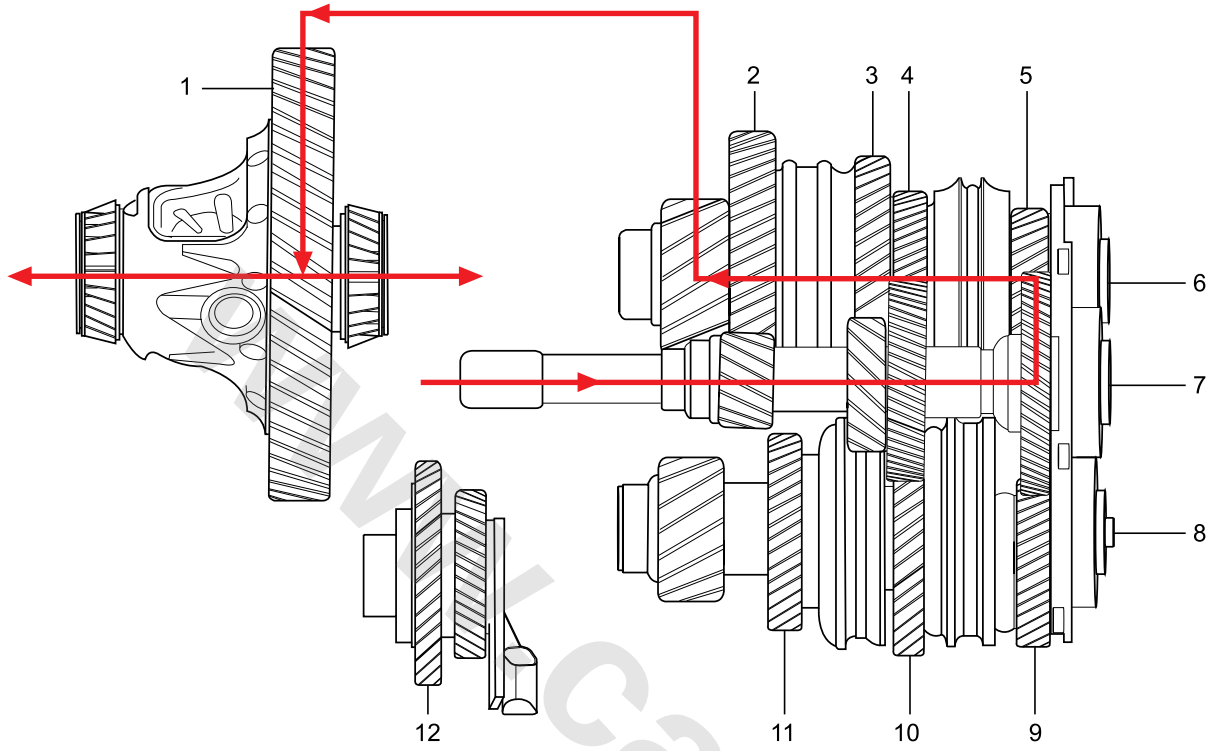

S1220195

www.cargeek.ir

www.cargeek.ir

R Gear

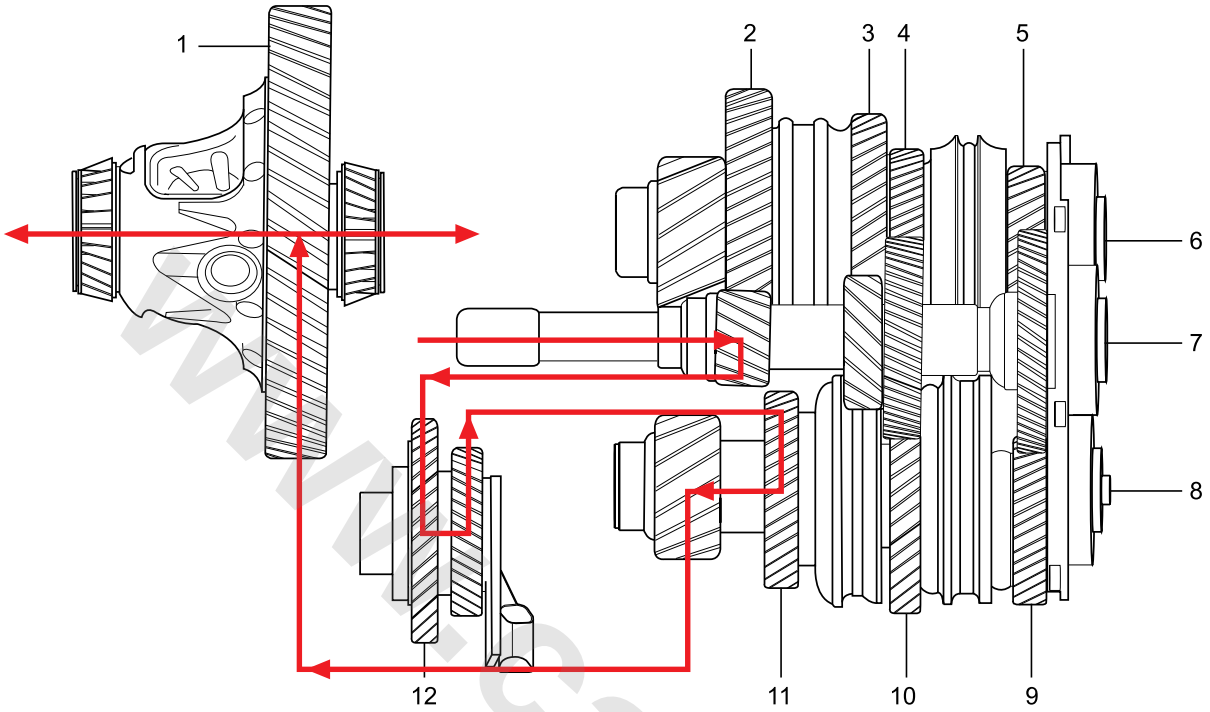

S1220196

www.cargeek.ir

www.cargeek.ir

Service Procedures

Manual Transmission Assembly

Remove

1. Fix the vehicle on lift.
2. Remove the battery box bracket.

Battery Box Bracket Remove

3. Remove the hose - turbocharged intercooler to throttle body.

Hose – Turbocharged Intercooler to Throttle Body Remove

4. Disconnect the connector from the reverse lamp switch.

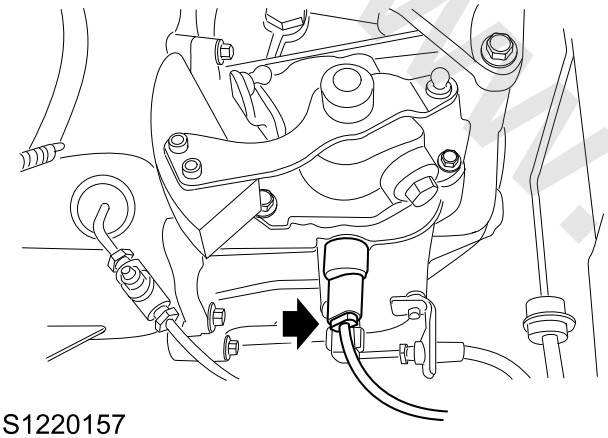

S1220157

5. Disconnect the neutral position sensor connector.

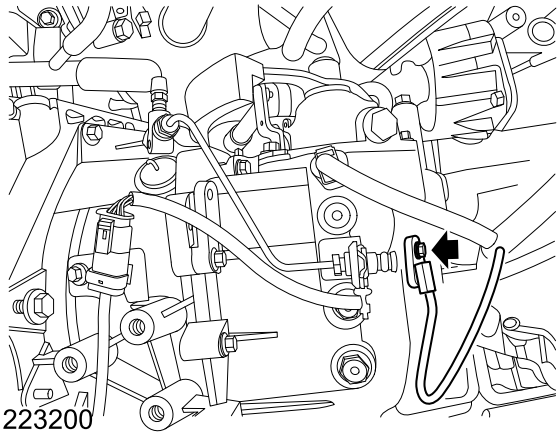

S1223200

6. Loosen the cable ball joints (1) from the gear selection/shift rocker arm of the manual transmission.
7. Loosen the clip (2), and then remove the gear selection/shift cable from the cable bracket.

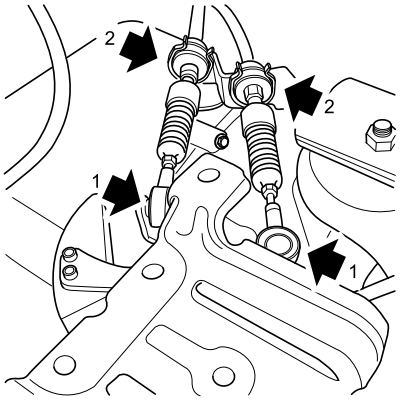

S1220149

8. Remove 2 bolts (1) fixing the catalytic converter bracket to the catalytic converter.
9. Remove 1 bolt (2) fixing the catalytic converter bracket to the transmission, and remove the catalytic converter bracket.

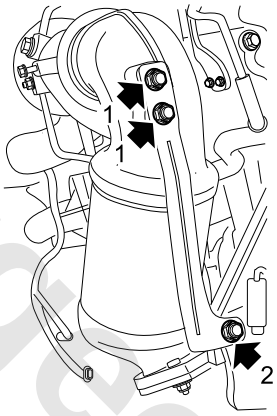

S9313525

10. Disconnect the connection between central release cylinder pipeline assembly and hose.
11. Fix the engine with the special tool **T10007** and **TEN00070**.

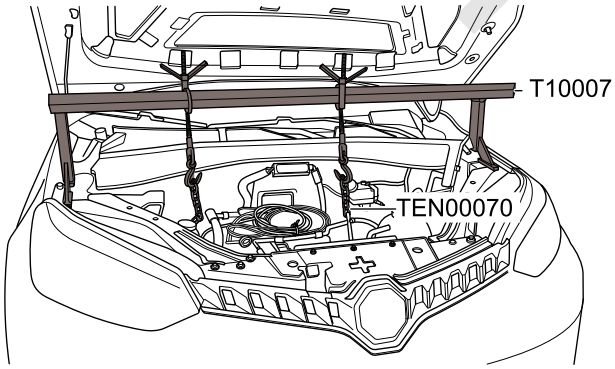

S1113568

12. Remove 3 bolts connecting the engine and the manual transmission.
13. Remove 4 connecting bolts between the upper part of transmission and the engine.

www.cargeek.ir

www.cargeek.ir

14. Remove 2 bolts and 1 nut fixing the transmission mount to the transmission.

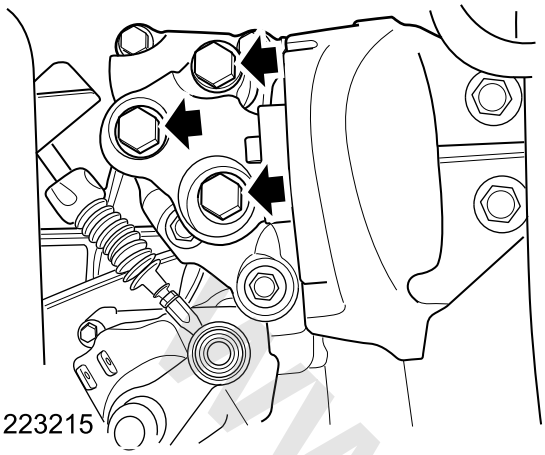

15. Remove 4 bolts fixing the transmission mount to the body, and remove the transmission mount.
16. Raise the vehicle on an elevator.

Warning: Do not work on or under a vehicle supported only by a jack. Always support the vehicle on safety stands.

17. Remove the bottom deflector.

☞**Bottom Deflector Remove**

18. Drain the manual transmission oil.

☞**Manual Transmission Oil Drain**

19. Remove the front subframe.

☞**Front Subframe Remove**

20. Remove the starter.

☞**Starter Motor Remove**

21. Support the manual transmission with a jack.
22. Remove 4 bolts connecting the engine and the manual transmission.
23. Support the bottom of the transmission with a bracket.
24. Remove 3 bolts connecting the transmission to the engine.
25. Move the transmission rightwards to separate the transmission from the engine.
26. Remove the transmission from the bracket.

Refit

1. Clean the connection surface between engine and transmission, and ensure that there is no foreign material.
2. Clean the locating pin on the engine and the locating pin hole of the transmission.
3. Fix the transmission to the bracket.
4. Adjust the transmission with other's help, and align the locating pin on the engine with the locating pin hole of the transmission.

Caution: *For the angle formed between flywheel connecting plate and clutch, you must be careful in operation of splicing the transmission to the engine to avoid a collision; otherwise, it may cause functional fault in the transmission!*

5. After the junction surface between engine and transmission is completely fit, fit 4 bottom bolts, tighten to **49–67Nm**, and check the torque.
6. Remove the transmission bracket.
7. Fit the starter.

☞**Starter Motor Refit**

8. Fit the front subframe.

☞**Front Subframe Refit**

9. Fit the bottom deflector.

☞**Bottom Deflector Refit**

10. Lower the vehicle.
11. Fix the transmission mount to the body, fit 4 bolts, tighten to **55-65Nm**, and check the torque.
12. Fix the transmission mount to the transmission, fit 2 bolts, tighten to **90-110Nm**, fit 1 nut, tighten to **90-110Nm**, and check the torque.
13. Fit 3 connecting bolts between the upper part of transmission and engine, tighten to **49–67Nm**, and check the torque.
14. Remove the special tool **T10007**.
15. Connect the central release cylinder pipeline assembly and hose, and tighten bolts to **23–27Nm**.
16. Fix the catalytic converter bracket to the catalytic converter, fit 2 nuts, tighten to **19–25Nm**, and check the torque.
17. Fix the catalytic converter support to the catalytic converter, fit 1 bolt, tighten to **49–67Nm**, and check the torque.
18. Locate the shift cable to cable bracket and fix with C-shaped clips.
19. Fit the shift cable ball joint to the shift rocker arm bulb.
20. Connect the connector of the neutral position sensor.
21. Connect the reverse lamp switch connector and fix the harness clip.
22. Fit the hose - turbocharged intercooler to throttle body

☞**Hose – Turbocharged Intercooler to Throttle Body Refit**

23. Fix 2 battery box brackets to the front longitudinal beam, fit 6 bolts, tighten to **40-50Nm**, and check the torque.
24. Fit the battery box bracket.

☞**Battery Box Bracket Refit**

www.cargeek.ir

25. Fill the manual transmission oil.

Manual Transmission Oil Refill

Gear Shift Control Mechanism Assembly

Remove

1. Remove the battery box bracket.

Battery Box Bracket Remove

2. Ensure that the shift lever is in neutral position.
3. Loosen the cable ball joints (1) from the gear selection/shift rocker arm of the manual transmission.
4. Loosen the clip (2), and then remove the gear selection/shift cable from the cable bracket.

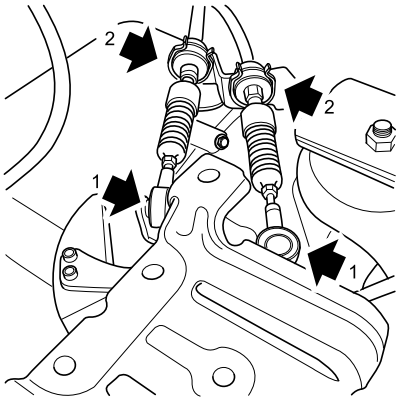

S1220149

5. Remove the reverse lamp switch, set pin and interlock pin.

Transmission Accessories and Release Mechanism Remove

6. Remove the bolts fixing the gear selection/shift control mechanism assembly to the case, and remove the control mechanism assembly.
7. Knock out the coiled spring pin fixing the gear selection/shift shaft to the control cover with punching tools, discard it, and remove the gear shift rocker arm.

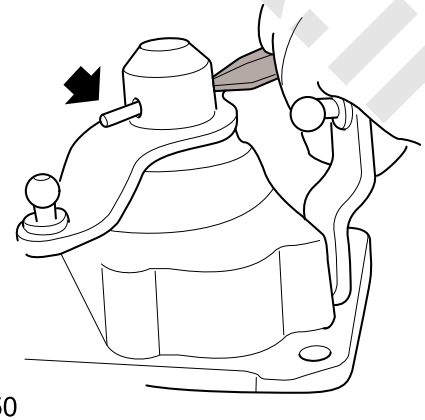

S1220150

8. Pull the gear selection/shift shaft out of the control cover, remove the gear selection/shift shaft oil seal at the top of the control cover.
9. Knock out the gear selection rocker arm pin in the control cover with tools, discard it and separate the external gear selection rocker arm shaft and the

www.cargeek.ir

www.cargeek.ir

external gear selection rocker arm.

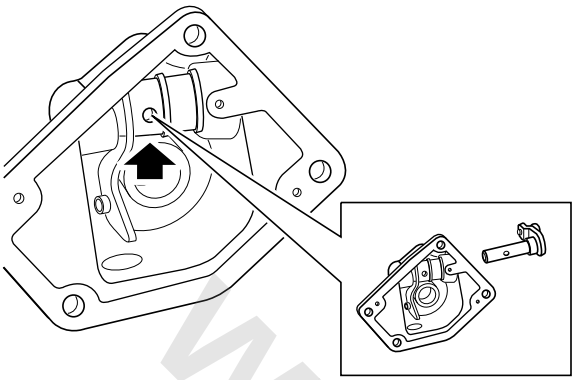

S1220151

10. Remove the gear selection rocker arm shaft oil seal in the side of the control cover.
11. Knock out the locating pin on the gear selection/shift shaft sleeve with punching tools, discard it and separate the gear selection/shift shaft sleeve and the gear selection/shift shaft.

Refit

1. Fit 2 linear bearings into the gear selection/shift shaft sleeve with **TPT00119**.

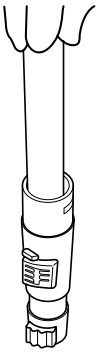

S1220152

2. Insert the gear selection/shift shaft into the gear selection/shift shaft sleeve, and knock in the elastic pins with **TPT00136** for fixation.

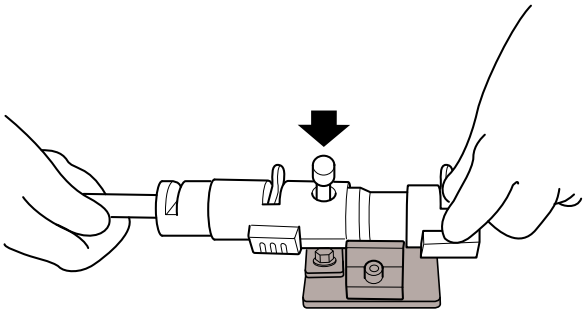

S1220153

3. Fit the gear selection/shift shaft oil seal into the shaft hole at the top of the control cover with **TPT00120**.

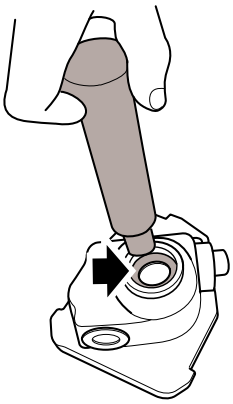

S1220154

4. Fit the gear selection rocker arm shaft oil seal into the side rocker arm shaft hole of the control cover with **TPT00121**.

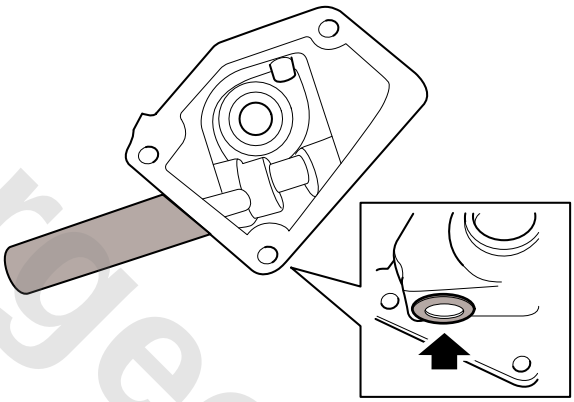

S1220155

5. Fit the gear selection rocker arm shaft and shaft sleeve into the case, and the shaft end transmission case linear bearing.
6. Fit the gear selection/shift shaft bushing (A) into the gear selection/shift shaft hole of the control cover with **TPT00124**; Fit the rocker arm shaft outer curling bushing (B) into the rocker arm shaft hole of the control cover with **TPT00122**; Fit the rocker arm shaft inner curling bushing (C) into the rocker arm shaft hole of the control cover with **TPT00131**.

www.cargeek.ir

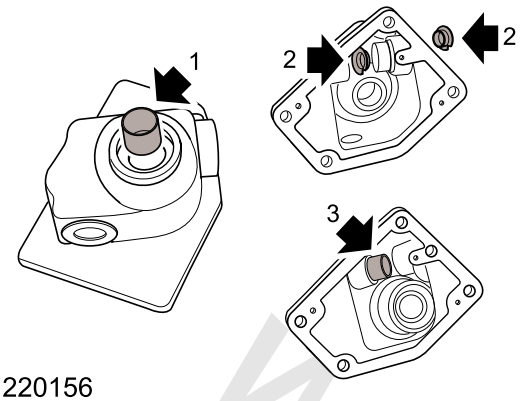

S1220156

7. Clean the mating surface of the control cover and the rear case, and apply sealant evenly.
8. Fit the gear shift rocker arm and control cover into the case and tighten the bolts to **25–30Nm**.
9. Remove the reverse lamp switch, set pin and interlock pin.

Transmission Accessories and Release Mechanism Refit

10. Insert a new coiled spring pin into the gear shift rocker arm shaft head for fixation.
11. Connect the cable joint ball to the gear selection/shift rocker arm.
12. Fit the battery box bracket.

Battery Box Bracket Refit

Manual Transmission Fluid - Drain and Refill

Drain

1. Raise the vehicle on an elevator.

Warning: Do not work on or under a vehicle supported only by a jack. Always support the vehicle on safety stands.

2. Put a proper container under the transmission.
3. Clean the surrounding area of oil drain plug (2), remove the oil drain plug and discard the sealing gasket.

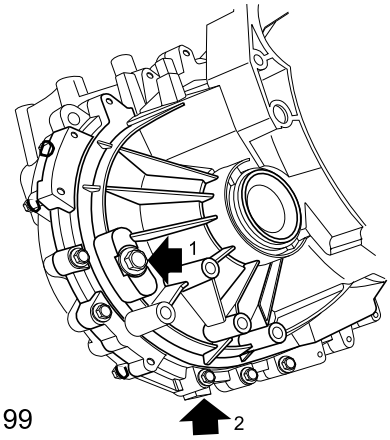

S1220199

4. Drain the transmission oil.
5. Clean the oil drain port.
6. Place the new sealing gasket on the oil drain plug, fit the oil drain plug and tighten to **30–40Nm**.

Refill

1. Clean the surrounding area of oil filler plug (1), remove the oil filler plug and discard the sealing gasket.

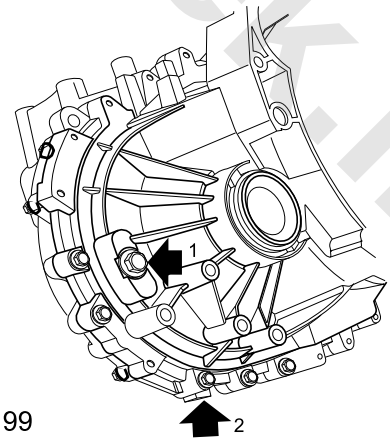

S1220199

2. Fill the transmission oil in the transmission with a proper tool through the oil filler.

·Drain and Refill	2.2 L
Refill from Dry State	2.5 L

3. Place the new sealing gasket on the oil filler plug, fit the oil filler plug and tighten to **30–40Nm**.
4. Lower the vehicle.

www.cargeek.ir

Reverse Lamp Switch - Manual

Remove

1. Disconnect the battery negative cable.
2. Remove 2 bolts fixing the coolant expansion tank to the vehicle frame, and then remove the coolant expansion tank.

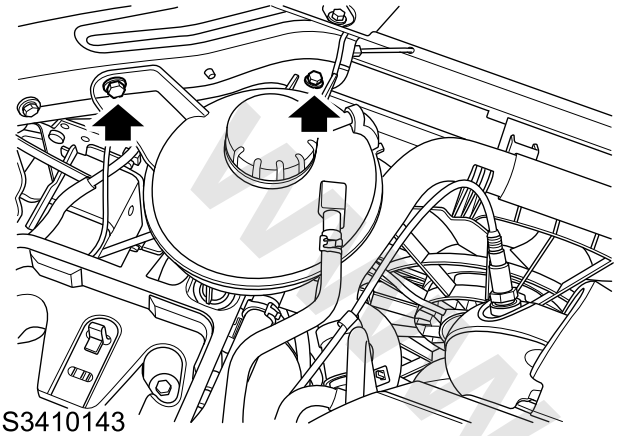

S3410143

3. Disconnect the reverse lamp switch connector.

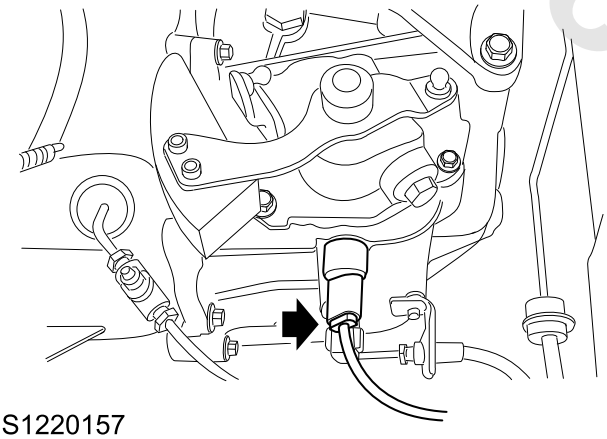

S1220157

4. Remove reverse lamp switch.

Refit

1. Clean the mating surface of components.
2. Fit the reserve lamp switch to the transmission and tighten to **23–27Nm**, check the torque.
3. Connect the reserve lamp switch connector.
4. Fix the coolant expansion tank to the vehicle frame; fit 2 bolts and tighten to **4–6Nm** and check the torque.
5. Connect the battery negative cable.

Left Differential Oil Seal - Manual

Remove

1. Raise the vehicle on an elevator.

Warning: Do not work on or under a vehicle supported only by a jack. Always support the vehicle on safety stands.

2. Drain the manual transmission oil.

☞ **Manual Transmission Oil Drain**

3. Remove left drive shaft assembly.

☞ **Left Drive Shaft Assembly Remove**

4. Remove the differential oil seal and discard it.

Caution: *Do not damage the oil seal groove.*

Refit

1. Clean the oil seal groove.
2. Fit the new oil seal with **TPT00130**.

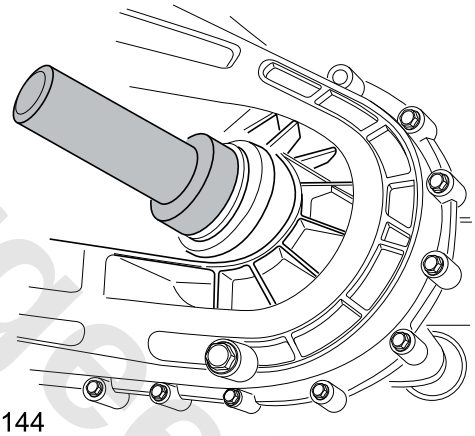

S1220144

3. Fit the left drive shaft assembly.

☞ **Left Drive Shaft Assembly Refit**

4. Fill the manual transmission oil.

☞ **Manual Transmission Oil Refill**

www.cargeek.ir

Right Differential Oil Seal - Manual

Remove

1. Raise the vehicle on an elevator.

Warning: Do not work on or under a vehicle supported only by a jack. Always support the vehicle on safety stands.

2. Drain the manual transmission oil.

Manual Transmission Oil Drain

3. Remove right drive shaft assembly.

Right Drive Shaft Assembly Remove

4. Remove the differential oil seal and discard it.

Caution: *Do not damage the oil seal groove.*

Refit

1. Clean the oil seal groove.
2. Fit the new oil seal with **TPT00130**.

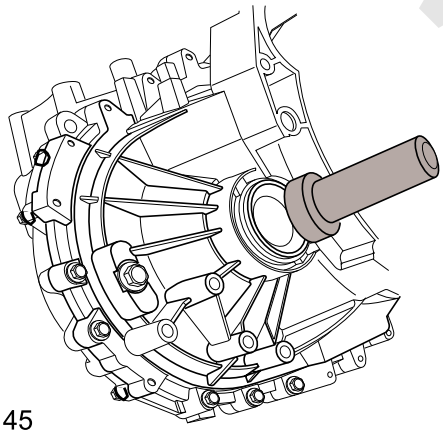

S1220145

3. Fit the right drive shaft assembly.

Right Drive Shaft Assembly Refit

4. Fill the manual transmission oil.

Manual Transmission Oil Refill

Manual Transmission Remove

Remove

1. Raise the vehicle on an elevator.

Warning: Do not work on or under a vehicle supported only by a jack. Always support the vehicle on safety stands.

2. Drain the manual transmission oil.

Manual Transmission Oil Drain

3. Remove the manual transmission assembly.

Manual Transmission Assembly Remove

4. Remove the gear selection/shift control mechanism assembly.

Gear selection/Shift Control Mechanism Assembly Remove

5. Remove the transmission accessories and release mechanism.

Transmission Accessories and Release Mechanism Remove

6. Place the transmission inverted, and remove the rear case bearing cover plate bolts.

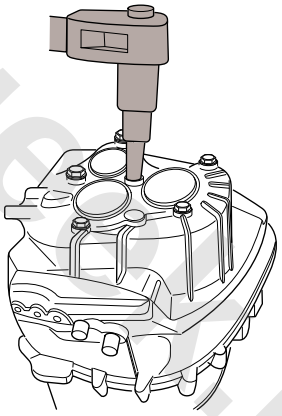

S1220162

7. Remove the housing connecting bolts.

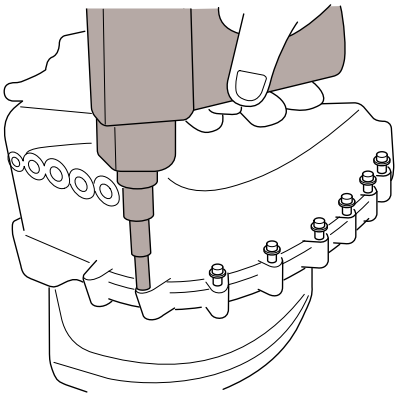

S1220105

8. Remove the housing reverse connecting bolts.

www.cargeek.ir

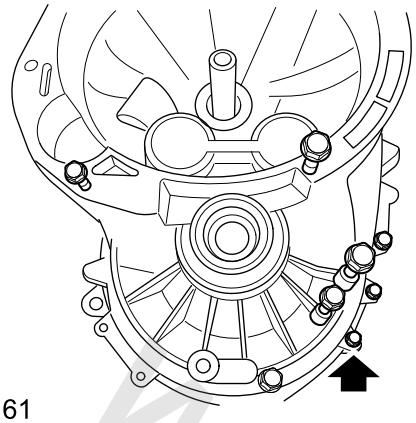

S1220161

9. Separate the transmission housing.

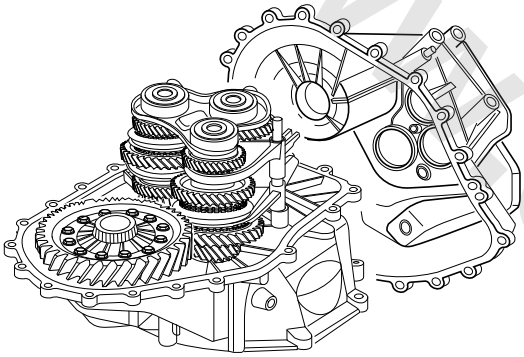

S1220163

10. Remove the reverse idle gear assembly.

Reverse Idler Gear Assembly Remove

11. Hold out the shaft and fork assembly.

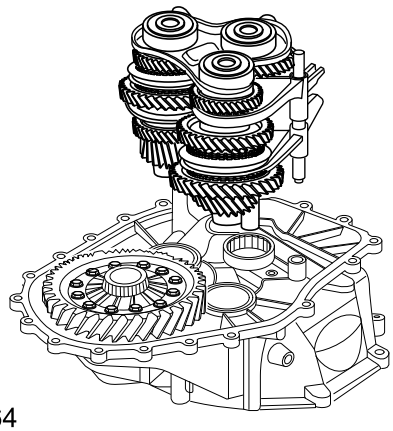

S1220164

12. Remove the differential assembly.

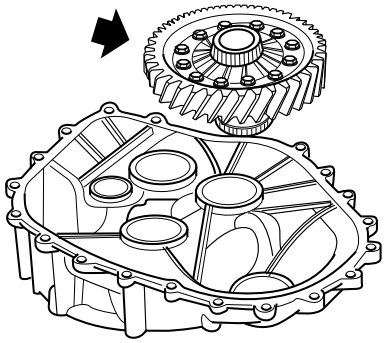

S1220165

Refit

1. Fit the oil deflector to the clutch housing.
2. Fit the differential tapered bearing outer ring on the clutch housing and transmission with **TPT00128**.

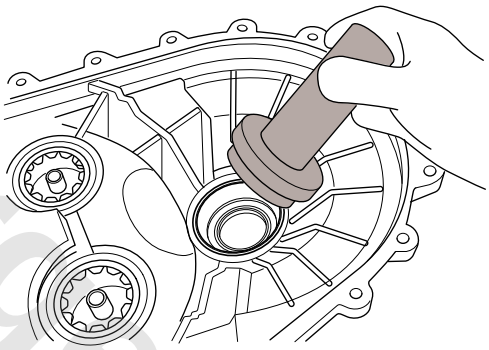

S1220166

3. Fit the input shaft oil seal into the clutch housing with **TPT00127**.

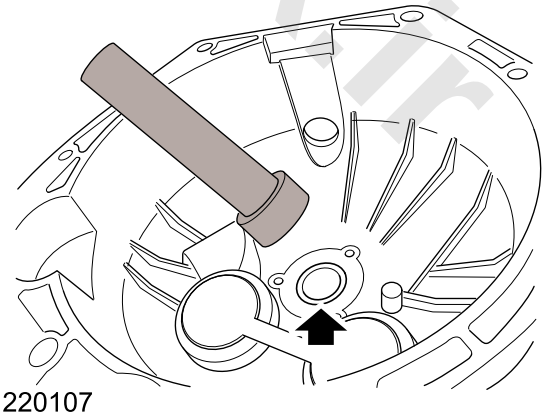

S1220107

4. Fit the gear selection/shift shaft linear bearing on the transmission case with **TPT00138**.

www.cargeek.ir

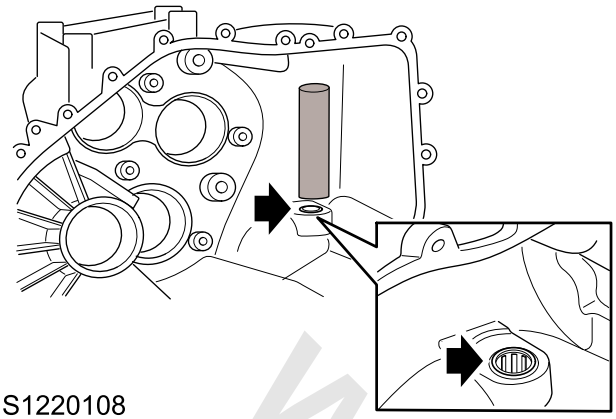

S1220108

5. Fit the fork shaft bushing on the clutch housing and transmission case with **TPT00123**.

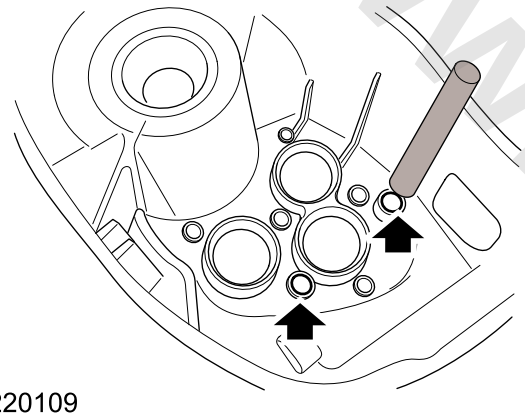

S1220109

6. Fit the differential oil seal on the clutch housing and transmission case.
7. Fit the shaft assembly, fork assembly and differential assembly into the clutch housing with **TPT00126**.

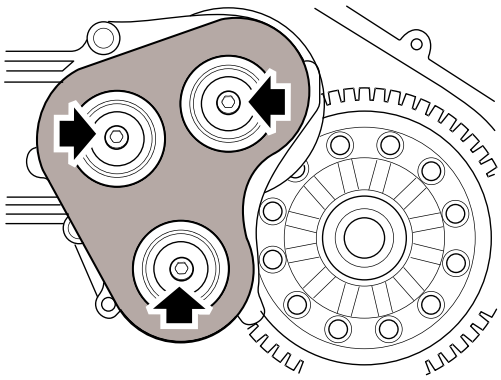

S1220110

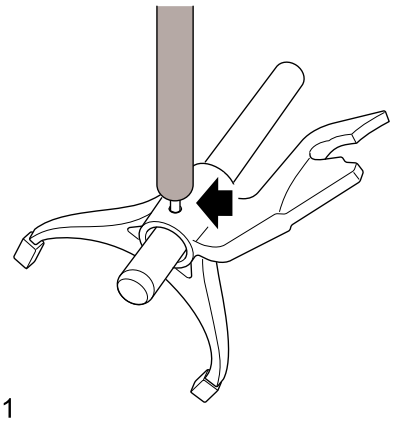

S1220111

8. Fit the reverse idle gear assembly.

☞**Reverse Idler Gear Assembly Refit**

9. Apply sealant to the clutch housing. Assemble the transmission case together with the clutch housing with set pins.
10. Fit the case connecting bolts and tighten to **23–27Nm**.
11. Place the transmission inverted, fit the reverse connecting bolts of the case and tighten to **23–27Nm**.
12. Fit the bearing cover plate bolts and tighten to **25–30Nm**.
13. Fit the transmission accessories and release mechanism.

☞**Transmission Accessories and Release Mechanism Refit**

14. Fit the gear shift control mechanism assembly.

☞**Select /Shift Control Mechanism Assembly Refit**

15. Fit the manual transmission assembly.

☞**Manual Transmission Assembly Refit**

16. Fill the manual transmission oil.

☞**Manual Transmission Oil Refill**

www.cargeek.ir

Differential Assembly

Remove

1. Raise the vehicle on an elevator.

Warning: Do not work on or under a vehicle supported only by a jack. Always support the vehicle on safety stands.

2. Drain the manual transmission oil.

☞ **Manual Transmission Oil Drain**

3. Remove the manual transmission assembly.

☞ **Manual Transmission Assembly Remove**

4. Explode the manual transmission assembly.

☞ **Manual Transmission Assembly Explode**

5. Pull out the inner ring of the tapered bearing with **T32001**, and take out the gasket.

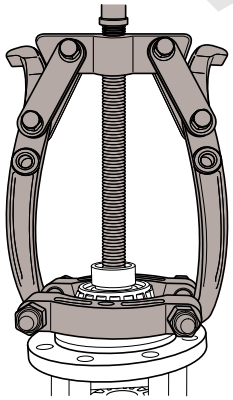

S1220146

6. Remove the planetary shaft pins with punching tools.

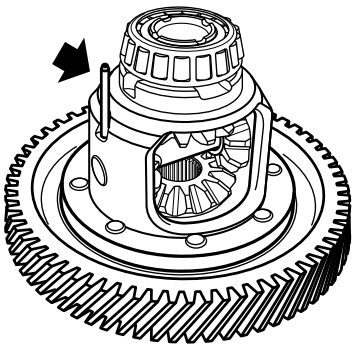

S1220147

7. Unscrew the bolts and remove the main deceleration driven gear.

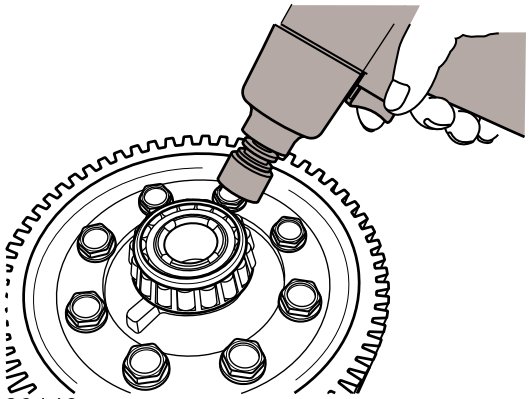

S1220148

8. Remove the planetary shaft, planetary gear, half shaft gear and gasket.

Refit

1. Fit the planet gear, axle shaft gear, planet gear gasket and axle shaft gear gasket.
2. Rotate the planet gear and axle shaft gear until the planet shaft holes of the planet gear and differential case are aligned.
3. Fit planetary shaft.
4. Fit planetary shaft pin.
5. Fit the driven gear of final drive, and tighten connecting bolts to **90–100Nm**.
6. Fit the conical bearing inner ring with **TPT00128**.
7. Check the thickness of adjusting gasket, and determine whether to replace it according to the check result.

0.95
1.00
1.05
1.10
1.15
1.20
1.25

8. Assemble manual transmission assembly.

☞ **Manual Transmission Assembly Assembling**

9. Fit the manual transmission assembly.

☞ **Manual Transmission Assembly Refit**

10. Fill the manual transmission oil.

☞ **Manual Transmission Oil Refill**

www.cargeek.ir

www.cargeek.ir

Transmission Accessories and Release Mechanism

Remove

1. Raise the vehicle on an elevator.

Warning: Do not work on or under a vehicle supported only by a jack. Always support the vehicle on safety stands.

2. Drain the manual transmission oil.

☞ **Manual Transmission Oil Drain**

3. Remove the manual transmission assembly.

☞ **Manual Transmission Assembly Remove**

4. Remove the bolts fixing the gear selection/shift cable bracket, and remove the gear selection/shift cable bracket.

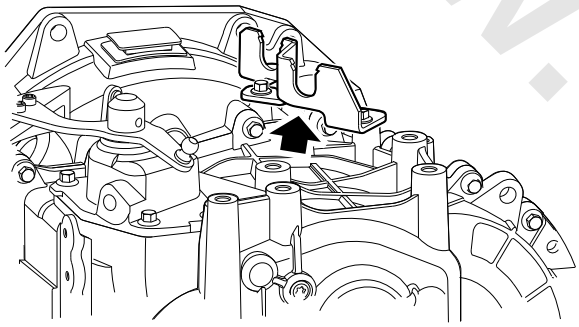

S1220158

5. Remove the plug on the control cover.

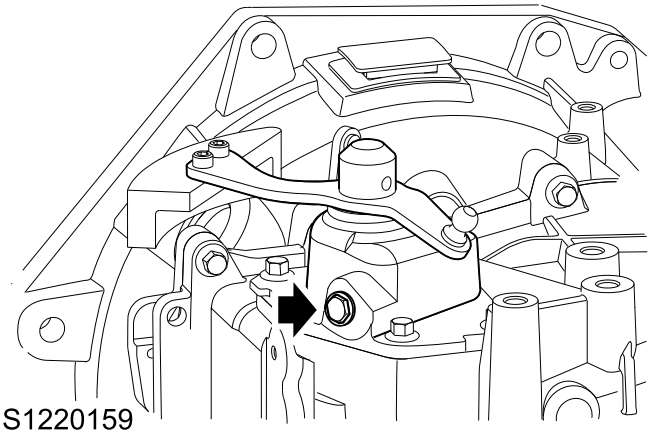

S1220159

6. Remove reverse lamp switch.

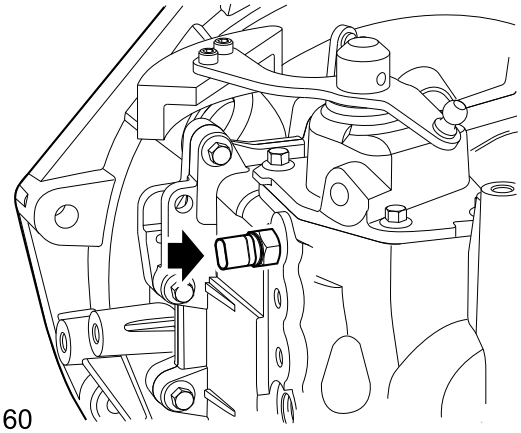

S1220160

7. Remove the interlock pin.

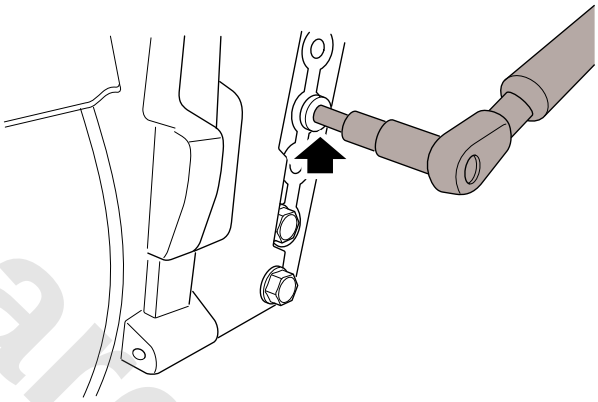

S1220100

8. Remove the set pin on the case.

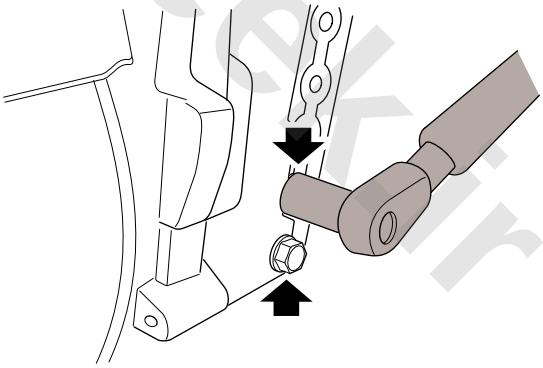

S1220101

9. Remove the bolts fixing the gear shift control mechanism, and remove the control mechanism assembly.

www.cargeek.ir

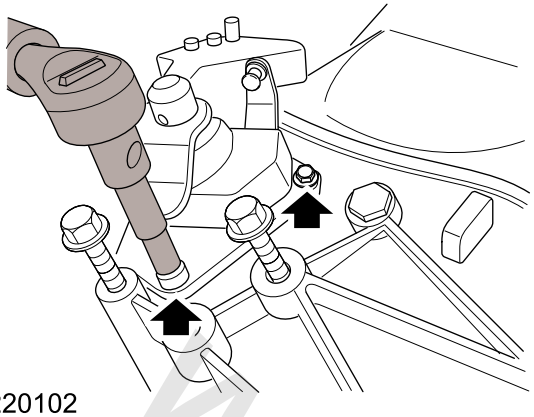

S1220102

10. Invert the transmission, and remove the central release cylinder and release bearing.

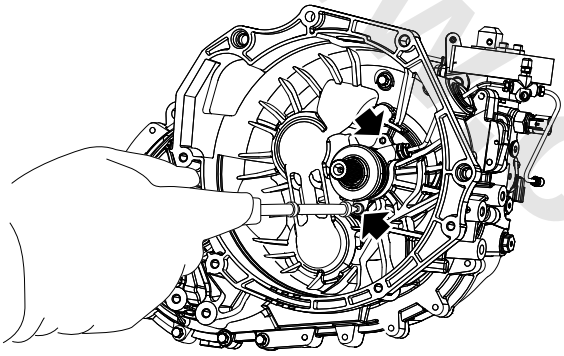

S9233100

11. Remove the oil filler plug and oil plug gasket.

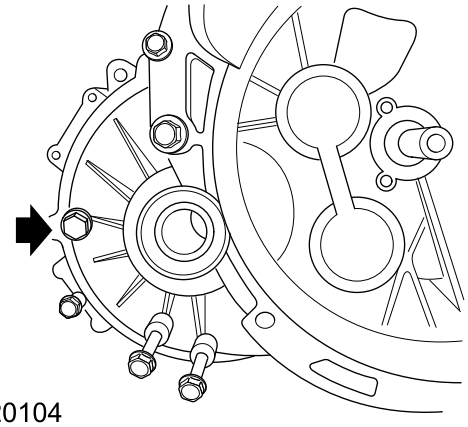

S1220104

12. Remove the oil drain plug and oil plug gasket.

Refit

1. Fit the oil filler plug and oil drain plug and oil plug gasket and tighten to **30–40Nm**.
2. Fit the central release cylinder and release bearing and tighten the bolts to **10–14Nm**.
3. Fit the shift control cover on the transmission case, and tighten bolts to **25–30Nm**.
4. Fit the set pins on the upper housing and tighten it.
5. Fit the interlock pin and tighten to **15–20Nm**.
6. Fit the reverse lamp switch and tighten to **23–27Nm**.
7. Fit the shift control cover oil plug, and tighten to **30–40Nm**.
8. Fit the gear selection/shift cable bracket and tighten the bolts to **19–25Nm**.
9. Fit the manual transmission assembly.

☞ **Manual Transmission Assembly Refit**

10. Fill the manual transmission oil.

☞ **Manual Transmission Oil Refill**

www.cargeek.ir

Input Shaft Assembly

Remove

1. Raise the vehicle on an elevator.

Warning: Do not work on or under a vehicle supported only by a jack. Always support the vehicle on safety stands.

2. Drain the manual transmission oil.

Manual Transmission Oil Drain

3. Remove the manual transmission assembly.

Manual Transmission Assembly Remove

4. Explode the manual transmission assembly.

Manual Transmission Assembly Explode

5. Remove and discard the locking bolt and rear bearing.

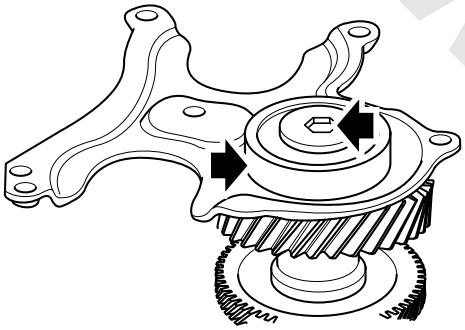

S1220112

6. Remove the rear bearing baffle.

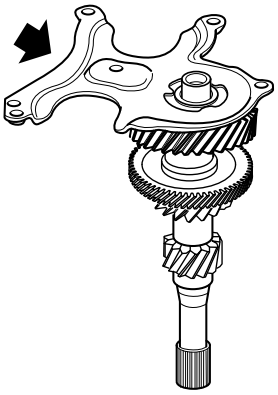

S1220113

7. Remove the input shaft 4th/6th gear.

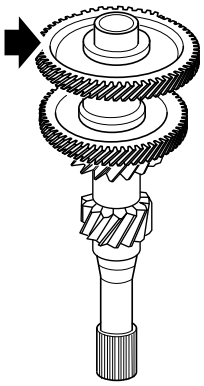

S1220114

8. Remove and discard the input shaft sleeve.

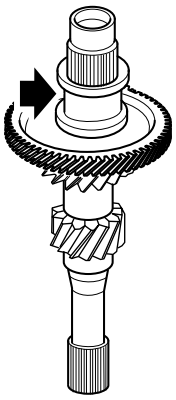

S1220115

9. Remove the input shaft 3rd/5th gear.

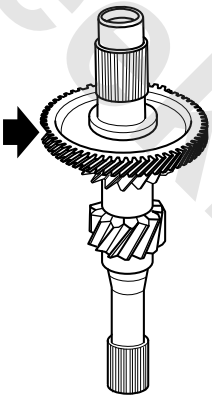

S1220116

10. Place the input shaft inverted, remove and discard the input shaft front bearing.

Refit

1. Fit new front bearing on the input shaft with **TPT00132**.

www.cargeek.ir

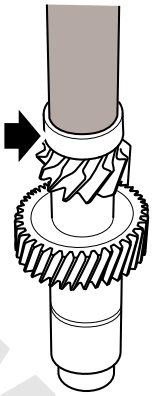

S1220117

2. Fit the input shaft 3rd/5th gear.
3. Fit the new input bearing bushing.
4. Fit the input shaft 4th/6th gear.
5. Fit the bearing baffle assembly.
6. Fit the new input shaft rear bearing.
7. Assemble manual transmission assembly.

Manual Transmission Assembly Assembling

8. Fit the manual transmission assembly.

Manual Transmission Assembly Refit

9. Fill the manual transmission oil.

Manual Transmission Oil Refill

Output Shaft Assembly 1

Remove

1. Raise the vehicle on an elevator.

Warning: Do not work on or under a vehicle supported only by a jack. Always support the vehicle on safety stands.

2. Drain the manual transmission oil.

Manual Transmission Oil Drain

3. Remove the manual transmission assembly.

Manual Transmission Assembly Remove

4. Explode the manual transmission assembly.

Manual Transmission Assembly Explode

5. Remove the locking bolt and the rear bearing of output shaft 1 and discard them.
6. Remove the output shaft 6th gear needle bearing inner ring with a puller.

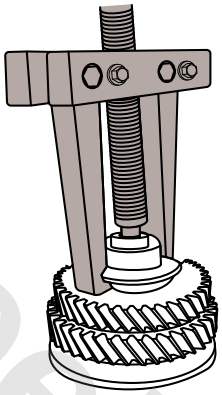

S1220118

7. Remove the output shaft 6th gear and needle bearing and discard them.

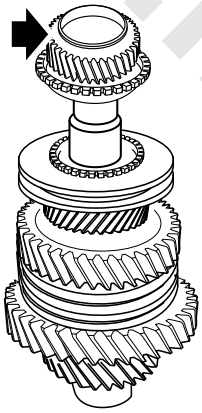

S1220119

8. Remove the output shaft 6th gear synchronizer gear ring and synchronizer gear bushing.

www.cargeek.ir

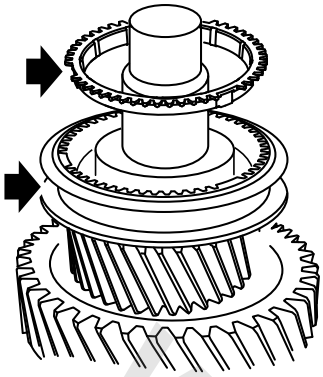

S1220120

9. Place the output shaft assembly 1 to the hydraulic press panel, and press downward on output shaft 1 with hydraulic press to separate the shaft from the gear set.

Refit

1. Fit the front bearing inner ring to output shaft 1 with **TPT00131**.

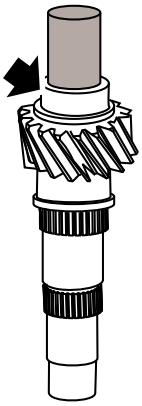

S1220122

2. Place the output shaft 1 inverted, use **TPT00134** to fit the 1st gear needle bearing inner ring to the output shaft 1.

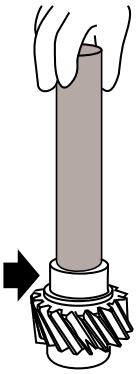

S1220123

3. Fit the new output shaft 1st gear needle bearing and 1st gear.

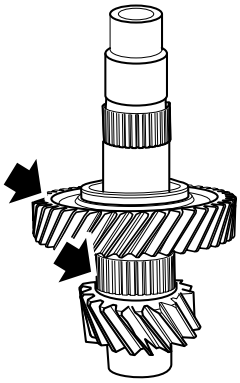

S1220124

4. Fit the output shaft 1st/2nd gear synchronizer assembly.

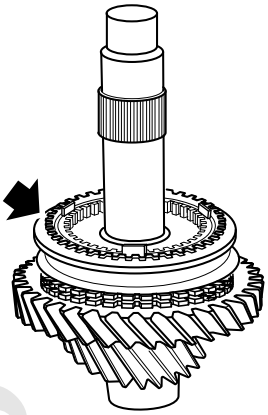

S1220125

5. Fit the output shaft 2nd gear spacer, new needle bearing and 2nd gear.

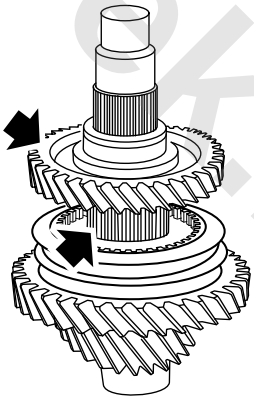

S1220126

6. Fit the 5th gear needle bearing inner ring to output shaft 1 with **TPT00132**.

www.cargeek.ir

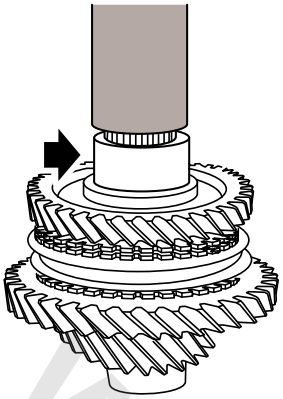

S1220127

7. Fit the new output shaft 5th gear needle bearing and 5th gear.

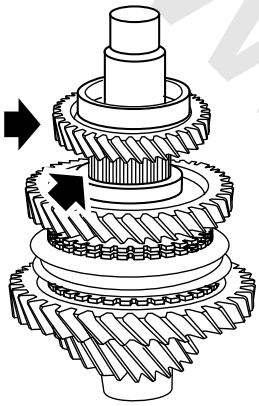

S1220128

8. Fit the output shaft 5th/6th gear synchronizer assembly.

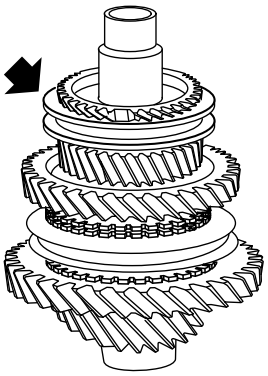

S1220129

9. Assemble the 6th gear needle bearing inner ring, the new needle bearing and the 6th gear together first; fit the 3 parts to output shaft 1 with **TPT00131**.

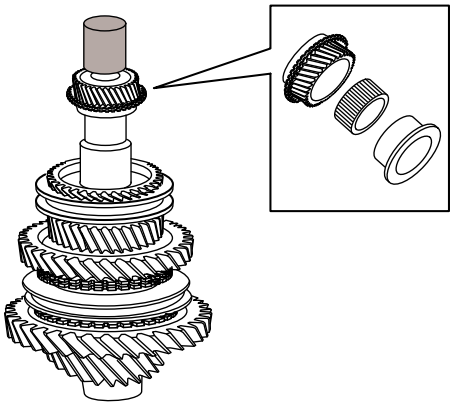

S1220130

10. Fit the new rear bearing on output shaft 1 with **TPT00132**.
11. Assemble manual transmission assembly.

☞ **Manual Transmission Assembly Assembling**

12. Fit the manual transmission assembly.

☞ **Manual Transmission Assembly Refit**

13. Fill the manual transmission oil.

☞ **Manual Transmission Oil Refill**

www.cargeek.ir

Output Shaft Assembly 2

Remove

1. Raise the vehicle on an elevator.

Warning: Do not work on or under a vehicle supported only by a jack. Always support the vehicle on safety stands.

2. Drain the manual transmission oil.

Manual Transmission Oil Drain

3. Remove the manual transmission assembly.

Manual Transmission Assembly Remove

4. Explode the manual transmission assembly.

Manual Transmission Assembly Explode

5. Remove the locking bolt and the rear bearing of output shaft 2 and discard them.
6. Remove the output shaft 4th gear needle bearing inner ring with a puller.
7. Remove the output shaft 4th gear and needle bearing and discard them.

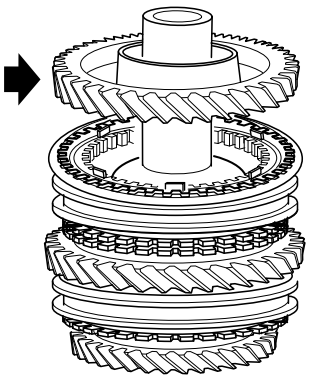

S1220132

8. Remove the output shaft 3rd/4th gear synchronizer assembly.

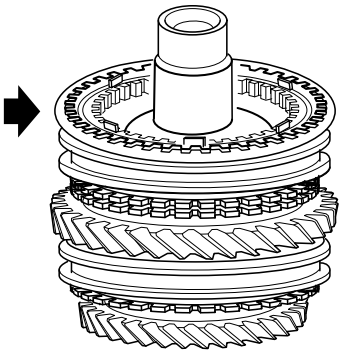

S1220133

9. Place the output shaft assembly 2 on the hydraulic press panel, and press downwards on output shaft 2 with hydraulic press to separate the shaft from the gear set.

Refit

1. Fit the front bearing inner ring to output shaft 2 with **TPT00131**.

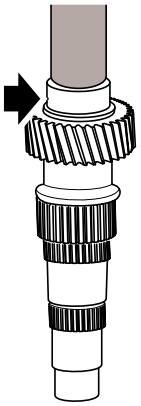

S1220135

2. Place output shaft 1 inverted, and fit a new output shaft reverse gear needle bearing and reverse gear.

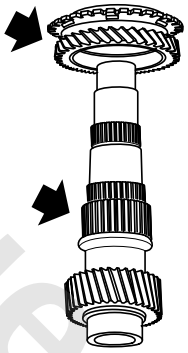

S1220136

3. Fit the reverse gear synchronizer assembly.

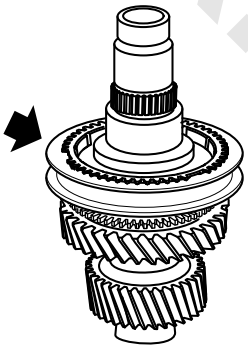

S1220137

4. Fit the 3rd gear needle bearing inner ring into output shaft 2 with **TPT00132**, and fit a new needle bearing.

www.cargeek.ir

www.cargeek.ir

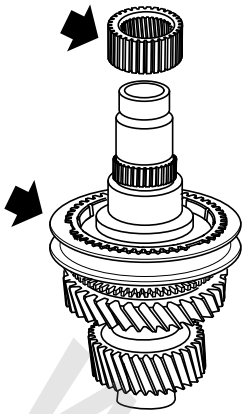

S1220138

5. Fit the output shaft 3rd gear.

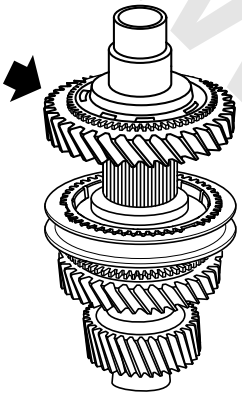

S1220139

6. Fit the output shaft 3rd/4th gear synchronizer assembly.

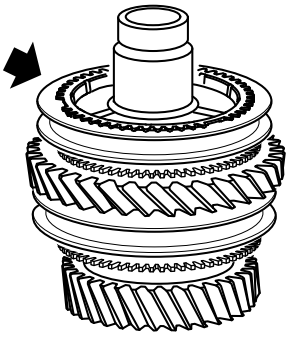

S1220140

7. Assemble the 4th gear needle bearing inner ring, the new needle bearing and the 4th gear together first; fit the 3 parts to output shaft 2 with **TPT00131**.

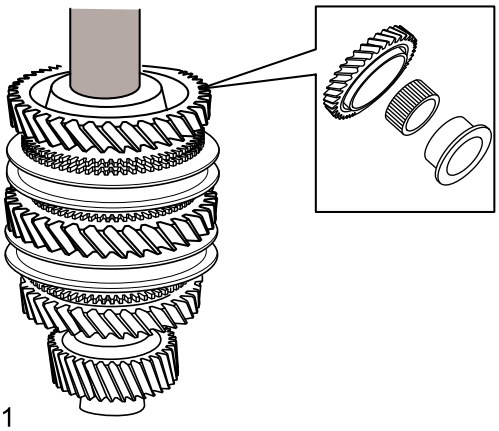

S1220141

8. Fit the new rear bearing on output shaft 2 with **TPT00132**.
9. Assemble the transmission assembly.

☞ **Transmission Assembly Assembling**

10. Fit the transmission assembly.

☞ **Transmission Assembly Fit**

11. Fill the transmission oil.

☞ **Transmission Oil Drain and Refill**

12. Assemble manual transmission assembly.

☞ **Manual Transmission Assembly Assembling**

13. Fit the manual transmission assembly.

☞ **Manual Transmission Assembly Refit**

14. Fill the manual transmission oil.

☞ **Manual Transmission Oil Refill**

www.cargeek.ir

Reverse Idler Shaft Assembly

Remove

1. Raise the vehicle on an elevator.

Warning: Do not work on or under a vehicle supported only by a jack. Always support the vehicle on safety stands.

2. Drain the manual transmission oil.

Manual Transmission Oil Drain

3. Remove the manual transmission assembly.

Manual Transmission Assembly Remove

4. Place the transmission inverted, and remove the rear case bearing cover plate bolts.

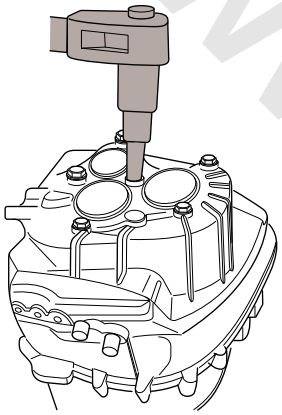

S1220162

5. Remove the housing connecting bolts.

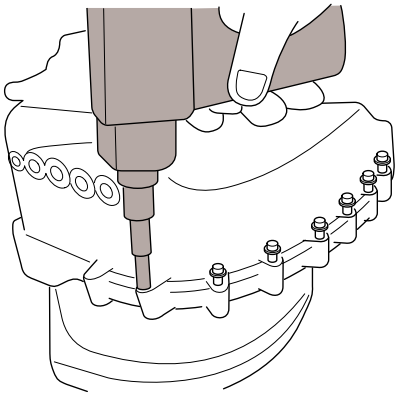

S1220105

6. Remove the housing reverse connecting bolts.

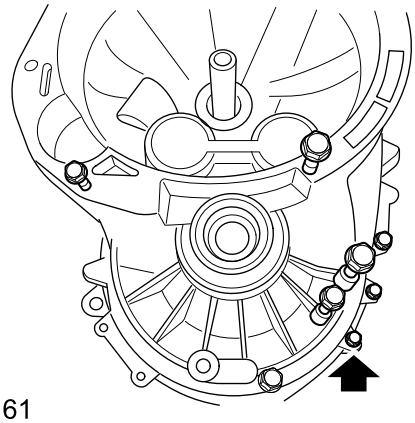

S1220161

7. Separate the transmission housing.

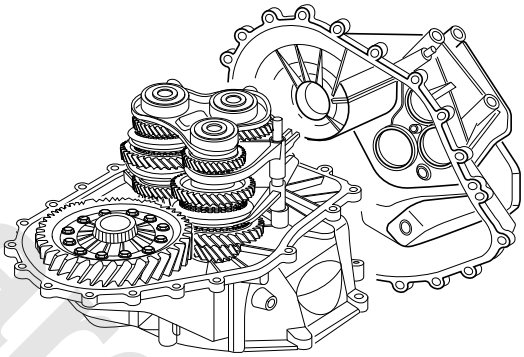

S1220163

8. Remove the bolts fixing the reverse idler gear shaft to the clutch housing.

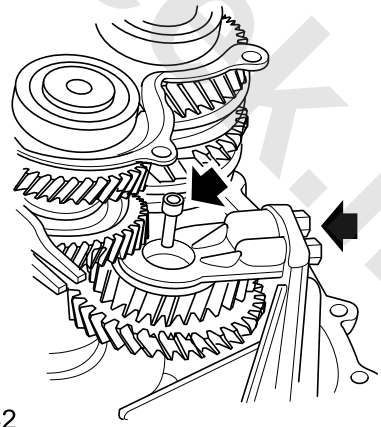

S1220142

9. Remove the reverse idler gear shaft, reverse gear, gasket, needle bearing and thrust bearing in sequence.

www.cargeek.ir

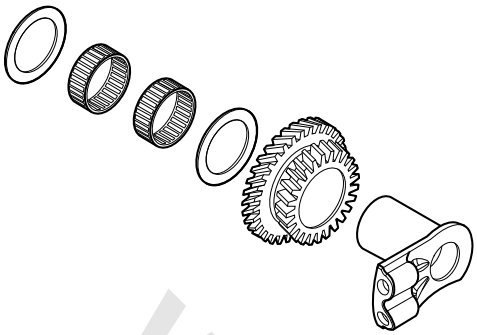

S1220143

Refit

1. Fit the thrust bearing, needle bearing, gasket, reverse gear and reverse idler shaft on the clutch housing in sequence.
2. Tighten the bolts in the reverse idler shaft hole to **23–27Nm**.
3. Tighten the bolts at the side of the reverse idler shaft to **33–37Nm** .
4. Apply sealant to the clutch housing. Assemble the transmission case together with the clutch housing with set pins.
5. Fit the case connecting bolts and tighten to **23–27Nm**.
6. Place the transmission inverted, fit the reverse connecting bolts of the case and tighten to **23–27Nm**.
7. Fit the bearing cover plate bolts and tighten to **25–30Nm**.
8. Fit the manual transmission assembly.

Manual Transmission Assembly Refit

9. Fill the manual transmission oil.

Manual Transmission Oil Refill

Neutral Position Sensor

Remove

1. Disconnect the battery negative cable.
2. Disconnect the connector from the neutral position sensor.
3. Loosen 1 bolt fixing the sensor to the transmission control seat and slowly remove the sensor by rotating it.

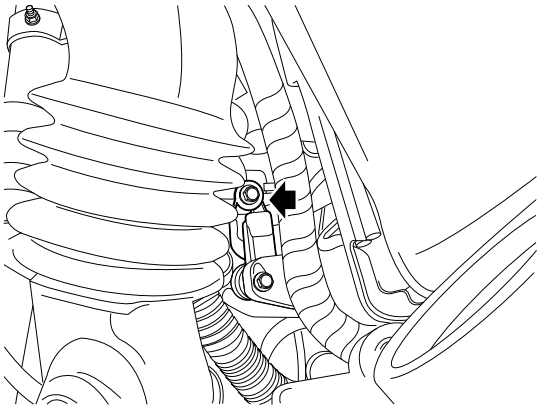

Refit

1. Clean the mating surface of the transmission.
2. Apply transmission oil to the O-ring of the neutral position sensor.
3. Press the neutral position sensor into the transmission control seat hole by hand and tighten the retaining screw to **8–12Nm**.

Caution: Do not refit the neutral position sensor by knocking.

4. Connect the sensor connector.
5. Connect the battery negative cable.

www.cargeek.ir

Special Tools

Tool Number	Description	Picture
T10007	Engine lift bracket	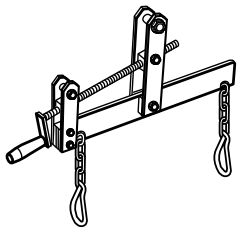 T10007
TEN00070	Engine support	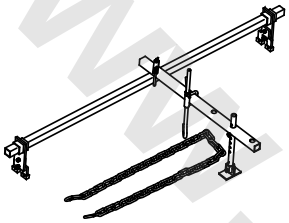 TEN00070
TPT00119	Replacer,needle roller bearing, shift and select shaft	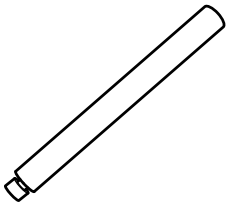 TPT00119
TPT00136	Supporter, shift and select shaft barrel	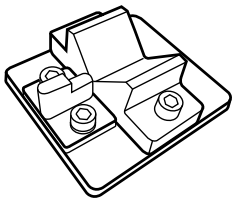 TPT00136
TPT00120	Replacer, oil seal, shift and select shaft	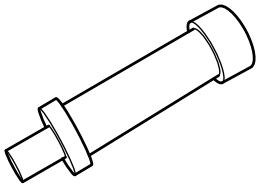 TPT00120

Tool Number	Description	Picture
TPT00121	Replacer, oil seal, select shaft	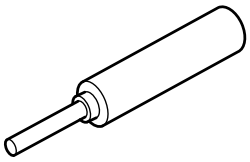 TPT00121
TPT00124	Replacer, bush, shift and select shaft	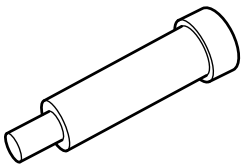 TPT00124
TPT00122	Replacer, outer bush, select shaft	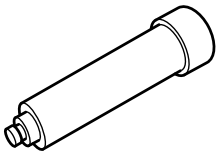 TPT00122
TPT00131	Replacer, inner bush, select shaft	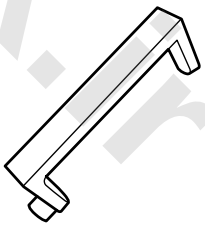 TPT00131
TPT00130	Replacer, oil seal, drive shaft	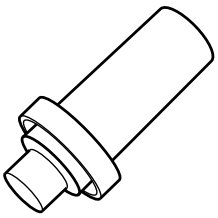 TPT00130

www.cargeek.ir

Tool Number	Description	Picture
TPT00128	Replacer, outer track of tapered roller bearing,differential	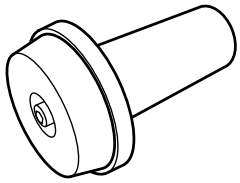 TPT00128
TPT00127	Replacer, oil seal, input shaft	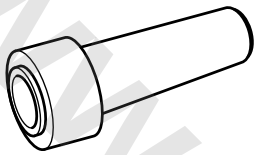 TPT00127
TPT00138	Replacer, bearing, shift and select shaft	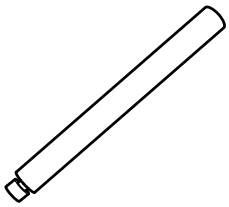 TPT00138
TPT00123	Replacer, bush , selector fork	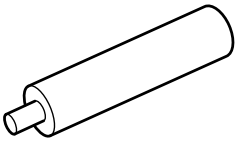 TPT00123
TPT00126	Sleeve, lock bolt, shaft	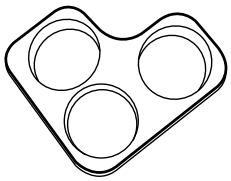 TPT00126

Tool Number	Description	Picture
T32001	Puller universal	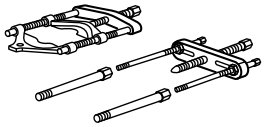 T32001
TPT00132	Replacer, inner track of bearing, output shaft	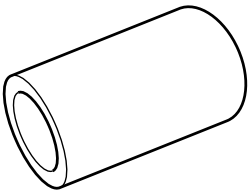 TPT00132
TPT00134	Replacer, rear ball bearing and inner track of roller bearing	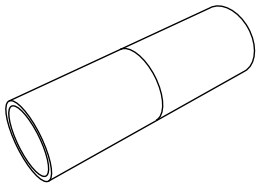 TPT00134

www.cargeek.ir

Cluth-6MT

Specifications

Torque

Description	Value
Bolt - clutch cover to flywheel	25Nm
Bolt - clutch slave cylinder	7–10Nm
Bolt - clutch hose bracket	7–10Nm
Nut - concentric slave cylinder hose to pipe	15–19Nm
Breath plug	10Nm

www.cargeek.ir

www.cargeek.ir

Parameter

Model	Dry Single Disc, Hydraulic Booster Clutch
Diameter of driven plate:	240mm
Diameter of pressure plate	240mm
Thickness of driven plate: New Service limit	 7.3—7.9mm 6.5mm
Depth of rivet: New Service limit	 1.2mm (above the rivet head) 0.2mm (above the rivet head)
Wear loss of driven plate: New	 0.8mm

www.cargeek.ir

www.cargeek.ir

Description and Operation

System Layout

Clutch System Layout

1. Clutch Master Cylinder
2. Clamp - Brake Fluid Reservoir Hose
3. Clutch Master Cylinder Hose
4. Clip - Clutch Hard Pipeline
5. Clutch Master Cylinder Pipeline Assembly Bracket
6. Bolt - Clutch Master Cylinder Pipeline Assembly Bracket
7. Clutch Hard Pipeline
8. Clutch Hose Bracket
9. Clamp - Clutch Hose
10. Bolt - Clutch Hose Bracket
11. Manual Transmission
12. Central Release Cylinder Pipeline Assembly
13. Plug - Central Release Cylinder Pipeline Assembly
14. Rubber Plug
15. Central Release Cylinder
16. Bolt - Central Release Cylinder
17. Bolt - Clutch Cover Assembly
18. Clutch Cover Assembly
19. Driven Plate

www.cargeek.ir

www.cargeek.ir

Description

Overview

This is a three-piece diaphragm clutch with self-adjusting function, equipped with a hydraulic clutch release system. This system consists of two main parts, a master cylinder and a central release cylinder.

Clutch Hydraulic System

The master cylinder of the clutch is directly fitted on the pedal box in the passenger compartment, and the push rod is fixed to the clutch pedal box by master cylinder fastening clips.

The clutch pipeline is connected to the master cylinder with a rotary connector, and this kind of connector is useful for refit and adjustment. The other end of the pipeline is connected to the central release cylinder with quick connector. The pipeline is of a flexible type for easy refit and also can buffer the replacement and vibration generated by the engine.

The cylinder connecting piece fitted on the manual transmission case, and the central release cylinder coaxial with the transmission input shaft form a release mechanism, the clutch pipeline from the cylinder connecting piece is connected to the pipeline of the master cylinder through the quick connector.

Clutch Mechanical System

The vehicle with manual transmission is equipped with double mass flywheel. The clutch cover assembly is fitted on the flywheel with three locating pins and is fixed with six bolts.

Clutch Cover Assembly

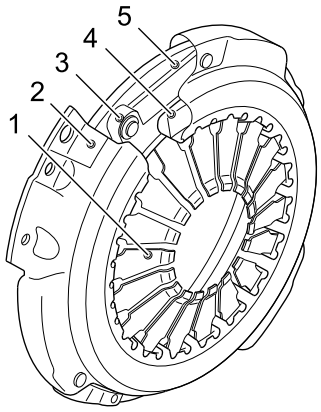

S222002

1. Diaphragm spring
2. Clutch cover
3. Pressure plate
4. Support ring
5. Leaf spring

The clutch cover assembly is composed of the diaphragm spring, pressure plate and cover. The pressure plate is made of cast iron and has a smooth plane machined to connect the driven plate. There are 3 pull rings on the outer ring of the pressure plate, which is then connected to the housing through a spring. The spring is composed of three quenched and tempered steel sheets. When the clutch pedal is depressed, it will pull the pressure plate away from the driven plate. Clutch housing is punched by steal plate.

The diaphragm spring is a cast ring with 18 release fingers in its inner ring. There are two round support rings fitted on the housing so that the diaphragm spring can rotate between them. The diaphragm spring is not directly connected to the pressure plate. When the release bearing applies stress on the release finger of the diaphragm spring, the diaphragm spring will rotate around the support ring to leave the pressure plate. And meanwhile, the spring of the pressure plate connected to the housing will also be away from the driven plate.

Driven Plate

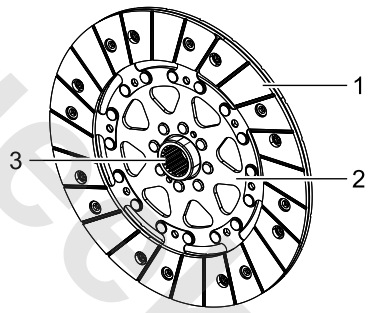

S9231001

1. Driven plate body
2. Friction plate
3. Spline hub

The driven plate is fitted between the flywheel and the pressure plate. Its feature is that the spline hub engages the spline on the transmission input shaft. The friction plate is composed of two discs, which are riveted on each side of the driven plate body. The rivets are fitted in the notches in the friction plate as well as that at the other side to protect the pressure plate and flywheel from damage.

www.cargeek.ir

Clutch Master Cylinder Sensor

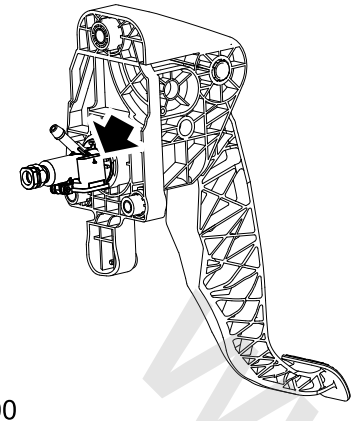

S9231000

The clutch master cylinder sensor is fitted to the master cylinder for detecting the position of the clutch master cylinder piston.

Fit a permanent magnet to the clutch master cylinder piston. The magnet produces different magnetic field strength for different sensor varied with the piston motion.

According to the different working states of the clutch master cylinder, the sensor shall output at most 3 signals:\

- Digital signal: Clutch top-position switch, applied to the constant speed cruise system.
- **PWM**Signal: Apply to supply the electronic parking brake
- Digital signal: Clutch bottom-position switch, applied to supply the engine Stop/Start system

For the engine Stop/Start system (Such as equipments), clutch bottom-position switch relative to clutch top-position switch and **PWM** signal is independent and used to redundancy check.

www.cargeek.ir

www.cargeek.ir

Operation

Hydraulic Operation

When the clutch pedal is depressed, the piston moves in the master cylinder. The piston drives the fluid in the master cylinder to move along the clutch pipeline. This pressure is applied on the piston of the central release cylinder and the piston will move under the action of hydraulic pressure.

When the clutch pedal is released, the release finger of the diaphragm spring returns to its original position, which pushes the fluid in the central release cylinder to flow back, allowing the master cylinder piston to return to its original position.

Mechanical Operation

When the clutch pedal is depressed, the push rod pushes the piston to move. The pressure produced by the piston motion is transferred to the central release cylinder, the central release cylinder pushes the release finger of the diaphragm spring, and the diaphragm spring will rotate around the support ring on the pressure plate housing. Following the deformation of the diaphragm spring, its pressure on the pressure plate will disappear. Three leaf springs will pull the pressure plate away from the driven plate.

Disappearance of the pressure on the driven plate applied by the pressure plate reduces the frictional force between the driven plate and flywheel. The driven plate will skid on the flywheel and can not transmit the power of the flywheel to the transmission input shaft.

When the clutch pedal is released, the stress on the central release cylinder will disappear. Disappearance of this pressure allows the diaphragm spring to return to its original position, the release finger goes back to its original position, pushing the fluid back to the master cylinder from the central release cylinder.

The diaphragm spring rotates around the support ring on the pressure plate housing, and applies pressure on the pressure plate, and the pressure plate will overcome the resistance of the leaf spring, move towards the flywheel and apply stress on the driven plate.

The pressure on the driven plate applied by the pressure plate increases the frictional force between the driven plate and flywheel. When the clutch pedal is released, the frictional force will increase, the rotational motion of flywheel is transmitted to the driven plate, and then it is transferred to the transmission input shaft.

When the pedal is fully released, the force on the pressure plate applied by the diaphragm spring will press the driven plate on the flywheel, making no skidding between them.

Clutch Master Cylinder Sensor

The clutch master cylinder sensor mainly supply 2 switch signal:

- Clutch top-position switch (CTS) signal:

  When the clutch pedal is depressed, the clutch starts to work. The clutch position sensor supply a clutch high-position switch (CTS) signal for EMS; the signal applies to the constant speed cruise; its travel is 3–7mm (From the top).

- Clutch bottom-position switch (CBS) signal:

  When the clutch pedal achieves the maximum travel, the clutch disengages completely. The clutch position sensor supply a CBS signal for the BCM; this signal will be used by the stop/start system; its travel is 19-25mm (From the top).

www.cargeek.ir

www.cargeek.ir

Service Procedures

Clutch Assembly

Remove

1. Remove the manual transmission assembly.

☞ **Manual Transmission Assembly Remove**

2. Restrict the flywheel with **T10028**.

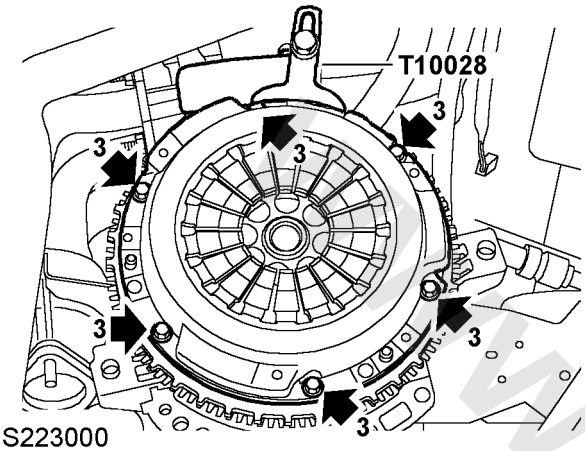

S223000

3. Gradually loosen and remove 6 bolts fixing the clutch cover assembly to the flywheel.
4. Remove the clutch housing assembly and take out the driven plate.

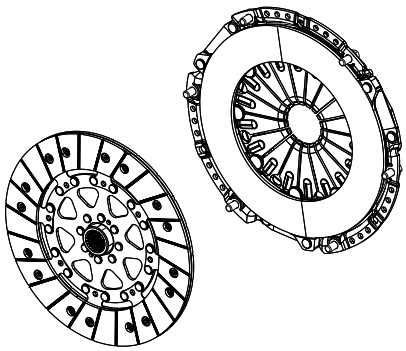

S9233001

Refit

1. Visually check the diaphragm finger for wear or irregular height.
2. Check the clutch driven plate for any sign of wear or oil contamination. Replace the driven plate if necessary.
3. Measure the thickness of clutch plate, replace driven plate if the thickness is less than the service limit.

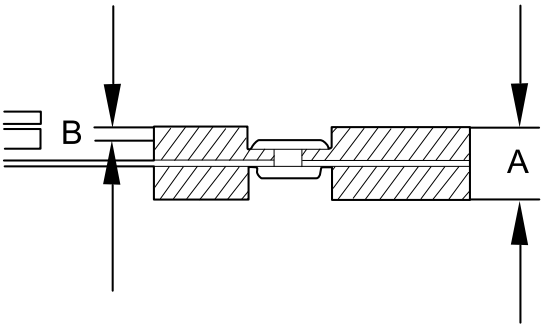

S223003

Thickness of driven plate (compressed) A

New driven plate	7.3mm
Service limit value	6.5mm

4. Measure the depth of rivets, replace driven plate if the depth is less than the service limit.

Depth of rivet B

New driven plate	1.2mm
Service limit value	0.2mm

5. Check the pressure plate for any sign of wear or damage. Check the drive plate for any sign of overheat (with color from deep yellow to blue) and replace it if necessary.

Caution: Renew a clutch pressure plate which has been accidentally dropped.

6. Check the surface levelness of pressure plate at 4 separate points with a square edge gauge and feeler gauge. Replace the pressure plate if deformation exceeds the service limit value.

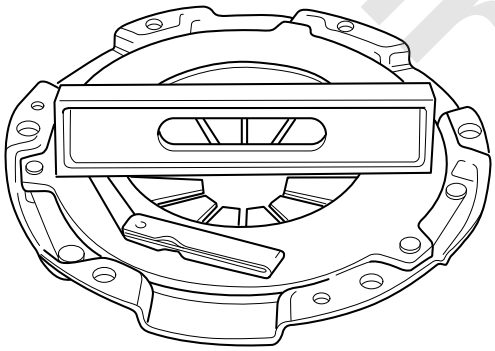

S223004

Deformation of pressure plate

Service limit	0.15mm

7. Check the central release cylinder for any sign of wear or damage and replace it if necessary.

www.cargeek.ir

8. Clean the pressure plate, flywheel, locating pins and pin holes.
9. Check the flywheel for any sign of scratch or other damages. Replace it if it is scratched or damaged.

Refit

1. Lubricate the central release cylinder with designated lubricating grease.
2. Apply specified lubricating grease to the spline of the clutch driven plate.
3. When fixing the driven plate to the pressure plate, pay attention to the refit direction.
4. Align the driven plate with the pressure plate with **T22001**.

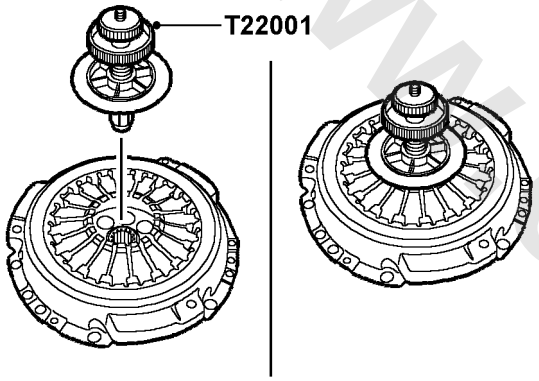

S223006

5. Make sure that the driven plate is aligned with the center of the pressure plate.

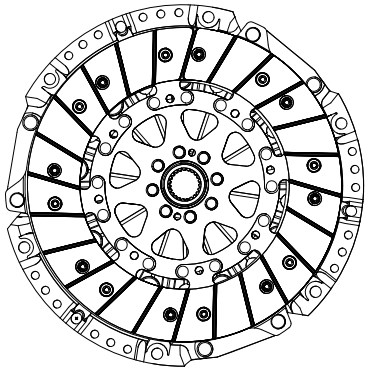

S9223102

6. Fit the clutch assembly into the flywheel with **T22001**.

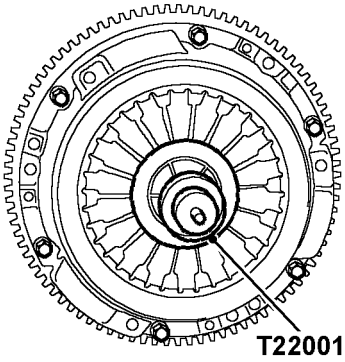

S223008

7. Fit 6 bolts fixing the pressure plate to the flywheel and screw them manually.
8. Lock the flywheel with **T10028** and tighten the bolts gradually to **25Nm** in diagonal sequence.
9. Remove the aligning tool **T22001** for the driven plate.
10. Fit the manual transmission assembly.

☞ **Manual Transmission Assembly Refit**

www.cargeek.ir

Clutch Central Release Cylinder

Remove

1. Drain brake fluid from the brake fluid reservoir.

Caution: Brake fluid will damage paint finished surfaces. If spilled, immediately remove fluid and clean area with water.

2. Loosen the hose clips, and unscrew the retaining bolts fixing the hose to the release cylinder pipeline assembly.
3. Unscrew the bolt fixing the release cylinder pipeline assembly to the transmission case.
4. Remove the manual transmission assembly.

Manual Transmission Assembly Remove

5. Disconnect the release cylinder pipeline assembly to the central release cylinder quick connector and remove the release cylinder pipeline assembly.
6. Remove the bolts fixing the central release cylinder to the transmission case, and take off the central release cylinder.

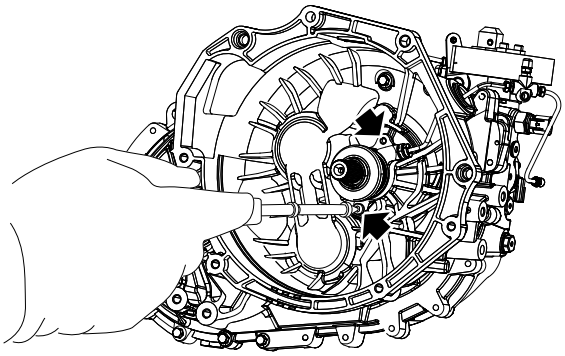

S9233100

Refit

1. Fix the central release cylinder to the manual transmission case, and tighten the nuts to **7–10Nm**.
2. Fit the central release cylinder pipeline assembly to the central release cylinder quick connector and fasten.

Caution: *Before refit, carefully check the seal ring of the quick connector and confirm that the seal ring is in good condition and fitted correctly. Before install, please ensure the gasket of quick joint is all right.*

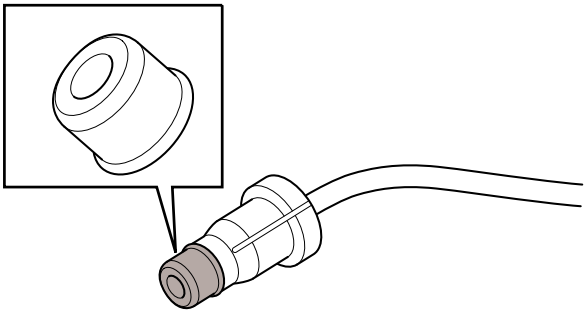

S922009

3. Fit the manual transmission assembly.

Manual Transmission Assembly Refit

4. Fix the central release cylinder pipeline bracket to the transmission case, and tighten bolts to **7–10Nm**.
5. Connect the central release cylinder pipeline assembly and hose, and tighten bolts to **15–19Nm**, and then tighten with hose clips.
6. Refill brake fluid to the MAX mark.
7. Bleed the clutch pipeline system.

Clutch Pipeline System Bleeding

www.cargeek.ir

www.cargeek.ir

Clutch Pipeline System Bleeding

Bleeding

Bleed the air that enters into hydraulic system when disconnecting the pipeline for repair. During the air bleeding, the brake fluid in the brake fluid reservoir must be maintained between MIN and MAX mark.

Warning: Do not allow brake fluid to come into contact with eyes or skin.

Caution: Do not reuse the brake fluid drained from the clutch pipeline system.

1. Unscrew the bleed plug dust cover from the cylinder connector. Connect a plastic hose to the bleed plug, and insert the other end of the hose into the glass container half-filled with fresh brake fluid.

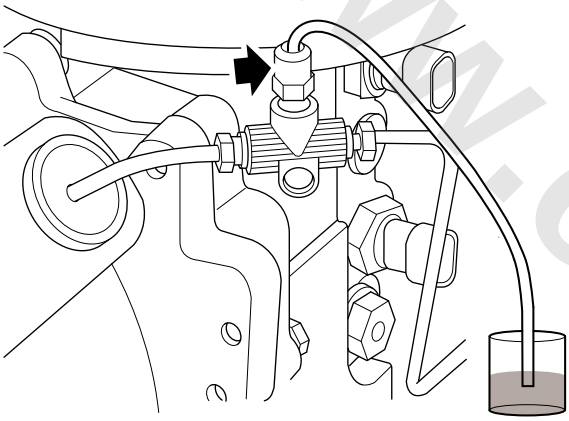

2. Press the clutch pedal to the maximum stroke and hold, so as to ensure the maximum system pressure.
3. Loosen the bleed plug, remove the air in the fluid, the system pressure will drop at this time.
4. Tighten the bleed plug firstly to avoid the suck-back of the fluid.
5. Release the brake pedal to the maximum stroke steadily, allowing it return to its original position without any external force. Supplement with sufficient brake fluid.
6. Repeat the operation in the above sequence for several times until the brake fluid without any air flows into the container, then fix the brake pedal to the maximum stroke, tighten the bleed plug to **10Nm**.
7. Remove the hose from the bleed plug, and fit the bleed plug anti-dust cover.
8. Refill brake fluid to the MAX mark.

Clutch Master Cylinder

Remove

1. Drain brake fluid from the brake fluid reservoir.

Note: Brake fluid will damage painted surfaces. Soak up any spillage with an absorbent cloth immediately and wash the area with a mixture of car shampoo and water.

2. Loose the clamp, disconnect the clutch master cylinder pipeline from the reservoir.

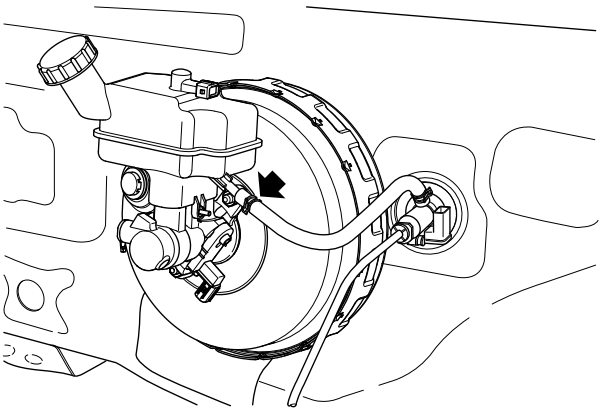

S9233102

3. Remove the fixing pin, disconnect the master from the hard pipe.

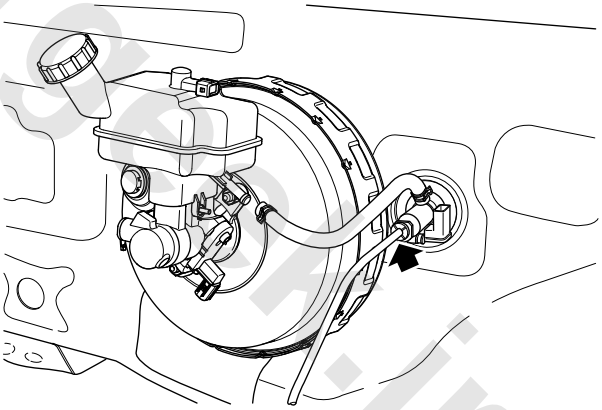

S9233101

4. Remove the lower closing plate of the driver side instrument panel.

☞**Driver Instrument Panel Lower Closing Panel Remove**

5. Release the fixing clamp of the master cylinder push rod from the clutch pedal and disconnect the connection.

www.cargeek.ir

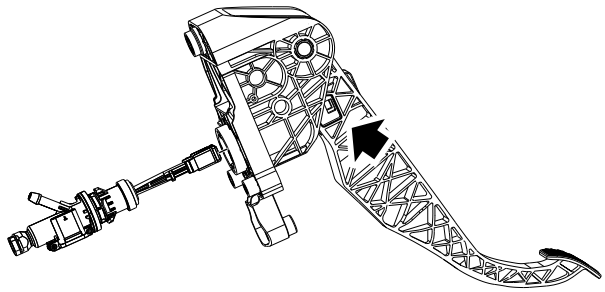

S2413081

6. Disconnect the master cylinder position sensor connector.
7. Remove the clutch master cylinder front the dash panel.

Refit

1. Connect the clutch master cylinder position sensor.
2. Locate the master cylinder to the dash panel and make sure the seal ring is fitted in place.
3. Fix the master cylinder push rod to the clutch pedal.
4. Connect the master with hard pipe, and fix it with lock pin.
5. Fit the driver instrument panel lower closing panel

☞**Driver Instrument Panel Lower Closing Panel Refit**

6. Connect the clutch master cylinder hose with the fluid reservoir, and fix it with clamp.
7. Bleed the clutch pipeline system.

☞**Clutch Pipeline System Bleeding**

8. Refill brake fluid into the reservoir up to the MAX mark.

www.cargeek.ir

www.cargeek.ir

Special Tools

Tool Number	Description	Picture
T10028	Flywheel locking tool	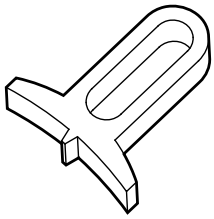 T10028
T22001	Aligner, clutch plate	T22001

www.cargeek.ir

www.cargeek.ir

Power Transfer Unit -AWD

Specifications

Torque

Description	Value
Bolt -PTU to transmission	70–80Nm
Bolt -PTU bracket to engine	42–48Nm
Bolt -PTU bracket to PTU	42–48Nm
Bolt -intermediate driving shaft to PTU	26–34Nm
Drain plug-PTU	29–34Nm
Filler plug-PTU	29–34Nm

www.cargeek.ir

www.cargeek.ir

www.cargeek.ir

Parameters

Description	PTU Assembly
Overall length	375mm
Total Width	228mm
Total Height	270mm
Weight (with oil)	19.9Kg
Speed Ratio	2.224
Lubricant Model	Idemitsu Apolloil Wide Gear LW 80W-90 GL5
Maximum Output Torque	1,000Nm

www.cargeek.ir

www.cargeek.ir

Description and Operation

System Layout

PTU Assembly

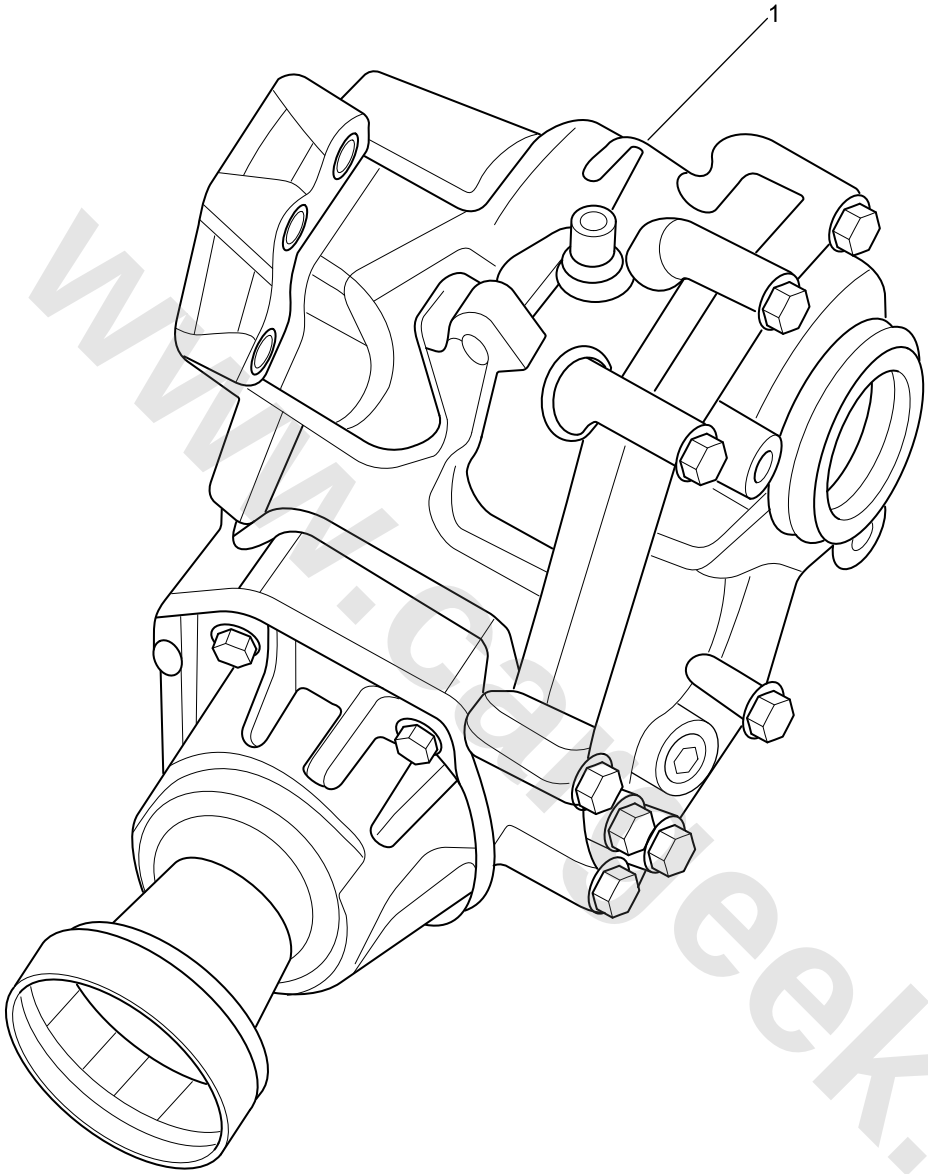

S1230001

1. PTU Assembly

www.cargeek.ir

www.cargeek.ir

PTU Assembly Accessory Drawing

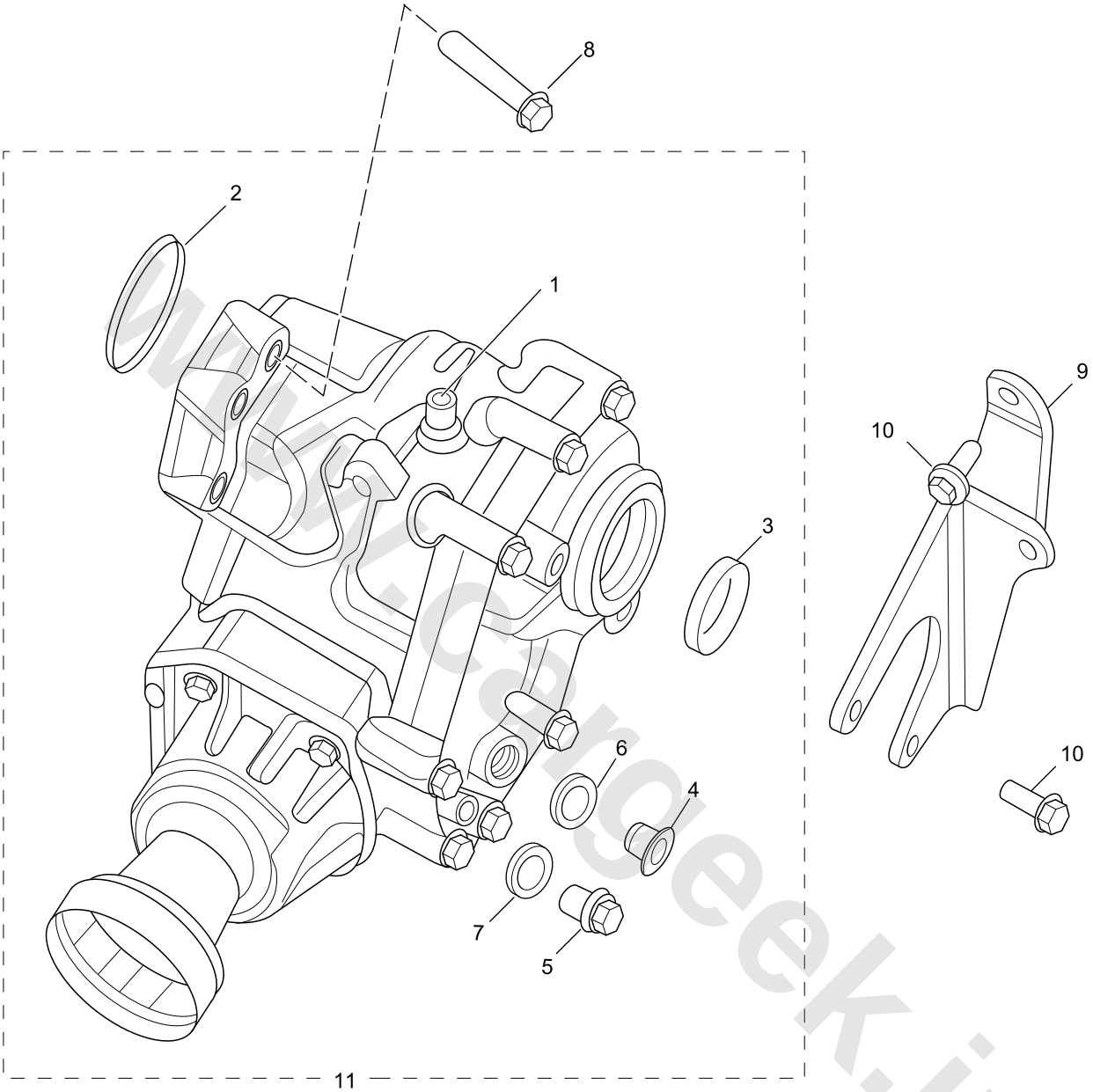

S1230002

1. Breather Plug
2. O Ring - PTU
3. Oil Seal - Right Front Axle Shaft
4. Drain Plug
5. Oil Filler Plug
6. Drain Plug Gasket
7. Filler Plug Gasket
8. Bolt - PTU to Transmission
9. Bracket - PTU
10. Bolt - PTU Bracket
11. PTU Assembly

www.cargeek.ir

www.cargeek.ir

Description

Overview of Power Transfer Unit Assembly

The function of the power transfer unit (**PTU**) is to take part of torque from the transmission differential housing through the spline and accelerate and steer the torque (90°) by the two-stage gear in the **PTU**, by this way, it transfers the torque to the intermediate drive shaft.

PTU Assembly Cutaway View

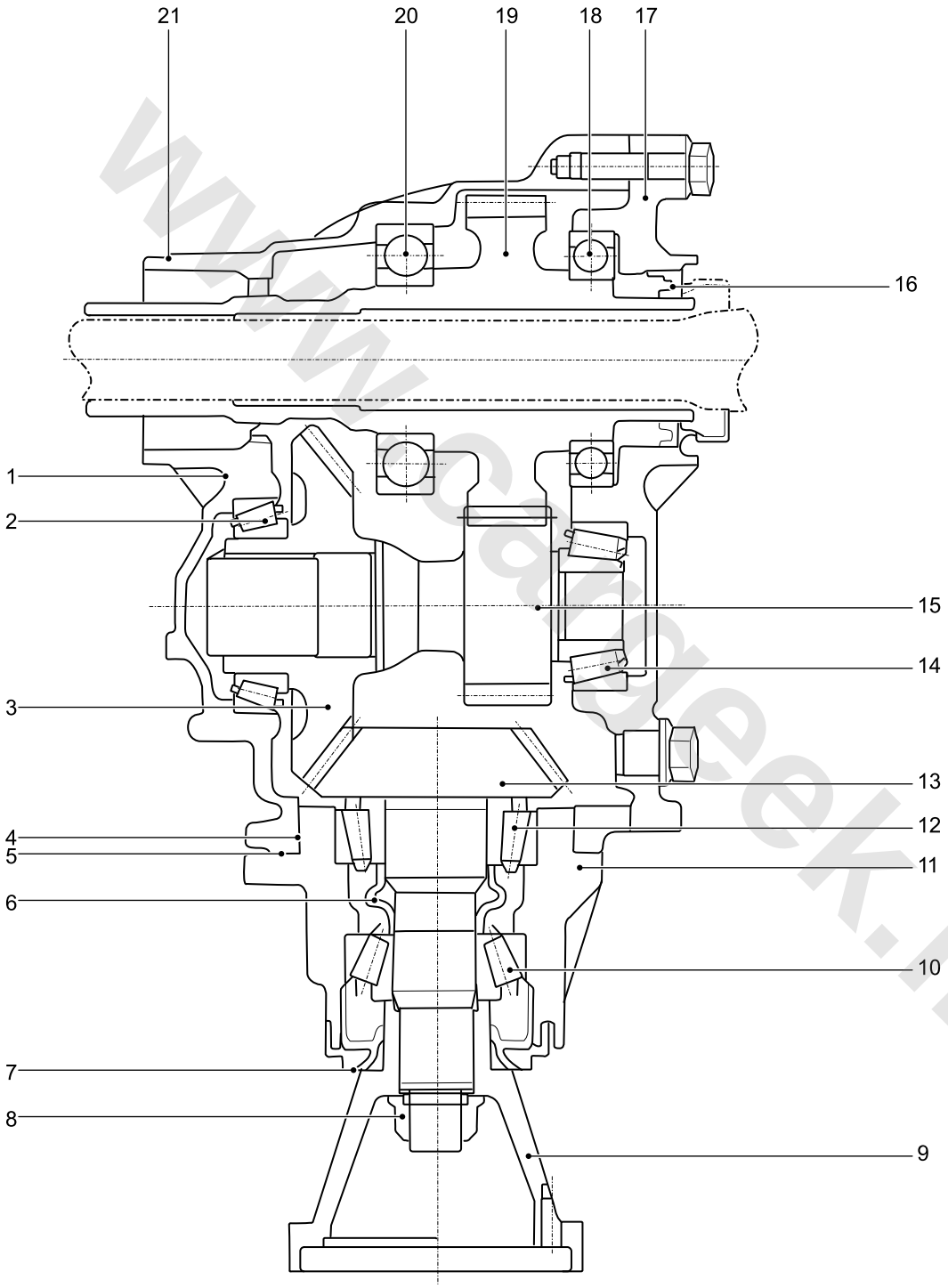

S1230003

1. Housing
2. Bearing 1 - Intermediate Gear
3. Hyperbolic Gear (large)
4. O-ring
5. Gasket
6. Adjusting Socket
7. Oil Seal
8. Lock Nut

www.cargeek.ir

9. Output Flange
10. Bearing 1 - Output Shaft
11. Housing Socket
12. Bearing 2 - Output Shaft
13. Hyperbolic Gear (small)
14. Bearing 2 - Intermediate Gear
15. Intermediate Gear
16. Oil Seal
17. Housing
18. Bearing 1 - Input Shaft
19. Input Gear
20. Bearing 2 - Input Shaft
21. O-ring

The power transfer unit assembly consists of the housing, housing cover, housing sleeve, input gear, intermediate gear, hyperbolic gear (large), hyperbolic gear (small), output flange, bearing and oil seal, etc. The input shaft connects the transmission differential housing, which drives the drive half shaft of the right front wheel to rotate. The input gear engages the intermediate gear and drives the hyperbolic gear (large) to rotate. The intermediate gear rotation and the drive half shaft of the right front wheel rotate towards opposite direction. The hyperbolic gear combination changes the rotation direction (90°) and transfers the torque. The hyperbolic gear (small) transfers the power to the drive shaft through the output flange.

www.cargeek.ir

www.cargeek.ir

Operation

PTU Assembly Power Flow

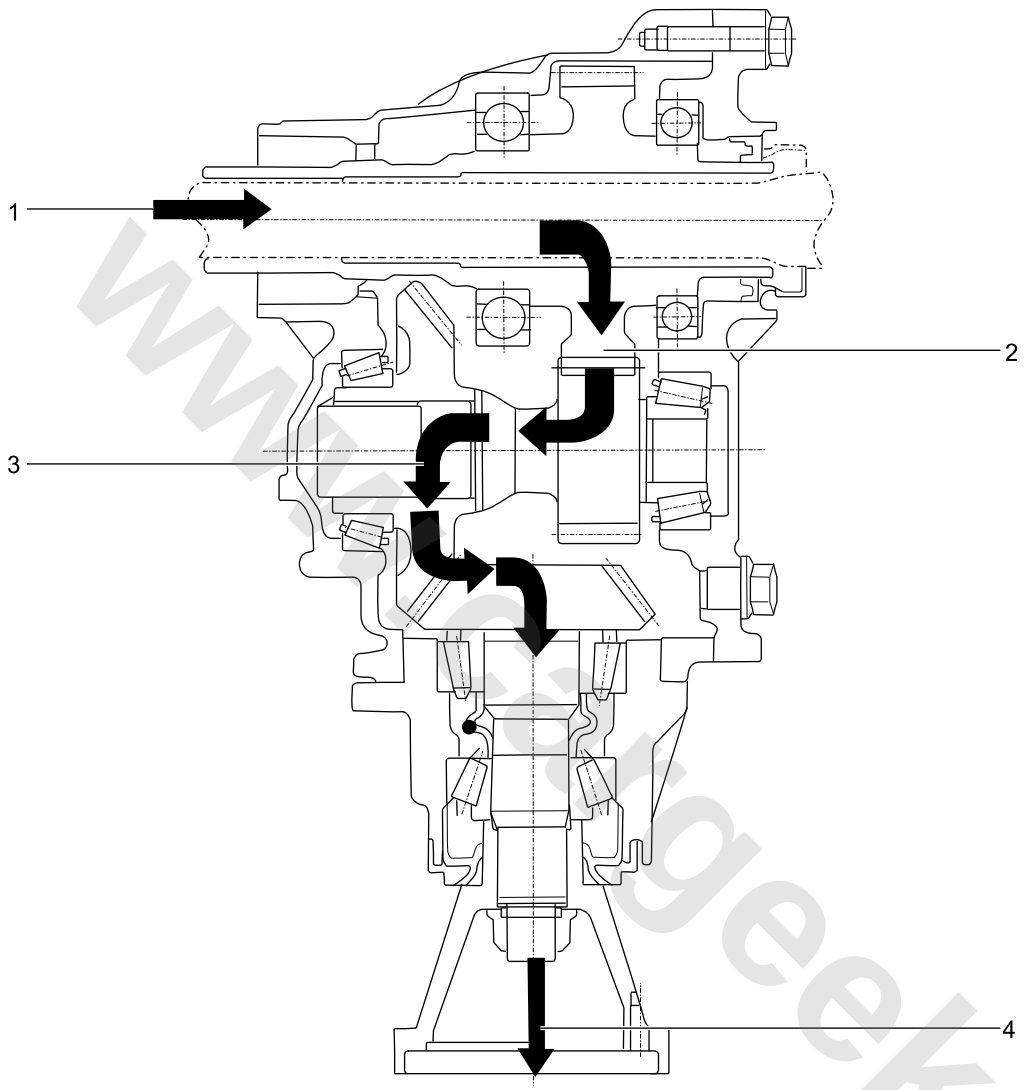

S1230004

1. Torque is input from the differential housing spline of the transmission.
2. Primary Gear Acceleration
3. Secondary Hyperbolic Gear Acceleration and 90°Steering
4. 扭矩经法兰输出

www.cargeek.ir

www.cargeek.ir

Service Procedures

PTU Assembly

Remove

1. Raise the vehicle on a lift.

Warning: Do not work on or under a vehicle supported only by a jack. Always support the vehicle on safety stands.

2. Drain the transmission fluid.

☞**Dual Clutch Automatic Transmission Fluid - Drain**

3. Remove the axle shaft of the right front wheels.

☞**Right Front Wheel Axle Shaft Remove**

4. Remove 6 bolts connecting the PTU and the drive shaft to disconnect the drive shaft.

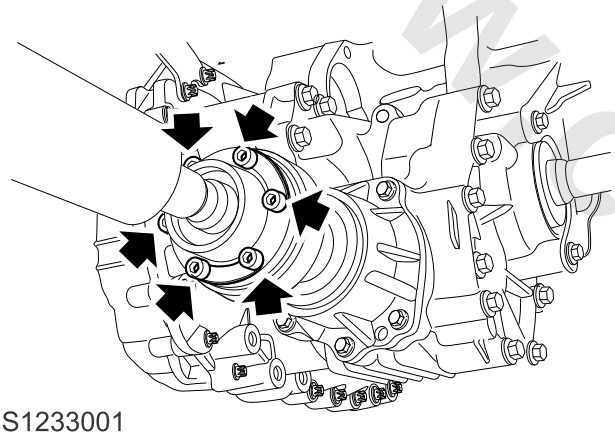

S1233001

5. Remove 2 bolts (1) fixing the PTU bracket to the PTU.
6. Remove 2 bolts (2) fixing the PTU bracket to the engine, and remove the bracket.

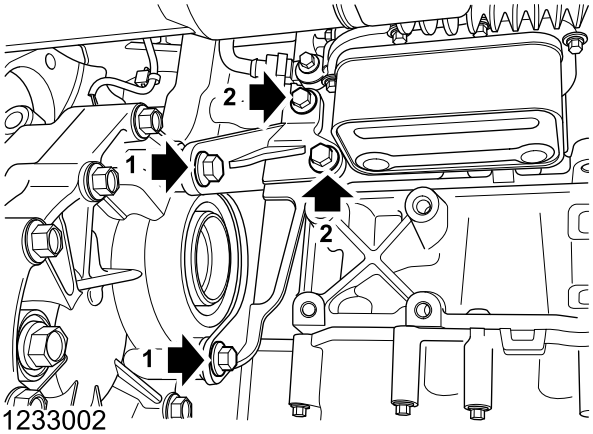

S1233002

7. Remove 2 bolts connecting the PTU and the lower transmission.

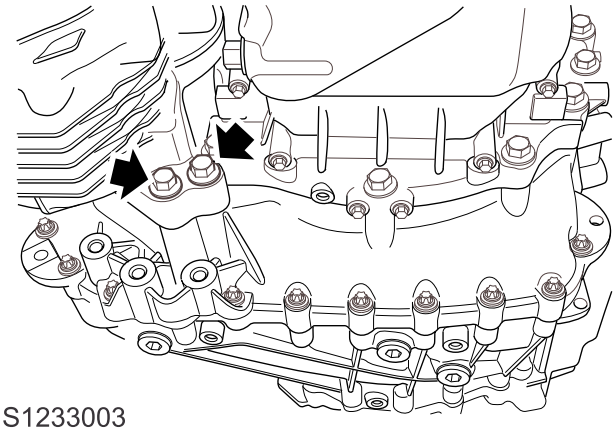

S1233003

8. Remove 3 bolts connecting the PTU and the upper transmission.

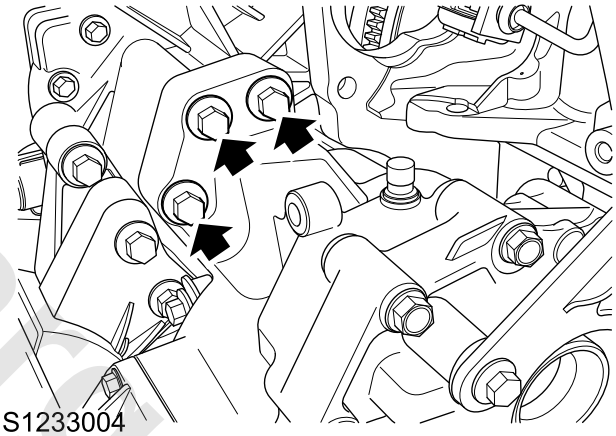

S1233004

9. Support the PTU with a bracket, move the PTU to the right to remove it.

Caution: *Do not invert the PTU assembly.*

Refit

1. Clean the mating face of the PTU and automatic transmission.
2. Clean the locating pin and pin hole of the PTU.
3. Secure the PTU on the bracket, then lift and locate the bracket to the vehicle.
4. Align the locating pin of the PTU with the pin hole of the automatic transmission and allow the PTU and automatic transmission to fit together.
5. Fit 5 bolts fixing the PTU to the transmission, tighten them to **70–80Nm**, and check the torque.
6. Fit the PTU bracket to the engine, fit 2 bolts, tighten to **42–48Nm** and check the torque.
7. Fit 2 bolts fixing the PTU to the PTU bracket, tighten to **42–48Nm**, and check the torque.
8. Secure the drive shaft on the PTU, fit 6 new bolts, tighten to **26–34Nm**, and check the torque.
9. Fit the axle shaft of the right front wheels.

☞**Right Front Wheel Axle Shaft Refit**

www.cargeek.ir

10. Refill automatic transmission fluid.

Dual Clutch Automatic Transmission Fluid - Refill

11. Lower the vehicle.

Right Oil Seal - PTU Assembly

Remove

1. Drain the dual clutch automatic automatic transmission fluid.

Dual Clutch Automatic Transmission Fluid - Drain

2. Remove the right drive shaft assembly.

Right Drive Shaft Assembly Remove

3. Remove the oil seal at the right side of the power takeoff.

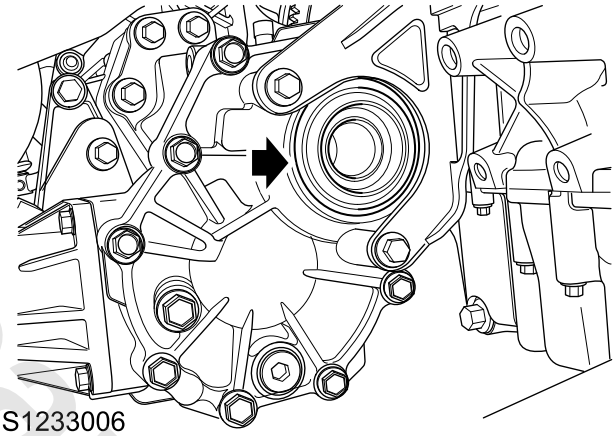

S1233006

4. Carefully remove the oil seal and discard it.

Refit

1. Gently apply the specified dual clutch automatic transmission fluid around the lip with clean hands.
2. Fit the new oil seal into the transmission housing with the **TPT00214** and hammer.

Caution: Take care not to damage the oil seal.

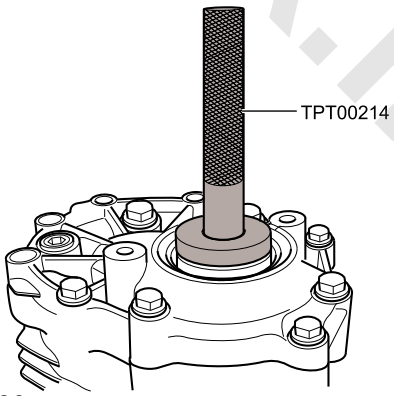

S1233028

3. Fit the right drive shaft assembly.

Right Drive Shaft Assembly Refit

4. Refill the transmission fluid and check the oil level.

Dual Clutch Automatic Transmission Fluid - Refill

www.cargeek.ir

O Ring - PTU Assembly

Remove

1. Drain the automatic transmission fluid.

Dual Clutch Automatic Transmission Fluid - Drain

2. Remove the PTU.

PTU Remove

3. Remove and discard the O ring.

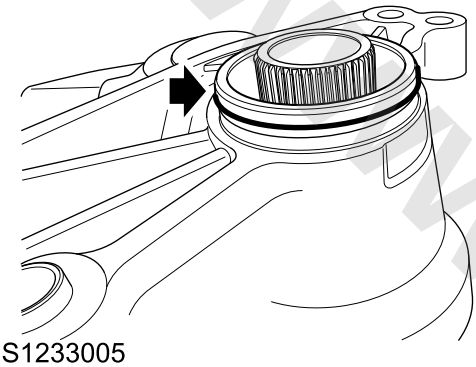

S1233005

Refit

1. Fit a new O ring to the PTU.

Caution: *The O ring shall be in the groove and shall not curve.*

2. Fit the PTU.

PTU Refit

3. Refill automatic transmission fluid.

Dual Clutch Automatic Transmission Fluid - Refill

Drain and Refill

Drain

1. Raise the vehicle on a lift.

Warning: Do not work on or under a vehicle supported only by a jack. Always support the vehicle on safety stands.

2. Put a proper container under the PTU.
3. Clean the surrounding area of oil filler plug, remove the oil filler plug and discard the seal gasket.
4. Clean the surrounding area of the drain plug, remove the drain plug and discard the seal gasket.

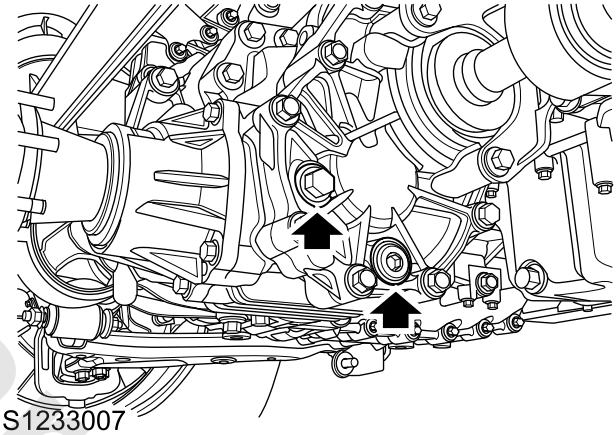

S1233007

5. Drain the PTU oil.

Refill

1. Clean the filling port and drain plug.
2. Fit a new seal gasket to the drain plug, and tighten the drain plug to **29–34Nm**.
3. Refill PTU oil of a specified volume into the PTU through the filling port.

Drain and Refill	0.52L (Volume for refill after 10min's horizontal drain)
Refill from Dry State	0.55-0.63 L

4. Fit a new seal gasket to the oil filler plug, and tighten the oil filler plug to **29–34Nm**.
5. Lower the vehicle.

www.cargeek.ir

PTU Assembly Oil Check and Refill

Check and Refill

1. Raise the vehicle on a lift.

Warning: Do not work on or under a vehicle supported only by a jack. Always support the vehicle on safety stands.

2. Check the surrounding area of each oil plug/oil seal for oil leakage, replace the faulty oil plug or seal gasket, oil seal as necessary.
3. Put a proper container under the PTU.
4. Clean the area around the oil filler plug, remove the oil filler plug and seal gasket, and discard the seal gasket.
5. If the oil level port has oil drop overflows, finish the operation and turn off the engine; if no oil drop overflows there, refill appropriate oil.

Warning: Observe due care when draining gearbox fluid as the fluid can be very hot.

6. Refill the PTU oil into the PTU through the filling port until the oil overflows.
7. Fit a new seal gasket to the oil filler plug, and tighten the oil filler plug to **29–34Nm**.

Breather Plug

Remove

1. Remove the PTU assembly.

PTU Assembly Remove

2. Remove the cover of the vent plug with pliers.
3. With the **TPT00177** and the impact puller of the **TPT00117**, remove the vent plug and discard it.

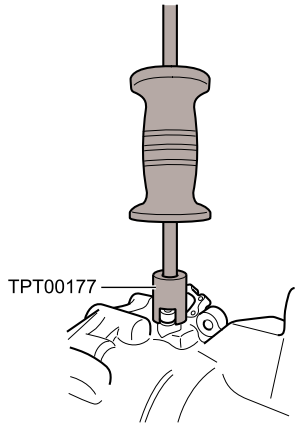

S1233024

Refit

1. Clean the mounting location of the vent plug and ensure it is free from foreign material.
2. With the **TPT00194** and hammer, fit a new vent plug to the PTU assembly.

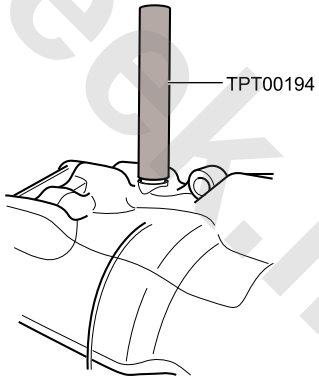

S1233026

3. Fit the PTU assembly.

PTU Assembly Refit

www.cargeek.ir

Special Tools

Tool Number	Description	Picture
TPT00214	Front right wheel drive shaft oil seal presser-PTU	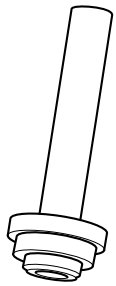 TPT00214
TPT00177	Vent-plug Sleeve-PTU	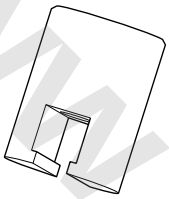 TPT00177
TPT00117	Remover driveshaft oil seal	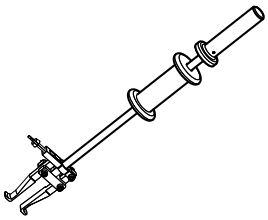 TPT00117
TPT00194	Vent-plug Presser-PTU	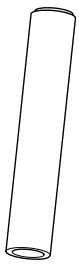 TPT00194

www.cargeek.ir

www.cargeek.ir

Final Drive Unit-AWD

Specifications

Torque

Description	Value
Bolt -FDU assy to rear subframe	120–140Nm
Bolt -EMCD to FDU assy	17.7–24Nm
nut -intermediate driving shaft to FDU assy	55–61Nm
Bolt -connector bracket to FDU assy	6.9–8.8Nm
Bolt -TCCM to fix bracket	8–10Nm
Drain plug-FDU	29–34Nm
Filler plug-FDU	29–34Nm

www.cargeek.ir

www.cargeek.ir

www.cargeek.ir

Parameters

Description	Rear Axle Assembly
Overall length	520mm
Total Width	340mm
Total Height	180mm
Weight (with oil)	24.2Kg
Speed Ratio	2.214
Lubricant Model	Idemitsu Apolloil Wide Gear LW 80W-90 GL5
Maximum Input Torque	1,000Nm
Torque Manager: Operating Voltage Maximum Operating Current	 12V 2.1A

www.cargeek.ir

www.cargeek.ir

Description and Operation

System Layout

Rear Axle Assembly

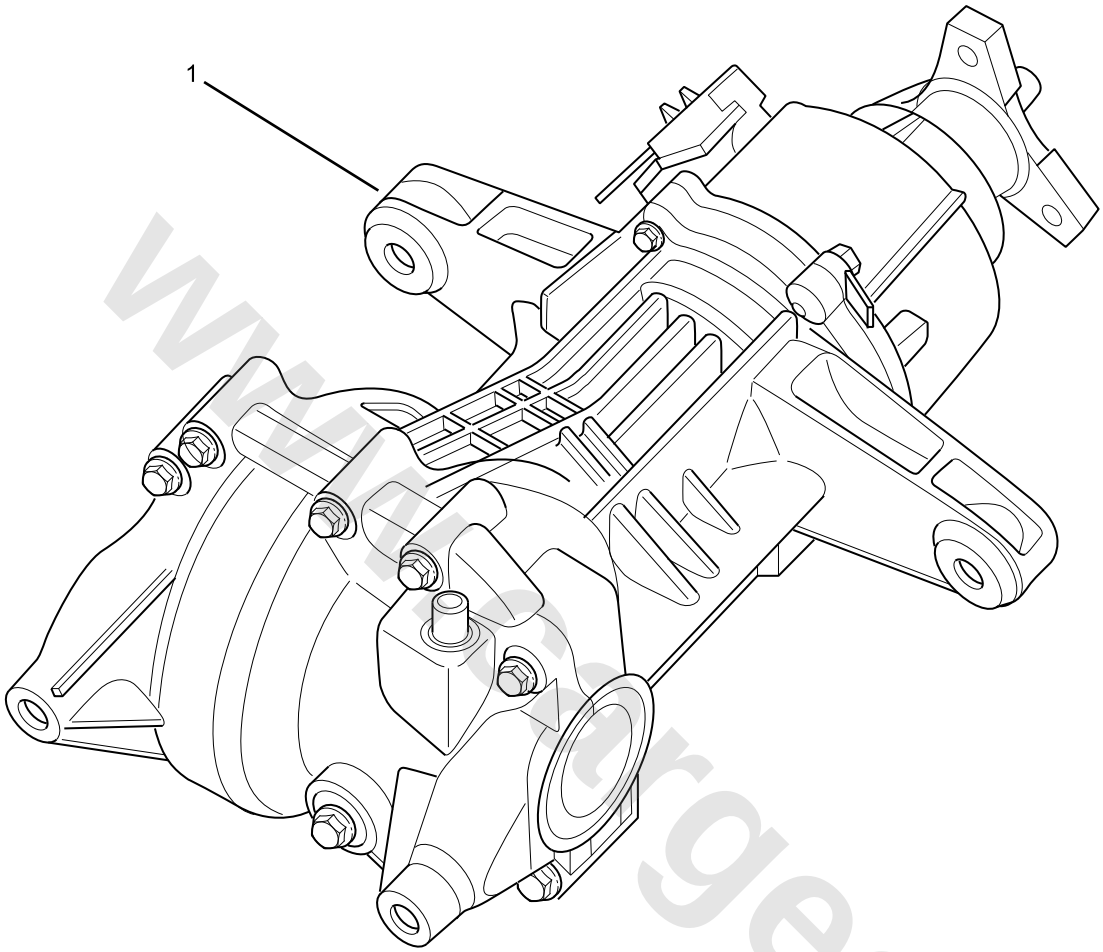

S9420001

1. Rear Axle Assembly

www.cargeek.ir

Rear Axle Assembly Accessory Drawing

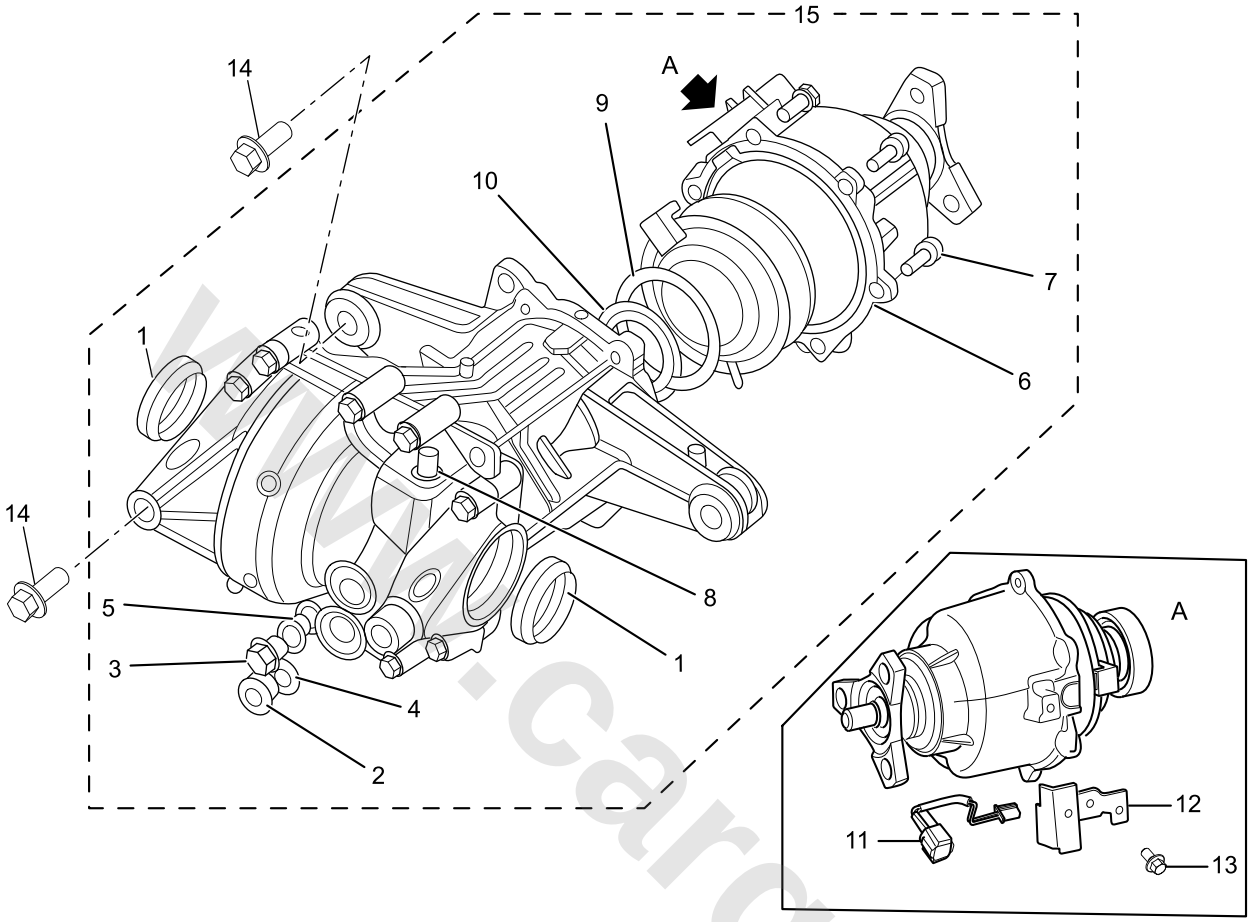

S9420002

1. Oil Seal - Rear Axle Shaft
2. Drain Plug
3. Oil Filler Plug
4. Gasket - Drain Plug
5. Gasket - Oil Filler Plug
6. Electromagnetic Torque Control
7. Bolt - Torque Control
8. Vent Plug
9. Buffer Washer
10. Input Shaft Oil Seal
11. Torque Control Harness
12. Bracket - Torque Control
13. Screw - Torque Control Bracket
14. Bolt - Rear Axle Housing
15. Rear Axle Assembly

www.cargeek.ir

www.cargeek.ir

System Control Diagram

Four-wheel-drive System Control Diagram

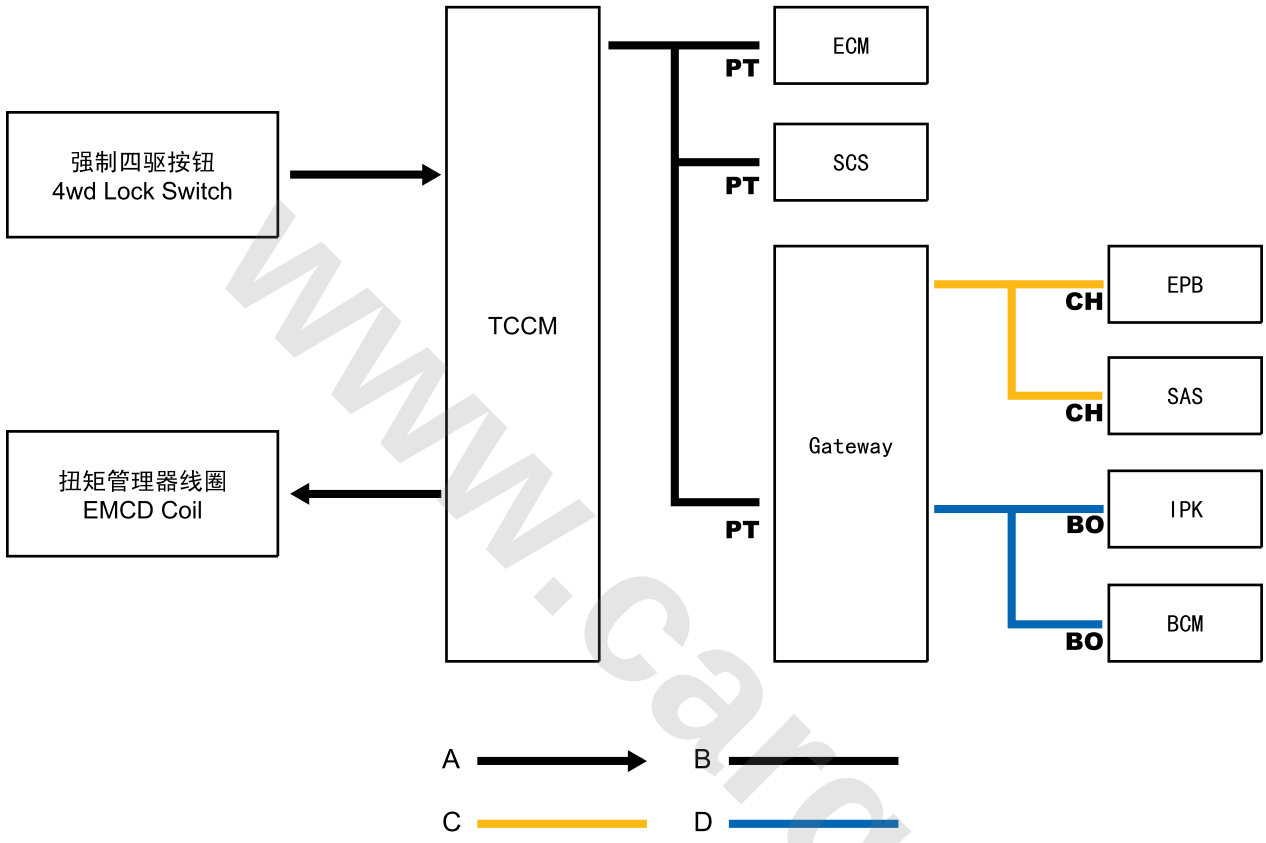

S9421001

A = Hard Wire; B = Power HS CAN Bus; C = Chassis HS CAN Bus; D = Body HS CAN Bus

www.cargeek.ir

Description

Overview of Rear Axle Assembly

The rear axle assembly (**FDU**) is a power transmission device used for the city SUV with transverse engine/transmission, which is composed of the electromagnetic torque control (**EMCD**) and the rear axle differential. The **FDU** can provide the following functions: 1) Uses deceleration of the hyperbolic gear set increase to increase the torque transferred from the intermediate drive shaft, provides 90°steering and distributes the torque to the two half shafts of the rear axle; 2) Compresses the internal friction plate by changing the input current, controls the output torque of the rear axle and the speed difference between the front axle and the rear axle; 3) Controls the speed difference between the left half shaft and the right half shaft of the rear axle by the differential.

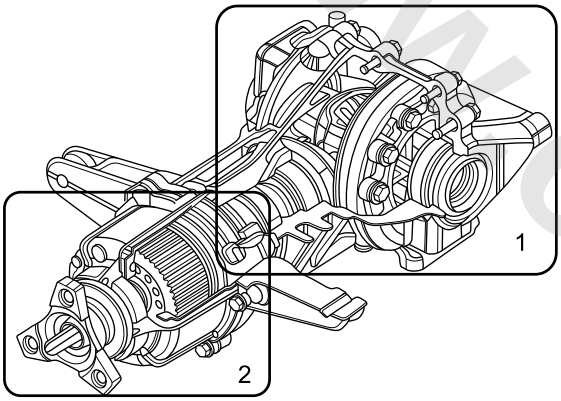

S9420003

1. Rear Axle Differential
2. Electromagnetic Torque Control

Electromagnetic Torque Control (EMCD)

The electromagnetic torque control developed by GKN Driveline is an active control coupler between the axle wheels, which is used for the auto mode and AWD system. The **EMCD** is a most compact electronic coupler with all functions, which is fitted between the axles and used for the powertrain.

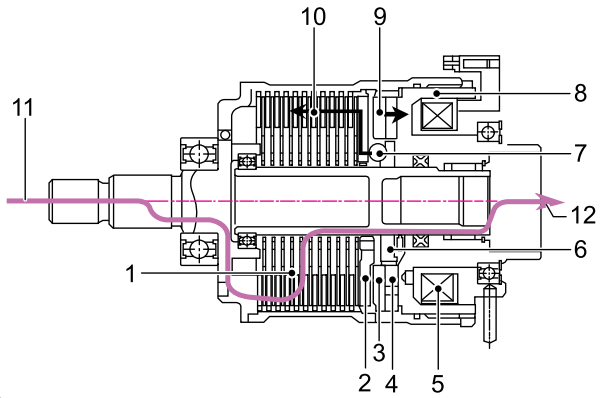

S9420004

1. Main Clutch
2. Pressure Plate
3. Armature
4. Guide Clutch
5. Electromagnet
6. Cam
7. Reaction
8. Magnetic Force
9. Gravity
10. Cam Thrust
11. Input
12. Output

The working principle of the torque control:

1. The magnetic field from the electromagnet current causes the armature to compress the guide clutch.
2. The resistance of the guide clutch can produce rotation torque in the slope device of the two-way ball.
3. The rotating force drives the ball to roll up along the opposite slope and thus moves the front cam forward;
4. The cam thrust is transferred by compressing the pressure plate of the main clutch;
5. The rotation torque of the external panel (input) transferred to the internal panel (output) is proportional to the current.
6. The electronic control unit (**TCCM**) controls the clutch torque by adjusting the current according to the applicable vehicle input and control algorithm.

Technical Features

- The auto mode applies a closed clutch lubrication system.
- The steel guide clutch with special grooves has undergone heat treatment, so it has a high durability and low resistance.
- Maximum Current: 3.0 A

Advantages

- Improved traction and maneuverability
- Compact design structure
- Low energy consumption
- Light weight and reliable performance

4WD Control Module (TCCM)

The 4WD control module (**TCCM**) is under the driver seat. The **TCCM** adjusts the operating current of the torque control and controls the torque transferred to the rear axle according to the applicable vehicle input and control algorithm.

www.cargeek.ir

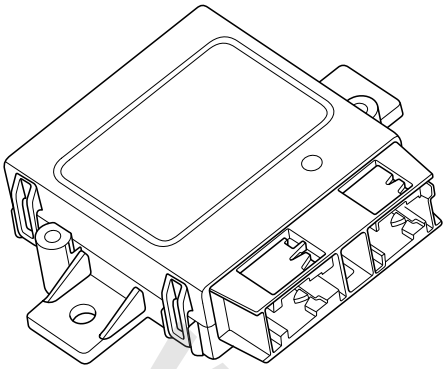

S9420005

End View and Pin Information of 4WD Control Module (TCCM) Harness Connector BY151

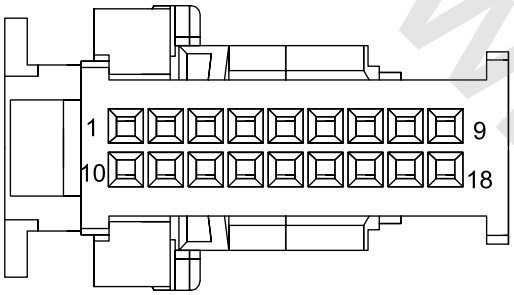

1: Ground
2:—
3: Lock Mode Button
4:—
5:—
6:—
7:—
8: Power HS CAN High
9: Power HS CAN Low
10: KL.30
11: Torque Control Coil +
12: Torque Control Coil-
13: Wake-up Line Signal
14:—
15:—
16:—
17:—
18:—

www.cargeek.ir

Operation

4WD Power Flow Chart

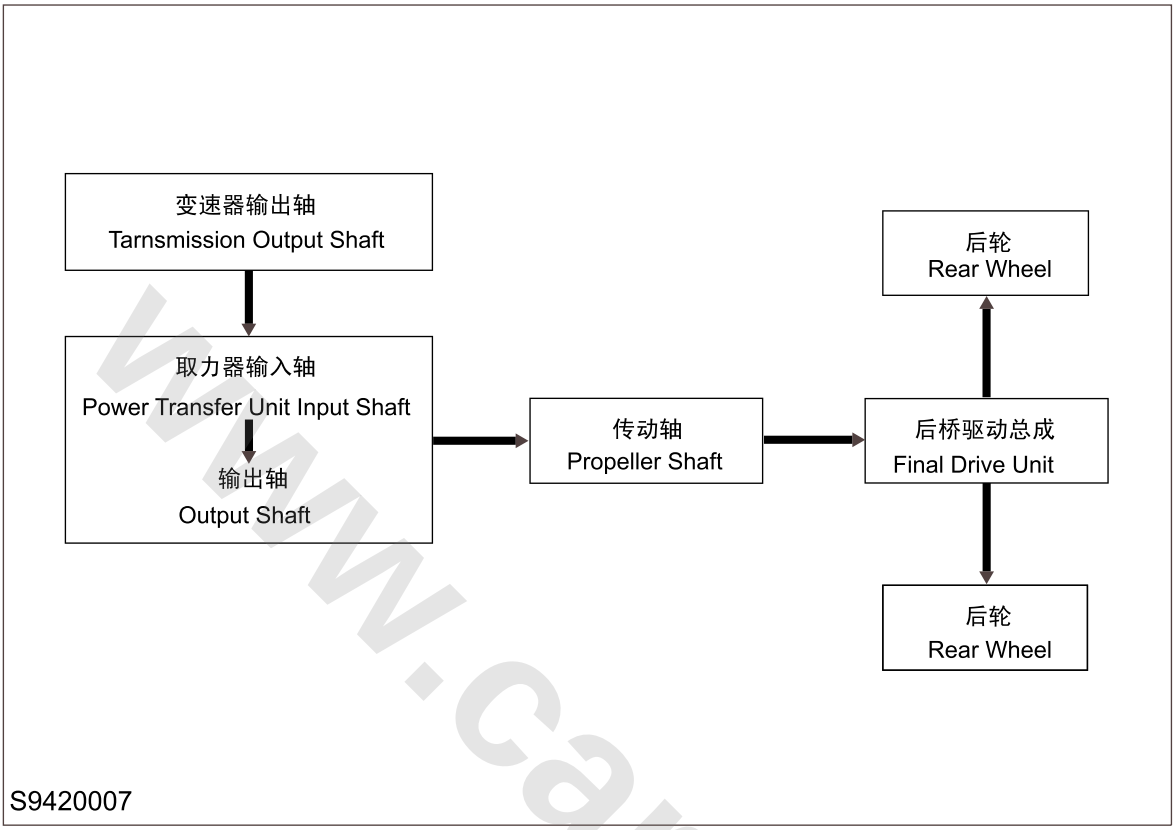

www.cargeek.ir

www.cargeek.ir

Rear Axle Assembly Power Flow Chart

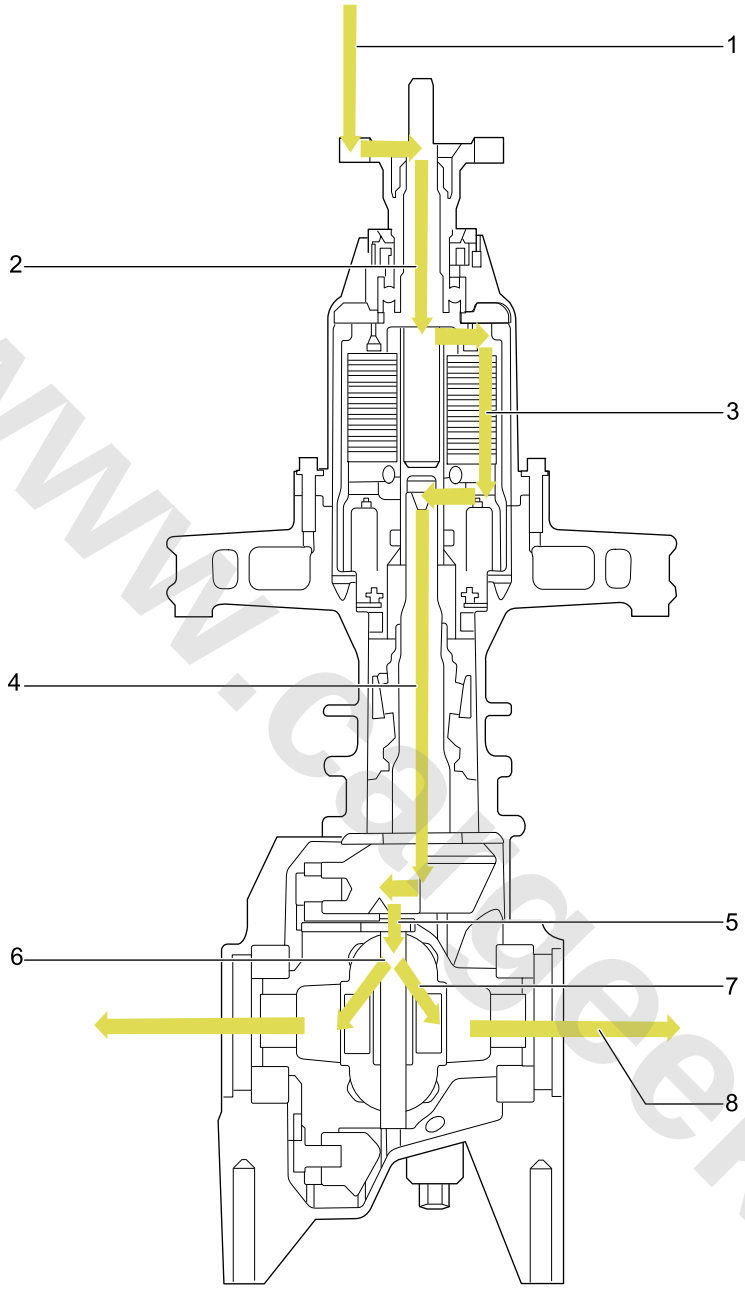

S9420008

1. The flange inputs torque by the intermediate drive shaft.
2. The torque is transferred to the housing inside the **EMCD** via the flange spline.
3. The clutch transfers the torque from the housing inside the **EMCD** to the spindle of the **EMCD**.
4. The torque is transferred from the spindle spline of the **EMCD** to the input shaft of the **FDU**.
5. The torque is transferred to the differential housing through the hyperbolic gear set.
6. The torque is transferred to the planetary gear through the differential pin shaft.
7. The torque is transferred to the half shaft gear through the planetary gear.
8. The torque is output by the spline of the half shaft gear.

www.cargeek.ir

Description of 4WD Function

The 4WD system improves the off-road performance, maneuverability, driving stability and safety of the vehicle by controlling the driving force distribution of the four wheels. The system controls the rational distribution of the engine torque over the four wheels according the driver's intention, vehicle state and actual road condition. The 4WD mode includes auto mode and lock mode. The auto mode is used on common paved roads, and the lock mode is only used by the driver in trouble. In lock mode, the 4WD system will limit the vehicle speed, when the vehicle speed is higher than 60km/h, the 4WD system will automatically shift to the auto mode, when the vehicle speed is less than 60km/h, the the 4WD system will not resume the lock mode.

SN.	Characteristic	Remark
1	Auto Mode	Shift between 2WD and 4WD is automatically done according to the vehicle state and actual road condition.
2	Lock Mode	Locked in 4WD Mode

The 4WD system completes all operations for the power-on initialization and one fault self-test within 200ms when the power mode of the vehicle shifts from OFF to Wake-up. Under different conditions, the **TCCM** detects that the vehicle is unstable or is about to lose stability, it will improve the dynamic characteristic of the vehicle by controlling the torque distribution of the front and rear axles.

Lock Mode Button

Turn the ignition switch to "ON" position, press the lock mode button to activate the lock mode, and the indicator lamp illuminates (green); press the button again to enter into the auto mode and the indicator lamp turns off. After the lock mode is activated, the vehicle powers off, if powers on the vehicle within 1min, the lock mode will be maintained; if powers on the vehicle after 1min, the 4WD system will enter into the auto mode.

4WD Indicator Lamp

Lock Mode ON Indicator Lamp - Green

When the lock mode is applied, the indicator lamp (green) illuminates; when the auto mode is applied, the indicator lamp turns off.

4WD Failure Indicator Lamp - Yellow

When the 4WD system fails, the 4WD Failure indicator lamp (yellow) will illuminate. Place the ignition switch in "ON" position, the indicator lamp (yellow) illuminates and will go out after few seconds.

In some cases, the 4WD system may fail, then the 4WD Failure indicator lamp (yellow) will illuminate for a short while. For example, when driving on rough roads, the speed difference between the front wheel and the real wheel will exist for a long time, this causes the clutch in the middle of the 4WD system to be hot. In this case, the 4WD system disconnects temporarily the torque transfer of the rear axle, and illuminates the 4WD Failure indicator lamp (yellow). Normally, the vehicle will resume the 4WD mode after a short while and the indicator lamp will go out. Therefore, if the 4WD Failure indicator lamp (yellow) illuminates for a short time, no service is required for this condition.

www.cargeek.ir

Service Procedures

Rear Axle Assembly

Remove

1. Disconnect the battery negative.
2. Raise the vehicle on a lift.

Warning: Do not work on or under a vehicle supported only by a jack. Always support the vehicle on safety stands.

3. Drain rear axle assembly oil.

Rear Axle Assembly Oil - Drain

4. Remove the left/right drive shaft.

Left Drive Shaft Remove
Right Drive Shaft Remove

5. Remove the rear horizontal stabilizer bar.

Rear Horizontal Stabilizer Bar Remove

6. Remove 3 bolts and nuts fixing the rear drive shaft to the rear axle assembly, and discard the nut.

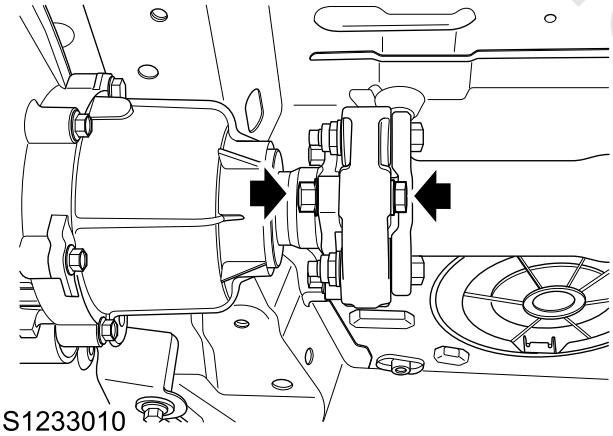

S1233010

7. Disconnect the external connector of the torque control and take away the harness clip.

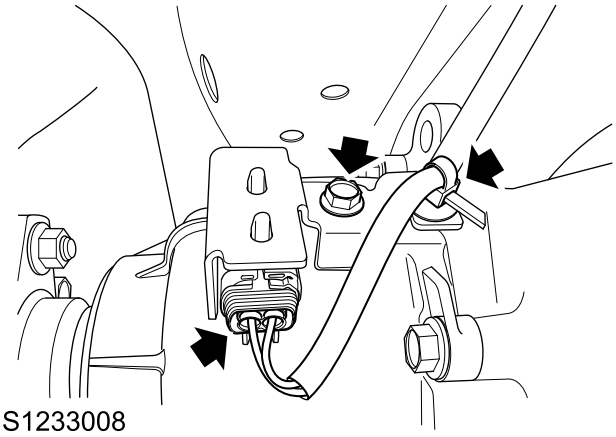

S1233008

8. Place a hydraulic bracket under the rear axle assembly.
9. Remove 4 bolts fixing the rear axle assembly to the rear subframe, remove the rear axle assembly, lower the bracket and move the rear axle assembly to the workbench.

Caution: *Do not invert the rear axle assembly.*

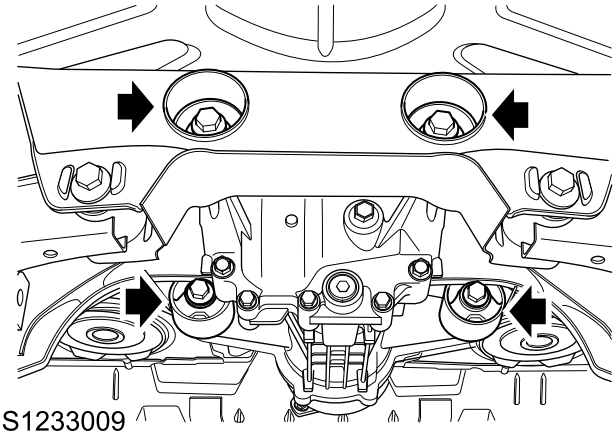

S1233009

Refit

1. Position the rear axle assembly on the hydraulic bracket, lift the bracket and put the rear axle assembly on the mounting position, fit 4 bolts, tighten to **120–140Nm** and check the torque.
2. Take away the hydraulic bracket.
3. Connect the connector of the torque control.
4. Fit the rear horizontal stabilizer bar.

Rear Horizontal Stabilizer Bar Refit

5. Fit the left/right drive shaft.

Left Drive Shaft Refit
Right Drive Shaft Refit

6. Fit the rear drive shaft.

Rear Horizontal Stabilizer Bar Refit

7. Refill rear axle assembly oil.

Rear Axle Assembly Oil - Refill

8. Lower the vehicle.
9. Connect the battery negative.
10. With the **VDS**, perform the self-test function of the 4WD system according to the path ("Fast Track® Other® 4WD Control Module Self-test") and interface prompt.

www.cargeek.ir

Torque Control

Remove

1. Disconnect the battery negative.
2. Raise the vehicle on a lift.

Warning: Do not work on or under a vehicle supported only by a jack. Always support the vehicle on safety stands.

3. Remove 3 bolts fixing the drive shaft to the flange and take away the drive shaft.

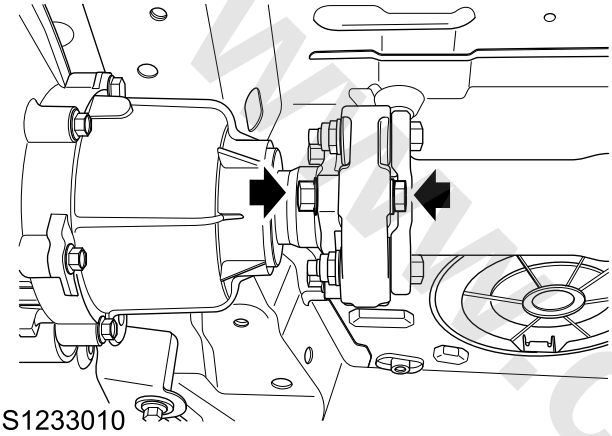

S1233010

4. Disconnect the external connector of the torque control.

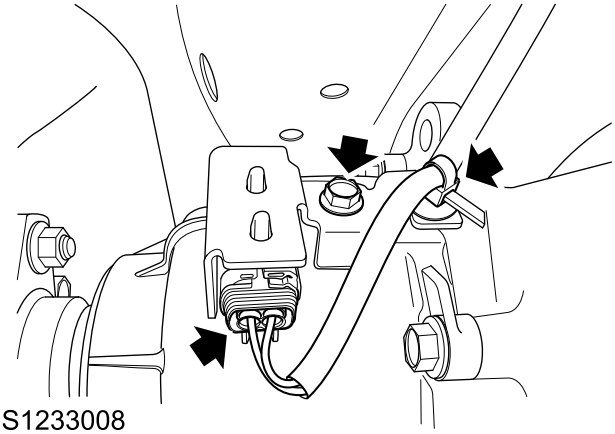

S1233008

5. Remove 6 bolts fixing the torque control to the rear axle assembly, and remove the torque control.

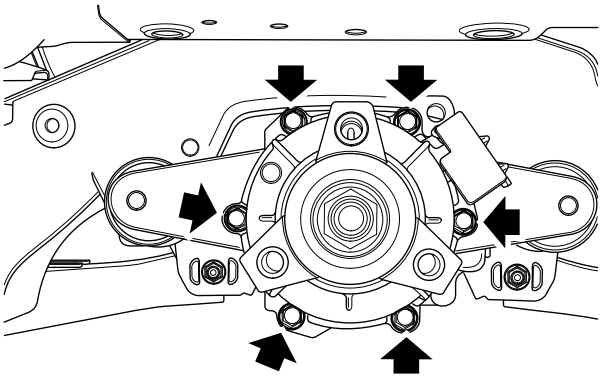

S1233011

6. Remove and discard the buffer washer.
7. Remove and discard the input shaft oil seal.

Refit

1. Refit the input shaft oil seal and the buffer washer.

☞ **FDU Input Shaft Oil Seal**

2. Clean the mating face of the torque manager and rear axle assembly.
3. Apply sealant to the mating face of the rear axle assembly housing.
4. Fix the torque manager to the rear axle assembly, fit 6 bolts, tighten to **17.7–24Nm** in sequence and check the torque.

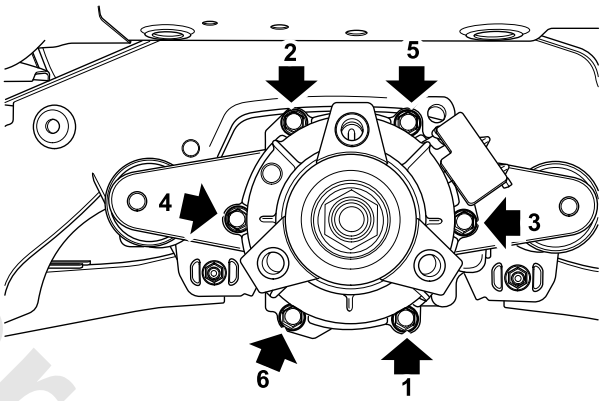

S1233014

5. Connect the external connector of the torque manager.
6. Fix the drive shaft to the flange, fit 3 bolts, tighten them to **55–61Nm**, and check the torque.
7. Lower the vehicle.
8. Connect the battery negative.
9. With the **VDS**, perform the self-test function of the 4WD system according to the path ("Fast Track® Other® 4WD Control Module Self-test") and interface prompt.

www.cargeek.ir

Harness - Torque Control

Remove

1. Remove the torque control.

Torque Control Remove

2. Remove 1 bolt fixing the connector bracket to the torque control and remove the bracket.

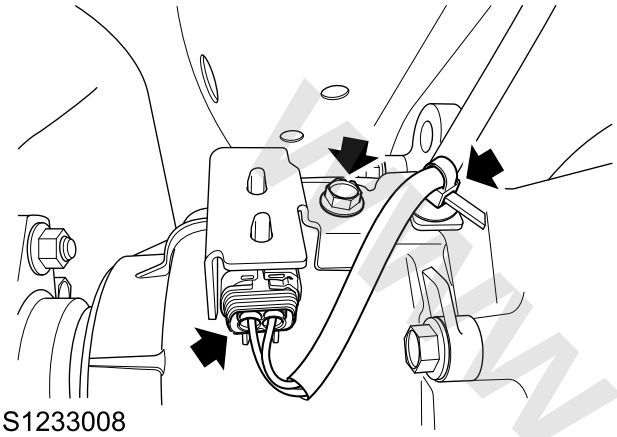

S1233008

3. Disconnect the external connector of the torque control.
4. Remove the harness and insulating plug from the torque control housing.

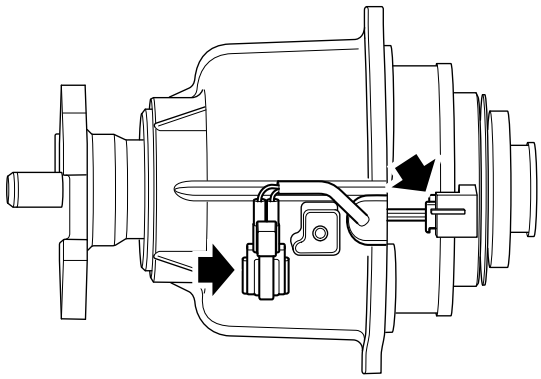

S1233012

Refit

1. Fit the harness and insulating pug to the torque coupler housing.
2. Connect the internal connector of the torque coupler.
3. Fix the connector bracket to the torque coupler, fit 1 bolt, tighten to **6.9–8.8Nm**, and check the torque.
4. Fit the torque coupler.

Torque Coupler Refit

5. With the **VDS**, perform the self-test function of the 4WD system according to the path ("Fast Track® Other® 4WD Control Module Self-test") and interface prompt.

FDU Input Shaft Oil Seal

Remove

1. Disconnect the battery negative.
2. Drain rear axle assembly oil.

Rear Axle Assembly Oil Drain

3. Remove the torque control.

Torque Coupler Remove

4. Remove and discard the buffer washer.
5. Remove and discard the input shaft oil seal.

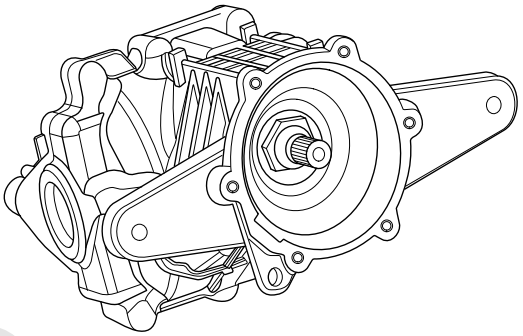

S1233018

Refit

1. With the **TPT00213** and hammer, fit the input shaft oil seal.

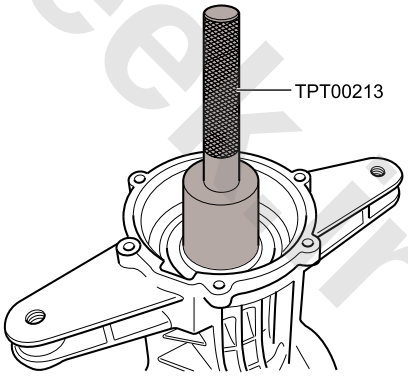

S1233022

2. Align the notch of the new buffer washer with the notch on the housing and fit the washer properly.
3. Fit the torque coupler.

Torque Coupler Refit

4. Refill rear axle assembly oil.

Rear Axle Assembly Oil Refill

5. Connect the battery negative.

www.cargeek.ir

www.cargeek.ir

4WD Control Module (TCCM)

Remove

1. Disconnect the battery negative.
2. Remove the passenger seat assembly.

Passenger Seat Assembly Remove (Manual Seat)
Passenger Seat Assembly Remove (Power Seat)

3. Cut the carpet along the break with a scissor.

Caution: *Take care not to cut off the harness under the carpet.*

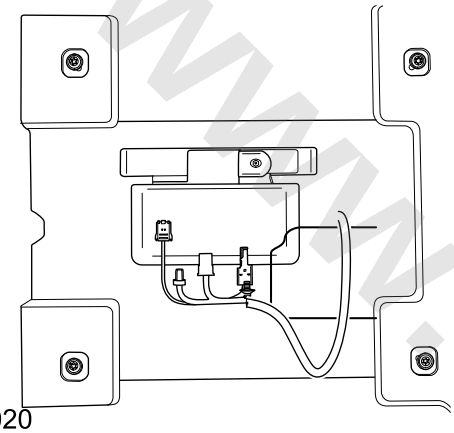

S1233020

4. Disconnect the connector (1) of the **TCCM**.
5. Remove 2 bolts (2) fixing the **TCCM** to the bracket, and remove the **TCCM**.

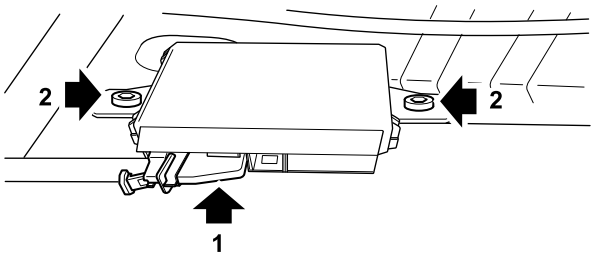

S1233021

Refit

1. Fix the **TCCM** to the bracket, fit 2 bolts, tighten to **8–10Nm** and check the torque.
2. Connect the connector of the **TCCM**.
3. Fit the carpet.
4. Fit the passenger seat assembly.

Passenger Seat Assembly Refit (Manual Seat)
Passenger Seat Assembly Refit (Power Seat)

5. Connect the battery negative.
6. Programme and code the **TCCM**.

Self-learning and Adjustment, Programming and Coding - TCCM Replacement

www.cargeek.ir

Right Oil Seal - Rear Axle Assembly

Remove

1. Raise the vehicle on a lift.

Warning: Do not work on or under a vehicle supported only by a jack. Always support the vehicle on safety stands.

2. Drain rear axle assembly oil.

Rear Axle Assembly Oil - Drain

3. Remove the right rear drive shaft.

Right Drive Shaft Remove

4. Remove the oil seal and discard it.

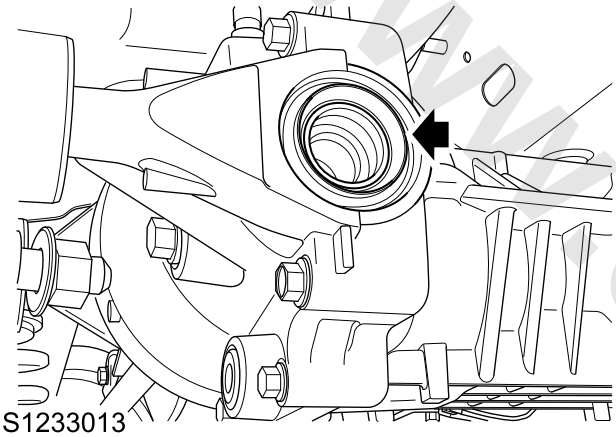

S1233013

Refit

1. Clean the oil seal groove.
2. With the **TPT00212** and hammer, fit the new oil seal to the rear axle assembly.

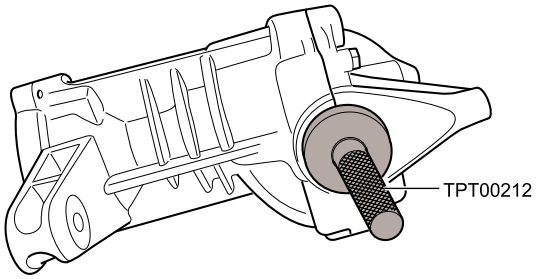

S1233023

3. Fit the right rear drive shaft.

Right Rear Drive Shaft Refit

4. Refill rear axle assembly oil.

Rear Axle Assembly Oil - Refill

5. Lower the vehicle.

Left Oil Seal - Rear Axle Assembly

Remove

1. Raise the vehicle on a lift.

Warning: Do not work on or under a vehicle supported only by a jack. Always support the vehicle on safety stands.

2. Drain rear axle assembly oil.

Rear Axle Assembly Oil - Drain

3. Remove the left rear drive shaft.

Left Rear Drive Shaft Remove

4. Remove the oil seal and discard it.

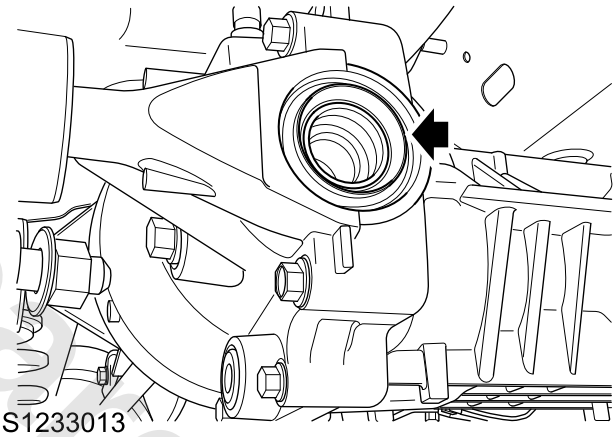

S1233013

Refit

1. Clean the oil seal groove.
2. With the **TPT00212** and hammer, fit the new oil seal to the rear axle assembly.

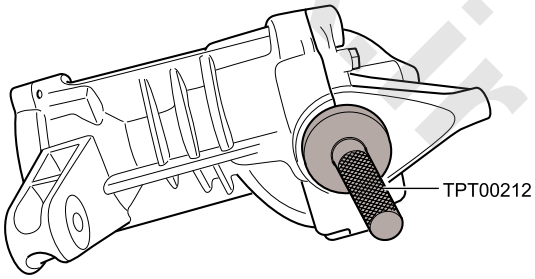

S1233023

3. Fit the left rear drive shaft.

Left Rear Drive Shaft Refit

4. Refill rear axle assembly oil.

Rear Axle Assembly Oil - Refill

5. Lower the vehicle.

www.cargeek.ir

Drain and Refill - Rear Axle

Drain

1. Raise the vehicle on a lift.

Warning: Do not work on or under a vehicle supported only by a jack. Always support the vehicle on safety stands.

2. Put a proper container under the rear axle assembly.
3. Clean the surrounding area of oil filler plug, remove the oil filler plug and discard the seal gasket.
4. Clean the surrounding area of the drain plug, remove the drain plug and discard the seal gasket.

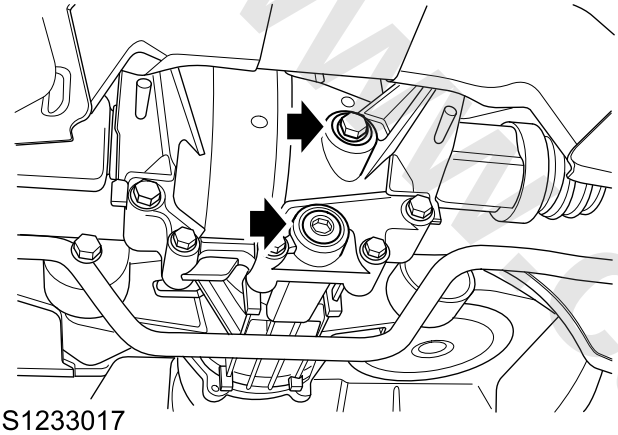

S1233017

5. Drain rear axle assembly oil.

Refill

1. Clean the filling port and drain plug.
2. Fit a new seal gasket to the drain plug, and tighten the drain plug to **29–34Nm**.
3. With an appropriate and clean funnel, refill the rear axle assembly with oil through the filling port until the oil reaches the specified value.

Drain and Refill	0.51L (Volume for refill after 10min's horizontal drain)
Refill from Dry State	0.53-0.59 L

4. Fit a new seal gasket to the oil filler plug, and tighten the oil filler plug to **29–34Nm**.
5. Lower the vehicle.

FDUFluid Check and Refill

Check and Refill

1. Raise the vehicle on a lift.

Warning: Do not work on or under a vehicle supported only by a jack. Always support the vehicle on safety stands.

2. Check the surrounding area of each oil plug/oil seal for oil leakage, replace the faulty oil plug or seal gasket, oil seal as necessary.
3. Put a proper container under the rear axle assembly.
4. Clean the area around the oil filler plug, remove the oil filler plug and seal gasket, and discard the seal gasket.
5. If the oil level port has oil drop overflows, finish the operation and turn off the engine; if no oil drop overflows there, refill appropriate oil.

Warning: Observe due care when draining gearbox fluid as the fluid can be very hot.

6. Refill the rear axle assembly oil through the filling port until the oil overflows.
7. Fit a new seal gasket to the oil filler plug, and tighten the oil filler plug to **29–34Nm**.

www.cargeek.ir

www.cargeek.ir

Breather Plug

Remove

1. Remove the rear axle assembly.

☞ **Rear Axle Assembly Remove**

2. Remove the cover of the vent plug with pliers.
3. With the **TPT00177** and the impact puller of the **TPT00117**, remove the vent plug and discard it.

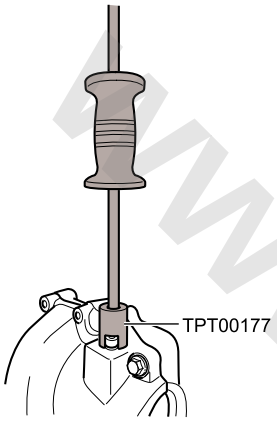

S1233025

Refit

1. Clean the mounting location of the vent plug and ensure it is free from foreign material.
2. With the **TPT00194** and hammer, fit a new vent plug to the rear axle assembly.

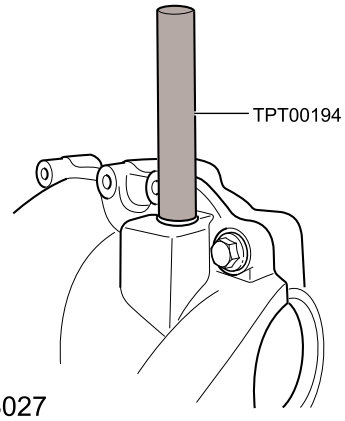

S1233027

3. Fit the rear axle assembly.

☞ **Rear Axle Assembly Refit**

www.cargeek.ir

www.cargeek.ir

Special Tools

Tool Number	Description	Picture
TPT00213	Input shaft oil seal presser-FDU	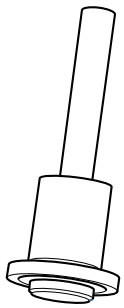 TPT00213
TPT00212	Rear wheel drive shaft oil seal presser-FDU	TPT00212
TPT00177	Vent-plug Sleeve-PTU	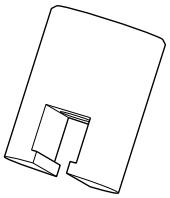 TPT00177
TPT00117	Remover driveshaft oil seal	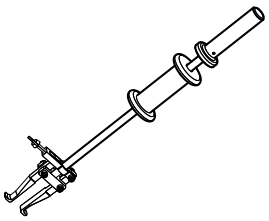 TPT00117
TPT00194	Vent-plug Presser-PTU	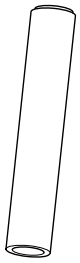 TPT00194

www.cargeek.ir

www.cargeek.ir

www.cargeek.ir

HVAC System

Specifications

Torque

Description	Value
Bolt-Air conditioner compressor to engine	19–25Nm
Bolt-compressor/condenser pipe to compressor	19-25Nm
Bolt - PAS to PAS bracket	22–28Nm
Blot- A/C Compressor to engine	19–25Nm
Bolt-Expansion valve to evaporator	5.5Nm
Nut-Air conditioner pipe to expansion valve	18–22Nm
Nut-Air conditioner pipe to condenser	19–25Nm
Nut-evaporator/compressor pipe A to evaporator/compressor pipe B	7 - 10 Nm
Nut-heater assembly to body	4Nm
Bolt-heater assembly to body	5Nm
Bolt-Blow to heater case	1.2Nm
Bolt-Heater water pipe to heater case	1.2Nm

www.cargeek.ir

www.cargeek.ir

Parameters

Parameters

Type of Refrigerant	HFC-R134a
Volume of Refrigerant	560±20 g
Compressor: Displacement: Speed •Minimum Speed •Maximum Speed Lubricant: Refill Amount (New)	 8–161 cm^3/r 600 r/min 9200 r/min SP10 130±10 ml
Evaporator Temperature Sensor: •Compressor ON •Compressor OFF	 ≥5℃ Off after 60s @ ≤3.5℃ or Off immediately @ ≤2℃
Pressure Sensor: Pressure Protection: •High Pressure Protection ON •Low Pressure Protection ON	 When pressure ≥3.14 Mpa, the switch disconnects. When pressure ≤0.196 Mpa, the switch disconnects.

Amount of lubricating oil for replacement of air conditioning system components (parameters including oil recovered):

Total amount of lubricant	130±10 ml
Compressor replacement	Remaining lubricant in the original compressor
Condenser replacement	30 ml
Evaporator Replacement	40 ml
Replace one or more pipes	30 ml
Note: 1. large leak, cracked hose, impact or open relief valve can cause sudden loss of the refrigerant. Refrigerant leak or slow leak will not cause this degree of fluid loss. When replacing components which cause a huge loss of refrigerant, add an appropriate amount of fluid to specific components. 2.If the lost fluid of the components exceeds the specified value, add as per the amount of loss.	

www.cargeek.ir

www.cargeek.ir

Description and Operation

System Layout

Heating and Ventilation Components

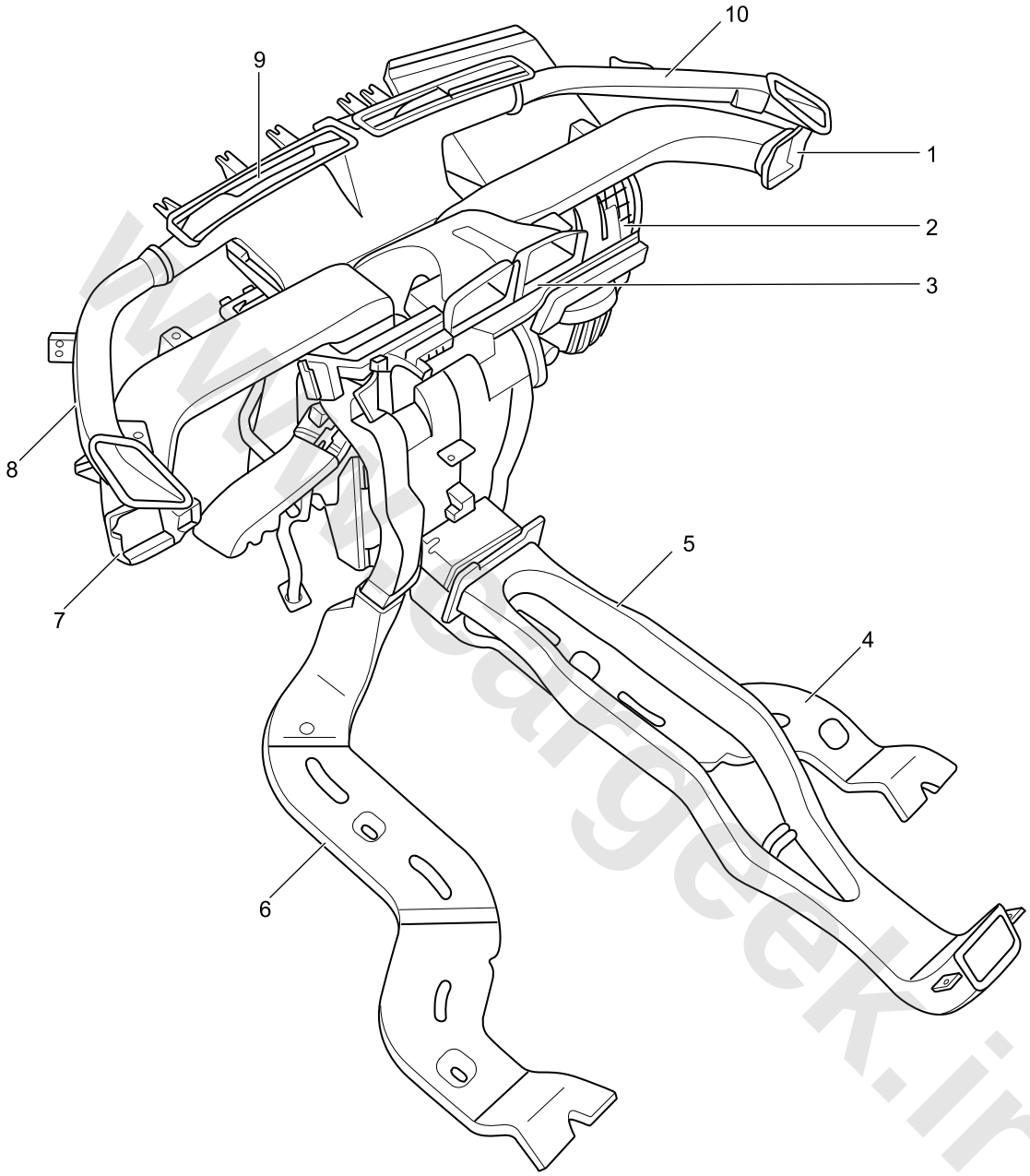

S3210184

1. Instrument Panel Air Duct - Right
2. Internal Circulation Inlet
3. Instrument Panel Air Duct - Face
4. Rear Seat Footwell Air Duct - Right
5. Rear Central Air Duct
6. Rear Seat Footwell Air Duct - Left
7. Instrument Panel Air Duct - Left
8. Front Window Air Duct - Left
9. Windshield Air Duct
10. Front Window Air Duct - Right

www.cargeek.ir

www.cargeek.ir

A/C Cooling System

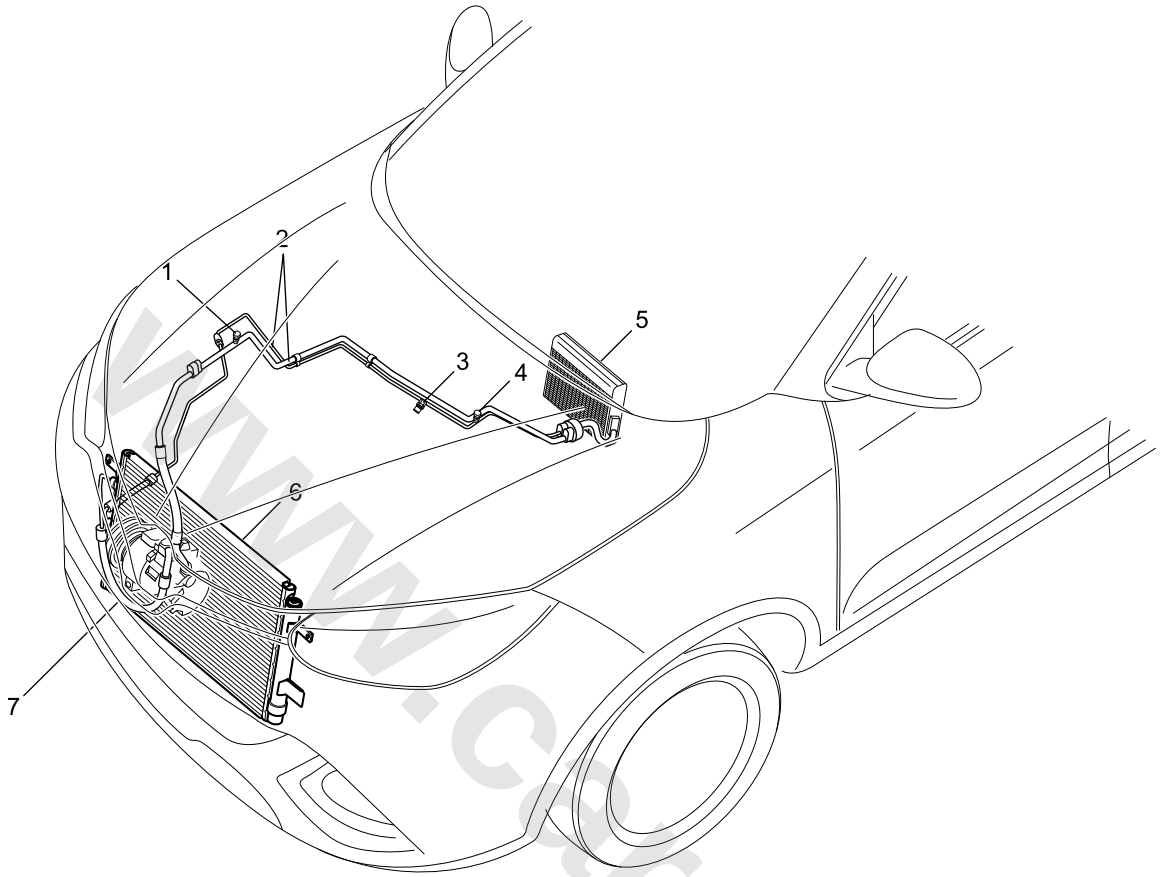

S3410193

1. Low Pressure Service Connector
2. A/C Pipe
3. A/C Pressure Sensor
4. High Pressure Service Connector
5. Evaporator and **TXV**
6. Condenser
7. Compressor

www.cargeek.ir

www.cargeek.ir

HVAC System

Description

Overview

The heating, ventilation and air conditioning system controls the vehicle interior temperature and air distribution. The system contains the A/C box assembly (A/C filter, heater assembly and evaporator box assembly), air duct, refrigerant pipe, controller and control panel. The air outlets are integrated in the luggage compartment. Fresh air flows into the A/C box assembly through the A/C filter assembly, and flows through the entire system by the blower operation. According to the setting on the control panel, the heated or cooled air is supplied to the air outlets of "face", "footwell" and "defrost" via the air distribution duct.

According to models, the vehicle will be provided with one of the two air conditioning systems, i.e. MTC or ATC:

- In the MTC system, functions such as the air circulation, air temperature, air distribution and blower speeds are selected manually, and the air temperature and air distribution are operated and controlled with cables.
- The ATC monitors and regulates the temperature, blower speed and air distribution automatically. The automatic mode provides an optimum system control and does not need any manual interference. Manual mode allows to ignore the automatic running of a single function for the purpose of fulfilling individual needs.

Both systems consist of a cooling system, an A/C box assembly and a control system. The **ATC** and MTC differ in the following ways, comparing with the MTC, the **ATC** contains an additional solar sensor, interior/exterior temperature sensor, heater core temperature sensor and temperature sensor for the air outlets of the face and footwell.

A/C Air Filter

The A/C air filter is above the A/C box blower, which is used to improve the quality of the fresh air supplied to the interior of the vehicle.

A/C Box Assembly

The A/C box assembly heats and distributes the fresh air or circulating air according to the mode selected on the control panel. The A/C box assembly is between the instrument panel and the front panel of the engine compartment. The A/C box includes the blower, A/C air filter, heater core, evaporator core and control damper. The passage in the A/C box assembly introduces air into the A/C box and divides it into three parts, air is delivered to the air outlets for the "face", "footwell" and "defrost". A fresh recirculating air damper is mounted on the A/C box assembly housing, which adjusts the vehicle interior air or outside air and takes it as the circulating air. The drain outlet at the bottom of the box body directs condensed water from the box body to the lower side of the vehicle.

The A/C box assembly controls air distribution and air temperature.

- The evaporator temperature sensor, face temperature sensor (**ATC** only) and footwell temperature sensor (**ATC**) output temperature signal to the **ATC**. The **ATC** uses it to control the output of the servo motor.
- The servo motor controls each control damper. It is outside the box and is controlled by the A/C controller. The feedback voltage meter of each servo motor provides the corresponding damper position signal for the A/C controller.
- The blower speed regulation resistor controls the blower speed.

Blower

The blower is on the heater box, which includes the motor and fan. Control of the blower air volume can be realized by using the button on the control panel to control the blower speed regulation resistor of the A/C box assembly.

Heater Core

The heater core heats the air inside the vehicle. The heater core mounted in the A/C box assembly is an aluminum unidirectional flat-tube heat exchanger. Two aluminum tubes extend through the front panel of the engine compartment and connect the A/C box assembly to the engine cooling system. When the engine works, coolant constantly flows through the heater core under the action of the coolant pump.

Recirculation Control Damper

The recirculation control damper opens and closes the fresh and recirculated air inlets to control the source of incoming air. The servo motor drive damper is controlled by the fresh/recirculated air switch on the control panel. The fresh/recirculated air servo motor is a unidirectional motor, and the connection between the motor drive and the cam of the damper control lever mechanism applies the wire rod. When the cam rotates 360°, the fresh/recirculated completes one cycle (fresh air® recirculated air® fresh air).

Blend Damper

The bend damper adjusts the air flowing through the heater core and controls the proportion of the cold/warm air in the A/C box assembly so that the driving temperature can be achieved.

Air Distribution Damper

The air distribution damper is used for the air outlets of the face, footwell and defrost. These dampers control the air flow from the blend damper to the air outlets, which connect the spindle that extends to the left side of the heater box where they are attached to a common control lever mechanism. To operate the air distribution damper, a mode servo motor

www.cargeek.ir

www.cargeek.ir

is fitted between the control lever mechanism and the air distribution switch on the control panel.

Distribution Duct

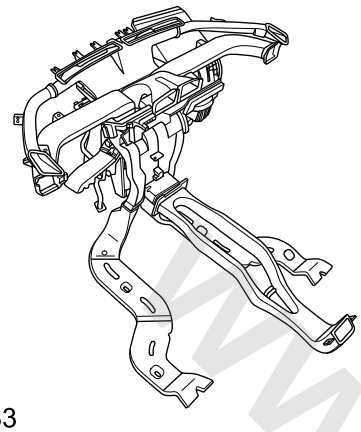

S3210183

The face air outlet of the rear seat footwell and instrument panel are fitted with an individual air distribution duct. Distribution ducts for the windshield and front side window are integrated in the instrument panel. The rear seat footwell pipe is connected to the interface on the front A/C box assembly and extends along the floor under the front seat.

By the four vent assemblies on the instrument panel and the two vent assemblies behind the center console, the passenger can control the face air and the air direction. Each vent assembly incorporates a thumbwheel to regulate flow and moveable vanes to control direction.

The air outlet for the front seat footwell is fitted in the port beside the A/C box assembly. The two rear floor vents (under the front seat) distribute air to the rear floor.

Body Relief Valve

The body relief valve allows the warm air and vent air to go through the passenger compartment freely. The body relief valve is located at both sides of the luggage compartment, which allows air in the passenger compartment to be discharged to the covered area between the body and the rear bumper. The body relief valve is a check valve, and each body relief valve contains grille covered by the soft rubber damper. The damper may open or close automatically according to the pressure difference between the passenger compartment and external environment.

www.cargeek.ir

www.cargeek.ir

www.cargeek.ir

Cooling System

A/C System Schematic

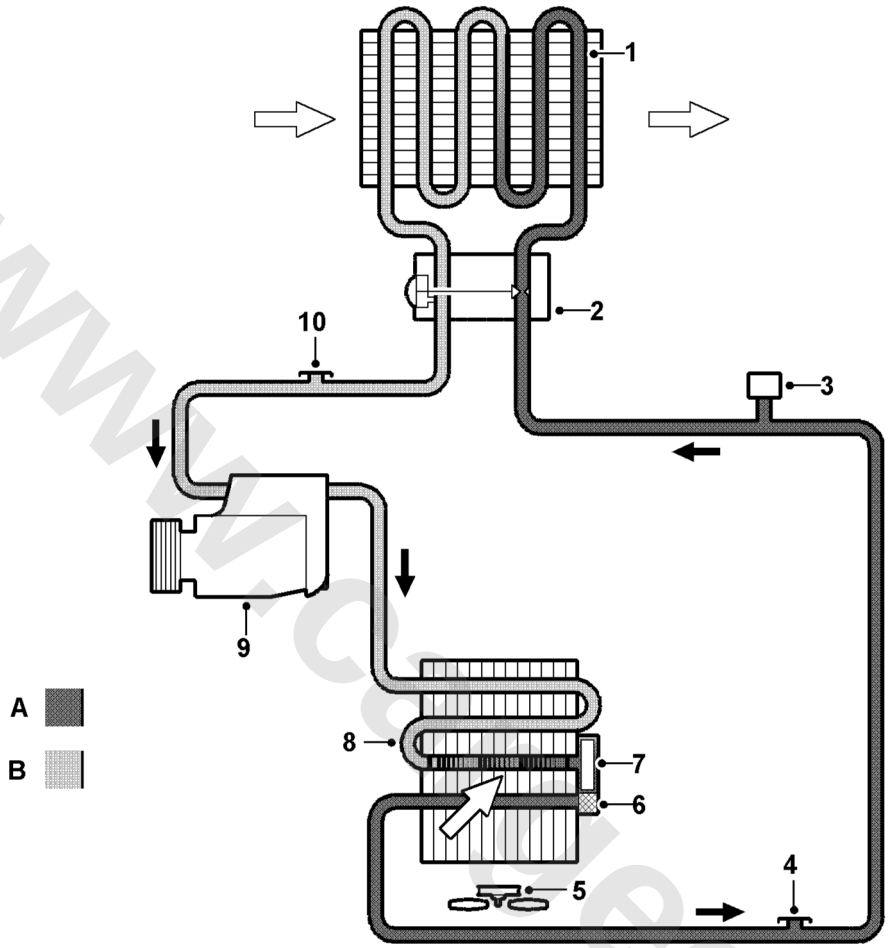

S462006

A= Liquid Coolant; B= Gas Coolant

1. Evaporator
2. **TXV**
3. A/C Pressure Sensor
4. High Pressure Service Connector
5. Cooling Fan
6. Filter
7. Desiccant
8. Condenser
9. A/C Compressor
10. Low Pressure Service Connector

The cooling system transfers heat from the vehicle to the outside atmosphere and provides the A/C box assembly with dehumidified cool air. The system comprises a compressor, a condenser, **TXV**, A/C pipes and an evaporator. The system is a closed loop which applies R134a refrigerant as the heat transfer medium. Add A/C oil to the refrigerant to lubricate the internal components of the compressor.

To accomplish the transfer of heat, the refrigerant is circulated around the system where it passes through two pressure/temperature modes. In each pressure/temperature mode, the state of the refrigerant changes. During this process, the refrigerant absorbs and releases maximum heat. The low pressure/temperature mode starts with the **TXV**, through the evaporator to the compressor, in the **TXV**, the refrigerant decreases in pressure and temperature, then it changes from moderate temperature liquid to low temperature vapour in the evaporator before absorbing heat from the ambient air of the evaporator. The high pressure/temperature mode starts with the compressor, through the condenser to the **TXV**, the pressure and temperature of the refrigerant increase as it passes through the compressor, then it releases heat to the atmosphere via the condenser and changes from high temperature vapour to moderate-high temperature liquid.

www.cargeek.ir

www.cargeek.ir

Compressor

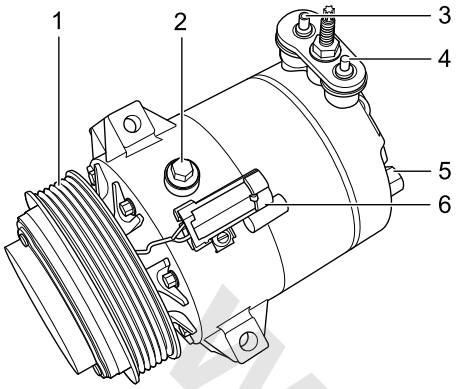

S3110047

1. Pulley
2. Oil Plug
3. Air intake port
4. Exhaust port
5. Relief Valve
6. Electromagnetic clutch connector

The compressor fitted on the engine is a variable displacement compressor. The compressor is driven by the electromagnetic clutch and pulley. The compressor circulates the coolant by compressing the low pressure/low temperature vapor from the evaporator and converting it into the high pressure/high temperature vapor to the condenser.

Condenser

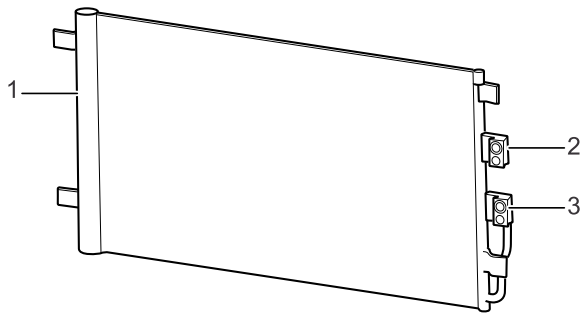

S3410113

1. Reservoir-drier
2. Air intake port
3. Liquid outlet port

The condenser transfers the coolant heat into the ambient air and changes the coolant vapor from the compressor into liquid. The condenser also removes moisture and solid impurities from the refrigerant and functions as a reservoir for liquid refrigerant so as to accommodate changes of heat load in the evaporator.

With the impact effect and/or cooling fan, the air passing through the heat exchanger absorbs heat from the refrigerant and changes the refrigerant from a vapor to liquid. The condenser cools and liquifies the refrigerant before it enters the modulator. In the modulator, most of the remaining gas in the refrigerant is separated. The refrigerant uses the desiccant and filter to remove moisture and particles before entering into the secondary cooler. The refrigerant is further cooled as it flows through the secondary cooler, this results in the refrigerant from the condenser outlet to the evaporator is almost 100% converted into liquid.

Thermostatic Expansion Valve (TXV)

TXV and Evaporator

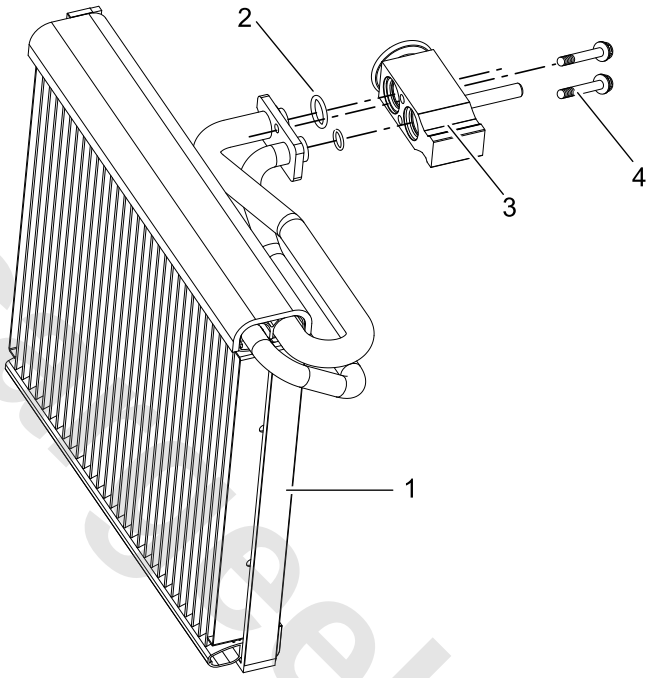

1. Evaporator
2. O-ring
3. TXV
4. Bolt

The TXV regulates the flow of the refrigerant and matches the refrigerant flow with the heat load of the air passing through the evaporator core. The TXV is mounted on the inlet and outlet ports of the evaporator. The valve consists of an aluminum housing containing inlet and outlet passages. A metering valve is fitted in the inlet passage and the metering valve is controlled by a temperature sensitive tube connected to a diaphragm. The top of the diaphragm is filled with refrigerant and senses evaporator outlet pressure and the tube senses evaporator outlet temperature. By regulating the opening of the thermostatic expansion valve, the force can be balanced, this keeps a proper temperature for the evaporator outlet and balances the refrigerant flow and the thermal load of the air.

www.cargeek.ir

Thermostatic Expansion Valve

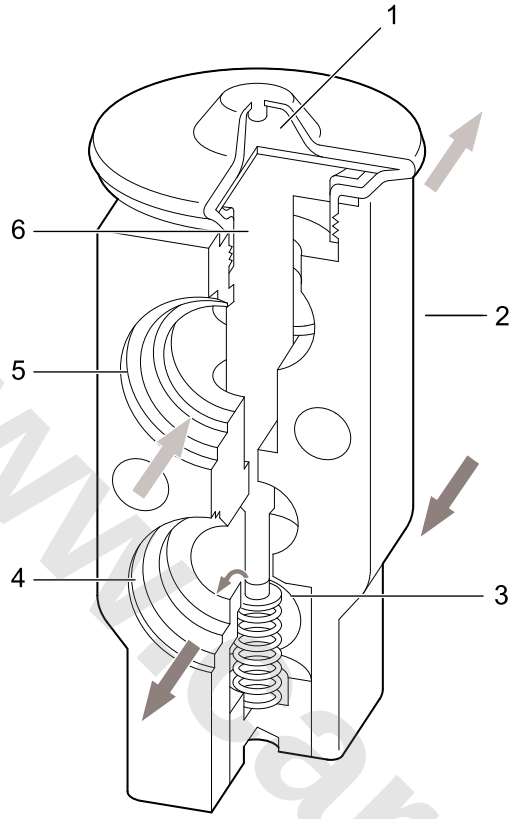

S462011

1. Membrane
2. Housing
3. Metering valve
4. Inlet Passage to Evaporator
5. Outlet Passage from Evaporator
6. Thermo-sensitive Tube

The liquid coolant flows from the metering valve to the evaporator. The metering valve reduces the pressure and temperature of the refrigerant, changes the solid stream of refrigerant into a fine spray and improves the evaporation effect. As the refrigerant passes through the evaporator, it absorbs heat from the ambient air flowing through the evaporator core. The increase of the temperature causes the refrigerant to vaporize and increases its pressure.

The temperature and pressure of the refrigerant from the evaporator drive the diaphragm and temperature sensitive tube to move and regulate the metering valve opening, by this way, the temperature and pressure control the volume of the refrigerant flowing through the evaporator. The warmer the air flowing through the evaporator core, the more heat available to evaporate refrigerant, and this allows more refrigerant to pass through the metering valve.

Evaporator

The evaporator is in the A/C box assembly, which absorbs heat from the exterior or recirculated inlet air. Low pressure and low temperature refrigerant changes from liquid to vapour in the evaporator, absorbing large quantities of heat during this process.

A/C Pipeline

Aluminium A/C pipelines connect the system components together and O rings are fitted between the connections to ensure a secure seal. To maintain a similar flow velocity in the system, the diameter of the refrigerant lines may vary so as to suit the two pressure/temperature modes. The pipelines with larger diameters are fitted in the low pressure/temperature mode and those with smaller diameters are fitted in the high pressure/temperature mode, and integrate the refrigerant refill port into the A/C pipelines so as to facilitate the system service.

www.cargeek.ir

Operation

Overview

To run the cooling system, the **A/C ECU** shall communicate with the **ECM**. The **ECM** controls the engagement of the compressor clutch and the speed of the engine cooling fan. The **A/C ECU** also controls the blower speed of the heater, intake air, air temperature and air distribution.

Blower Control

The blower control module connects the blower power output terminal to different ground terminals, the appropriate operating voltages are thus produced. The blower control module can only provide the blower with the battery voltage and allow it to operate at maximum speed.

Intake

When pressing the circulation control switch, the switch will ground the control panel. Then the circulation control motor turns the control damper of the heater assembly to close the fresh air inlet and open the circulating air inlet. Press the circulation control switch again, the circulation control motor turns the circulating air ground to the fresh air ground. Then the circulation control motor turns the control damper of the heater assembly to open the fresh air inlet and close the circulating air inlet.

The circulation control motor shifts the damper to external circulation mode.

Air Temperature

The blend damper servo motor of the fan heater on the fan heater assembly is controlled by turning the temperature knob switch on the control panel. The blend damper changes the ratio of air flowing through the fan heater bypass and the heater core body. The ratio varies between "all bypass without heater" and "all heater without bypass" so as to fit the position of the knob switch.

Air Distribution

Use the 4 air distribution switches on the control panel to operate the mode damper servo motor and turn the air distribution damper in the heater assembly so that air can be introduced into the corresponding air outlet around the passenger compartment.

A/C Pressure Sensor

The A/C pressure sensor monitors the pressure of the A/C system and sends signals to the **ECM**. The **ECM** controls the cooling fan speed and protects the compressor, etc. The pressure sensor performs the following operations:

1. If the specified refrigerant pressure is met, the **ECM** sends commands for engaging the A/C compressor clutch.
2. If the refrigerant pressure is below or above the pressure limit, the **ECM** sends commands for disengaging the A/C compressor clutch.
3. If the refrigerant pressure is greater than the specified value, the **ECM** sends commands for adjusting the cooling fan speed and operating the cooling fan at high/low speed according to the pressure value.

Pressure protection of the pressure switch:

	High Voltage Protection	Low Voltage Protection
MPa	≥3.14	≤0.196

Thus, if the A/C pressure is lower than or exceeds one of the closing pressure thresholds, the ground path of the **ECM** will be disconnected. This causes the **ECM** to disengage the A/C compressor clutch.

The compressor is lubricated by oil suspended in the refrigerant, so operation of the compressor shall be prevented if the refrigerant/lubricant in the system are minimum due to minimum refrigerant pressure.

When the refrigerant pressure increases to a value that indicates additional condensing is required, the **ECM** grounds the cooling fan relay unit and requests for the corresponding cooling fan speed.

Failure

If the sensor fails, the driver may notice that the A/C system does not operate at all or it stops after running for a period of time.

The sensor may have the following faults:

- Low refrigerant pressure due to leak or wrong refrigerant refilled
- High refrigerant pressure due to wrong refrigerant refilled
- Internal wire is short circuit.
- External wire is open.
- External wire is short to the 12V power supply.
- Ground of the sensor is missing.

Compressor

When the engine is running and A/C is off, the clutch is de-energized, the pulley and the drive belt freewheel. Balance the vapour pressure in the compressor housing, the spring between the carriage and the swash plate fixes the swash plate with a minimum angle of inclination so as to reduce the load during the start-up of the system.

When the A/C is requested, the clutch is energized and the pulley turns the shaft. The lug plate and the swash plate turn with the shaft, and the angled swash plate allows the piston

www.cargeek.ir

to produce reciprocating movement. Vapour from the inlet pressure chamber is drawn into the cylinders, compressed, and discharged into the outlet pressure chamber, producing a flow around the refrigerant circuit. The flow rate in the compressor depends on the piston stroke, which is controlled by the inclination angle of the swash plate. The inclination angle of the swash plate is set by the servo pressure and the compressor inlet pressure acted on the piston in its intake stroke. When the relevant intake pressure exceeds the servo pressure, the piston moves along its cylinder to increase the angle of inclination, piston stroke and flow rate. Similarly, when the relevant intake pressure drops below the servo pressure, the piston moves along its cylinder to decrease the angle of inclination, piston stroke and flow rate.

When starting, the compressor inlet pressure is relatively low. In the control valve, the baffle plate and push rod keep the ball valve open. This allows the restricted flow of the outlet pressure enter into the swash plate chamber through the ball valve and the minimum inclination angle of the swash plate is maintained. When the refrigerant flows through the evaporator and absorbs heat (i.e. when the heat load increases), the vapour pressure entered into the compressor will increase. In the control valve, the increased inlet pressure will move the baffle plate and the push rod to switch off the ball valve. When the pressure of the swash plate chamber decreases and the intake pressure increases, the piston will move the swash plate in its intake stroke to increase the inclination angle, piston stroke and the flow rate in the compressor. When the heat load of the evaporator decreases, the pressure of the vapour entered into the compressor will reduce to open the control valve. This will increase the pressure of the swash plate chamber, and thus reduces the inclination angle of the swash plate and the flow rate in the compressor.

A/C Compressor Clutch Relay

A 12V power supply is supplied to the A/C compressor clutch via the engine compartment fuse. When the main relay is energized, the relay coil of the A/C compressor clutch can be activated. The relay coil ground is controlled by the **ECM**, which completes the ground when an A/C On request message is received.

Failure

If the A/C compressor clutch relay fails, the followings will occur:

- The clutch does not engage the compressor pulley (visual check).
- High intake air temperature.

The A/C compressor clutch relay may have the following malfunctions:

- Relay coil is short-circuited.
- Relay coil is open.
- Relay coil has a high resistance.
- Relay contact is disconnected.
- Relay contact is closed.
- Relay contact has a high resistance.
- Relay wire is open.
- Relay wire has a high resistance.
- Relay wire is short to the 12V power supply.
- Relay wire is short to ground.
- **ECM** does not provide ground.

If the A/C compressor clutch does not engage, but the A/C switch is in "On" position, remove the compressor clutch relay and conduct a test.

www.cargeek.ir

Service Procedures

Refrigerant Recovery and Refill

Refrigerant Reccovery

1. Connect the high-pressure side hose with a quick disconnection interface to the high-pressure service side connector of the air-conditioning system.

Tip: Use refrigerant tank designed only for service station. Overcharging restraint system is designed based on this kind of refrigerant tank. The tank valve is also designed for the restraint system.

2. Open the interface valve.
3. Connect the low-pressure side hose with a quick disconnection interface to the low-pressure service side connector of the air-conditioning system.
4. Open the interface valve.
5. Check the high-pressure side and low-pressure side gauges on the control panel of the refilling station, and ensure there is pressure in the A/C. If there is no pressure, there is recoverable refrigerant in the system.
6. Open the valves for the high-pressure side and low-pressure side.
7. Open the gas and liquid valves on the refrigerant reservoir.
8. Drain the refrigerant in the oil separator.
9. Close the drain valve.
10. Connect the refilling station to the appropriate power socket.
11. Connect the main power switch.

Caution: Reuse the recycled lubrication is prohibited. The recycled lubrication will damage the equipment.

Caution: Part of A/C lubrication (PAG) could be recycled together with refrigerant but service station can separate lubrication from refrigerant to calculate the quantity of lubrication.

12. Start the recovery. For information about the refilling station, refer to the manufacturer's instructions for use.
13. Wait for 5min before checking the low-pressure side gauge on the control panel. If the air conditioning system is capable of keeping vacuum, the recovery is completed.

Warning: If warning indicator illuminates, it means the tank is overfull and service station will stop, install a new empty tank to continue this process. The different type of tank is prohibited using.

14. If the pressure at the low-pressure side starts to rise from 0, there remains refrigerant in the system. Recover the residual refrigerant. Repeat this step until the system can keep vacuum for 2 minutes.

Drain

1. Check whether the high-pressure side and low-pressure side hoses are connected to the air conditioning system. Open the high/low-pressure side valves on the refilling station control panel.
2. Open the gas and liquid valves on the refrigerant reservoir.

Caution: The evacuating procedure must be carried out before recharging process.

3. Start the vacuum pump and start the drain process. In the process of recirculation, non-condensable gases (mostly air) will be automatically exhausted from the reservoir. A sound of pressure release may be heard.
4. Check the system for leak. For information about the refilling station, refer to the manufacturer's instructions for use.

A/C Lubricating Oil Refill

At this time, the lubricating oil discharged from the air conditioning system during recovery must be supplemented.

Note:

- Always keep the lubricating oil bottle cap tight to prevent moisture or contaminants from entering the lubricating oil.
- This operation requires a vacuum air conditioning system. It is forbidden to open the lubricating oil filling valve when the air conditioning system is at positive pressure. This will result in backflow of lubricating oil through the bottle air vent.
- An oil level lower than the suction pipe is prohibited when refilling or supplementing lubricating oil; otherwise, air will enter the air conditioning system.

1. Use the special polyether type lubricating oil (contained in graduated bottle) for R-134a system.
2. For information about the refilling station, refer to the manufacturer's instructions for use. Add an appropriate amount of lubricating oil to the A/C system.
3. When the oil refilled reaches the required point, close the valve.

Refill

Caution: The evacuating procedure must be carried out before recharging process.

1. Close the low-pressure side valve on the control panel.
2. Open the high-pressure side valve on the control panel.
3. For information about the refilling station, refer to the manufacturer's instructions for use.
4. Refill refrigerant of the required amount into the air conditioner, and ensure the unit of measurement is

www.cargeek.ir

HVAC System

correct, for example, kg or lb.

5. Start refill.

Whether the Refrigerant Refilling is Successful

Refrigerant Refill Completion

1. Close the high-pressure side valves on the refilling station control panel. Both valves shall be closed.
2. Start the vehicle and air conditioning system.
3. Keep the engine running until the readings on the high-pressure side pressure gauge and the low-pressure side pressure gauge are stable.
4. Compare the readings with the system specifications.
5. Check the outlet temperature of the evaporator, and ensure that the air conditioning system operation conforms to the system specifications.
6. Keep the air conditioner running.
7. Close the high-pressure side interface valve.
8. Disconnect the high-pressure side hose from the vehicle.
9. Open the valves of the high/low-pressure side on the control panel. The system will quickly suck in refrigerant from two hoses through the low-pressure side hose.
10. Close the low-pressure side interface valve.
11. Disconnect the low-pressure side hose from the vehicle.

Refrigerant Refill Failure

Sometimes, the refrigerant is not completely refilled into the air conditioning system. There are two reasons:

1. The pressure of the refrigerant reservoir in the refilling station is close to that of the A/C system,
   - which leads to slow oil delivery.
   - For information about the refilling station, refer to the manufacturer's instructions for use.
2. There is not enough refrigerant in the refrigerant reservoir of the refilling station.
   - Therefore, part of the refrigerant refilled must be recovered from the vehicle, then drain the air conditioning system before refilling.
   - For information about the refilling station, refer to the manufacturer's instructions for use.

www.cargeek.ir

www.cargeek.ir

Compressor

Remove

1. Disconnect the battery negative.
2. Recover the air conditioning refrigerant.

☞ **A/C Refrigerant Recovery**

3. Raise the vehicle on a lift.
4. Remove the engine auxiliary drive belt.

☞ **Engine Auxiliary Drive Belt Remove**

5. Remove 3 bolts fixing the steering pump idler to the bracket.

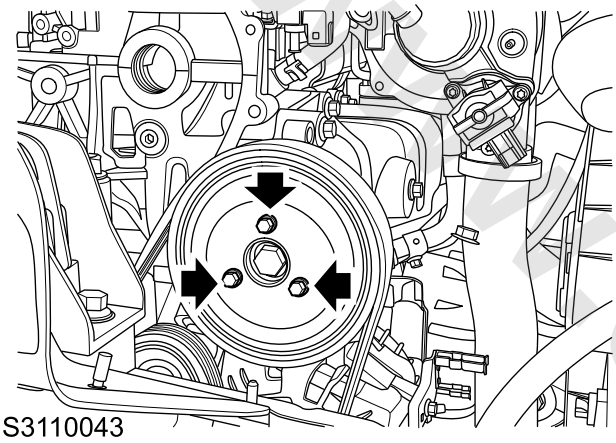

6. Remove the turbocharger solenoid valve.

☞ **Turbocharger Solenoid Valve Remove**

7. Disconnect the connector (2) of the compressor clutch.
8. Remove 2 nuts (3) fixing the A/C pipe to the compressor and release the A/C pipe from the compressor.

Caution: Always fit plugs to open connections to prevent contamination.

9. Remove and discard the O-ring of the A/C pipe.
10. Remove 3 bolts (1) securing the A/C compressor and engine.

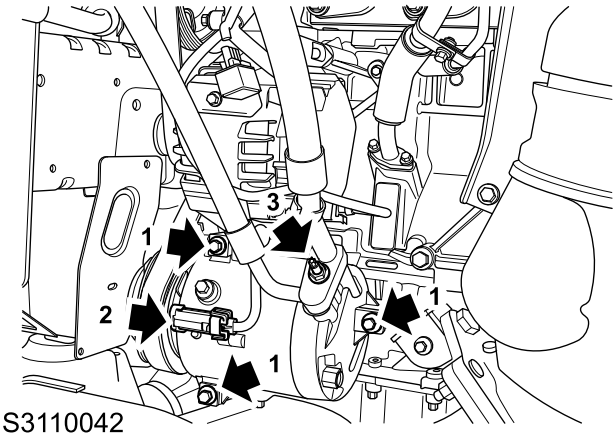

11. Slowly move the compressor in the engine compartment to remove it.

Refit

1. Fix the A/C compressor to the engine, fit the bolts, tighten to **19–25Nm** in the sequence of A–B–C, and check the torque.

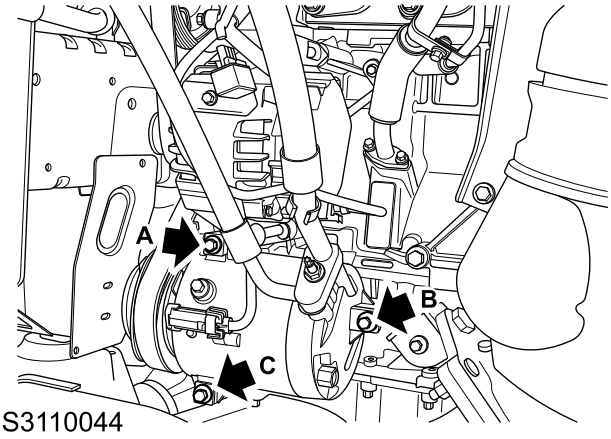

2. Remove the plug, fit a new seal ring to the A/C pipeline, and coat with clean compressor oil.
3. Fit the A/C pipe to the compressor, fit the nut, tighten to **19-25Nm** and check the torque.
4. Connect the connector of compressor clutch.
5. Fit the turbocharger solenoid valve.

☞ **Turbocharger Solenoid Valve Refit**

6. Fix the steering pump idler to the bracket, fit 3 bolts, tighten to **22–28Nm**, and check the torque.
7. Fit the engine auxiliary drive belt.

☞ **Engine Auxiliary Drive Belt Refit**

8. Lower the vehicle.
9. Refill the A/C refrigerant.

☞ **A/C Refrigerant Refill**

10. Connect the battery negative.

www.cargeek.ir

Compressor–1.5T

Remove

1. Disconnect the battery negative cable.
2. Recycle the air conditioning system refrigerant.

Recycling of Air Conditioning System Refrigerant

3. Remove the bottom deflector.

Bottom Deflector Remove

4. Disconnect the connector (2) of compressor electromagnetic clutch.
5. Remove one bolt (1) securing the hose assembly to the compressor, and disconnect the connection.

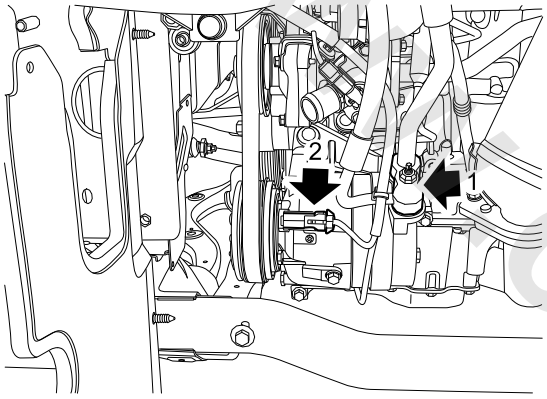

S3110057

6. Remove 3 bolts fixing the compressor to the compressor bracket.

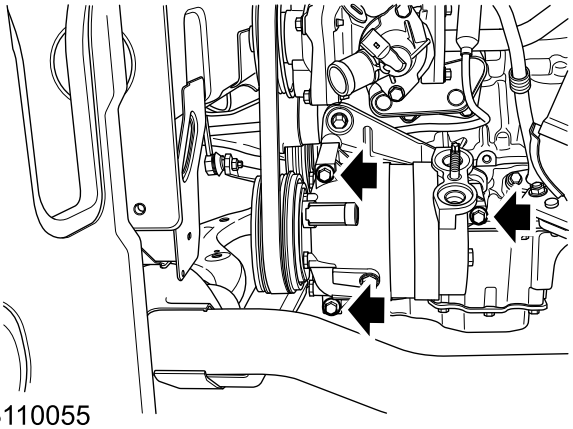

S3110055

7. Move the compressor slowly in the engine compartment and remove it.

Refit

1. Fit the compressor to the vehicle.
2. Fix the compressor to the compressor bracket, fit 3 screws, tighten it to **19–25Nm**, and check the torque.
3. Fix the hose to the compressor, fit 1 nut, tighten it to **19-25Nm**, and check the torque.
4. Connect the connector of compressor electromagnetic clutch.
5. Fit bottom air deflector.

Bottom Deflector Refit

6. Refill the air conditioning system refrigerant.

Air Conditioning System Refrigerant Refill

7. Connect the battery negative cable.

www.cargeek.ir

Compressor Bracket-1.5T

Remove

1. Remove the compressor assembly.

Compressor Assembly Remove

2. Remove 3 bolts fixing the compressor bracket to the engine.

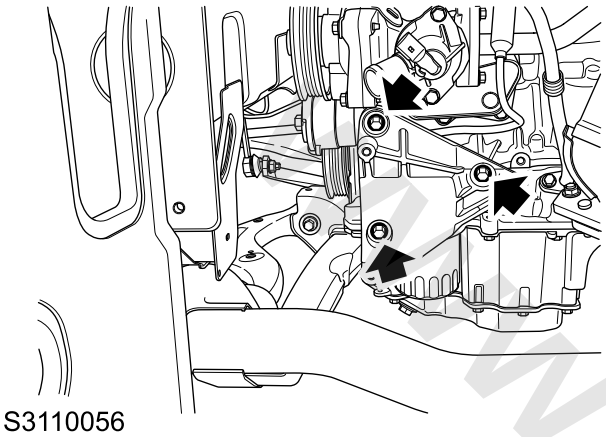

3. Remove the compressor bracket from the vehicle.

Refit

1. Secure the compressor bracket to the engine, fit 3 bolts and tighten them to **19–25Nm**.
2. Fit the compressor assembly.

Compressor Assembly Refit

Evaporator

Remove

1. Remove the heater assembly.

Heater Assembly Remove

2. Remove the heater core.

Heater Core Remove

3. Remove the TXV.

TXV Remove

4. Remove the blower assembly.

Blower Assembly Remove

5. Remove the clip and screw fixing the guide pipe of the intake air to the heater.
6. Remove the screw and clip securing the vent box and heater, and remove the vent box.
7. Remove the clip and screw securing the heater, and disconnect the heater box.
8. Remove the evaporator assembly.

Refit

1. Fit the evaporator to heater assembly.
2. Fit the heater box and secure with clips and screws.
3. Secure the vent box on the heater box, and secure with screws and clips.
4. Fix the guide pipe of the intake air to the heater box, and secure with screws.
5. Fit the blower assembly.

Blower Assembly Refit

6. Fit the heater core.

Heater Core Refit

7. Fit the TXV.

TXV Refit

8. Fit the heater assembly.

Heater Assembly Refit

www.cargeek.ir

Expansion Valve

Remove

1. Recover the A/C refrigerant.

A/C Refrigerant Recovery

2. Remove 1 nut fixing the A/C hard pipe to the TXV and disconnect the pipe.

Caution: Always fit plugs to open connections to prevent contamination.

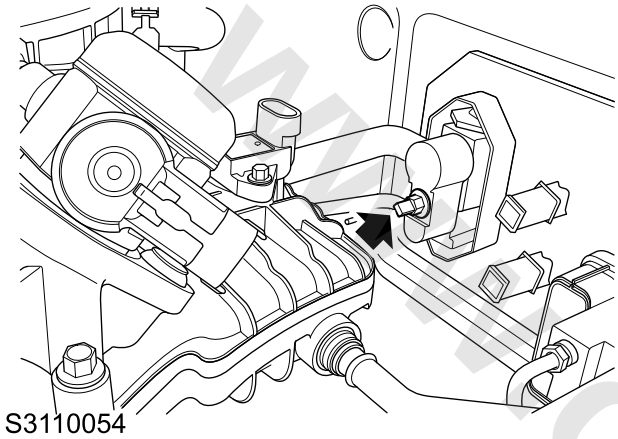

S3110054

3. Remove and discard the O ring.
4. Remove 2 bolts fixing the TXV to the A/C box and remove the TXV.

Caution: Always fit plugs to open connections to prevent contamination.

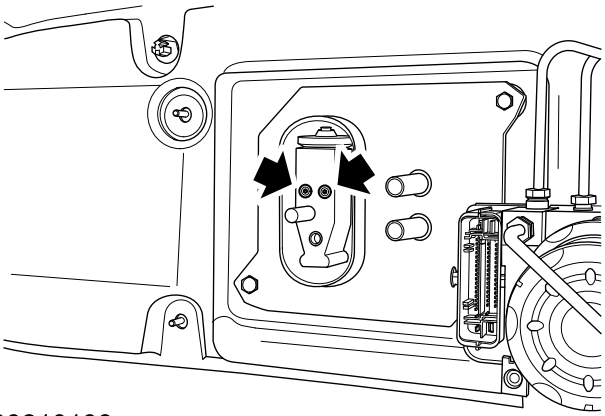

S3210138

5. Remove and discard the O ring.

Refit

1. Renew the O ring, and fit it to the evaporator core pipe.
2. Fit the TXV bracket to the evaporator core, fit 2 bolts, tighten to **5.5Nm** and check the torque.
3. Renew the O ring, and fit it to the air conditioning hard pipe assembly.
4. Fit the A/C hard pipe assembly to the TXV, fit 1 nut, tighten to **18–22Nm** and check the torque.
5. Refill the A/C refrigerant.

A/C Refrigerant Refill

Condenser

Remove

1. Disconnect the battery negative.
2. Recover the A/C refrigerant.

A/C Refrigerant Recovery

3. Remove the cooling fan assembly.

Cooling Fan Assembly Remove

4. Remove the front bumper assembly.

Front Bumper Assembly Remove

5. Remove 1 nut (2) securing the A/C hard pipe assembly (condenser) on the condenser.

Caution: Always fit plugs to open connections to prevent contamination.

6. Remove the nut (1) securing the A/C pipe (compressor/condenser) on the condenser.

Caution: Always fit plugs to open connections to prevent contamination.

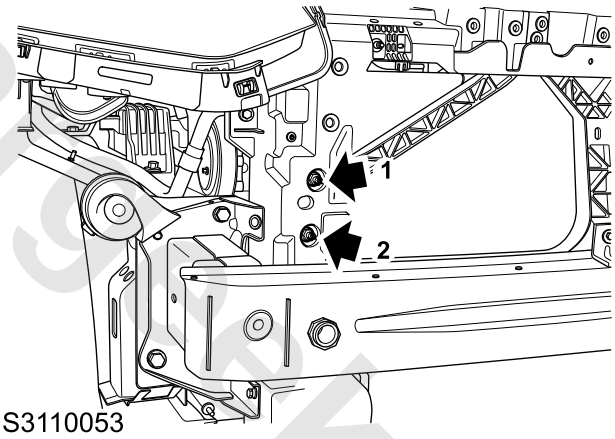

S3110053

7. Remove the upper radiator beam.

Upper Radiator Beam Remove

8. Remove the condenser from the radiator groove.

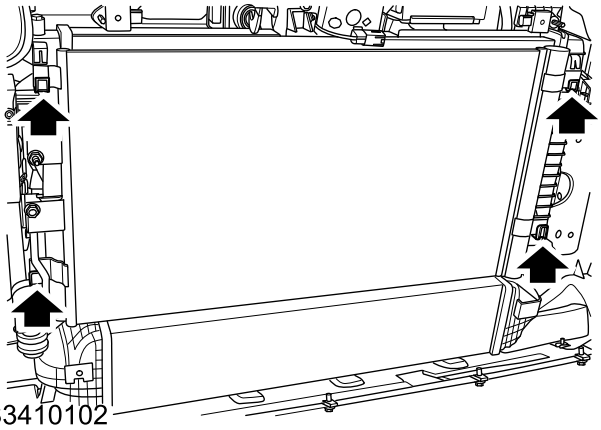

S3410102

Refit

1. Fix the condenser to the radiator groove.

www.cargeek.ir

2. Fit the upper radiator beam.

Upper Radiator Beam Refit

3. Secure the compressor exhaust hose to the condenser, fit 1 nut, tighten it to **19–25Nm**, and check the torque.
4. Secure the A/C hard pipe assembly (condenser) on the condenser, fit the nut, tighten to **19–25Nm** and check the torque.
5. Fit the front bumper.

Front Bumper Refit

6. Fit the cooling fan assembly.

Cooling Fan Assembly Refit

7. Refill the A/C refrigerant.

A/C Refrigerant Refill

8. Connect the battery negative.

A/C Pressure Sensor

Remove

1. Disconnect the battery negative.
2. Recover the air conditioning refrigerant.

A/C Refrigerant Recovery

3. Disconnect the connector of the A/C pressure sensor.

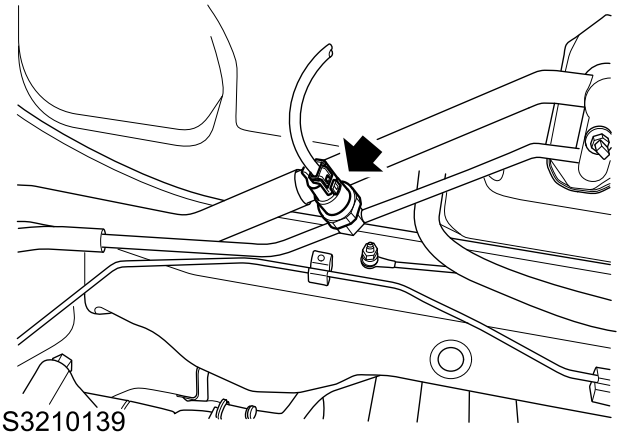

4. Remove the A/C pressure sensor from the A/C high pressure pipe and discard the O ring.

Caution: Always fit plugs to open connections to prevent contamination.

Refit

1. Lubricate the new O ring with clean A/C oil.
2. Fit the O ring to the A/C pressure sensor.
3. Fit the A/C pressure sensor to the A/C high-pressure pipe and secure it.
4. Connect the connector of the A/C pressure sensor.
5. Refill the A/C refrigerant.

A/C Refrigerant Refill

6. Connect the battery negative.

www.cargeek.ir

A/C Pipe - Compressor/Condenser

Remove

1. Recover the air conditioning refrigerant.

☞ **A/C Refrigerant Recovery**

2. Remove the front bumper assembly.

☞ **Front Bumper Assembly Remove**

3. Remove the nut (1) securing the A/C pipe (compressor/condenser) on the condenser, and disconnect the pipe from the condenser.

Caution: Always fit plugs to open connections to prevent contamination.

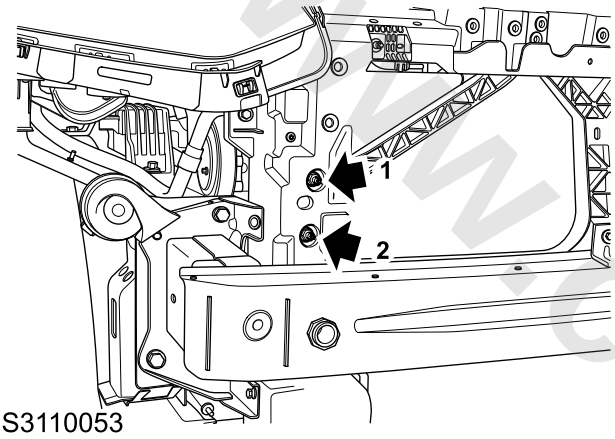

S3110053

4. Remove the O ring from the evaporator/compressor pipe and discard it.
5. Remove the nut (3) the A/C pipe (compressor/condenser) on the compressor, and disconnect the pipe from the compressor.

Caution: Always fit plugs to open connections to prevent contamination.

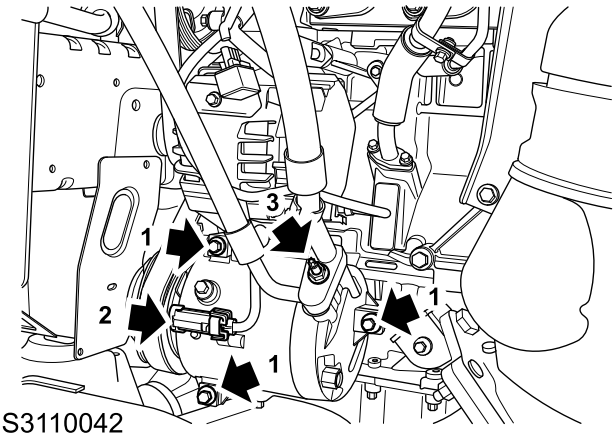

S3110042

6. Remove the O ring from the A/C pipe (compressor/compressor) and discard it.

Refit

1. Renew the O ring, and fit it to the A/C pipe (compressor/condenser).
2. Secure the A/C pipe (compressor/condenser) on the compressor, fit the nut, tighten to **19-25Nm** and check the torque.
3. Renew the O ring, and fit it to the A/C pipe (compressor/condenser).
4. Secure the A/C pipe (compressor/condenser) on the condenser, fit the nut, tighten to **19–25Nm** and check the torque.
5. Fit the front bumper assembly.

☞ **Front Bumper Refit**

6. Refill A/C refrigerant.

☞ **A/C Refrigerant Refill**

www.cargeek.ir

A/C Pipe A - Evaporator Compressor

Remove

1. Recover the air conditioning refrigerant.

☞ **A/C Refrigerant Recovery**

2. Remove the turbocharger intake hose.

☞ **Turbocharger Intake Hose Remove**

3. Remove the nut (3) fixing A/C pipe A (evaporator/compressor) to the compressor, and disconnect the pipe from the compressor.

Caution: Always fit plugs to open connections to prevent contamination.

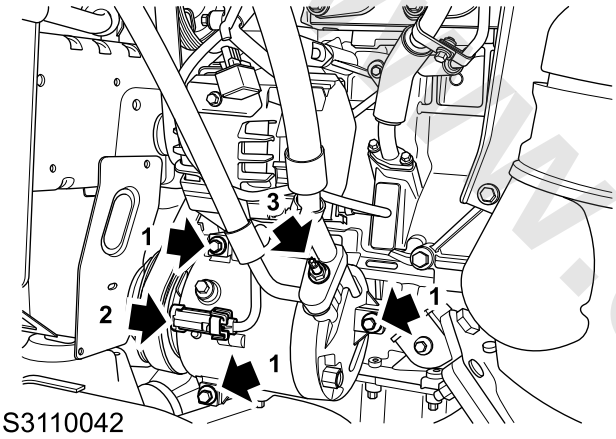

S3110042

4. Remove the O ring from the evaporator/compressor pipe and discard it.
5. Remove the nut connecting A/C pipe A (evaporator/compressor) and A/C hard pipe, and disconnect the pipe.

Caution: Always fit plugs to open connections to prevent contamination.

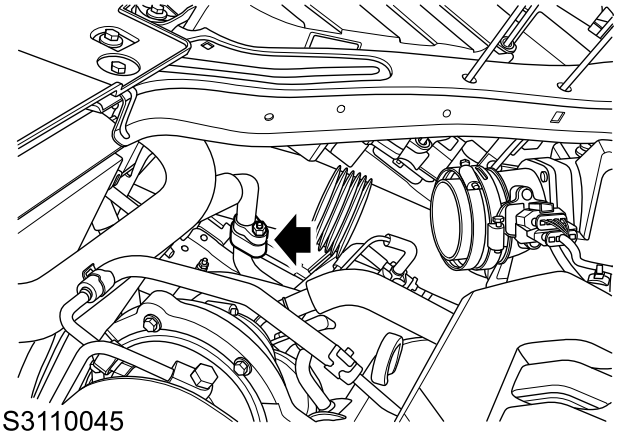
S3110045

6. Remove the O ring from the evaporator/compressor pipe and discard it.
7. Remove the pipe from the vehicle.

Refit

1. Remove the plug, fit a new seal ring to the A/C pipeline, and coat with clean compressor oil.
2. Tighten the nut connecting A/C pipe B (evaporator/compressor) and A/C pipe A (evaporator/compressor) to **7 - 10 Nm**, and check the torque.
3. Remove the plug, fit a new seal ring to the A/C pipeline, and coat with clean compressor oil.
4. Secure A/C pipe A (evaporator/compressor) on the compressor, fit the nut, tighten to **19-25Nm** and check the torque.
5. Fit the turbocharger intake hose.

☞ **Turbocharger Intake Hose Refit**

6. Refill the A/C refrigerant.

☞ **A/C Refrigerant Refill**

www.cargeek.ir

A/C Pipe B - Evaporator Compressor

Remove

1. Recover the air conditioning refrigerant.

☞ **A/C Refrigerant Recovery**

2. Disconnect the battery negative.
3. Remove the air filter assembly.

☞ **Air Filter Assembly Remove**

4. Remove the turbocharger intake hose.

☞ **Turbocharger Intake Hose Remove**

5. Disconnect the connector of the A/C pressure sensor.

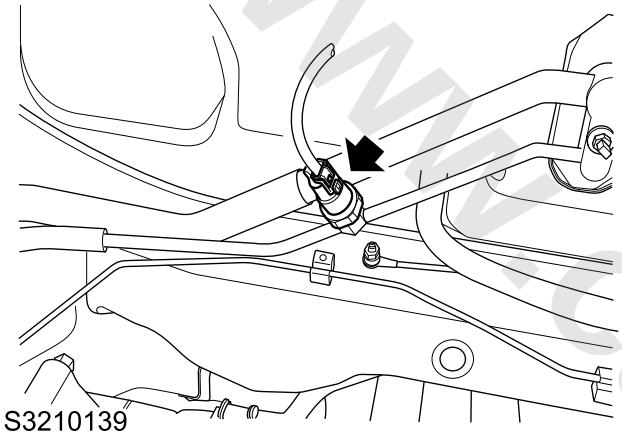

S3210139

6. Remove the front bumper assembly.

☞ **Front Bumper Assembly Remove**

7. Remove the nut fixing the A/C hard pipe assembly to the TXV and disconnect the pipe.

Caution: Always fit plugs to open connections to prevent contamination.

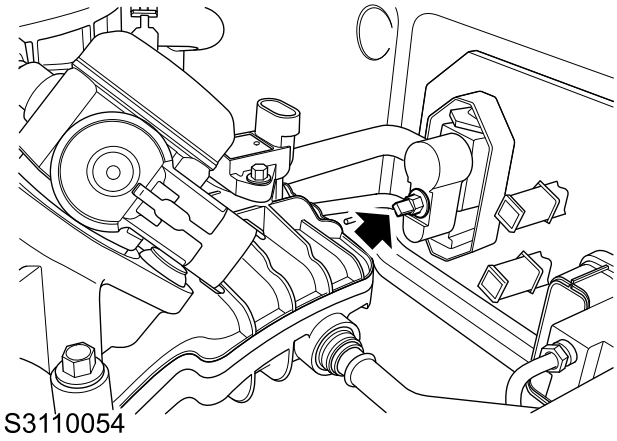

S3110054

8. Remove and discard the O ring of the pipe.
9. Remove the nut connecting A/C pipe A (evaporator/compressor) and A/C pipe B (evaporator/compressor).

Caution: Always fit plugs to open connections to prevent contamination.

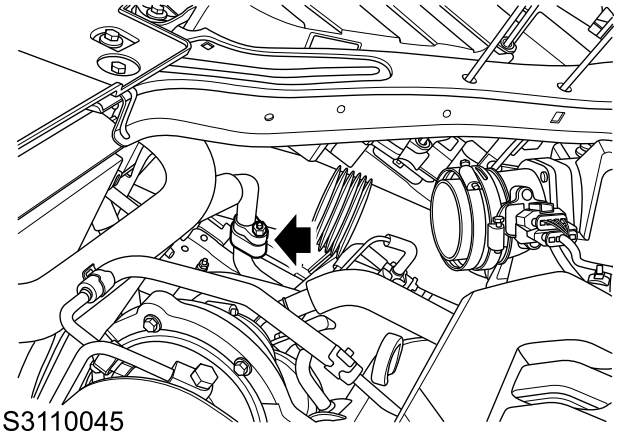

S3110045

10. Remove and discard the O ring of the pipe.
11. Remove the nut (2) securing A/C pipe B (evaporator/compressor) on the condenser.

Caution: Always fit plugs to open connections to prevent contamination.

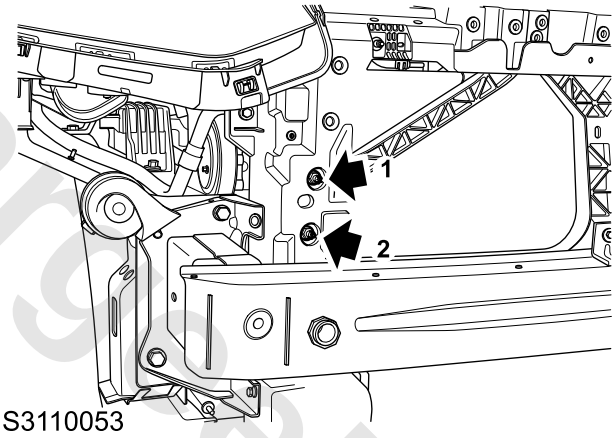

S3110053

12. Remove and discard the O ring of the pipe.
13. Remove 2 clips securing the A/C hard pipe assembly on the body.

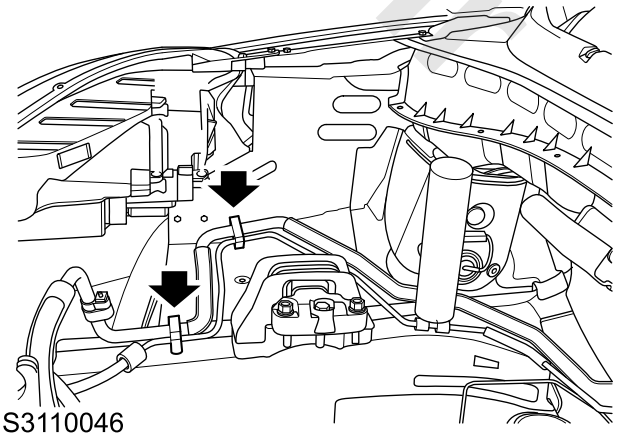

S3110046

14. Remove A/C pipe B (evaporator/compressor) from the vehicle.

Refit

1. Fit A/C pipe B (evaporator/compressor) to the vehicle.

www.cargeek.ir

2. Fit A/C pipe B (evaporator/compressor) to the body, and secure with clips.
3. Remove the plug, fit a new seal ring to the A/C pipeline, and coat with clean compressor oil.
4. Secure A/C pipe B (compressor/condenser) on the condenser, fit the nut, tighten to **19–25Nm** and check the torque.
5. Remove the plug, fit a new seal ring to the A/C pipeline, and coat with clean compressor oil.
6. Tighten the nut connecting A/C pipe B (evaporator/compressor) and A/C pipe A (evaporator/compressor) to **7 - 10 Nm**, and check the torque.
7. Remove the plug, fit a new seal ring to the A/C pipeline, and coat with clean compressor oil.
8. Secure A/C pipe B (evaporator/compressor) on the TXV, fit 1 nut, tighten to **18–22Nm** and check the torque.
9. Fit the front bumper assembly.

Front Bumper Assembly Refit

10. Connect the connector of the A/C pressure sensor.
11. Fit the turbocharger intake hose.

Turbocharger Intake Hose Refit

12. Fit the air filter assembly.

Air Filter Assembly Refit

13. Refill the A/C refrigerant.

A/C Refrigerant Refill

14. Connect the battery negative.

A/C Filter Cover

Remove

1. Remove the glove box assembly.

Glove Box Assembly Remove

2. Release the clip fixing the filter cover to the A/C box, and remove the filter cover.

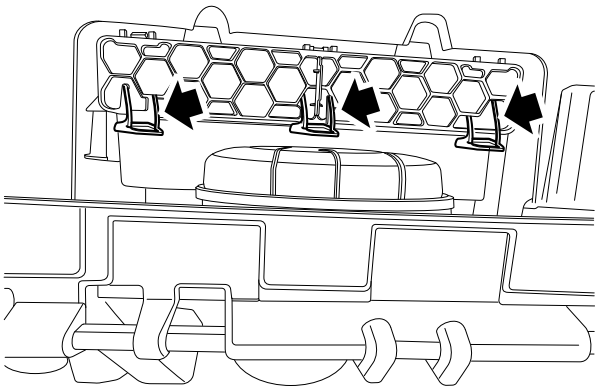

S3210159

Refit

1. Fit the filter cover to the A/C box assembly and secure with clips.
2. Fit the glove box assembly.

Glove Box Assembly Refit

www.cargeek.ir

Air Filter Element

Remove

1. Remove the cover of the A/C filter.

☞ **A/C Filter Cover Remove**

2. Remove the A/C filter element.

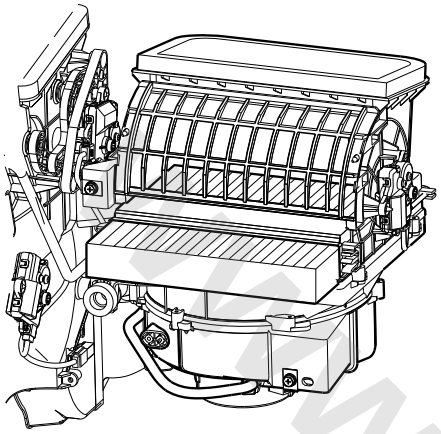

Refit

1. Fit a new filter element to the A/C.
2. Fit the filter cover to the A/C box assembly and secure with clips.
3. Fit the glove box assembly.

☞ **Glove Box Assembly Refit**

Heater Assembly

Remove

1. Disconnect the battery negative.
2. Drain the engine cooling system.

☞ **Engine Cooling System Drain**

3. Recover the air conditioning refrigerant.

☞ **A/C Refrigerant Recovery**

4. Remove the nut fixing the A/C hard pipe assembly to the TXV and disconnect the pipe.

Caution: Always fit plugs to open connections to prevent contamination.

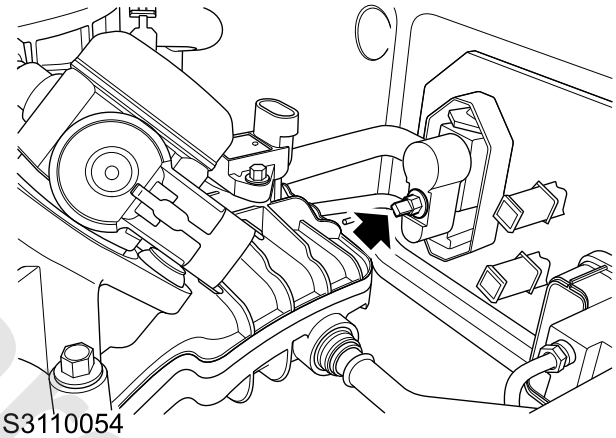

S3110054

5. Remove 2 clamps (1) and (2) fixing the hose to the heater assembly, and disconnect the pipe.

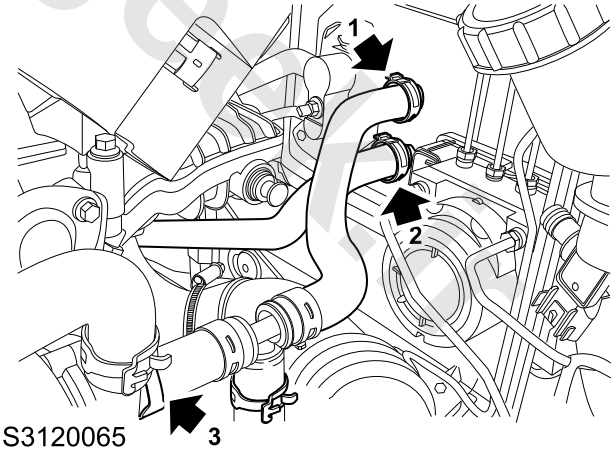

S3120065

6. Remove the instrument panel assembly.

☞ **Instrument Panel Assembly Remove**

7. Remove the beam of the instrument panel.

☞ **Instrument Panel Beam Remove**

8. Disconnect the harness connector of the A/C box assembly.
9. Remove the 2 nuts and 2 bolts securing the A/C box assembly to the instrument panel beam.

www.cargeek.ir

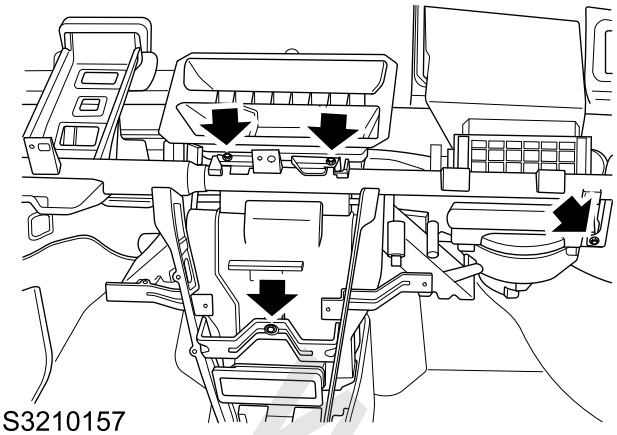

S3210157

10. Remove 2 screws securing the A/C box assembly on the firewall panel.

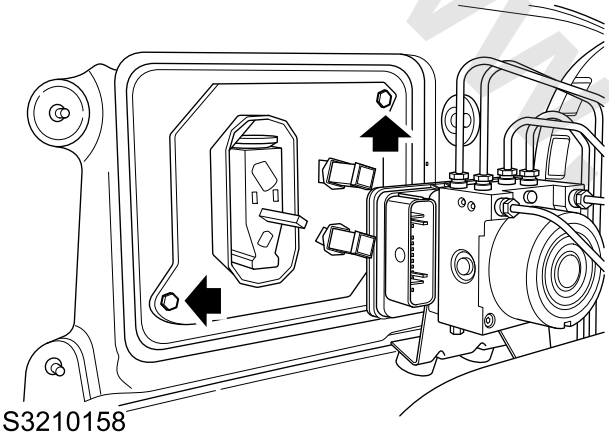

S3210158

11. Remove the A/C box assembly from the vehicle.

Refit

1. Fit the A/C box assembly to the vehicle.
2. Secure the A/C box assembly on the beam of the instrument panel, fit 2 nuts, tighten to **4Nm**, fit 2 bolts, tighten to **4Nm** and check the torque.
3. Fit the A/C box assembly to the front firewall panel, fit 2 bolts, tighten to **5Nm** and check the torque.
4. Connect the connector of the A/C box assembly.
5. Fit the instrument panel assembly.

Instrument Panel Assembly Refit

6. Fix the hose to the heater assembly and secure with clamps.
7. Remove the plug, fit a new seal ring to the A/C pipeline, and coat with clean compressor oil.
8. Fit the A/C hard pipe assembly to the TXV, fit 1 nut, tighten to **18–22Nm** and check the torque.
9. Refill the A/C refrigerant.

A/C Refrigerant Refill

10. Refill the engine cooling system.

Engine Cooling System Refill

11. Connect the battery negative.
12. Perform a self-learning for the A/C servo motor.

Self-learning and Adjustment, Programming and Coding - A/C Servo Motor Self-learning

www.cargeek.ir

Blower

Remove

1. Disconnect the battery negative.
2. Disconnect the blower connector (1).
3. Remove 1 screw (2) securing the blower on the heater assembly.

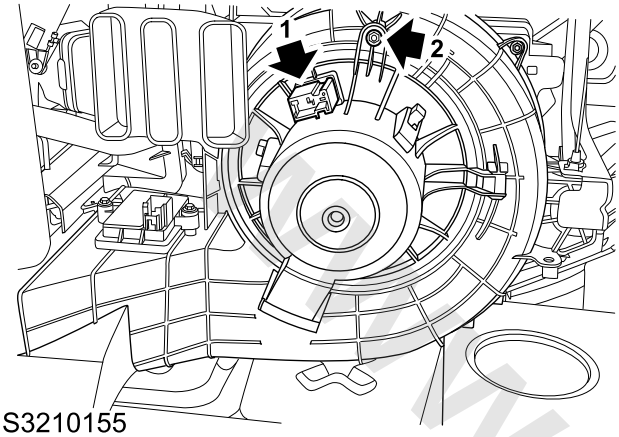

S3210155

4. Pry the clip (1) open and turn it clockwise to remove the blower from the vehicle.

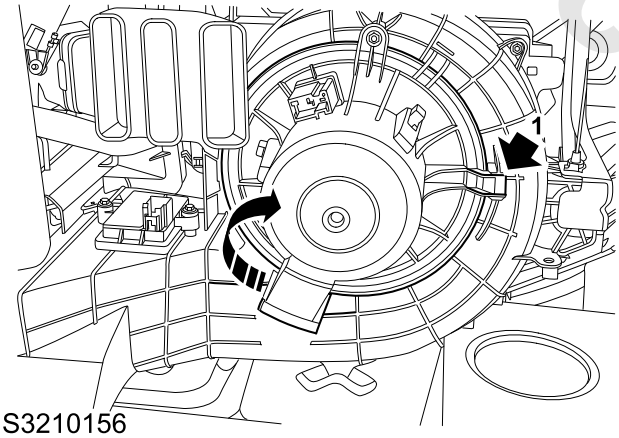

S3210156

Refit

1. Turn the blower counterclockwise to secure it on the heater, and fix the clips.
2. Secure the blower on the heater assembly, fit 1 screw, tighten to **1.2Nm** and check the torque.
3. Connect the connector of the blower.
4. Connect the battery negative.

Heater Core

Remove

1. Remove the A/C box assembly.

☞ **A/C Box Assembly Remove**

2. Remove 1 screw securing the heater core pipe on the A/C box, and release the pipe clip.

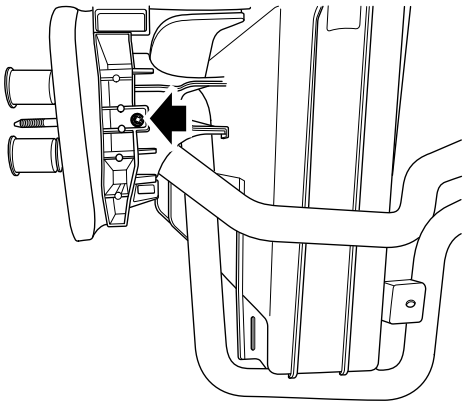

S3210152

3. Release the clip securing the heater core on the A/C box assembly.

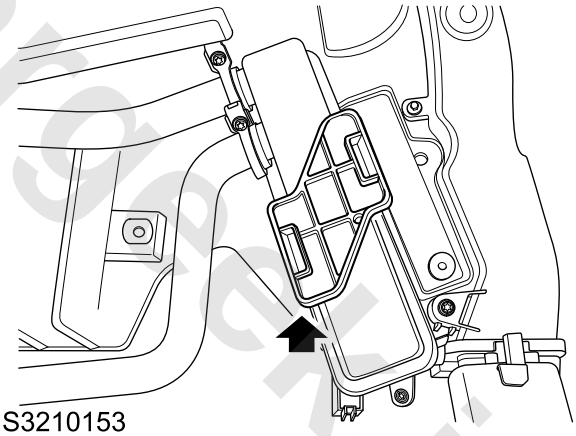

S3210153

4. Remove 2 screws fixing the footwell vent pipe to the A/C box.

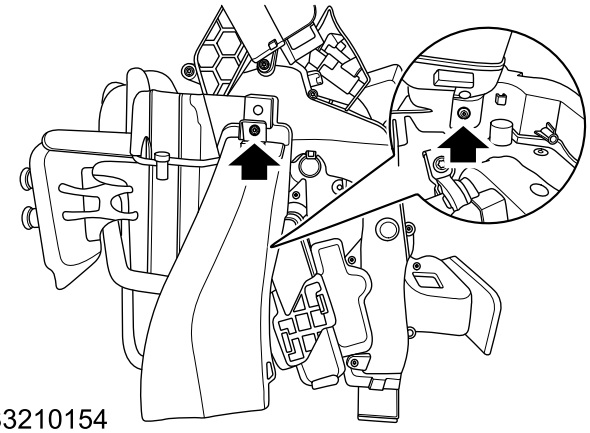

S3210154

5. Remove the heater core from the A/C box assembly.

www.cargeek.ir

Refit

1. Fit the heater core to the A/C box.
2. Fix the footwell vent pipe to the A/C box, and secure the 2 screws.
3. Secure the heater core on the A/C box assembly with clips.
4. Fix the heater core pipe clip to the A/C box, fit 1 screw, tighten to **1.2Nm** and check the torque.
5. Fit the A/C box assembly.

A/C Box Assembly Refit

Blower Speed Regulation Resistance

Remove

1. Disconnect the battery negative.
2. Disconnect the connector of the blower speed regulation resistance.
3. Remove 2 screws fixing the blower speed regulation resistance to the A/C box assembly.

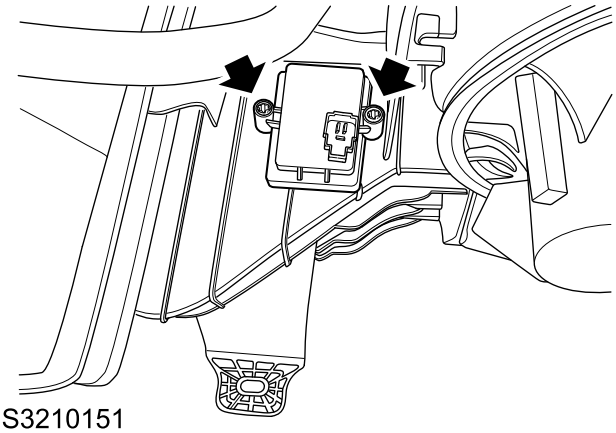

S3210151

4. Remove the blower speed regulation resistance from the A/C box.

Refit

1. Secure the blower speed regulation resistance on the A/C box, fit 2 screws and tighten the screw.
2. Connect the connector of the blower speed regulation resistance.
3. Connect the battery negative.

www.cargeek.ir

www.cargeek.ir

Left Floor Vent Pipe

Remove

1. Remove the driver seat assembly.

☞ **Driver Seat Assembly Remove**

2. Lift the driver carpet.
3. Remove 2 nuts (1) fixing the left floor vent pipe to the floor.

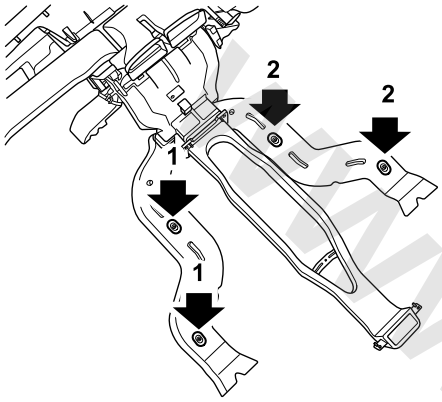

S3210150

4. Remove the left floor vent pipe.

Refit

1. Fit the left floor vent pipe to the vehicle.
2. Fix the left floor vent pipe to the floor, fit 2 nuts and tighten the nut.
3. Arrange the driver carpet.
4. Fit the driver seat.

☞ **Driver Seat Assembly Refit**

Right Floor Vent Pipe

Remove

1. Remove the passenger seat assembly.

☞ **Front Seat Assembly Remove**

2. Lift the passenger carpet.
3. Remove 2 nuts (2) fixing the right floor vent pipe to the floor.

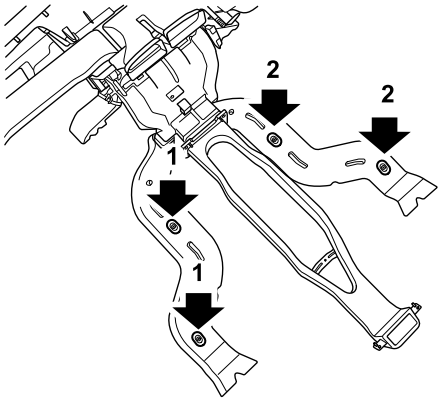

S3210150

4. Remove the right floor vent pipe.

Refit

1. Fit the right floor vent pipe to the vehicle.
2. Fix the right floor vent pipe to the roof panel, fit 2 screws and tighten the screw.
3. Arrange the passenger carpet.
4. Fit the passenger seat assembly.

☞ **Front Seat Assembly Refit**

www.cargeek.ir

www.cargeek.ir

Left Body Relief Valve

Remove

1. Remove the rear bumper assembly.

Rear Bumper Assembly Remove

Bumper Assembly Remove - with PDC

2. Release the clip and remove the pressure relief valve of the left body.

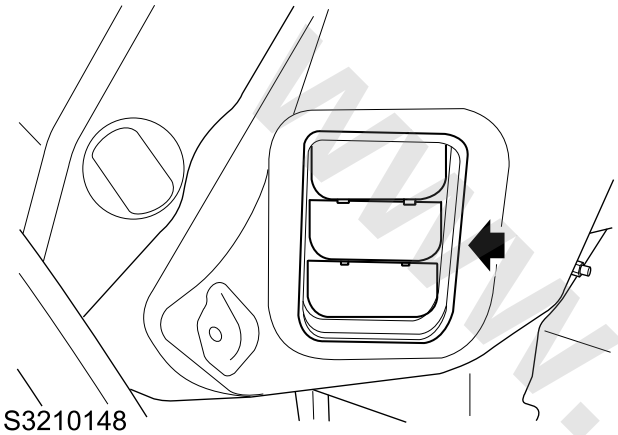

Refit

1. Fix the relief valve of the left body to the body and secure with clips.
2. Fit the bumper assembly.

Rear Bumper Assembly Refit

Bumper Assembly Refit - with PDC

Right Body Relief Valve

Remove

1. Remove the rear bumper assembly.

Rear Bumper Assembly Remove

Bumper Assembly Remove - with PDC

2. Release the clip and remove the pressure relief valve of the right body.

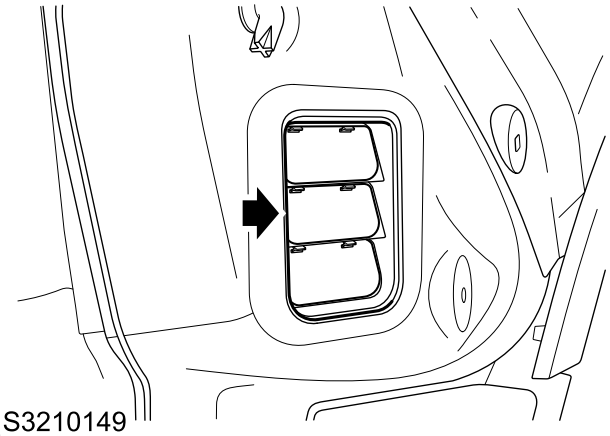

Refit

1. Fix the relief valve of the right body to the vehicle and secure with clips.
2. Fit the bumper assembly.

Rear Bumper Assembly Refit

Bumper Assembly Refit - with PDC

www.cargeek.ir

Instrument Face Air Outlet Pipe

Remove

1. Remove the instrument panel assembly.

☞ **Instrument Panel Assembly Remove**

2. Remove 9 screws fixing the instrument face air outlet pipe to the A/C box assembly.

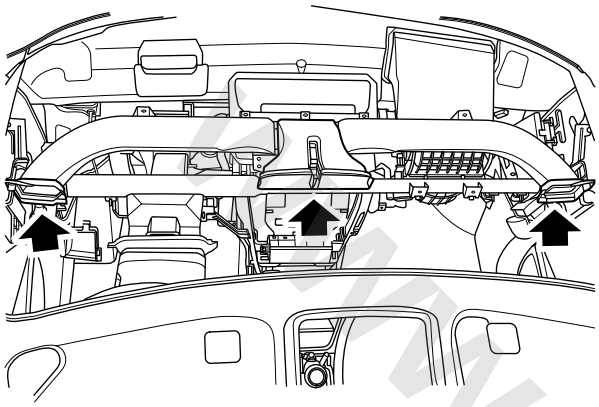

S3210160

3. Remove the face air outlet pipe on the instrument.

Refit

1. Fit the instrument face air outlet pipe to the vehicle.
2. Fix the instrument face air outlet pipe to the A/C box assembly, fit 9 screws and tighten the screw.
3. Fit the instrument panel assembly.

☞ **Instrument Panel Assembly Refit**

Left Instrument Defroster Air Outlet Pipe

Remove

1. Remove the instrument panel assembly.

☞ **Instrument Panel Assembly Remove**

2. Remove the face air outlet pipe on the instrument.

☞ **Instrument Face Air Outlet Pipe Remove**

3. Remove 2 screws fixing the left instrument defrost air outlet pipe to the A/C box assembly.

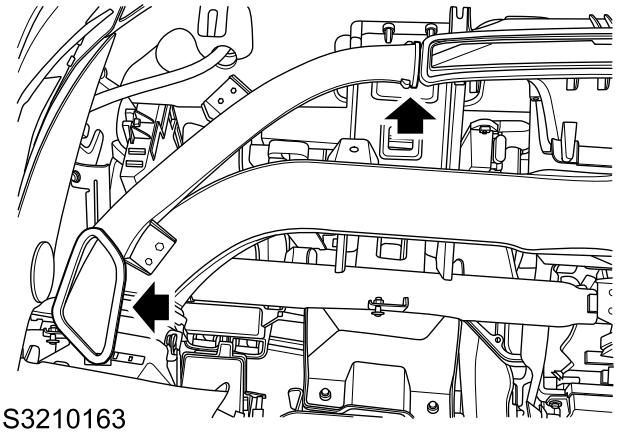

S3210163

4. Remove the left instrument defrost air outlet pipe.

Refit

1. Fit the left instrument defroster air outlet pipe.
2. Fix the left instrument defroster air outlet pipe to the A/C box assembly, fit 2 screws and tighten the screw.
3. Fit the face air outlet pipe on the instrument.

☞ **Instrument Face Air Outlet Pipe Refit**

4. Fit the instrument panel assembly.

☞ **Instrument Panel Assembly Refit**

www.cargeek.ir

Right Instrument Defroster Air Outlet Pipe

Remove

1. Remove the instrument panel assembly.

☞ **Instrument Panel Assembly Remove**

2. Remove the face air outlet pipe on the instrument.

☞ **Instrument Face Air Outlet Pipe Remove**

3. Remove 2 screws fixing the right instrument defrost air outlet pipe to the A/C box assembly.

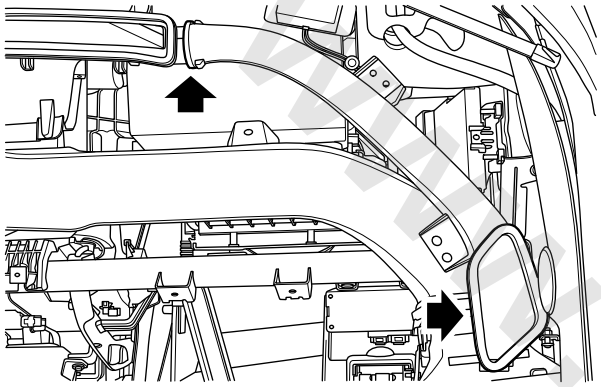

S3210162

4. Remove the right instrument defrost air outlet pipe.

Refit

1. Fit the right instrument defroster air outlet pipe.
2. Fix the right instrument defroster air outlet pipe to the A/C box assembly, fit 2 screws and tighten the screw.
3. Fit the face air outlet pipe on the instrument.

☞ **Instrument Face Air Outlet Pipe Refit**

4. Fit the instrument panel assembly.

☞ **Instrument Panel Assembly Refit**

Central Instrument Defroster Air Outlet Pipe

Remove

1. Remove the instrument panel assembly.

☞ **Instrument Panel Assembly Remove**

2. Remove the face air outlet pipe on the instrument.

☞ **Instrument Face Air Outlet Pipe Remove**

3. Remove 7 screws fixing the central instrument defrost air outlet pipe to the A/C box assembly.

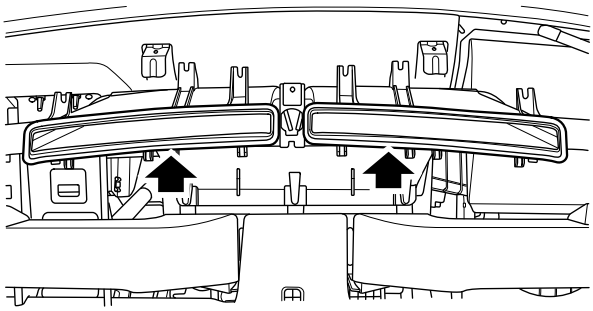

S3210161

4. Remove the central instrument defrost air outlet pipe.

Refit

1. Fit the central instrument defroster air outlet pipe.
2. Fix the central instrument defroster air outlet pipe to the A/C box assembly, fit 7 screws and tighten the screw.
3. Fit the face air outlet pipe on the instrument.

☞ **Instrument Face Air Outlet Pipe Refit**

4. Fit the instrument panel assembly.

☞ **Instrument Panel Assembly Refit**

www.cargeek.ir

www.cargeek.ir

Special Tools

www.cargeek.ir

www.cargeek.ir

HVAC System-MTC

Description and Operation

System Layout

A/C panel

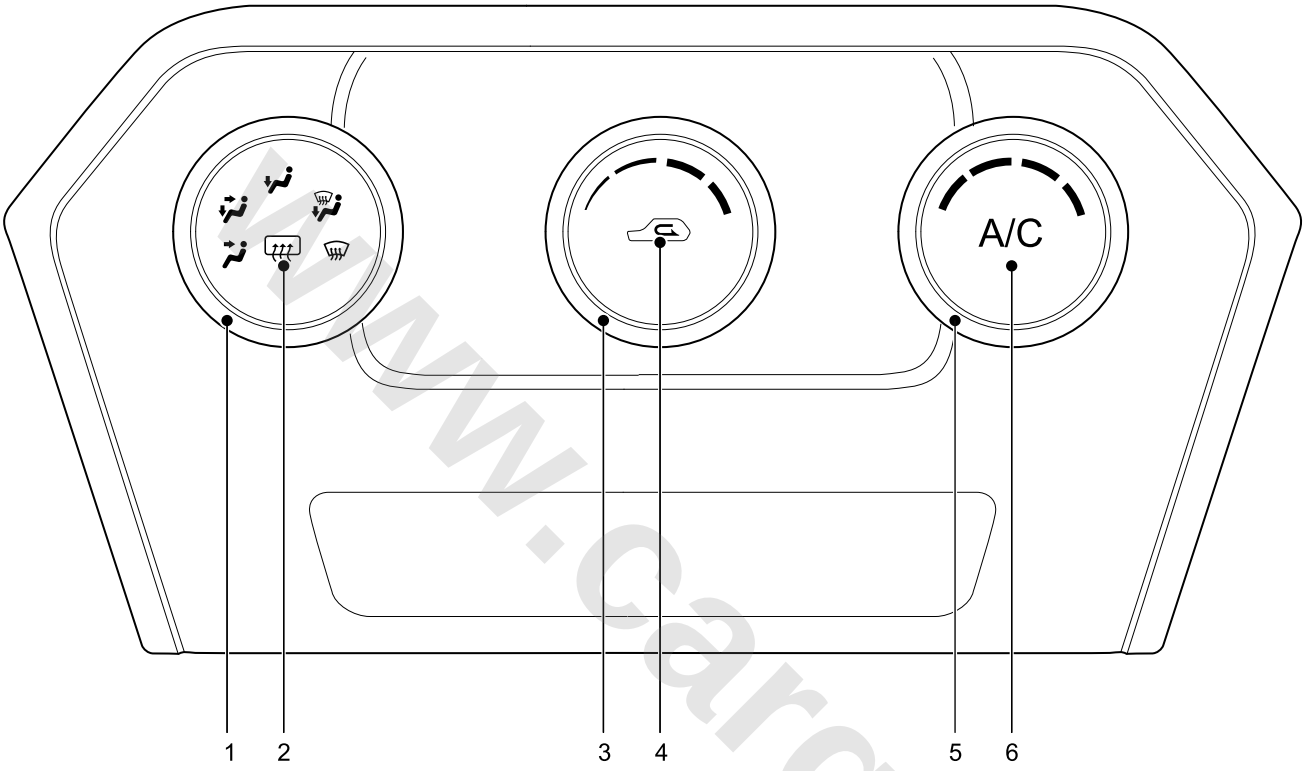

S3210205

1. Air Distribution Mode Knob
2. Heated Rear Window
3. Air Volume Adjustment Knob
4. Air Circulation Mode
5. Temperature Adjustment Knob
6. A/C Button

www.cargeek.ir

www.cargeek.ir

A/C Control System

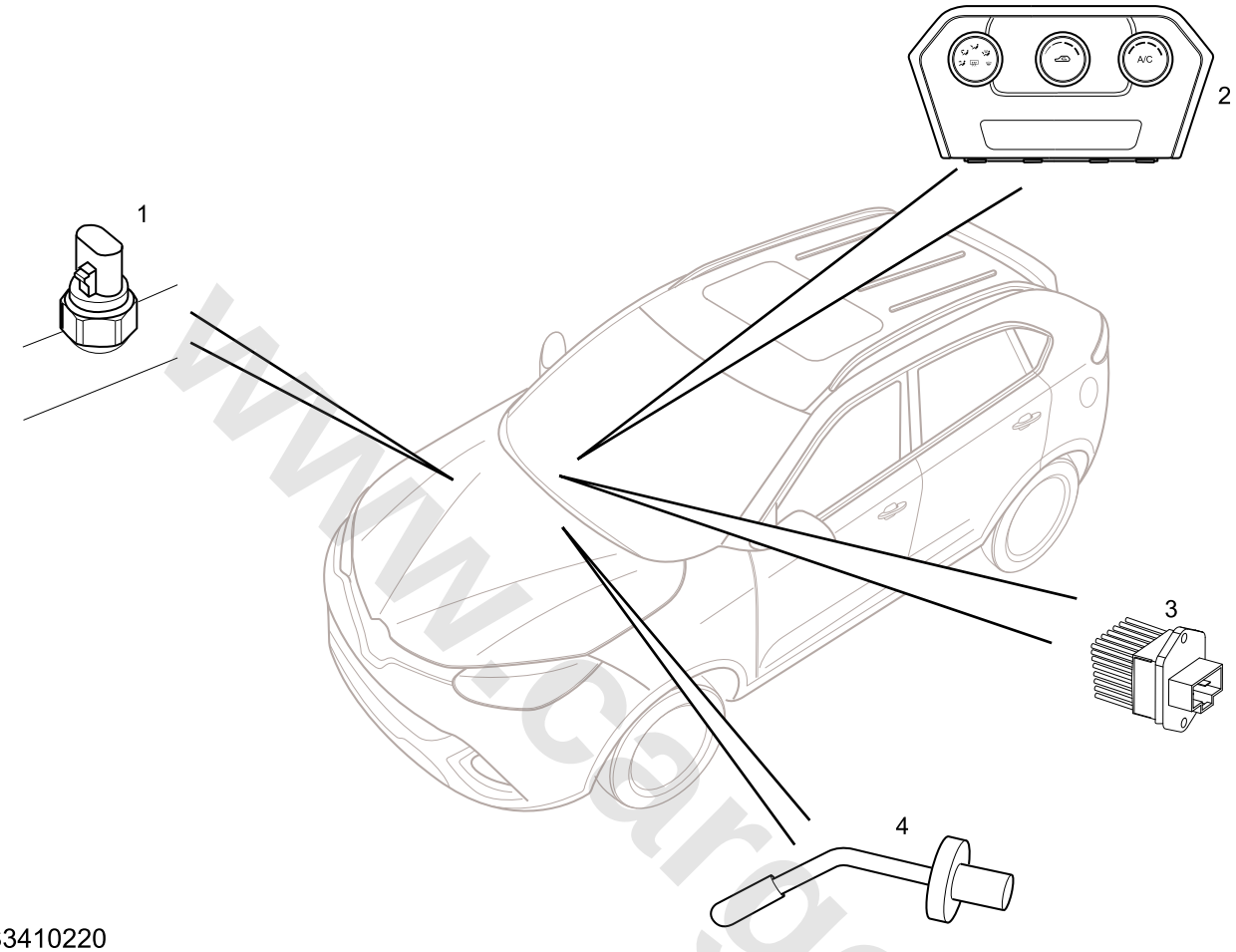

S3410220

1. A/C Pressure Switch
2. A/C Control Panel
3. Blower Speed Regulation Resistor
4. Evaporator Temperature Sensor

www.cargeek.ir

www.cargeek.ir

System Control Diagram

MTC System Control Diagram

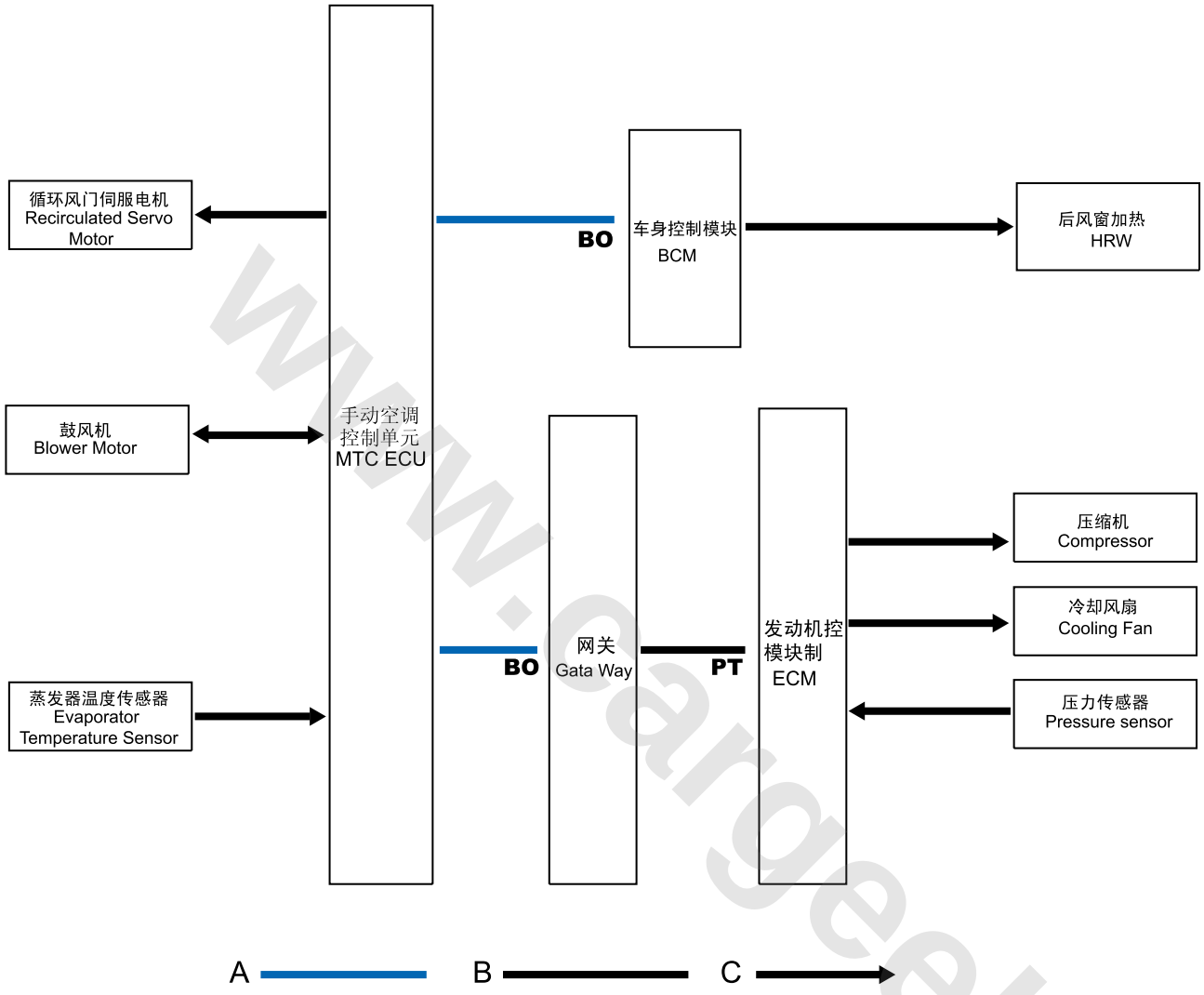

S3210188

A = body HS CAN Bus; B = Power HS CAN Bus; C = Hard Wire

www.cargeek.ir

www.cargeek.ir

Description

Overview

In manual air conditioning system, functions such as air temperature, air distribution and blower speed are selected manually.

Manual Air Conditioning System

The control system consists of the following components:

- Manual Controller
- Evaporator Temperature Sensor
- Blower Speed Regulation Resistor

Manual Controller

Manual controller and **BCM** are connected by hard wire so as to control the rear window heater and mode control, etc.

Heating and ventilation system control the temperature and distribution of the air inside the vehicle. This system consists of the following parts: filter hood, heater assembly, distribution duct and controller assembly.

The fresh air or recycled air from the filter cover flows into the heater assembly is heated or cooled according to the settings of the control panel, then the heated air or cooled air is supplied to the front windshield via the distribution pipe.

Control Panel

The switch on the control panel has the following functions:

Air Distribution Switch:

When the switch is pressed every time, the air distribution will change, and the change range is only face, face and foot, only foot, foot and front windshield/front side window defrosting, windshield/front side window defrosting, only front windshield/front side window defrosting.

Temperature Control:

Rotate the temperature adjustment knob clockwise/counterclockwise to decrease/increase the temperature.

Heated rear window (HRW) switch:

HRWHRW works only when the engine is running. Operate **HRW** switch to send a message over hard wire to **BCM**. This will make**HRW** energized and operated to supply power to**HRW**. **HRW**Its function is timed (unless it is turned off manually), otherwise the rear window heater will stop automatically at the following time:

- 12 minutes (the ambient temperature is higher than or equal to 10°C), it will stop immediately if the switch is pressed in this period.

A/C Switch:

Press the A/C switch to switch on the air conditioner. Press the switch again to switch off the A/C.

Blower Switch:

Rotate the air volume adjustment knob clockwise/counterclockwise to increase/decrease the air volume. The air volume has a total of 5 gears, which is 0 gear to 4 gear arranged from small to large.

Air Circulation Button:

When the ignition is switched on, you may change the internal/external circulation status with the air circulation control button.

Press the air circulation control button, the indicator in the button will illuminate, the circulation damper will be closed and the internal air is separated from the ambient environment, the system enters into the internal circulation state. Press this button again, the indicator in the button will go off, the circulation damper will be opened and the system switch to the external circulation mode.

A/C Pressure Sensor

The A/C pressure sensor protects the refrigerant system from extreme pressure and helps control the speed of the engine cooling fan. The pressure sensor is refitted on the high temperature/high pressure A/C pipe between the condenser and **TXV** at the rear corner of the engine compartment. This sensor outputs a pressure signal to **ECM**.

Evaporator Temperature Sensor

The evaporator temperature sensor is a **NTC** sensor, providing the input of the evaporator exhaust outlet temperature to MTC**ECU**. Evaporator temperature sensor is located at the outlet of evaporator core in heater assembly.

www.cargeek.ir

www.cargeek.ir

Operation

MTC System Control

To run the A/C system, MTC **ECU** communicates with **ECM**, **ECM** controls the engagement of the compressor clutch and the speed of the engine cooling fan. MTC **ECU** also controls the operation of servo motor on the A/C box assembly, blower speed, air temperature.

Compressor Control

When it detects that the request has changed to compressor on, **ECM** will energize the compressor clutch relay to supply battery power to the compressor clutch, provided the following conditions exist:

- Pressure sensor to **ECM** ground
- The evaporator temperature is above 5°C.
- The engine is not under hard acceleration.
- The engine coolant temperature is not too high.
- There is no engine running problem.

If one of the grant conditions no longer exists, **ECM** will de-energise the compressor clutch relay, to disengage the compressor clutch, until the grant condition is restored.

Compressor Clutch Relay

When the main relay is energized, the relay coil of A/C compressor clutch may be activated. The relay coil ground is controlled by **ECM**, which completes the ground when an A/C On request message is received.

Failure

If the A/C compressor clutch relay fails, the following symptoms will be observed:

- The clutch will not engage on the compressor drive pulley (visual check)
- The intake air temperature will not drop

The following failures of the A/C compressor clutch relay may occur:

- Relay coil is open-circuited
- The relay coil is open
- Relay coil has a high resistance
- The relay contact keeps open
- The relay contact keeps closed
- Relay contact has a high resistance
- The relay wire is open
- The relay wire has high resistance
- The relay wire is short to 12V power supply
- The relay wire is short to the ground
- **ECM**Not supply the ground

Air Temperature Control

The A/C box assembly blend damper is controlled by the temperature button on the control panel. The blend damper changes the ratio of air flowing through the A/C box bypass and the heater core body.

Blower Control

The blower relay and power tube are used to run the blower in the speed under one of 4 gears. The blower relay is powered by the battery and grounded via MTC **ECU**, MTC **ECU** adjusts the voltage of the blower motor via the power tube to control the blower speed.

Air Distribution Control

The A/C box assembly mode damper is controlled by the air distribution button on the control panel. The air distribution flaps in the A/C box assembly to direct air into the corresponding air outlets around the passenger compartment.

Diagnosis

Every time when the ignition switch is on, the MTC **ECU** will perform a check for diagnosis and save the relevant **DTC** to MTC **ECU**. Then, MTC **ECU** returns to normal control state, but uses the default value or default policy to correspond to the detected failure. **DTC**It may be read through the scan tool.

www.cargeek.ir

Service Procedures

A/C Controller Assembly - MTC

Remove

1. Disconnect the battery negative cable.
2. Remove the center console molding.

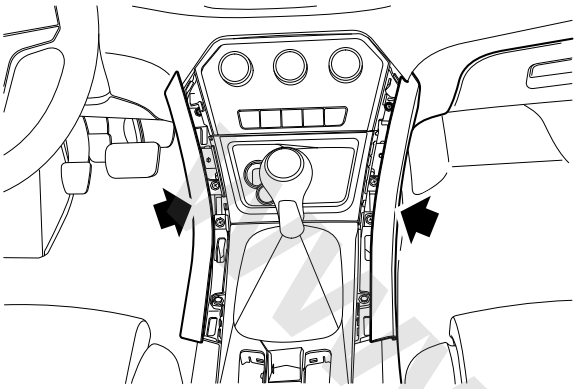

S3210200

3. Remove 2 screws fixing the A/C panel to the center console.

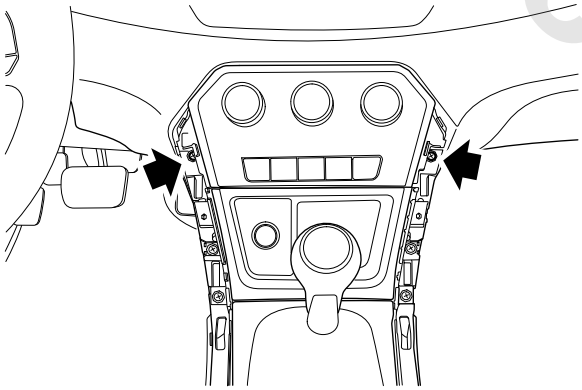

S3210199

4. Loosen the lock catches, disconnect the connection (1), (2) between the mode damper and temperature damper cable and A/C panel.
5. Disconnect the connector (3) of the A/C panel.

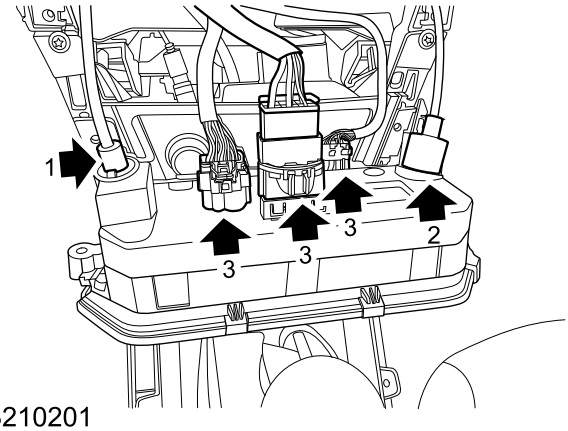

S3210201

6. Release the clip fixing the A/C control assembly to the panel, and remove the A/C control assembly.

Refit

1. Fix the A/C controller assembly to the A/C panel, and tighten with clips.
2. Connect the connector to the A/C controller assembly.
3. Fit mode damper and temperature damper cable.
4. Fix the A/C panel to the vehicle, and fit 2 screws and tighten it.
5. Fit the center console.
6. Connect the battery negative cable.

www.cargeek.ir

www.cargeek.ir

A/C panel - MTC

Remove

1. Disconnect the battery negative cable.
2. Remove the A/C controller assembly.

Air conditioning controller assembly remove

3. Remove 2 screws fixing the center control switch to the panel.
4. Remove A/C panel.

Refit

1. Fix the center control switch to the panel, fit 2 screws and tighten them.
2. Fit the air conditioning controller assembly.

Air Conditioning Controller Assembly Refit

3. Connect the battery negative cable.

Mode Damper Cable

Remove

1. Remove A/C panel.

A/C Panel Remove.

2. Remove the passenger side heater closing plate.

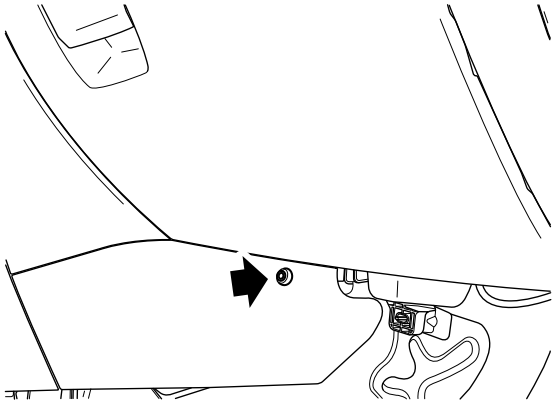

S3210204

3. Remove the lock catches fixing the mode damper cable to the air plate linkage, and remove the damper cable from the vehicle.

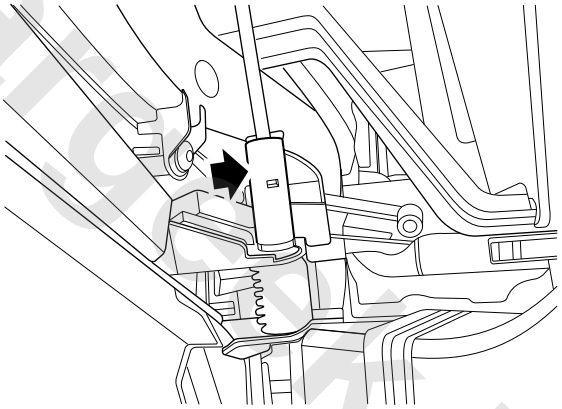

S3210203

Refit

1. Fix the mode damper cable to the air plate linkage, and tighten with clips.
2. Fix the right heater closing plate to the body, fit the screw and tighten it.
3. Fit A/C panel.

A/C panel Refit

www.cargeek.ir

Temperature Damper Cable

Remove

1. Remove A/C panel.

☞ **A/C Panel Remove.**

2. Remove the clips fixing the temperature damper cable to the air plate linkage, disconnect the connection.

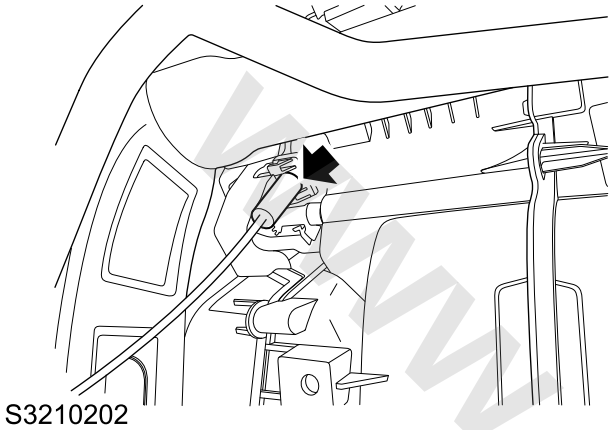

3. Remove the temperature damper cable from the vehicle.

Refit

1. Fix the cable to the mode damper rod, and tighten with lock catches.
2. Fit A/C panel.

☞ **A/C panel Refit**

www.cargeek.ir

www.cargeek.ir

Special Tools

www.cargeek.ir

www.cargeek.ir

www.cargeek.ir

HVAC System-ATC

Specifications

Torque

Description	Value
Bolt-Controller to cross member dash	2–4Nm
Screw-A/C control panel to IPK	1.2–2Nm
Bolt-Blend flap servo motor to heater case	1.2Nm
Bolt-Fresh recirculated air flap servo motor to heater case	1.2Nm
Bolt-Distribution flap servo motor to heater case	1.2Nm

www.cargeek.ir

www.cargeek.ir

www.cargeek.ir

Description and Operation

System Layout

A/C Control Panel

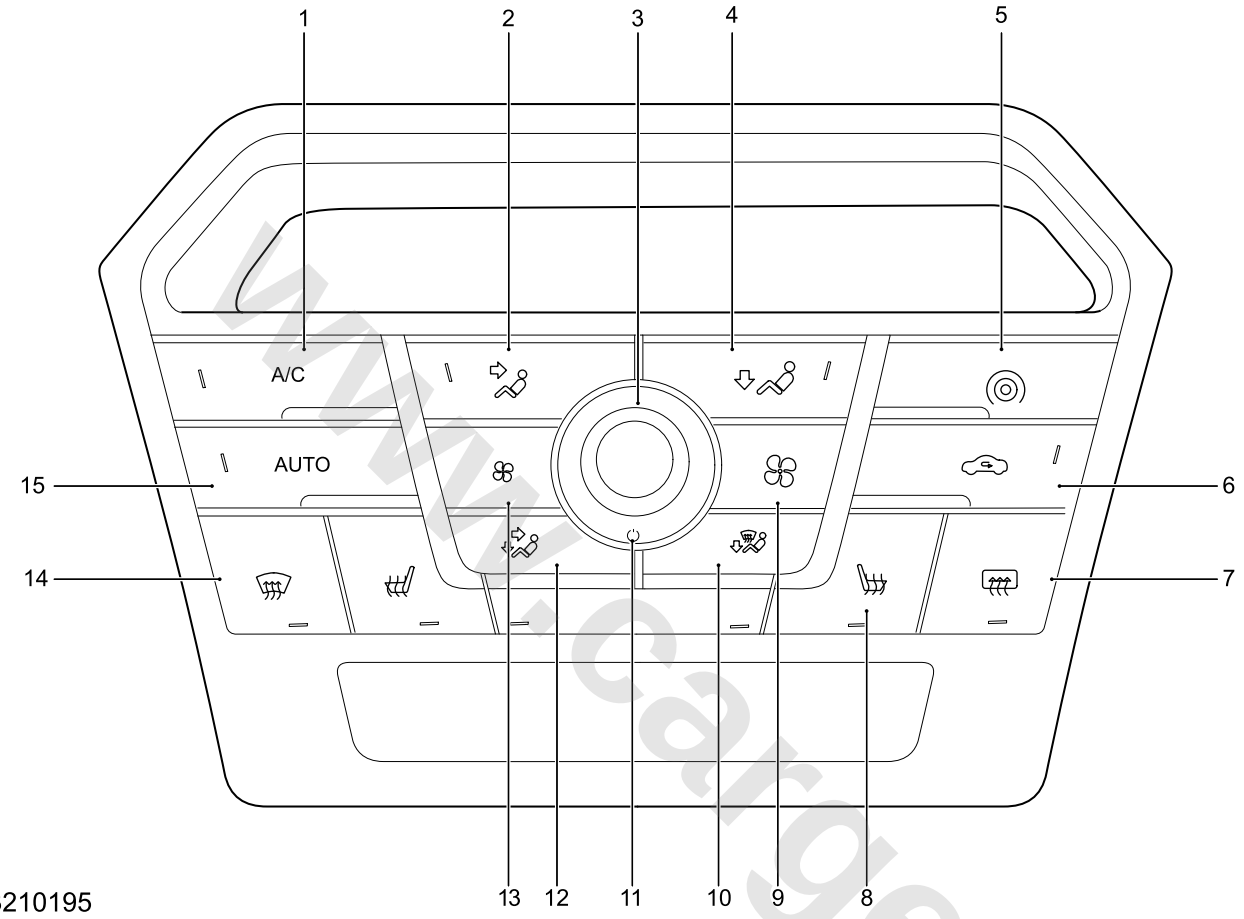

1. A/C Button
2. Face Button
3. Temperature Control Knob
4. Footwell Button
5. Interior Temperature Sensor (not button)
6. Air Circulation Button
7. Rear Window Heater Button
8. Front Seat Heater Button
9. Air Volume + Button
10. Footwell & Defrost/Defog Button
11. System Button
12. Footwell/Face Button
13. Air Volume - Button
14. Defrost/Defog Button
15. Auto Button

www.cargeek.ir

A/C Control System

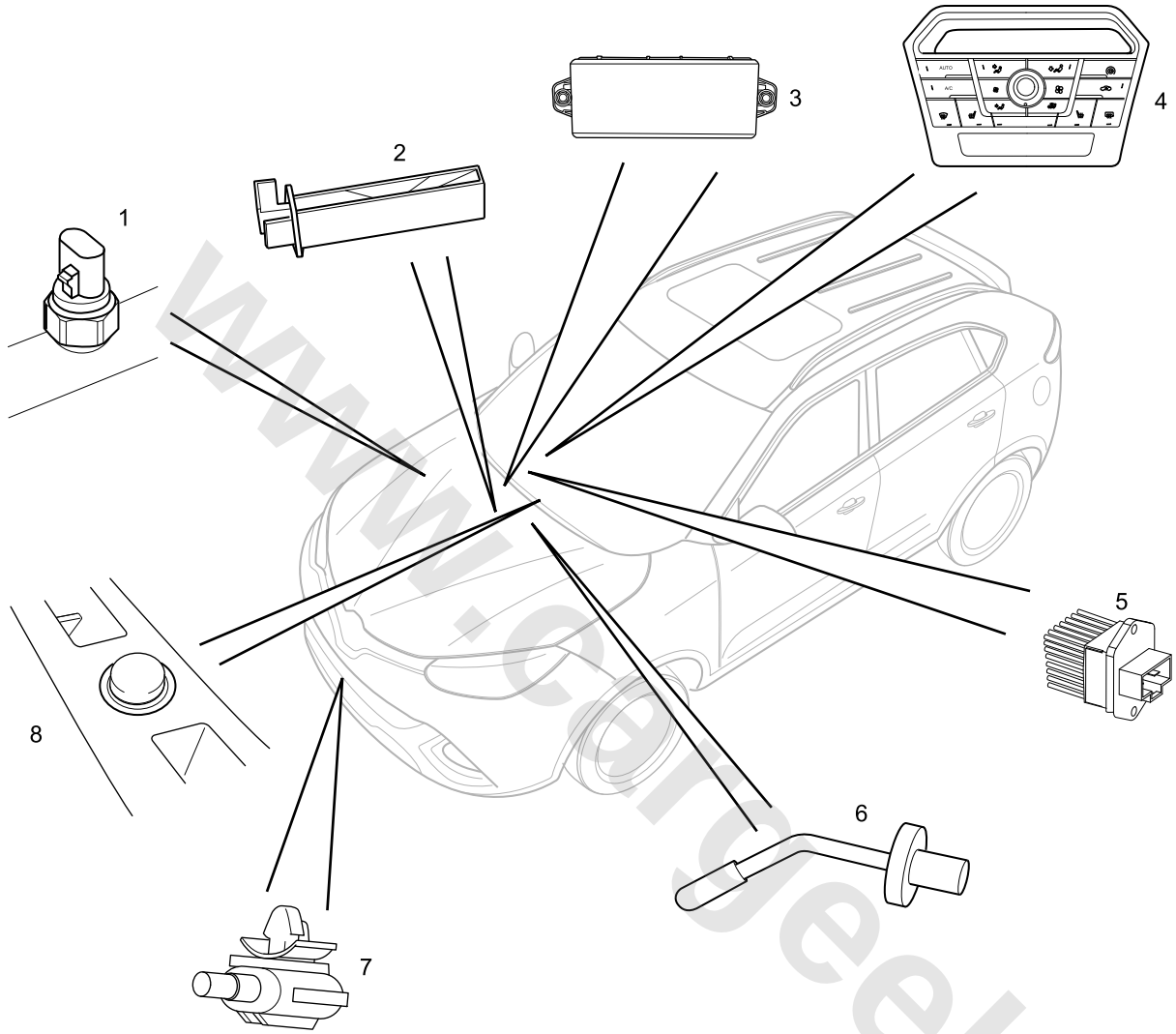

1. A/C Pressure Sensor
2. Air Outlet Temperature Sensor
3. A/C Controller
4. ATC Control Panel
5. Blower Speed Regulator Module
6. Evaporator Temperature Sensor
7. Ambient Temperature Sensor
8. Solar Sensor

www.cargeek.ir

System Control Diagram

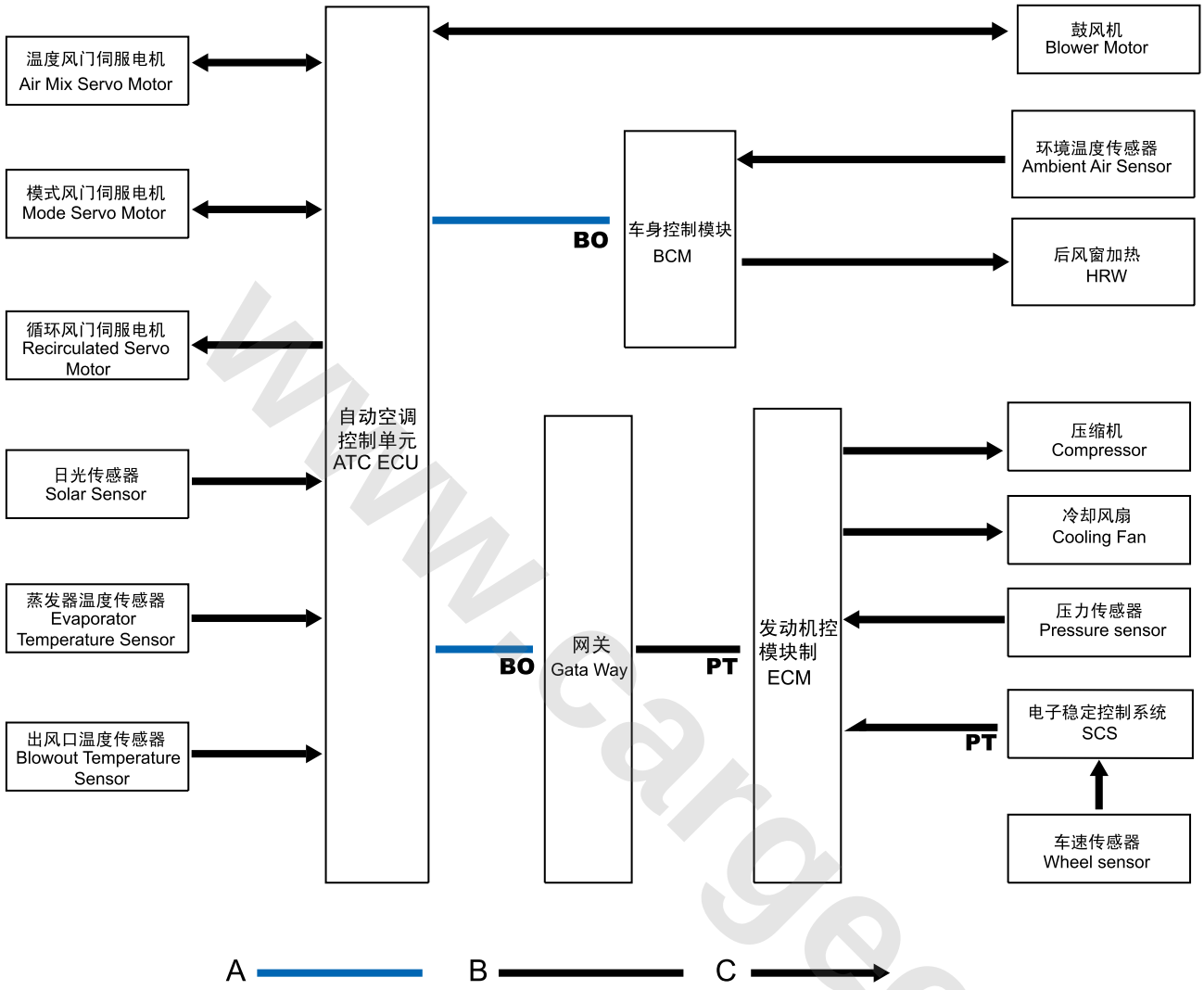

S3210188

A = Body HS CAN Bus; B = Power HS CAN Bus; C = Hard Wire

www.cargeek.ir

Description

Overview

The ATC automatically monitors the inside and outside temperature, and adjusts the outlet air temperature, blower speed and air distribution. The auto mode provides an optimum system control mode and does not need any manual interference. Manual mode allows to ignore the automatic running of a single function for the purpose of fulfilling individual needs.

Control System - Automatic Temperature Control (ATC)

The automatic temperature control (ATC) controls the air temperature and air distribution inside the vehicle by its control over the refrigeration system and the control dampers within the heater assembly. It sends a signal to the blower control module to control the blower and further control air quantity. It also outputs a signal to the **BCM** to control the rear window heater.

ATC consists of the following components:

-
- **ATC ECU**
- **ATC** Control Panel (with Interior Temperature Sensor)
- A/C Pressure Sensor
- Evaporator Temperature Sensor
- Solar Sensor
- Blower Control Module
- Ambient Temperature Sensor
- Face Temperature Sensor
- Footwell Temperature Sensor

ATC ECU

ATC ECU is in the center of the instrument panel below the radio.

The input signals of the sensor and control panel switch are processed by the **ATC ECU**, and then the **ATC ECU** outputs the corresponding control signal.

ATC The **ECU** communicates with the **BCM** through the **HS CAN**, which controls the rear window heater and diagnosis system; the **ATC ECU** communicates with the **ECM** through the GW controller, which controls the compressor clutch and cooling fan to work at high/low speed. The **ATC ECU** directly receives evaporator temperature, powers on/off the compressor clutch and protects the surface of the evaporator from frosting.

Control Panel - Automatic Temperature Control (ATC)

The temperature knob is an incremental switch, and other switches on the control panel are not the self-locking switches. Such switches have the following functions:

Air distribution switch:

Activated only when the system is running. Manual control of air distribution is available:

- When a switch is pressed every time, the air distribution will change, and the change sequence is only face, face and footwell, only footwell, footwell and windshield/front side window defrost, only windshield/front side window defrost.

Temperature Control:

Activated only when the system is running.

- Every turn of the temperature switch will increase or decrease the corresponding set temperature by 1°C, and temperature ranges between 18°C and 26°C.
- If the temperature knob is turned counterclockwise when the temperature is set to 18°C, the screen displays LO (maximum cooling).
- If the temperature switch is turned clockwise when the temperature is set to 26°C, the screen displays HI (maximum heating).

HRW switch:

The **HRW** works only when the engine is running. When operating the **HRW** switch, a message will be sent to the **BCM** via the **HS** bus. This will energize the **HRW** and provide power supply to the **HRW**. The **HRW** function can be timed, the rear window heater will close automatically after the following periods (unless it is closed manually):

- 12min (the ambient temperature is ≥ 10°C), if the switch is pressed during this period, then the heater immediately closes.

A/C On/Off Button:

Press the A/C switch to switch on the air conditioner. The screen displays **A/C** icon. Press the switch again to turn off the A/C.

Blower Switch:

Activated only when the system is running. Manual control of blower speed is available:

- When the speed switch -/+ is pressed, the blower speed will range from speed 1 to 7.
- If the switch is pressed and held, after 1s, the speed will change every 0.5s till the switch achieves the full scale or 1.

www.cargeek.ir

Fresh/Recirculated Air Switch:

Activated only when the system is running. Manual selection of air inlet source is available. When selecting the recirculated air mode by manual control, the **LED** indicator in the switch will illuminate.

Defrost Switch:

Even if the engine does not run after the ignition switch is enabled, the defrost mode can still work. When the defrost switch is enabled, the following functions will be enabled:

- Air distribution is set to windshield.
- The blower is set to the maximum speed, but manual control is still available without turning off the defrost mode.
- Select the air inlet source as fresh air.
- Select A/C (when the engine is running).

Select **AUTO** to turn off the Defrost mode (if enabled) and turn on AUTO mode. In "Defrost" mode, select Defrost again to turn off this function and turn on the AUTO mode. If the **ATC** is off, select "Defrost" will turn on the system.

AUTO Button

Turn on the auto mode or switch to auto mode/other modes from auto mode. Use the AUTO button to switch ON/OFF the AUTO icon. In auto mode, the **ATC ECU** will automatically control the interior air temperature and air distribution.

When the auto mode is selected and the ambient temperature is lower than 5°C, the rear window heater will start automatically.

When the ignition key is removed and the **HRW** function is reset, it shall be re-selected in the next ignition cycle.

System ON/OFF:

Press the system ON/OFF button to turn off the system except the screen; and press it again to turn on the system.

Display Output - Automatic Temperature Control (ATC)

When relevant system function is activated, the symbol and text on the screen will be highlighted. When the exterior lighting is turned off/on, the output illumination on the **ATC LCD** screen is adjusted according to the output illumination of the instrument pack.

Temperature:

The external ambient temperature and interior temperature are displayed.

Recirculated Air:

When the air inlet source is manually selected as recirculated air, it illuminates.

Automatic Mode:

In **AUTO** mode, the air distribution mode and air volume are automatically adjusted to maintain the required temperature. Then, the **AUTO** icon and air volume icon are displayed on the screen.

Manual Air Distribution:

The corresponding icon illuminates to display air distribution selected manually.

Blower Speed:

In AUTO mode, the air volume is set automatically.

In Manual mode, press air volume +/- button to increase/decrease air volume. The 7 segments on the screen represents air volume.

A/C Pressure Sensor

The A/C pressure sensor protects the refrigerant system from extreme pressure and helps control the speed of the engine cooling fan. The pressure sensor is on the high temperature/high pressure A/C pipe between the condenser and **TXV** at the rear corner of the engine compartment. This sensor outputs a pressure signal to the **ECM**.

Evaporator Temperature Sensor

The evaporator temperature sensor is an **NTC** sensor, which provides temperature input of the evaporator air outlet for the **ATC ECU**. Evaporator temperature sensor is located at the outlet of the evaporator core in the heater assembly.

Interior Temperature Sensor

The interior temperature sensor is an **NTC** sensor, which provides air temperature input of the passenger compartment for the **ATC ECU**. The sensor is inside the **ATC** panel.

Solar Sensor

This sensor is in the center of the instrument panel near the windshield. The solar sensor consists of two diodes which provide input illumination intensity for the **ATC ECU**, one detects the illumination intensity input of the left vehicle and the other detects the illumination intensity input of the right vehicle. These inputs are used to measure the solar heat effect acting on passengers.

Footwell/face Temperature Sensor

The footwell/face temperature sensor is an **NTC** sensor which provides signal input relating to footwell/face temperature for the **ATC ECU**.

Ambient Temperature Sensor

The ambient temperature sensor is fixed on the front grille. The **ATC ECU** uses the signal of the sensor to modify

www.cargeek.ir

climate control algorithm, so as to compensate the ambient air temperature.

ATC Harness Connector

End View and Pin Information of ATC Harness Connector FA037

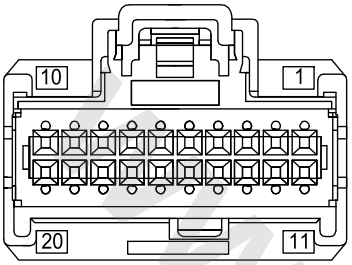

Pin No.	Description
1	KL15
2	KL30
3	KL31
4	Ambient Temperature Sensor
5	5V Power Supply_1
6	Solar Sensor with Heat Indicator
7	Sensor with Heat Indicator
8	Sensor Ground_1
9	LIN_1
10	HS CAN High
11	A/C Request
12	—
13	—
14	Solar Sensor
15	—
16	Ground of Sensor with Heat Indicator
17	Reference Sensor with Heat Indicator
18	—
19	—
20	HS CAN Low

End View and Pin Information of ATC Harness Connector FA038

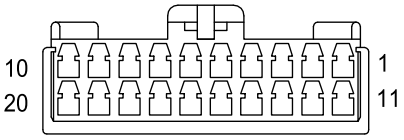

Pin No.	Description
1	Face Air Outlet Temperature Sensor
2	Footwell Air Outlet Temperature Sensor
3	Temperature Damper Actuator +
4	Temperature Damper Actuator -
5	Temperature Damper Actuator Feedback
6	—
7	Mode Damper Actuator +
8	Mode Damper Actuator -
9	Mode Damper Actuator Feedback
10	—
11	Evaporator Temperature Sensor
12	—
13	5V Power Supply_2
14	Fresh/Recirculated Damper Actuator +
15	Fresh/Recirculated Damper Actuator -
16	—
17	Sensor Ground_2
18	Blower Control
19	Blower Feedback +
20	Blower Feedback -

www.cargeek.ir

Operation

ATC

The **ATC** system is a closed loop control system, and its purpose is to realize a comfortable climate in the passenger compartment. For this purpose, the system will maintain the following two conditions:

- Distribute temperature between the floor and the roof.
- Maintain an average temperature in the passenger compartment.

Maintain a higher temperature for the floor and a lower temperature for the roof according to the following inputs:

- Set the temperature in the passenger compartment as per user's selection.
- Interior temperature
- Ambient Temperature
- Evaporator Temperature
- Face Outlet Air Temperature
- Footwell Outlet Air Temperature

The **ATC ECU** handles these inputs and outputs the followings:

- Blower Speed
- Position of Blend Damper Servo Motor
- Position of Mode Damper Servo Motor
- Position of Internal/External Circulating Damper Servo Motor

The sensor and control panel switch input information into the **ATC ECU**, and the **ATC ECU** then outputs the information into the heater assembly and communicates with the **BCM**. The **ATC ECU** and **ECM** are connected through a gateway controller.

When the system is powered on for the first time, the **ATC ECU** continues to use the control output used when the system is powered off last time. If the condition changes, or initiate the system in a different mode, change the control output immediately to produce the desired new setting.

When the system operates in the auto and defrost modes, it is possible to manually set the intake air supply, blower speed and air distribution, and ignore the automatic control. The air temperature is automatically controlled in all running modes.

In the auto mode, the **ATC ECU** manipulates the system to warm or cool the passenger compartment, so as to establish and maintain the selected temperature on the control panel, at the same time guides the air flow to the outlets that make the passengers feel most comfortable.

In the defrost mode, the **ATC ECU** sets the intake air supply as fresh air, the blower as the maximum speed and the air distribution as the windshield and front window.

ATC ECU outputs a signal to the **BCM** to manipulate the rear window heater.

While pressing the fresh/recirculated air switch, the fresh/recirculated air damper shall determine whether the air source is the fresh air outside the vehicle or the recirculated air already in the passenger compartment. **ATC ECU** controls the damper on the following two positions:

- Fresh Air
- Recirculated Air

If press the fresh/recirculated air switch when **AUTO** mode is disabled, the recirculated air damper will shift from fresh air to recirculated air, and vice versa.

Compressor Control

When it detects that the request has changed to compressor activation, the **ECM** will power on the compressor clutch relay to supply battery power to the compressor clutch, provided that the following conditions exist:

- Pressure sensor and **ECM** connect the ground.
- The evaporator temperature is above 5°C.
- Acceleration of the engine can be easily realized.
- The engine coolant temperature is not high.
- There is no engine running problem.

If one of the permitted conditions no longer exists, the **ECM** will power off the compressor clutch relay and disengage the compressor clutch until the permitted condition is restored.

Compressor Clutch Relay

When the main relay is energized, the relay coil of the A/C compressor clutch can be activated. The relay coil ground is controlled by the **ECM**, which completes grounding when an A/C On request is received.

Failure

If the A/C compressor clutch relay fails, the followings will occur:

- The clutch does not engage the compressor pulley (visual check).
- High intake air temperature.

The A/C compressor clutch relay may have the following malfunctions:

- Relay coil is short-circuited.
- Relay coil is open.
- Relay coil has a high resistance.
- Relay contact is disconnected.

www.cargeek.ir

- Relay contact is closed.
- Relay contact has a high resistance.
- Relay wire is open.
- Relay wire has a high resistance.
- Relay wire is short to the 12V power supply.
- Relay wire is short to ground.
- **ECM** does not provide ground.

Air Temperature Control

To determine the amount of warm air and cool air required for the passenger compartment, the **ATC ECU** uses the sensor input and the selected temperature on the control panel to calculate the target temperature at air outlet of heater assembly on the driver side and front passenger side. Then, the **ATC ECU** sends a signal to the servo motor and allows them to control the blend damper on the heater assembly so that the blend damper can move to the appropriate location. The target temperature will be updated continuously, and in the automatic mode, the target temperature will be used for further calculation of the blower speed and air distribution.

The average temperature in the passenger compartment is regulated according to the ambient temperature. If the ambient air temperature is too low, raise the average temperature in the vehicle. If the ambient air temperature is high, slowly raise the average temperature in the vehicle.

The signal provided by the solar sensor serves as a compensation for the control algorithm so that a comfortable temperature in the passenger compartment can be reached even if there is sunshine. The compensation is effective only when air distribution is set to face or face/footwell mode because the passengers can well feel the compensation for these positions.

Blower Control

The blower speed can be controlled by manual selection or auto control. The blower speed can be calculated by the following inputs:

- Ambient Temperature
- Temperature Difference of External Control Circuit
- Set Temperature
- Battery Voltage
- Blower Feedback Voltage

The blower relay and power tube allow the blower to work at one of the 8 speeds. The blower relay is powered by the battery and grounded via the **ATC ECU**, the **ATC ECU** controls the blower speed by adjusting the voltage of the blower motor via the power tube.

Air Distribution Control

To control the air distribution in the passenger compartment, the **ATC ECU** sends a signal to the servo motor and allows it to control the distribution damper in the heater assembly so that it can move to the appropriate location.

Diagnosis

Every time when the ignition switch is enabled, the **ATC ECU** will perform a diagnosis and save the relevant **DTC** (if any) to the **ATC ECU**. Then, the **ATC ECU** returns to normal control state, but uses the default value or default strategy to correspond to the detected failure. Read the **DTC** with the scan tool.

www.cargeek.ir

Service Procedures

A/C Controller Assembly - ATC

Remove

1. Disconnect the battery negative.
2. Remove the A/C control panel.

☞ **A/C Control Panel Remove**

3. Remove the 2 bolts securing the A/C controller assembly on the instrument panel beam.

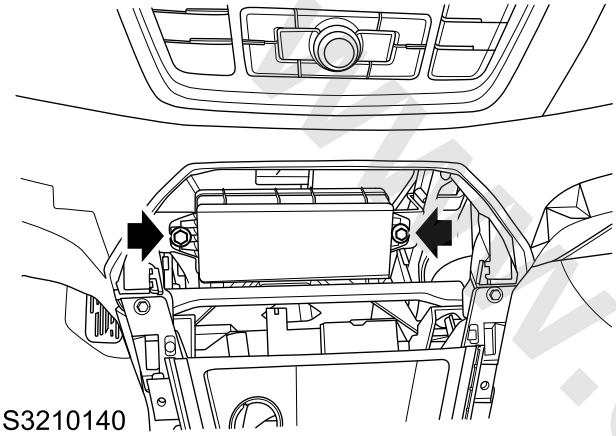

S3210140

4. Disconnect the connector of the A/C controller assembly.

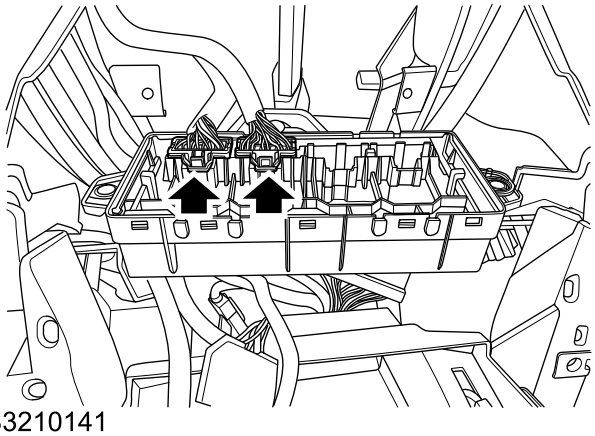

S3210141

5. Remove the A/C controller assembly.

Refit

1. Connect the connector of the A/C controller.
2. Secure the A/C controller assembly on the instrument panel beam, fit 2 bolts tighten to **2–4Nm** and check the torque.
3. Fit the A/C control panel.

☞ **A/C Control Panel Refit**

4. Connect the battery negative.
5. Programme and code the A/C controller assembly.

☞ **Self-learning and Adjustment, Programming and Coding - A/C Controller Replacement**

A/C Panel - ATC

Remove

1. Disconnect the battery negative.
2. Remove the moulding of the center console.

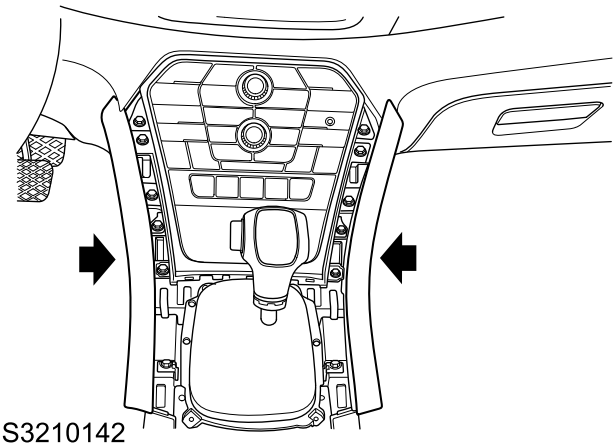

S3210142

3. Remove 4 screws fixing the A/C panel to the center console.

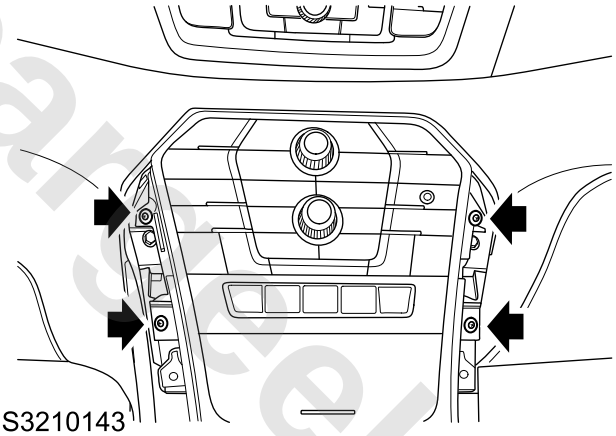

S3210143

4. Disconnect the connector of the A/C panel.

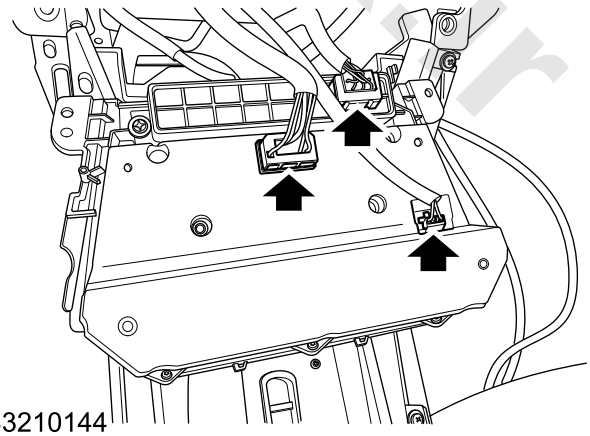

S3210144

5. Remove the A/C panel.

Refit

1. Connect the connector of the A/C panel.
2. Secure the A/C panel on the center console, fit 4 screws, tighten to **1.2–2Nm** and check the torque.

www.cargeek.ir

www.cargeek.ir

3. Fit the moulding of the center console.
4. Connect the battery negative.

Evaporator Core Temperature Sensor

Remove

1. Disconnect the battery negative.
2. Disconnect the connector of the evaporator core temperature sensor.
3. Remove the evaporator core temperature sensor by turning it to 90°.

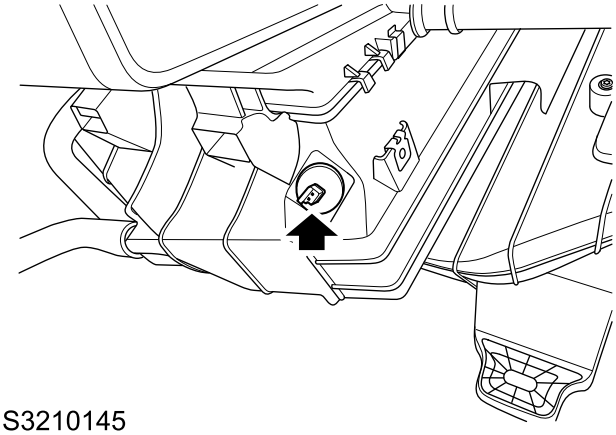

S3210145

Refit

1. Turn the evaporator core temperature sensor to 90°, and fix it to the A/C box.
2. Connect the connector of the evaporator core temperature sensor.
3. Connect the battery negative.

www.cargeek.ir

www.cargeek.ir

Solar Sensor

Remove

1. Disconnect the battery negative.
2. Loosen the clips fixing the solar sensor to the instrument panel.
3. Disconnect the connector of the solar sensor and do not drop the sensor connector into the instrument panel.

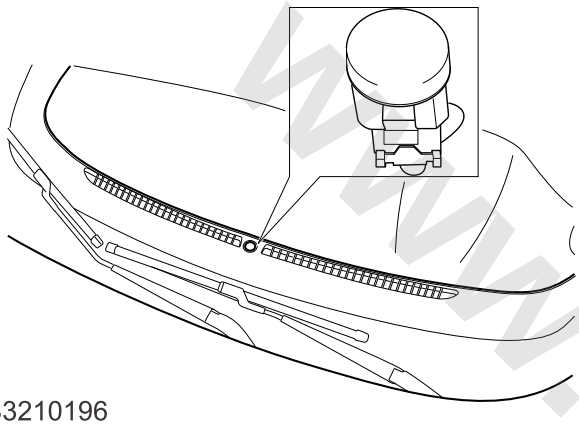

S3210196

4. Remove the solar sensor.

Refit

1. Connect the connector of the solar sensor.
2. Fit the solar sensor to the instrument panel and fasten it with clips.
3. Connect the battery negative.

Outside Ambient Temperature Sensor

Remove

1. Disconnect the battery negative.
2. Remove the outside ambient temperature sensor from the clip, and take it out from the grille under the bumper.
3. Disconnect the connector of the outside ambient temperature sensor, and remove the sensor.

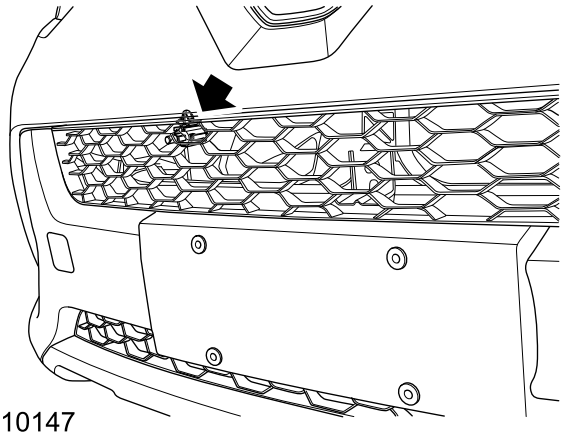

S3210147

Refit

1. Connect the outside ambient temperature sensor.
2. Fit the outside ambient temperature sensor through the inlet grille under the bumper, and fix it to the clip.
3. Connect the battery negative.

www.cargeek.ir

www.cargeek.ir

Interior Ambient Temperature Sensor

Remove

1. Remove the A/C control panel.

A/C Control Panel Remove

2. Remove the screw fixing the rear cover of the panel to the panel.

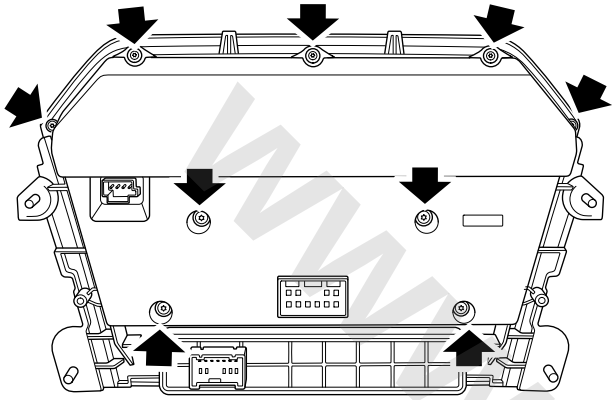

S3210181

3. Remove the interior temperature sensor.

Refit

1. Fit the interior temperature sensor to the panel.
2. Fix the rear cover to the panel, fit the screw and secure it.
3. Fit the A/C control panel.

A/C Control Panel Refit

Face Air Outlet Temperature Sensor

Remove

1. Remove the instrument panel assembly.

Instrument Panel Assembly Remove

2. Disconnect the connector of the face air outlet temperature sensor.
3. Remove the face air outlet temperature sensor from the A/C box.

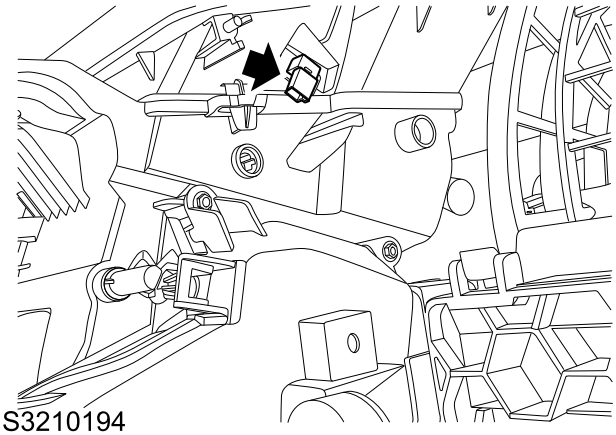

S3210194

Refit

1. Fit the face air outlet temperature sensor to the A/C box.
2. Connect the connector of the face air outlet temperature sensor.
3. Fit the instrument panel assembly.

Instrument Panel Assembly Refit

www.cargeek.ir

Footwell Air Outlet Temperature Sensor

Remove

1. Disconnect the battery negative.
2. Remove the closure panel of the passenger heater.
3. Disconnect the connector of the footwell air outlet temperature sensor.

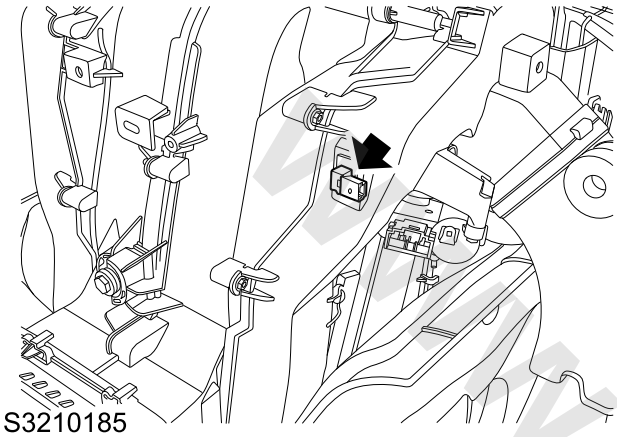

S3210185

4. Remove the footwell air outlet temperature sensor from the heater.

Refit

1. Fit the footwell air outlet temperature sensor to the heater.
2. Connect the connector of the footwell air outlet temperature sensor.
3. Fit the heater closure panel at the passenger side.
4. Connect the battery negative.

Blend Damper Servo Motor

Remove

1. Disconnect the battery negative.
2. Remove the instrument panel assembly.

Instrument Panel Assembly Remove

3. Remove 3 screws (1) fixing the servo motor of the blend damper to the A/C box assembly.

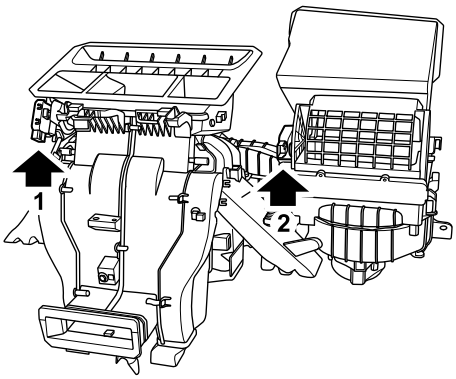

S3210146

4. Disconnect the servo motor and linkage mechanism of the blend damper.
5. Remove the servo motor of the blend damper.

Refit

1. Connect the servo motor and linkage mechanism of the blend damper.
2. Fix the servo motor of the blend damper to the A/C box assembly, fit 3 screws, tighten to **1.2Nm** and check the torque.
3. Fit the instrument panel assembly.

Instrument Panel Assembly Refit

4. Connect the battery negative.
5. Perform a self-learning for the A/C servo motor.

Self-learning and Adjustment, Programming and Coding - A/C Servo Motor Self-learning

www.cargeek.ir

Servo Motor of Recirculated Air Damper

Remove

1. Disconnect the battery negative.
2. Remove the instrument panel assembly.

☞ **Instrument Panel Assembly Remove**

3. Remove 3 screws (2) fixing the servo motor of the recirculated air damper to the A/C box assembly.

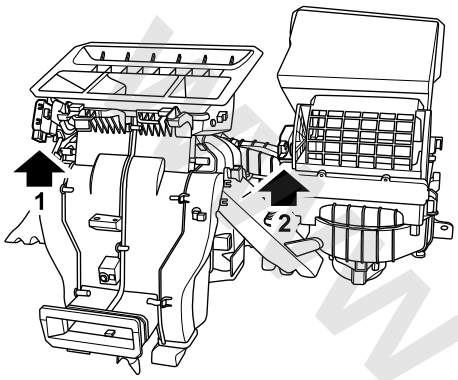

S3210146

4. Disconnect the motor and fresh/recirculated air damper linkage mechanism.
5. Remove the servo motor of the recirculated air damper.

Refit

1. Connect the motor and fresh/recirculated air damper linkage mechanism.
2. Fix the servo motor of the recirculated air damper to the A/C box assembly, fit 3 screws, tighten to **1.2Nm** and check the torque.
3. Fit the instrument panel assembly.

☞ **Instrument Panel Assembly Refit**

4. Connect the battery negative.
5. Perform a self-learning for the A/C servo motor.

☞ **Self-learning and Adjustment, Programming and Coding - A/C Servo Motor Self-learning**

Mode Damper Servo Motor

Remove

1. Disconnect the battery negative.
2. Remove the passenger side heater closure panel.
3. Remove 2 screws fixing the servo motor of the mode damper to the A/C box assembly.

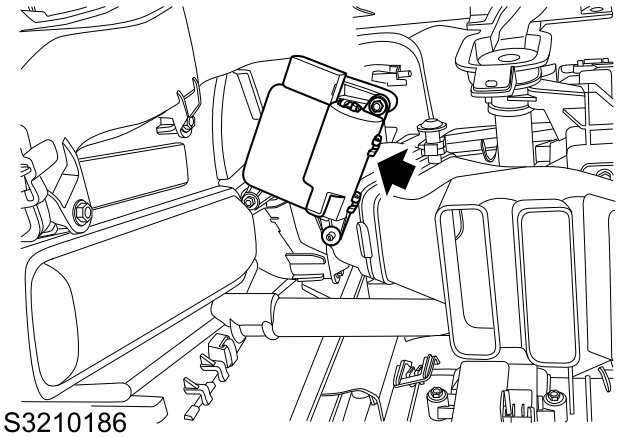

S3210186

4. Disconnect the motor and mode damper linkage mechanism.
5. Remove the mode damper servo motor.

Refit

1. Connect the motor and mode damper linkage mechanism.
2. Fix the servo motor of the mode damper to the A/C box assembly, fit 2 screws, tighten to **1.2Nm** and check the torque.
3. Fit the lower heater closure panel at the passenger side.
4. Connect the battery negative.
5. Perform a self-learning for the A/C servo motor.

☞ **Self-learning and Adjustment, Programming and Coding - A/C Servo Motor Self-learning**

www.cargeek.ir

Special Tools

www.cargeek.ir

www.cargeek.ir

Front Wheel Steering

Specifications

Torque

Description	Value
Bolt- Steering gear to front subframe	100Nm+45°
Nut-Steering outer tie rod to steering arm	40–50Nm
Bolt- Steering column to steering import shaft	20Nm+150°
Nut- Steering outer tie rod to steering gear	65–75Nm
Steering inner tie rod- Steering inner tie rod to steering gear	100–110Nm

www.cargeek.ir

www.cargeek.ir

Parameters

Type	Column Electric Power Assisted Steering
Steering Column Model	Four-way Adjustable Energy-absorbing Steering Column
Diameter of Steering Wheel	374mm
Revolution of Steering Wheel	2.7
Circumference:	
Minimum Turning Radius	11.6m
Transmission Ratio	53.4mm/R

www.cargeek.ir

www.cargeek.ir

Description and Operation

System Layout

Steering System Component Layout

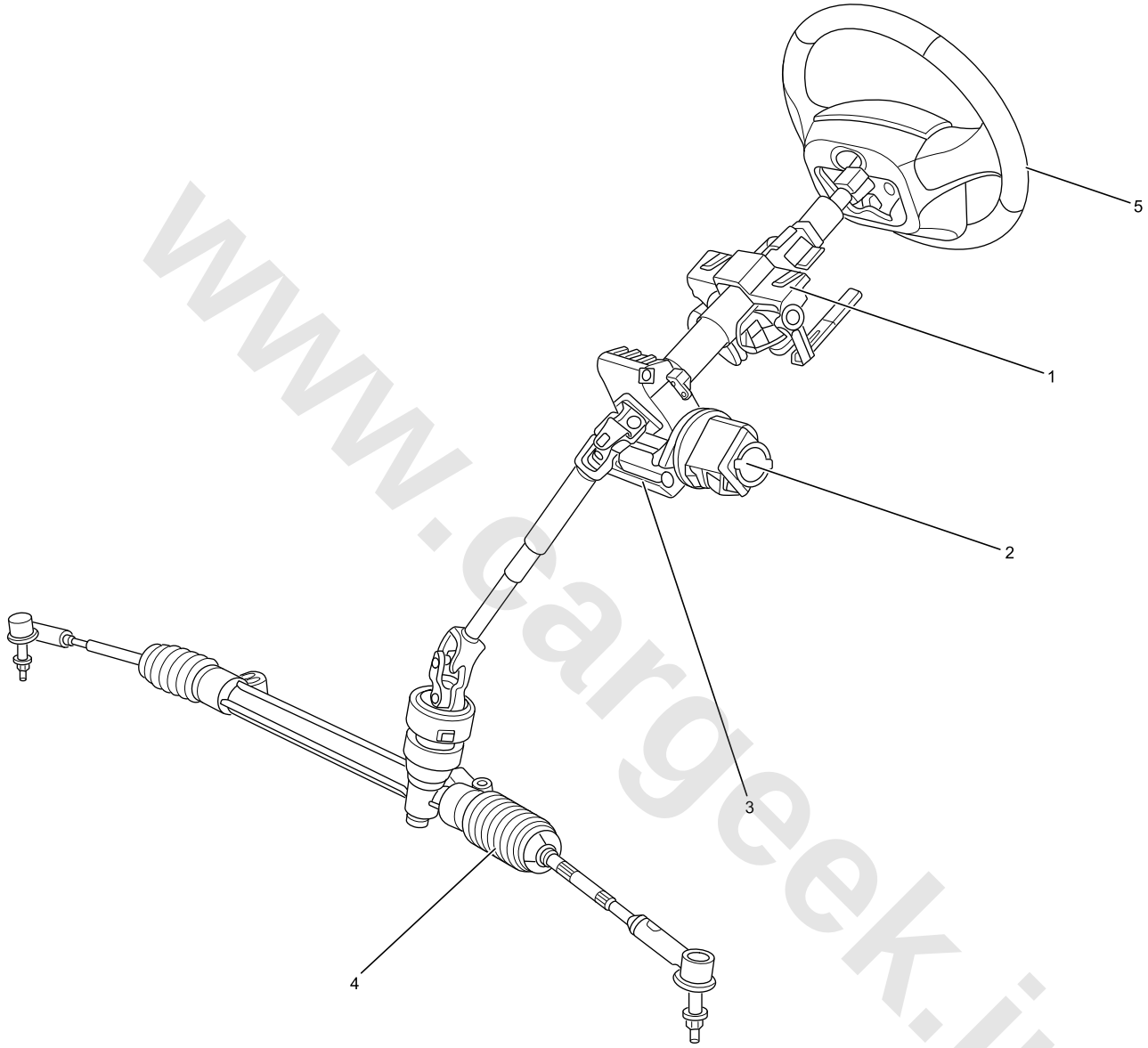

S2110101

1. Steering Column Assembly
2. Steering Motor
3. **EPS** Control Module
4. Steering Gear Assembly
5. Steering Wheel

www.cargeek.ir

www.cargeek.ir

Steering Gear Assembly Layout

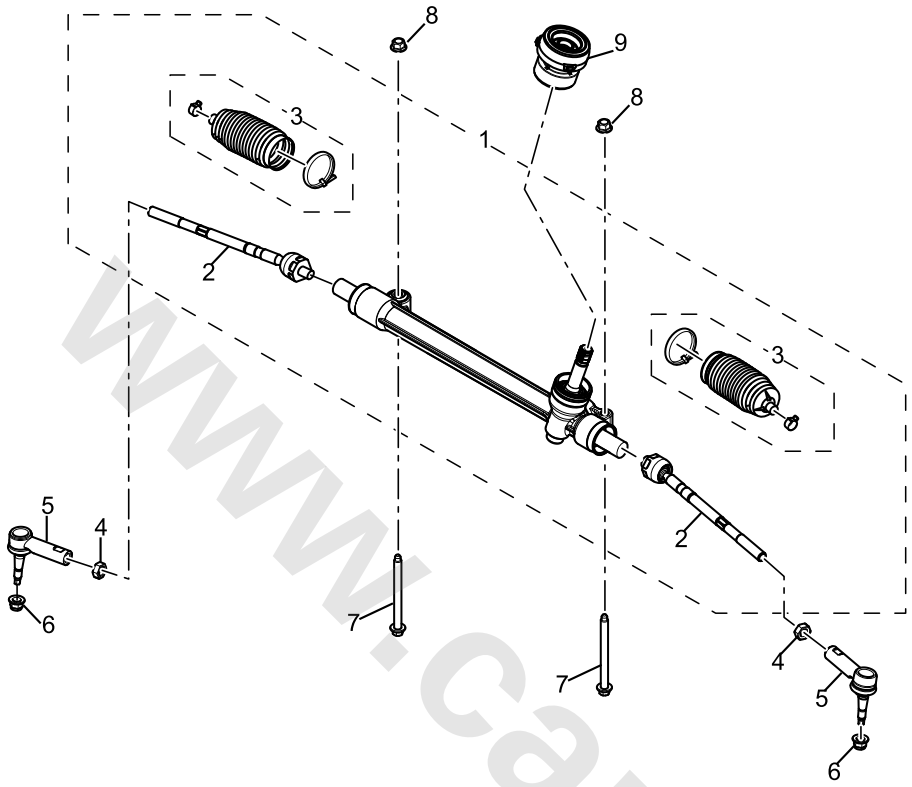

S2110004

1. Steering Gear Assembly
2. Steering Gear Inner Tie Rod
3. Steering Gear Boot Assembly
4. Nut-Inner Tie Rod Lock
5. Steering Gear Outer Tie Rod
6. Nut - Outer Tie Rod to Steering Knuckle
7. Steering Gear Bolt
8. Steering Gear Nut
9. Seal

www.cargeek.ir

Description

Overview

The motor provides auxiliary torque for the **EPS**. According to motor arrangement, the **EPS** can be divided into: steering column-assist type, pinion-assist type and rack-assist type. The motor of the steering column-assist **EPS** is fixed at one side of the steering column, which connects the steering column through the reducing mechanism and directly drives the power-assisted steering of the steering shaft. The motor and reducing mechanism of the pinion-assist **EPS** are connected with the pinion, which directly drive the power-assisted steering of the pinion. The motor and reducing mechanism of the rack-assist **EPS** directly drive the rack to provide power.

Different types of **EPS** have the same basic principle: The torque sensor is connected with the steering shaft (pinion shaft) together, when the steering shaft rotates, the torque sensor starts to operate, turns the relative rotational displacement generated by the input shaft and output shaft under the action of the torsion bar into an electric signal and transmits the signal to **ECU**, and **ECU** determines the direction of rotation of the motor and the power-assist current based on the signals from the speed sensor and torque sensor to complete real-time control power steering. Therefore, it can easily provide different powers for the motor at different speeds and ensure the vehicle is flexible at low speed and stable at high speed. The setting of the **EPS** steering behavior provides a high degree of freedom.

EPS

The **EPS** is composed of the following components:

1. **EPS** Module
2. Steering Motor
3. Torque Sensor
4. Steering Reducing Mechanism

EPS Module

The function of the electronic control unit (**ECU**) is to conduct logical analysis, make calculations and give commands to control the motor according to the signal from the torque sensor and vehicle speed sensor. Furthermore, the **ECU** is also configured with safety protection and self-diagnosis functions, the **ECU** determines if the system is in normal state by the motor current, alternator voltage and engine working condition, etc. If the system fails, the power will be cancelled automatically and the **ECU** will carry out fault diagnosis and analysis.

Steering Motor

The function of the motor is to output an appropriate auxiliary torque according to the instruction of the ECU, which is the power source of the **EPS**. The permanent magnet brushless DC motors are widely used in this application.

Torque Sensor

The torque sensor is integrated in the steering column, which measures the size and direction of the torque acted by the driver on the steering wheel, as well as the size and direction of the steering wheel angle. It is the control signal of the **EPS**. When reconnecting the battery after disconnection, initialize the steering wheel angle, for specific procedures, please refer to the "Electronic Power Assisted Steering (**EPS**) Module" under the "Self-learning and Adjustment, Programming and Coding" section.

Reducing Mechanism

The reducing mechanism of the **EPS** is connected with the motor, the function of the mechanism is to decrease the speed and increase the torque, which applies a mechanism of worm and gear.

End view and pin information of EPS module harness connector BY009

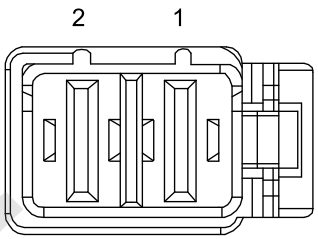

Pin No.	Description
1	KL.30
2	Ground

End view and pin information of EPS module harness connector BY035

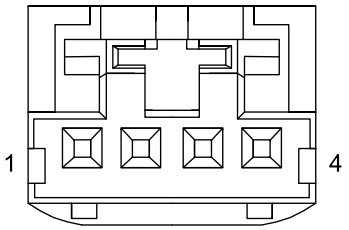

www.cargeek.ir

www.cargeek.ir

Pin No.	Description
1	Wake-up
2	Chassis CAN High
3	Chassis CAN Low
4	—

www.cargeek.ir

www.cargeek.ir

Operation

While operating the steering gear by using the **EPS** module to control the power steering motor, the **EPS** can reduce the power for vehicle steering. The **EPS** module also uses the combination of the torque sensor, motor rotation sensor, battery voltage circuit and serial data circuit to perform the system functions. The **EPS** module will monitor the vehicle speed and engine speed information through the serial data circuit to determine the magnitude of power for vehicle steering. Under low speed mode, the larger force should be provided for steering in the parking operation. At high speed, use lower power to improve road feel and direction stability.

The **EPS** module determines the desired force by using the combination of torque sensor, motor position sensor, speed and system temperature input. The **EPS** module continuously monitors the torque of the torque sensor and locates current signal. With the rotation of the steering column and steering shaft, monitor the steering input and output shaft by torque signal circuit, then use the **EPS** module to calculate the torque. The **EPS** module handles the voltage signal from the motor position sensor and the location current signal from the torque sensor, by this way, it detects and calculates the angle of the steering wheel.

The **EPS** module responds to the alteration of the torque sensor signal and voltage signal from the motor rotation sensor by controlling the current of the steering motor. The **EPS** module controls the PWM motor drive circuit to drive the 3-phase motor.

The **EPS** module can calculate the internal system temperature and protect the **EPS** from high temperature damage. In order to reduce the high system temperature, the **EPS** module will decrease the directive current flowing to the power steering motor, that is, reduce the steering power. The **EPS** module can detect faults of the **EPS**. When failure of the **EPS** is detected, the steering warning lamp on the instrument will illuminate.

The **EPS** module is provided with the "active return" function, when the driver's hands leave the steering wheel, control of the return speed can improve the driving feel and safety greatly.

The **EPS** module is also configured with the "end protection" function which can decrease the auxiliary torque and avoid noise, overheat and damage of the mechanical parts before the maximum travel of the steering gear rack is achieved.

www.cargeek.ir

www.cargeek.ir

www.cargeek.ir

Service Procedures

Steering Gear Assembly

Remove

1. Remove front wheels.

Wheel Remove

2. Remove and discard the bolt fixing the universal joint to the power steering gear.

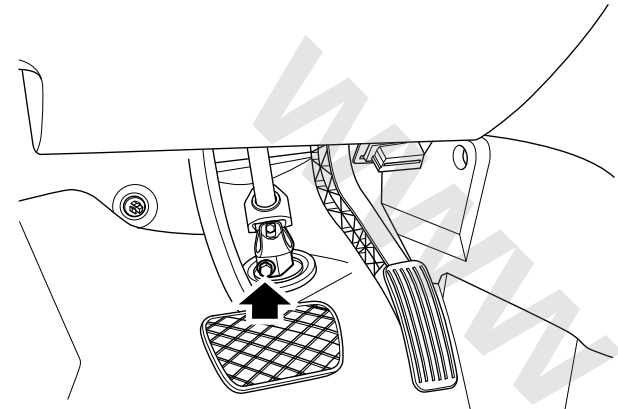

S2113105

3. Loosen the universal joint from the power steering gear.
4. Raise the vehicle on a lift.
5. Remove the nut fixing the outer tie rod of the steering gear on both sides to the wheel hub, and discard the nut. Fit a M10 nut to the outer tie rod and align it with the outer tie rod.
6. With the **T38008**, release the outer tie rod of the steering gear from the wheel hub on both sides, and remove the M10 nut from the outer tie rod.

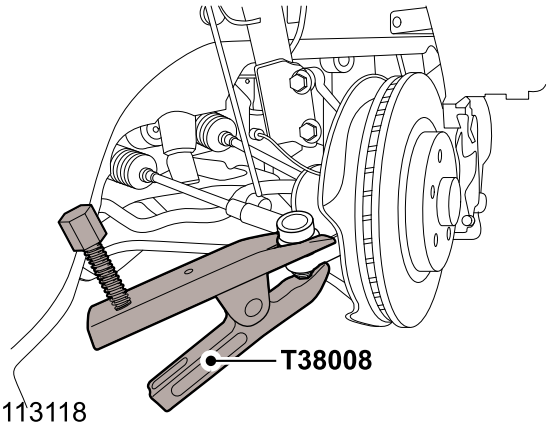

S2113118

7. Release 2 bolt and nuts fixing the steering gear to the subframe.

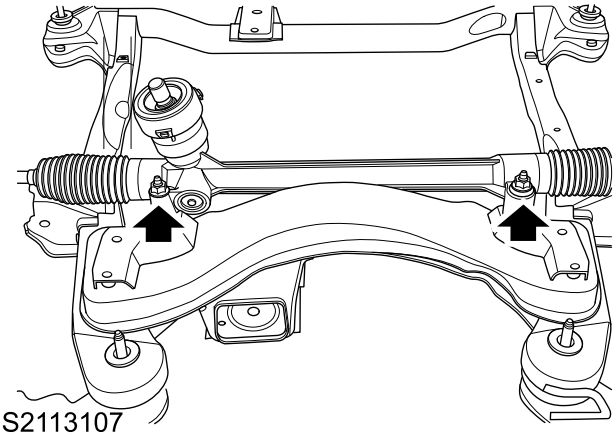

S2113107

8. Carefully draw the steering gear from the vehicle.

Refit

1. Fit the steering gear to the vehicle.
2. Fit the steering gear to the subframe, fit new bolt/nut and tighten to **100Nm+45°**.
3. Fix the outer tie rod of the steering gear on both sides to the front wheel hub, fit 1 new nut respectively and tighten to **40–50Nm**.
4. Secure the universal joint on the input shaft of the power steering gear, fit 1 new bolt and tighten to **20Nm+150°**.
5. Fit the wheels.

Wheel Refit

6. Check the alignment parameters of the front wheels.

Four-wheel Alignment

7. Perform a self-learning for the **EPS** module.

Self-learning and Adjustment, Programming and Coding - EPS Module Self-learning

www.cargeek.ir

Steering Gear Boot

Remove

1. Raise the vehicle on a lift.
2. Remove the outer tie rod of the steering gear.

☞ **Steering Gear Outer Tie Rod Remove**

3. Remove the lock nut (1) from the steering gear inner tie rod.

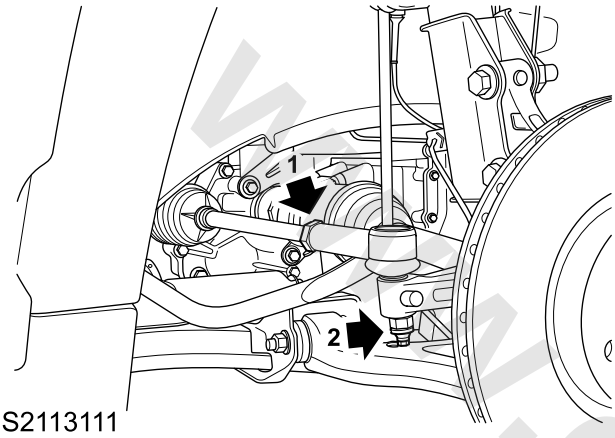

S2113111

4. Remove the outer boot clamp (1) of the steering gear, and discard the clamp.
5. Remove the inner boot clamp (2) of the steering gear, and discard the clamp.
6. Remove the steering gear boot (3) from the steering gear.

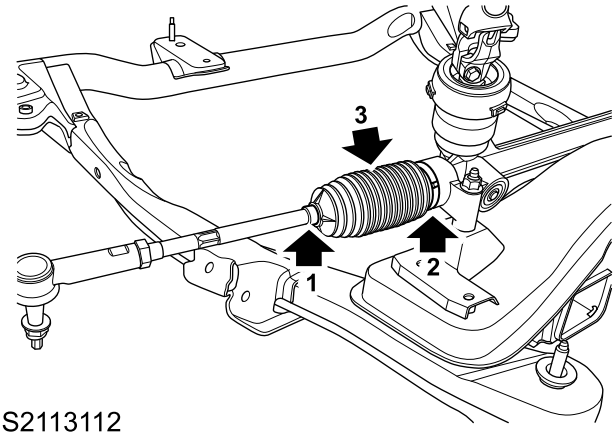

S2113112

7. Check the inner/outer tie rods of the steering gear for obvious corrosion or contamination. If no obvious corrosion or contamination, continue the repair. If obvious corrosion or contamination is found, replace the steering gear.

Refit

1. Fit the steering gear boot to the steering gear. Ensure that the steering gear boot is located in the fitting groove.
2. Fit the inner boot clamp of the steering gear to the steering gear boot.
3. Fix the outer boot clamp of the steering gear to the steering gear boot.
4. Fit the lock nut of the steering gear inner tie rod and tighten to **65–75Nm**.
5. Fit the outer tie rod of the steering gear.

☞ **Steering Gear Outer Tie Rod Refit**

6. Lower the vehicle.
7. Check the alignment parameters of the front wheels.

☞ **Four-wheel Alignment**

8. Perform a self-learning for the **EPS** module.

☞ **Self-learning and Adjustment, Programming and Coding - EPS Module Self-learning**

www.cargeek.ir

www.cargeek.ir

Steering Gear Outer Tie Rod

Remove

1. Raise the vehicle on a lift.

Warning: Do not work on or under a vehicle supported only by a jack. Always support the vehicle on safety stands.

2. Remove front wheels.

Wheel Remove

3. Release the lock nut (1) from the outer tie rod of the steering gear.
4. Remove nuts (2) fixing the outer tied rod of the steering gear to the steering arm.

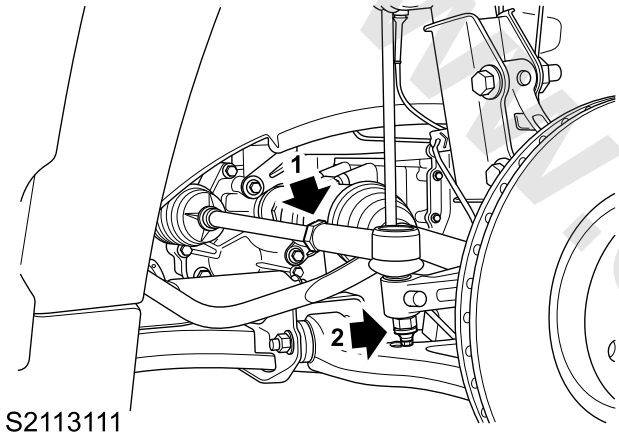

5. Fit M10 nut to the outer tie rod ball joint of the steering gear and align it with the pin end.
6. With the **T38008**, release the outer tie rod ball joint of the steering gear from the wheel hub on both sides, and remove the M10 nut from the ball jiont.

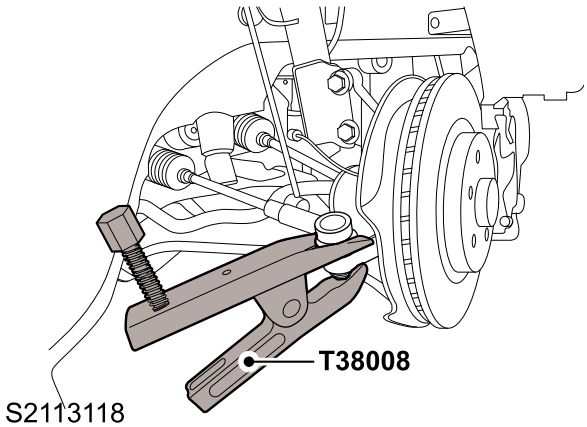

7. Remove the outer tie rod of the steering gear from the power steering gear, and mark the position of the lock nuts.

Refit

1. Fit the outer tie rod of the steering gear to the marked location of the lock nut with the ball joint up.
2. Connect the outer tie rod of the steering gear to the steering arm, fit new nuts and tighten to **40–50Nm**.
3. Tighten the lock nuts to **65–75Nm**.
4. Fit the wheels.

Wheel Refit

5. Lower the vehicle.
6. Check the alignment parameters of the front wheels.

Four-wheel Alignment

7. Perform a self-learning for the **EPS** module.

Self-learning and Adjustment, Programming and Coding - EPS Module Self-learning

www.cargeek.ir

Steering Gear Inner Tie Rod

Remove

1. Remove the steering gear boot.

Steering Gear Boot Remove

2. Place the wrench on the housing surface of the steering gear inner tie rod.
3. Remove the bolt fixing the inner tie rod of the steering gear to the steering gear, and remove the inner tie rod.

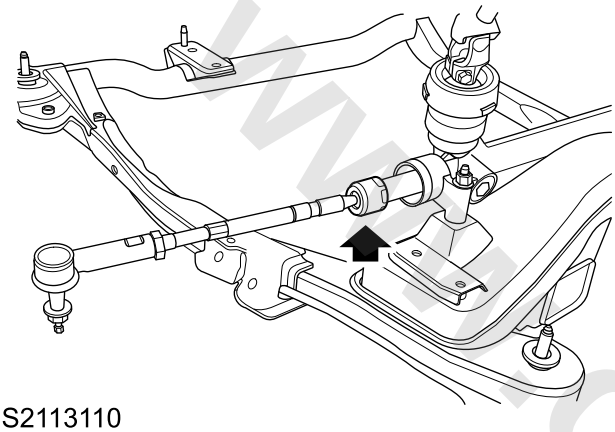

S2113110

Refit

1. Fix the inner tie rod of the steering gear to the steering gear and tighten the nut to **100–110Nm**.
2. Fit the steering gear boot.

Steering Gear Boot Refit

3. Fit the outer tie rod of the steering gear.

Steering Gear Outer Tie Rod Refit

4. Check the alignment parameters of the front wheels.

Four-wheel Alignment

5. Perform a self-learning for the **EPS** module.

Self-learning and Adjustment, Programming and Coding - EPS Module Self-learning

www.cargeek.ir

Special Tools

Tool Number	Description	Picture
T38008	Remover ball joint	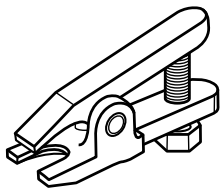 T38008

www.cargeek.ir

www.cargeek.ir

Steering Wheel and Column

Specifications

Torque

Description	Value
Bolt- Steering wheel to steering column	60–70Nm
Bolt- Steering column to steering import shaft	20Nm+150°
Bolt - Steering column to facia framework	19–25Nm
Bolt - Steering column to facia framework	26–34Nm
Screw- Steering column plaque to steering column	1.3–1.9Nm
Screw- Multi-Function Column Switch Assemble to steering column	7.5–8.5Nm

www.cargeek.ir

www.cargeek.ir

Description and Operation

System Layout

Steering Column Component Layout

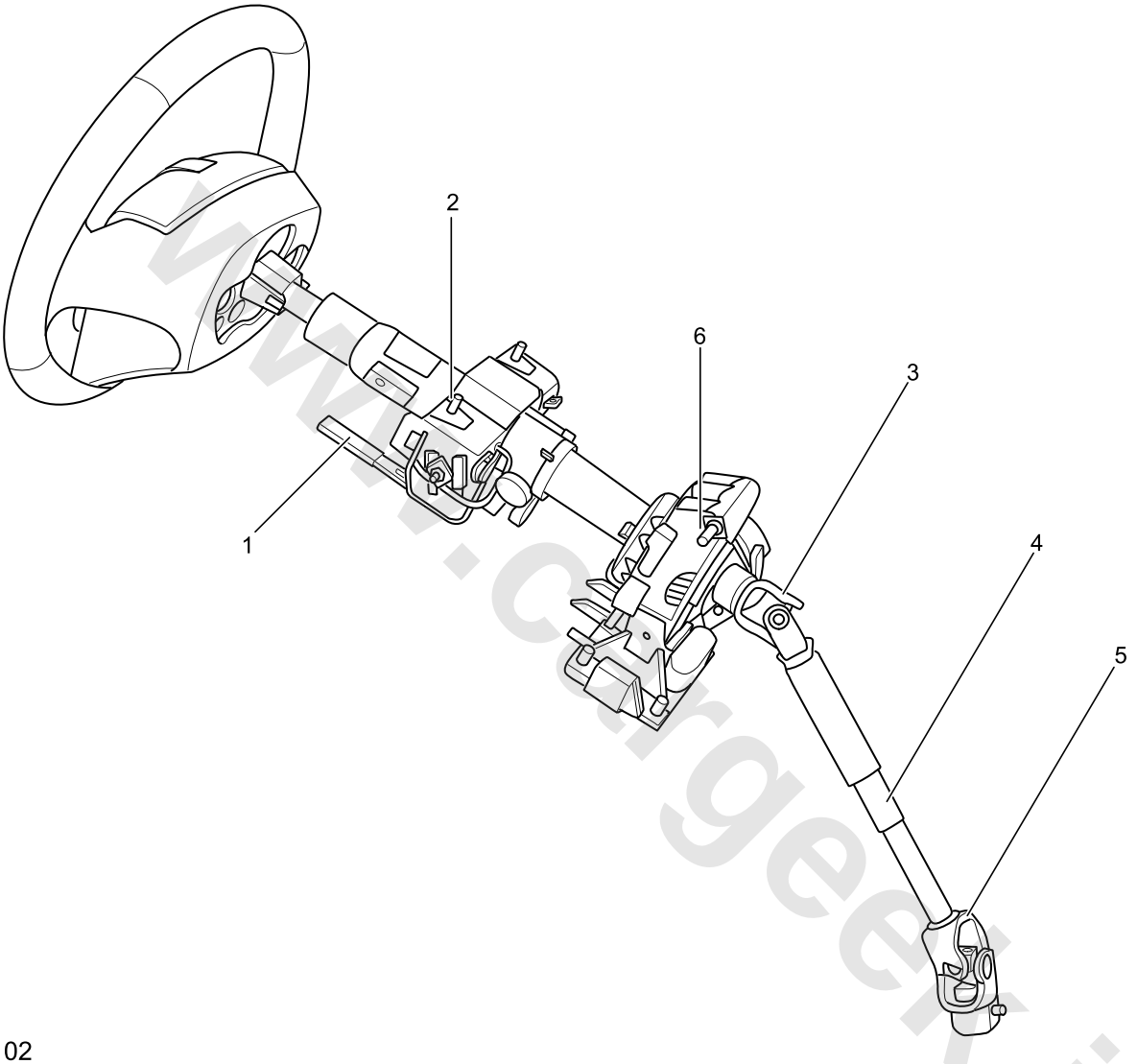

S2110102

1. Steering Column Adjusting/Unlock Handle
2. Bolt (3)
3. Steering Column Universal Joint (Upper)
4. Intermediate Shaft
5. Steering Column Universal Joint (Lower)
6. Steering Motor

www.cargeek.ir

www.cargeek.ir

System Control Diagram

EPS Control Diagram

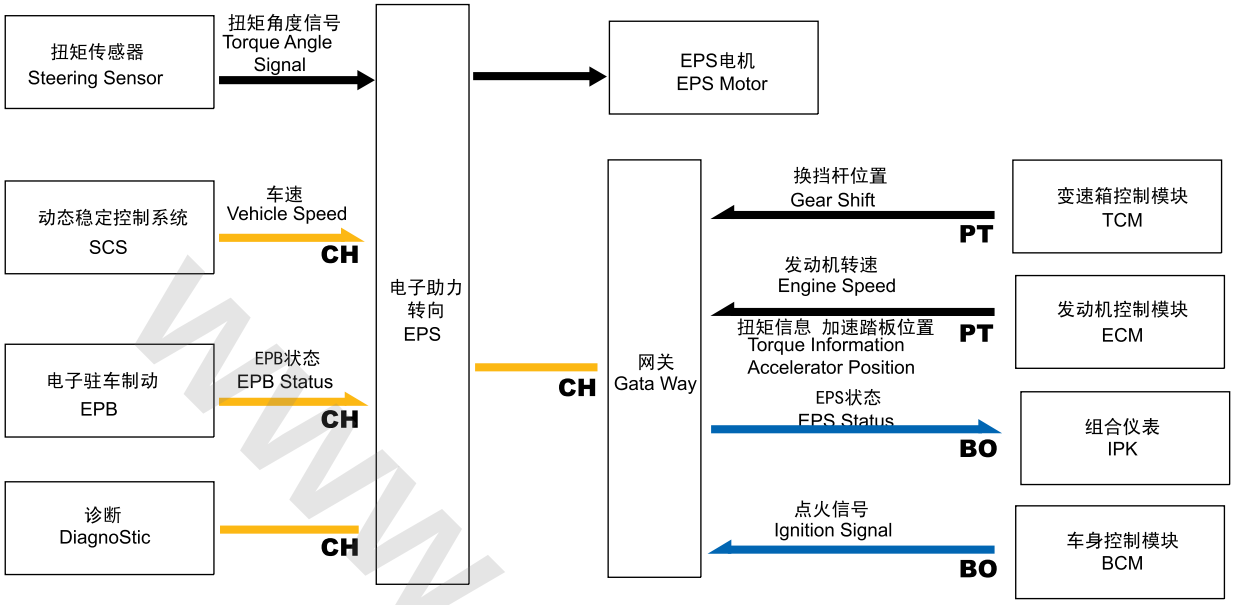

S2111002

A = Hard Wire; B = Chassis HS CAN Bus; C = Power HS CAN Bus; D = Body HS CAN Bus

www.cargeek.ir

Description

Steering Column

The steering column is a foldaway mechanism, in case of a serious vehicle crash, considering the movement of the steering system components, the upper steering column can slide away from the direction of the driver, while the lower part is flexible. The steering column is mounted on the instrument panel beam. Both steering wheel height and inclination can be adjusted at each plane, for easy adjustment of the inclination, there is a balance spring and limit liner at each adjustment end point. And there is a double-wall seal between the steering column and the dash panel. The steering wheel with a diameter of 374mm is composed of a centre wheel hub, frame casting and the material molded on the casting. The centre wheel hub of the steering wheel is connected with the steering column through the spline slot. Horn switch and entertainment control switch are all fitted on the steering wheel. All switches are connected with the rotary coupler connector through connecting wires. The airbag located at the center of the steering wheel and below the plastic cover can protect the face and upper body of the driver.

Steering Wheel Angle Sensor

The steering wheel angle sensor is located on the steering shaft assembly. The sensor is used to measure the location and rotation speed of the steering wheel. It also provides measurement signal for the SCS module.

www.cargeek.ir

www.cargeek.ir

www.cargeek.ir

Service Procedures

Steering Wheel Positioning/Adjustment

Use the steering tie rod to position/adjust the steering wheel, and do not remove the steering wheel.

Check

1. Ensure correct tyre pressure and maintain the vehicle in unladen mass condition.
2. Shake the vehicle back and forth to release the stress for steering and suspension.
3. Please apply the four-wheel aligners recommended by our company when measuring the alignment parameters.
4. Select the average value of the three readings.
5. Check if the front wheel alignment parameter is within the specified tolerance range.

Adjustment

1. Mark the position of the steering tie rod as a reference.
2. Release the lock nut of the right/left steering tie rod.

Caution: To avoid possible joint damage always use a spanner to hold steering rack outer tie rod when loosening or tightening steering rack outer tie rod lock nut.

3. Adjust the steering tie rod and acquire correct alignment parameters of the front wheels.

Tip: When rotating one side of the steering rack outer tie rod lock nut outward or inward, the other side should be rotated in the same amount of threads outward or inward.

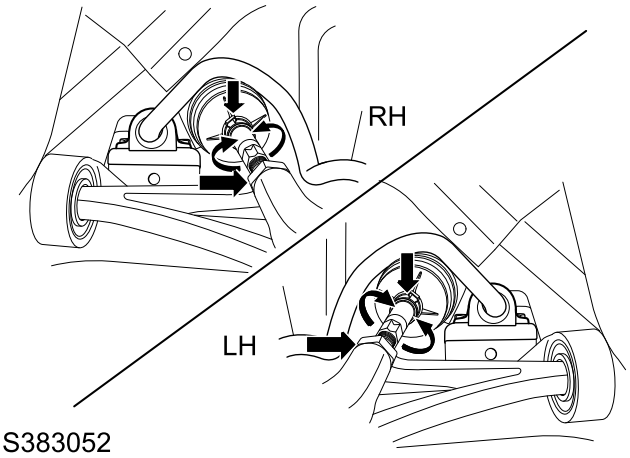

S383052

4. Recheck the alignment parameters of the front wheels.
5. Tighten the lock nuts of the left/right steering tie rod.
6. Ensure that the cover of the power steering gear is not tightened or deformed.

Steering Wheel Assembly

Remove

1. Remove the steering wheel airbag.

☞ **Steering Wheel Airbag Remove**

2. Disconnect the harness connector of the steering wheel entertainment switch.

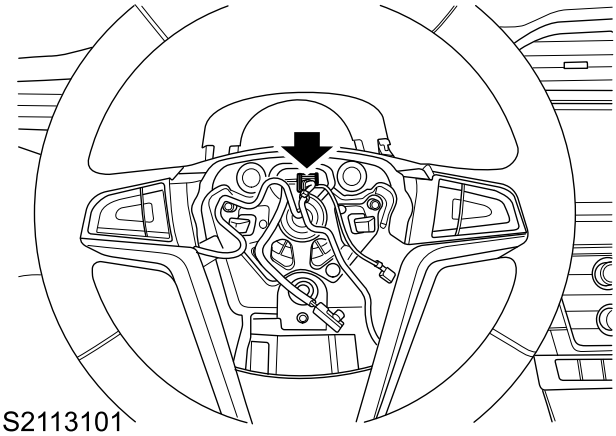

S2113101

3. Put the steering wheel in the centre and allow the wheel to be in the front.
4. With the steering wheel stopped, loosen the bolt fixing the steering wheel to the steering column, after the steering wheel is fully loosened from the splines of the steering column, remove the bolt.

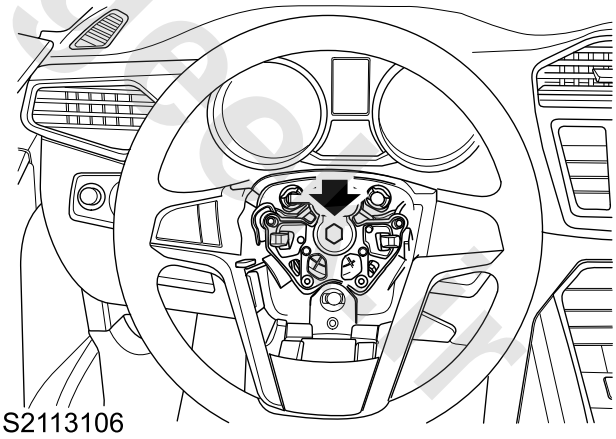

S2113106

5. Release the steering wheel assembly from the steering column.
6. Stick tape along the edge of the steering column stalk combination switch to keep it in the correct mounting position.

www.cargeek.ir

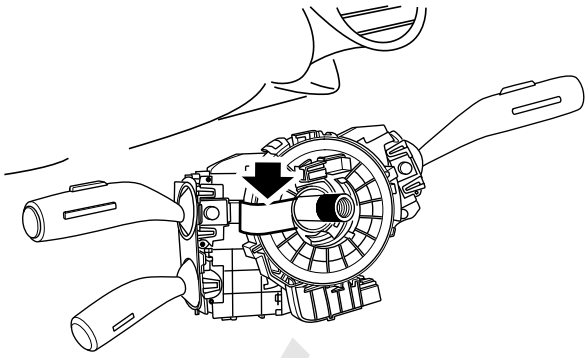

S2113042

7. Remove the entertainment switch of the steering wheel.

Steering Wheel Entertainment Switch Remove

8. Remove the shift paddle switch.

Shift Paddle Switch Remove

9. Remove the ground of the horn switch.
10. Carefully remove the harness from the steering wheel.

Refit

1. Fix the horn switch ground to the steering wheel and secure with screws.
2. Locate the steering wheel harness to the steering wheel.
3. Fit the shift paddle switch.

Shift Paddle Switch Refit

4. Fit the entertainment switch of the steering wheel.

Steering Wheel Entertainment Switch Refit

5. Remove the tape on the combination switch of the steering column stalk.
6. Ensure that the wheel is in the front, and fit the steering wheel to the steering column according to the mark.

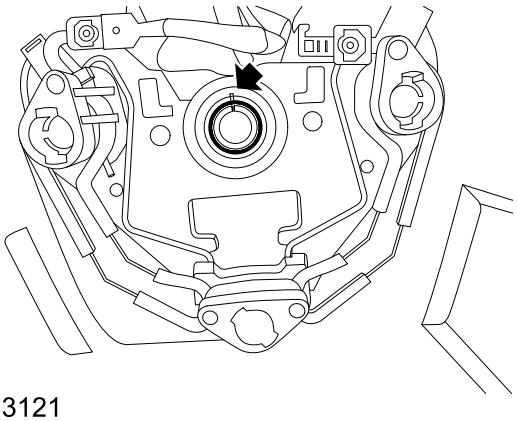

S2113121

7. Fix the steering wheel to the steering column, fit 1 bolt, tighten to **60–70Nm** and check the torque.
8. Connect the connector of the steering wheel entertainment switch.
9. Fit the steering wheel airbag.

Steering Wheel Airbag Refit

www.cargeek.ir

Blank Trim Cover of Steering Wheel Switch

Remove

1. Disconnect the battery negative.
2. Remove the steering wheel airbag.

☞**Steering Wheel Airbag Remove**

3. Carefully pry the clip open, release the finisher and blank trim cover from the steering wheel.
4. Remove 4 screws securing the blank trim cover to the finisher of the steering wheel.

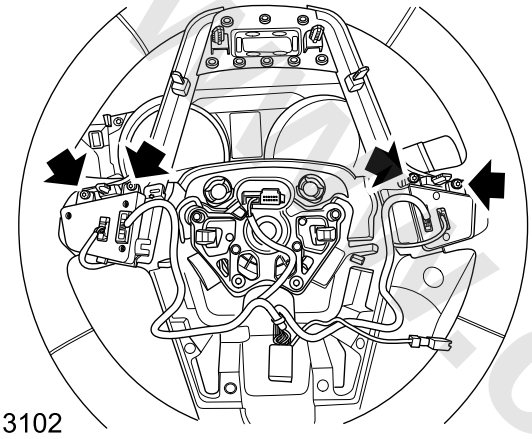

5. Remove the blank trim cover of the steering wheel.

Refit

1. Fit the blank trim cover of the steering wheel to the finisher.
2. Fit 4 screws and tighten the screw.
3. Fix the finisher assembly to the steering wheel and secure it.
4. Fit the steering wheel airbag.

☞**Steering Wheel Airbag Refit**

5. Connect the battery negative.

Steering Wheel Finisher

Remove

1. Disconnect the battery negative.
2. Remove the steering wheel airbag.

☞**Steering Wheel Airbag Remove**

3. Disconnect the connector of the steering wheel switch.
4. Carefully pry the clip open, release the finisher and switch assembly from the steering wheel.
5. Remove 4 screws securing the steering wheel switch to the finisher.

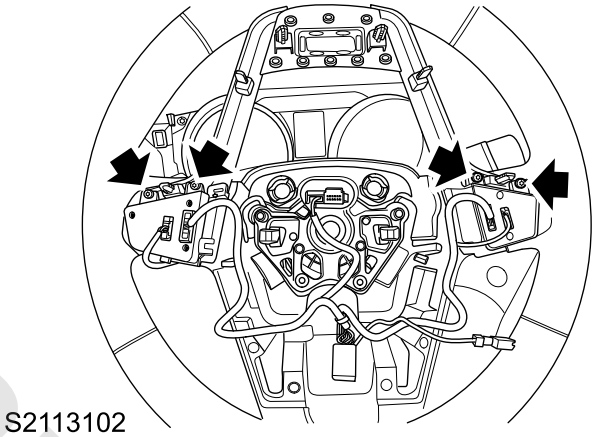

6. Remove the finisher from the steering wheel.

Refit

1. Fit the finisher to the steering wheel.
2. Fix the steering wheel switch to the finisher, fit 4 screws and tighten the screw.
3. Fix the loose steering wheel finisher and switch assembly to the steering wheel and secure it.
4. Connect the connector of the steering wheel switch.
5. Fit the steering wheel airbag.

☞**Steering Wheel Airbag Refit**

6. Connect the battery negative.

www.cargeek.ir

Steering Column Trim Cover

Remove

1. With a screwdriver, carefully disconnect the upper trim cover from the lower trim cover.
2. Remove the clip fixing the upper trim cover of the steering column to the upholstery and the IPK frame, and remove the upper trim cover.
3. Remove 3 screws fixing the lower trim cover of the steering column to the steering column.

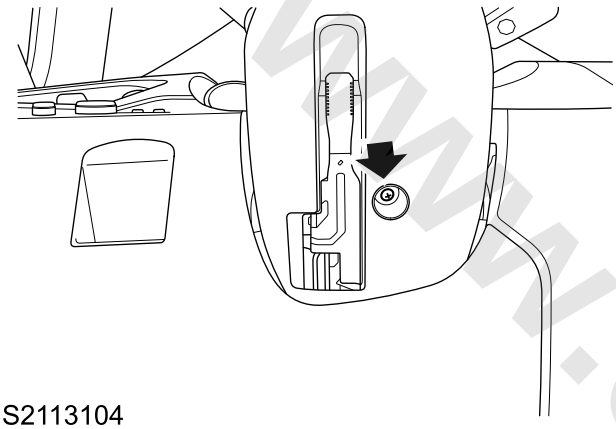

S2113104

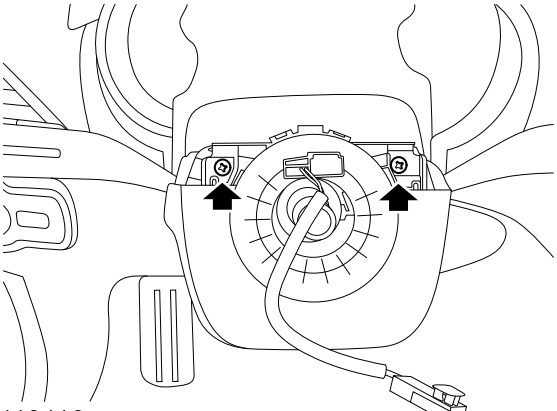

S2113116

4. Release the steering column to the lowermost position and remove the lower trim cover of the steering column.

Refit

1. Release the steering column lever and move the steering column to the upper position.
2. Fix the steering column lower trim cover to the steering column, fit 3 screws and fasten.
3. Fix the steering column upper trim cover to the upholstery and IPK frame, and secure with clips.
4. Place the upper trim cover of the steering column on the steering column, and secure it on the lower trim cover with clips.

Steering Column Assembly

Remove

1. Disconnect the battery negative.
2. Remove the steering wheel assembly.

Steering Wheel Assembly Remove

3. Remove the combination switch.

Combination Switch Remove

4. Remove the lower closing plate of the driver side instrument panel.

Driver Side Instrument Panel Lower Closing Plate Remove

5. Release the steering column to the lowermost position.
6. Disconnect the connector of the **EPS** module.

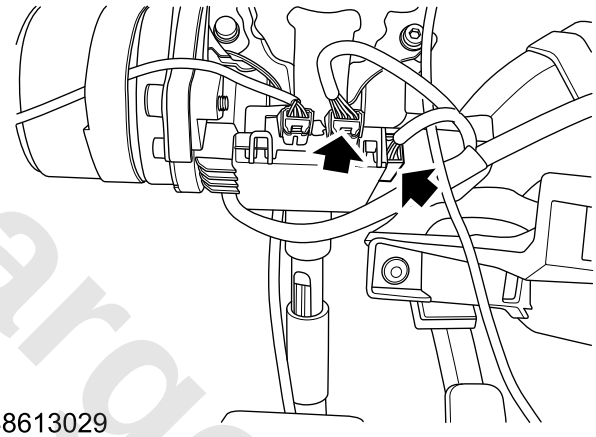

S8613029

7. Remove 3 screws fixing the lower trim cover of the steering column to the steering column.

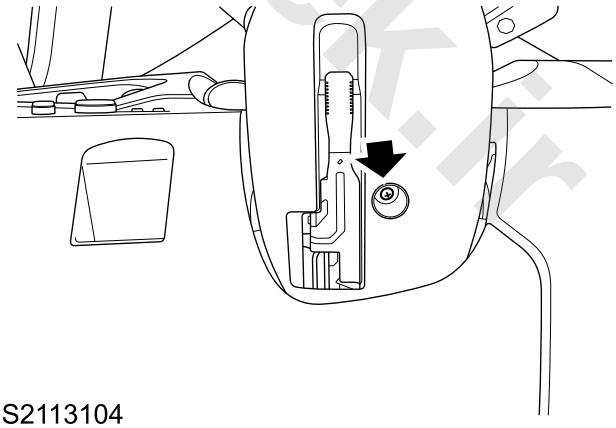

S2113104

8. Gently disconnect the upper trim cover from the lower trim cover with a screwdriver, and remove the gap.
9. Loosen the steering column adjusting handle, and remove the steering column lower trim cover.
10. Remove and discard 1 bolt fixing the steering column to the power steering gear.

www.cargeek.ir

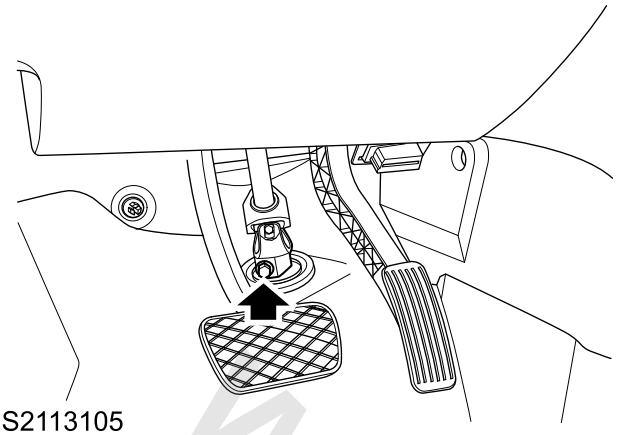

S2113105

11. With the **TCH00104**, lock the upper/lower column.

Warning: Steering colunm may be scrapped if upper steering column is pulled out of lower steering column.

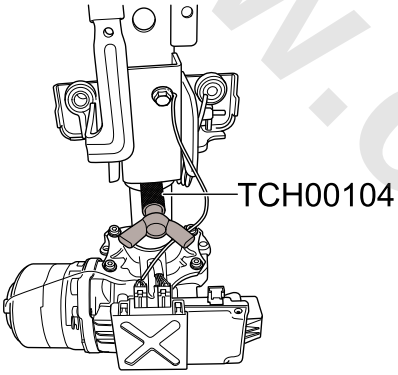

S2113031

12. Remove 3 bolts fitting the steering column to the instrument panel beam assembly.

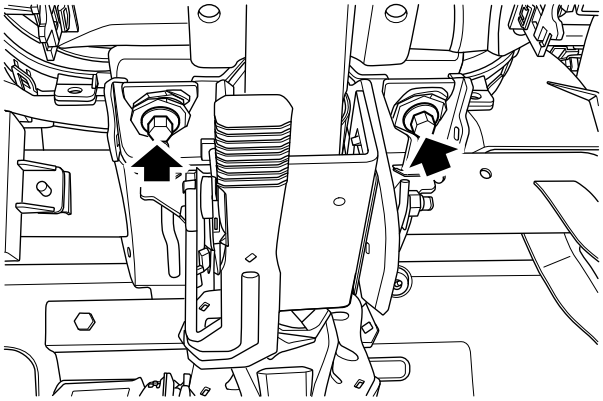

S2113108

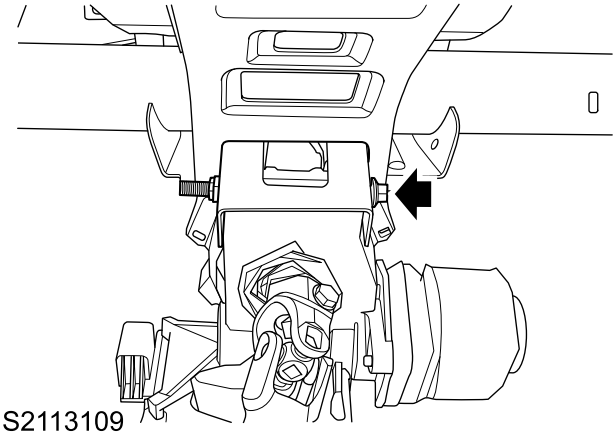

S2113109

13. Release the universal joint from the steering gear, and remove the steering column assembly from the vehicle.

Refit

1. Locate the universal joint on the input shaft of the steering gear and ensure correct orientation.
2. Fit new lock bolt and tighten the universal joint to **20Nm+150°**.
3. Fix the steering column to the instrument panel beam assembly, tighten the upper bolts to **19–25Nm** , and tighten the lower bolt to **26–34Nm**.
4. Release the steering column lever and move the steering column to the upper position.
5. Place the lower trim cover of the steering column on the steering column, and secure with clips.
6. Fix the lower trim cover of the steering column to the steering column, fit 3 screws and tighten to **1.3–1.9Nm**.
7. Connect the connector of the **EPS**.
8. Fit the lower closing plate of the driver side instrument panel.

☞**Driver Side Instrument Panel Lower Closing Plate Refit**

9. Fit the combination switch.

☞**Combination Switch Refit**

10. Fit the steering wheel assembly.

☞**Steering Wheel Assembly Refit**

11. Connect the battery negative.
12. Programme and code the EPS module.

☞**Self-learning and Adjustment, Programming and Coding - EPS Replacement**

www.cargeek.ir

www.cargeek.ir

Steering Wheel Entertainment Button

Remove

1. Remove the steering wheel molding.

Steering Wheel Molding Remove

2. Remove 4 screws fixing the entertainment switch of the steering wheel to the steering wheel molding.

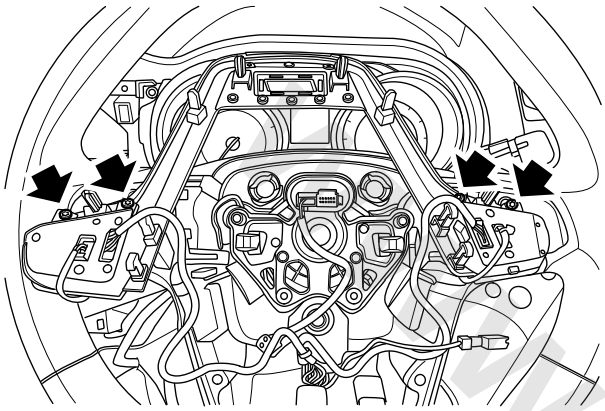

S7265001

3. Disconnect 4 harness connectors at the rear of the entertainment switch of the steering wheel.
4. Remove the entertainment switch of the steering wheel.

Refit

1. Fix the steering wheel entertainment button to the steering wheel molding, and secure with 4 screws.
2. Connect 4 harness connectors to the back of the steering wheel entertainment button.
3. Fit the steering wheel molding.

Steering Wheel Molding Refit

4. Connect the battery negative cable.

Shift Paddle Switch

Remove

1. Remove the entertainment switch of the steering wheel.

Steering Wheel Entertainment Switch Remove

2. Release 4 screws fixing the left/right shift paddle switch to the steering wheel.

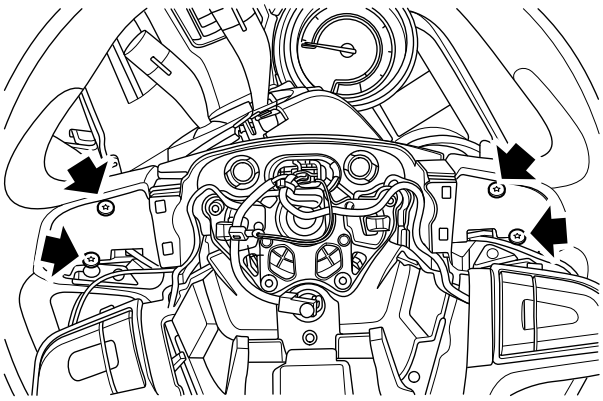

S7265002

3. Release the clip and remove the left/right shift paddle switch from the back of the steering wheel.
4. Disconnect the harness connector from the shift paddle switch to remove the shift paddle switch.

安装

1. Connect the shift paddle switch harness connector.
2. Fit the left and right shift paddle switch on the back of the steering wheel respectively, and secure them with 4 screws.
3. Fit the steering wheel entertainment switch.

Steering Wheel Entertainment Switch Refit

www.cargeek.ir

Steering Column Combination Switch

Warning: It is imperative that before any work is undertaken on the SRS system the appropriate information is read thoroughly.

SRS Precautions

Warning: Always remove the ignition key from the ignition switch, disconnect the vehicle battery and wait 10 minutes before commencing work on the SRS system.

Caution: Before disconnecting or removing components, ensure the immediate area around joint faces and connections are clean. Plug open connections to prevent contamination.

Remove

1. Disconnect the battery negative.
2. Remove the steering wheel assembly.

Steering Wheel Assembly Remove

3. Fix the clock spring with tapes, ensure it will not move left and right (relative to the combination switch bracket) and is always in the center.
4. Remove the steering column shield.

Steering Column Shield Remove

5. Remove the trim panel fixed by clips between the lever switches of the cruise control and direction indicator lamp/high beam.
6. Remove 6 screws (vehicles without cruise control use 4 screws) fixing the lever switch to the steering column.

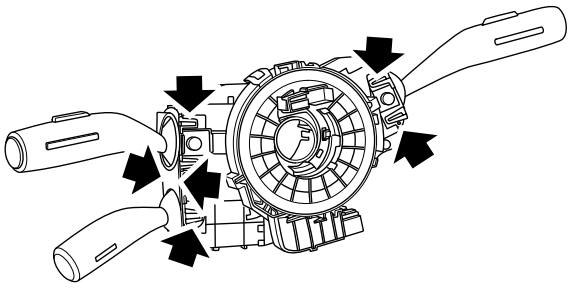

S7235000

7. Disconnect the 5 harness connectors of the clock spring, wiper/washer, direction indicator lamp/high beam and cruise control (if fitted).
8. Remove the lever switch of the clock spring, wiper/washer, direction indicator lamp/high beam and cruise control (if fitted) respectively.
9. Release the screw to remove the clock spring from the steering column, and take care not to damage the tape.

Refit

Caution: If the peg on a new rotary coupler is broken, or if you suspect that the rotary coupler has been dropped or mishandled, discard the coupler.

1. Before fitting, ensure the red locating pin of the clock spring is not removed or damaged and the front wheels face the front.
2. Ensure the clock spring to be fitted is in the center, if it is not, gently rotate the rotor counterclockwise to the end, then turns it clockwise for about 2.7 circles. Align the connector clip with the Lock Pin position (this location is the center).

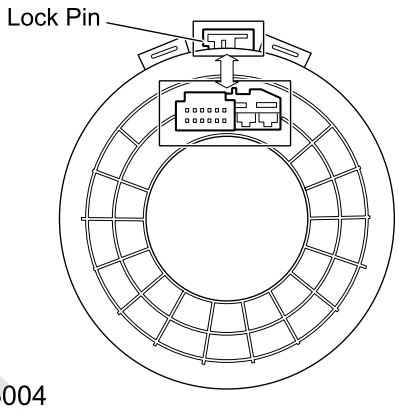

S7265004

3. Fit the clock spring to the steering column and connect the harness connector.
4. Connect the harness connector of the lever switch of the direction indicator lamp/high beam, wiper/washer and cruise control (if fitted) respectively, and fix it to the combination switch bracket with 6 screws (vehicles without cruise control use 4 screws).
5. When fitting a new combination switch assembly to the steering column, ensure the front wheels face the front, place the combination switch assembly above the steering column, fit it into the steering column as an assembly and locate it by turning from side to side.
6. Tighten the screw under the combination switch bracket to **7.5–8.5Nm** and ensure the combination switch assembly will not loose.

www.cargeek.ir

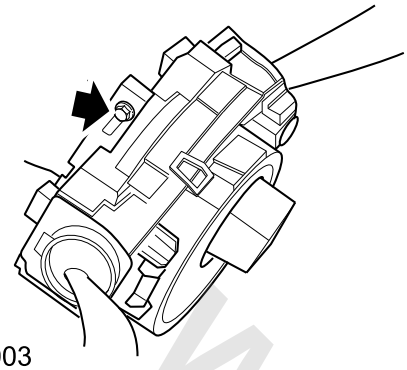

S7265003

7. Fit the steering column shield.

☞ **Steering Column Shield Refit**

8. Fit the steering wheel assembly.

☞ **Steering Wheel Assembly Refit**

9. Connect the battery negative cable.
10. Check the system, rotate each lever of the combination switch and check if it can work.
11. Check if the button of the entertainment switch on the steering wheel can work.
12. For vehicles with **SCS**, programme and code the **SAS**.

☞ **Self-learning and Adjustment, Programming and Coding - SAS Replacement**

www.cargeek.ir

www.cargeek.ir

Special Tools

Tool Number	Description	Picture
TCH00104	The fixed pin of steering column	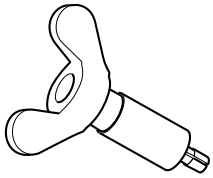 TCH00104

www.cargeek.ir

www.cargeek.ir

www.cargeek.ir

Wheel Alignment

Specifications

Torque

Description	Value
Nut- steering rod outer ball joint	70±5Nm
Bolts- rear upper arm assembly to rear subframe	100±10Nm
Nut- lateral rod assembly to rear subframe	100±10Nm

www.cargeek.ir

www.cargeek.ir

Parameters

Four-wheel alignment parameters:	
Front Wheel	
Wheel Camber - Empty Load Condition	-0°9¢± 45¢
King Pin Caster - Empty Load Condition	4°48¢± 45¢
Caster Angle of King Pin	12°42¢± 45¢
Total Toe - Empty Load Condition	0°8¢± 10¢
Rear Wheel	
Wheel Camber - Empty Load Condition	–0°60¢± 45¢
Toe-in	0°12¢± 12¢

www.cargeek.ir

www.cargeek.ir

Description and Operation

Description

Description of Camber Angle

The camber angle refers to the wheel deviation angle from the vertical direction when observed from the front of the vehicle. When the wheel top tilts outward, the camber is positive (+). When the wheel top tilts inward, the camber is negative (-). How it tilts depends on the deviation angle from the vertical direction. The value of the vehicle camber angle can affects the direction control and tire wear.

- Large positive camber angle will cause early wear of the outside of the tire and excessive wear of the suspension parts.
- Large negative camber angle will cause early wear of the inside of the tire and excessive wear of the suspension parts.
- If the difference between the camber angles of the two sides is 1° or above, the vehicle will deviate to the side with a larger positive camber angle.

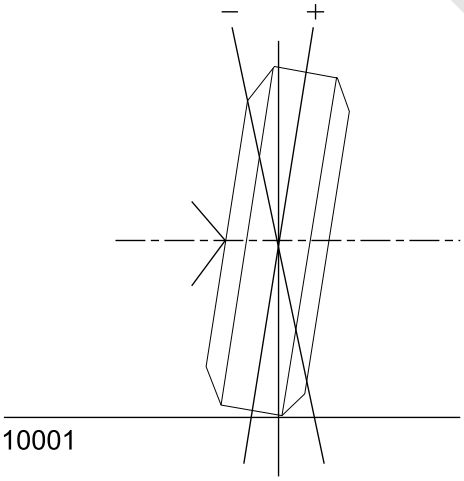

S2310001

Description of Caster Angle

The caster angle is the front/rear inclination of the highest point of the steering axis when viewed from the side of the vehicle. The rear inclination is positive, and the front inclination is negative. The caster angle affects direction control during steering, but does not affect tire wear. Vehicle height has a great impact on the caster angle, so it is important to keep the vehicle at the height designed. Overload, fatigue or loose rear spring will affect the caster angle. When rear vehicle is lower than the designed body height, the front suspension moves towards the direction with a bigger positive caster angle. When rear vehicle is higher than the designed body height, the front suspension moves towards the direction with a smaller positive caster angle.

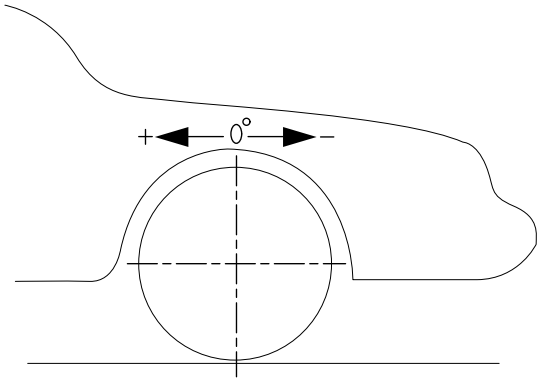

S2310002

When the positive caster angle is small, it is hard to turn at higher speed and the wheel returnability decreases after turning. If the positive caster angle of one of the wheels is larger than others, the wheel will tilt to the center of the vehicle. In this case, even a minimum positive caster angle can lead to deviation.

Description of Runout

Vehicle runout refers to the magnitude of the force to be applied on the steering wheel to keep the vehicle running in straight line when it runs in a constant high speed on a typical straight way.

Tip: Vehicles will tend to lead/pull in the direction of the road slope as part of normal operation.

Runout generally can be caused by the following factors:

- Slopes
- Change of tire structure
- Wheel alignment (left/right caster angle difference and camber difference of front wheels)
- Unbalanced steering gear
- Wrong calibration of the **EPS** steering position/torque sensor

Description of Steering Memory

It refers to the situation where vehicle runout can occur in the direction where the driver just steered. In addition, after turning to the opposite direction, vehicle runout still can occur in this direction.

Description of Scrub Radius

Theoretically, the scrub radius shall be kept as small as possible. Generally, the steering axis inclination (SAI) crosses with the centerline of the tire and the wheel below the road, which forms a positive scrub radius. In sliding column structure, the steering axis inclination (SAI) is much larger than the long arm/short arm suspension system. This allows the steering axis inclination (SAI) to cross with the wheel camber angle above the road, which forms a negative scrub radius. A better directional stability can be achieved by smaller scrub radius.

www.cargeek.ir

www.cargeek.ir

If aftermarket add-on wheels are fitted, the vehicle will offset excessively, which can cause a substantial increase of the scrub radius. The newly fitted wheel may cause further deviation of the tire centerline from the spindle. This can cause increase of the scrub radius.

A larger scrub radius may cause severe shimmy when the tire impacts uneven roads. Four-wheel drive vehicles which are fitted with large wheels, use the steering damper to compensate the increased scrub radius. Conventional methods shall not be used directly to measure the scrub radius. The scrub radius is geometrically designed by the engineer during the design of the suspension system.

Description of Thrust Angle

The front wheels locate the vehicle or do turning work. The rear wheel controls the track of the vehicle, which relates to the thrust angle (3). The thrust angle is the driving track of the rear wheels. Theoretically, the thrust angle is geometrically consistent with the body centerline (3).

The toe angle of the left rear wheels shown is positive which causes the thrust line (1) to deviate from the center. The deviation from the centerline here is known as the thrust angle.

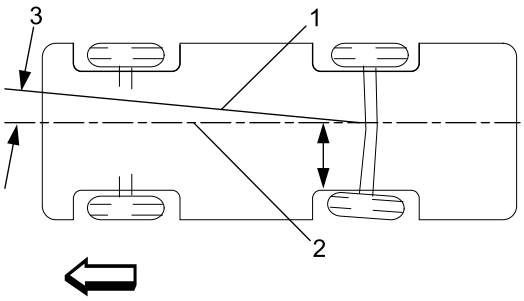

S2310003

If the thrust angle is wrong, the driving track of the vehicle may appear to be that of a dog, and the steering wheel cannot return or the driver may wrongly think the axle curves. Check the thrust angle when aligning the wheels.

If the thrust angle is positive, the thrust line points to the right vehicle (RHS).

If the thrust angle is negative, the thrust line points to the left vehicle (LHS).

If the thrust angle exceeds the specified value, change of the relation between the axle and the body can change the reading of the thrust angle.

If positive (+) value is out of the specified range (right vehicle moves forwards and/or left vehicle moves backwards), the trust angle will move to zero angle.

If the thrust angle is negative (-) (the right vehicle moves backwards and/or left vehicle moves forwards), the trust angle will also move to zero angle.

Description of Toe

Toe is the measurement by which the front of a wheel points inward or outward, compared to a true straight-ahead position. When the wheel points inward, the toe is positive (+). When the wheel points outward, the toe is negative (-). Toe is a fraction of a degree. The function of the toe is to keep the wheels rolling in parallel. The toe can also compensate the small offset from the wheel support system when the wheel moves forward. In other words, if set the wheels to positive wheel toe when the vehicle is still, then the wheels at both sides will roll in parallel when the vehicle is running. Improper toe will lead to early tire abrasion and unsteady rotation angle.

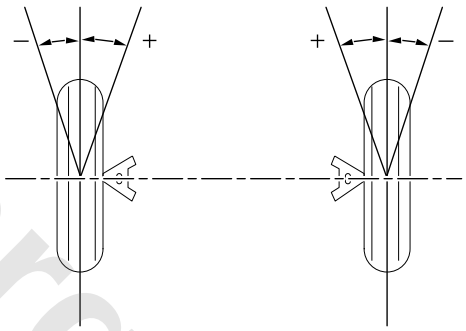

S2310005

Description of Torque Steering

In the event of sudden or hard acceleration, the vehicle will deviate from one direction. During deceleration, the vehicle will deviate from the other direction.

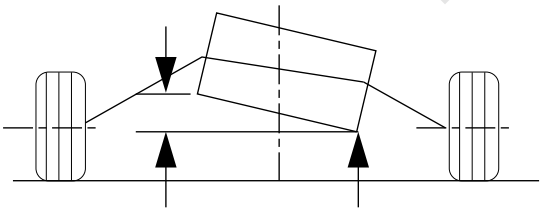

S2310004

For a specific vehicle, the following factors can cause obvious torque steering:

- Tires with a smaller right front diameter can generate a right guide torque. Check the brand, structure or dimension of the front tires. If the tires are similar,

www.cargeek.ir

exchange the front tires at both sides and retest the vehicle. The tire and wheel assembly can greatly affect the calibration of the torque steering.

- The pressure of the right front and left front tires differs significantly.
- The difference between the left axle angle and the right axle angle (front view) may cause obvious steering deviation. Deviation may happen on the side with maximum inclination angle, i.e. the location where the axle slopes down from the differential to the wheel. The axle tilts down from the differential. Tilt between the transaxle surface and the level surface can be considered as the inclination of the axle. The higher transaxle surface (see the left of the figure) has a maximum down axle inclination.

Description of Sway

When applying force manually on the steering wheel, the vehicle in the straight-line direction uncontrollably drifts or deviates to one side, this is referred to as the sway. When the vehicle is too sensitive to external disturbance (such as rough roads and side wind, it will sway, and the situation can be worsened by poor returnability of the steering mechanism.

www.cargeek.ir

www.cargeek.ir

Service Procedures

Four-wheel Alignment

Check

1. Only equipment approved by the company can be used for four-wheel alignment.
2. The equipment must be calibrated according to the manufacturer's instructions.
3. Ensure that the vehicle data input into the equipment is correct.
4. Check the ball joint of the steering tie rod/front lower swing arm and wheel bearing for wear. Replace or repair it if necessary.
5. Check and adjust the tyre pressure.
6. Raise the vehicle on a four-wheel aligner.
7. Ensure that the vehicle is in unladen mass condition.

General Information

8. Ensure that the wheel mounting clamp has been adjusted to a correct specification and has been fixed firmly to the vehicle.
9. Ensure that the camera is fitted and aligned properly.
10. Align the wheels according to the manufacturer's instruction. Lower the vehicle and keep the vehicle suspension in normal state.
11. Ensure that the steering wheel is positioned in the centre.

Adjustment

1. Observe the readings indicated on the test equipment, and adjust the four-wheel alignment dada according to the requirements.

General Information

2. Front Wheel Toe-in Adjustment:
   a. Release the lock nut (1) of the steering tie rod.
   b. Adjust the steering tie rod and adjust the front wheel alignment parameter to the specified value.
   c. Tighten the lock nuts to **70±5Nm**.
   d. For the other side, repeat the above steps.

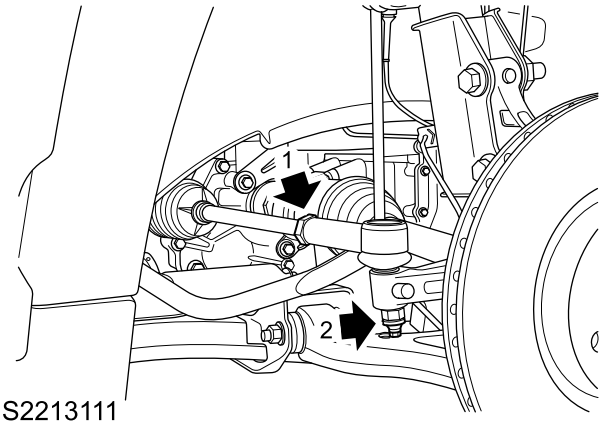

S2213111

3. Rear Wheel Camber Adjustment:
   a. Release the nut (1) inside the rear lower swing arm.
   b. With a spanner, rotate the eccentric bolt until the rear wheel camber falls within the specified range.
   c. With another spanner, tighten the lock nut to **100±10Nm**.
   d. For the other side, repeat the above steps.

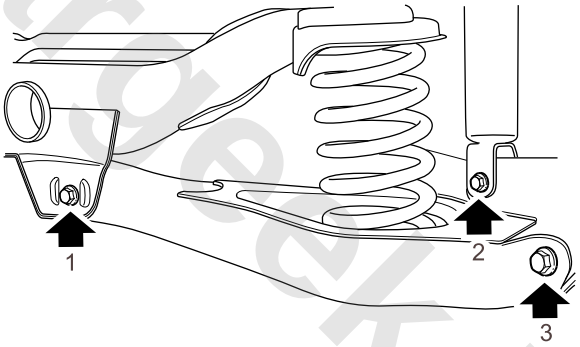

S2223111

4. Rear Wheel Toe-in Adjustment:
   a. Release the nut (2) fixing the front end of the rear horizontal push rod to the rear subframe.
   b. With a spanner, rotate the eccentric bolt 2 until the rear wheel toe-in falls within the specified range.
   c. Tighten the lock nut to **100±10Nm**.
   d. Repeat the above steps for the other side.

www.cargeek.ir

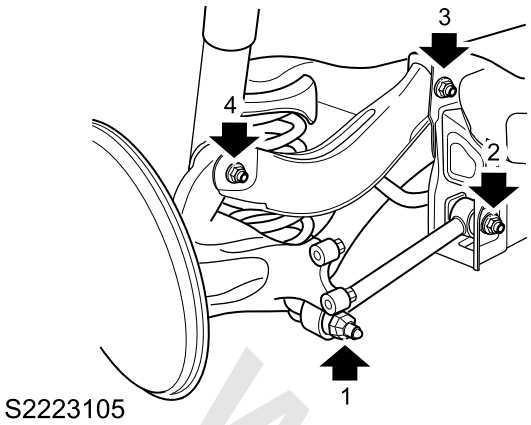

www.cargeek.ir

www.cargeek.ir

Front Suspension

Specifications

Torque

Description	Value
Bolts- front lower arm to front subframe	120±10Nm
Bolts- FR Lower arm rear to front subframe	90Nm + 120°
.Nut- front knuckle to front lower arm	95±10Nm
Bolt - ASM-FR sensor to bodywork	7–10Nm
Nut- front lower arm ball joint to front lower arm	90–110Nm
Nut- front strut damper top mounting	65–75Nm
Nut- front damper to body	50–65Nm
Bolts - front damper to hub	90–110Nm
Nuts- anti-roll bar links to damper	40–50Nm
Bolts- front anti-roll bar to front subframe	50–65Nm
Bolt- Steering gear to front subframe	100Nm+45°
Bolt- front subframe to body	90Nm + 180°
Bolts- front subframe brace	80±10Nm
Nut-Steering outer tie rod to steering arm	40–50Nm
Nuts- anti-roll bar links to anti-roll bar	50–65Nm
Bolts- front knuckle asm to bearing	70Nm + 90°
Bolts- front knuckle asm to front damper	140–170Nm
Bolt-Front wheel speed sensor to wheel carrier	7–10Nm
Screw-Front brake pan to bearing	7–10Nm
Bolt-Front brake caliper assembly to front knuckle	190–210Nm

www.cargeek.ir

www.cargeek.ir

Parameters

Model	The front suspension is an independent McPherson shock absorber. This shock absorber and the fork type lower swing arm are outside the front subframe, which provides the front suspension with the anti-dive and anti-squat features.
Diameter of Front Horizontal Stabilizer Bar	23mm
Data of Front Coil Spring: • Total Coils • Effective Coils • The diameter of wire • Free Length:	 • 5.8 • 4.95 • Appr. 13.6mm • Appr. 353mm

www.cargeek.ir

www.cargeek.ir

Description and Operation

System Layout

Front Suspension Layout

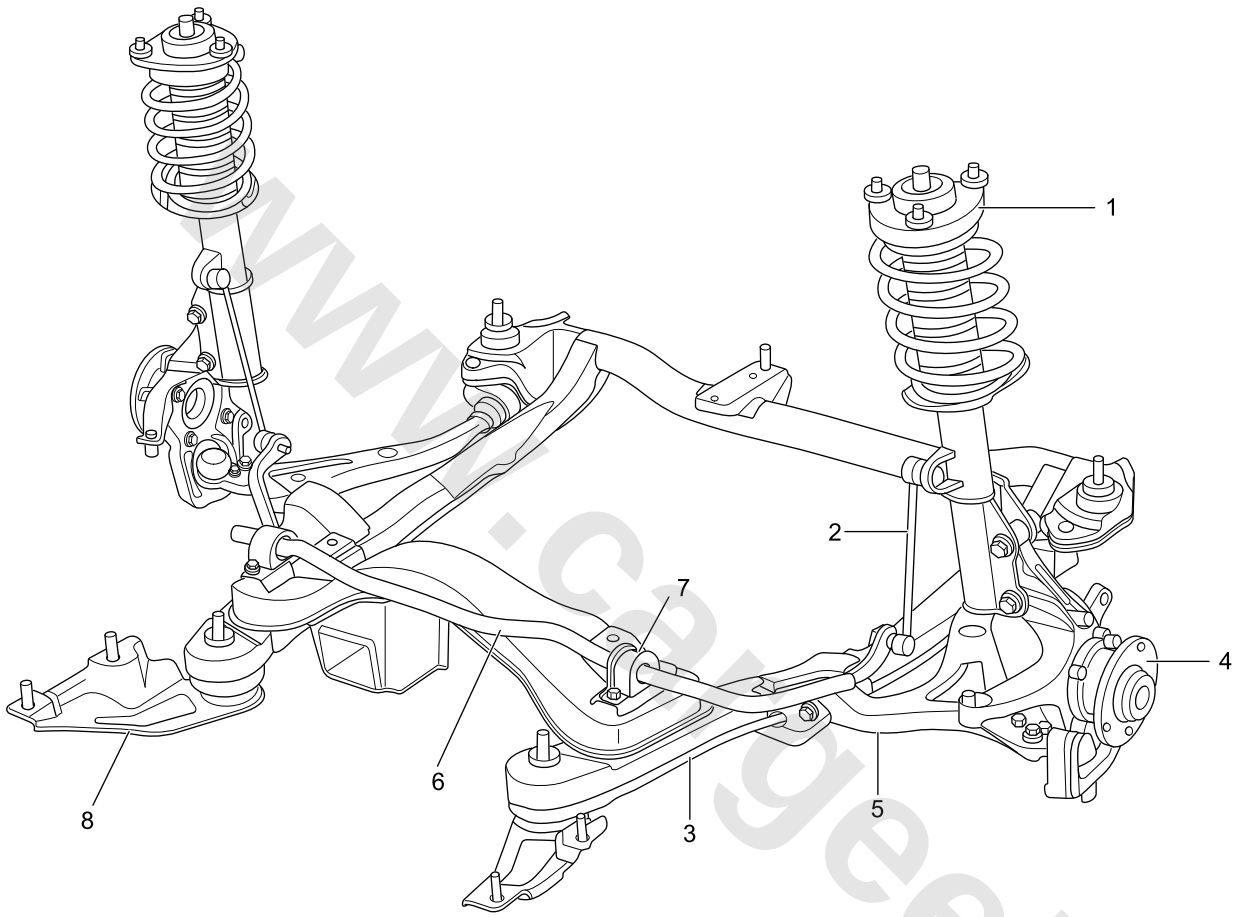

S2210004

1. Macpherson Front Shock Absorber Assembly (2)
2. Front Horizontal Stabilizer Bar Connecting Rod (2)
3. Front Subframe Assembly
4. Front Wheel Hub Assembly (2)
5. Front Lower Swing Arm Assembly (2)
6. Front Horizontal Stabilizer Bar
7. Front Horizontal Stabilizer Bar Bushing/Clamp (2)
8. Front Subframe Support Rod (2)

www.cargeek.ir

Front Suspension Exploded View

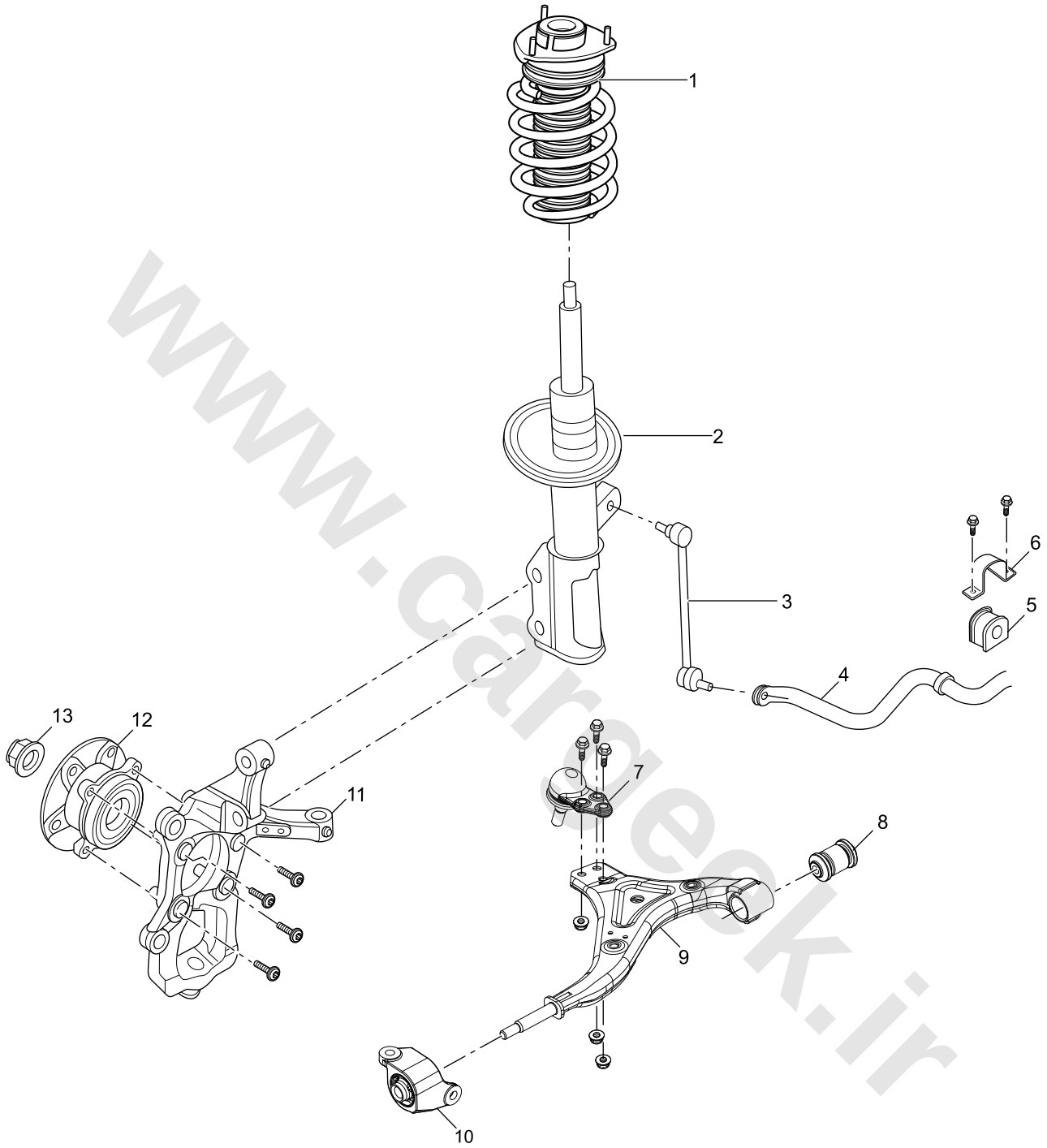

S2210005

1. Front Shock Absorber Coil Spring
2. Front Shock Absorber Strut
3. Front Horizontal Stabilizer Bar Connecting Rod
4. Front Horizontal Stabilizer Bar
5. Front Horizontal Stabilizer Bar Bushing
6. Front Stabilizer Bar Mounting Bracket
7. Front Lower Swing Arm Ball Head
8. Front Lower Swing Arm Rear Bush
9. Front Lower Swing Arm
10. Front Lower Swing Arm Bush and Bracket Assembly
11. Front Steering Knuckle
12. Front Wheel Hub Bearing Assembly
13. Front Drive Shaft Nut

www.cargeek.ir

www.cargeek.ir

Macpherson Front Shock Absorber Exploded View

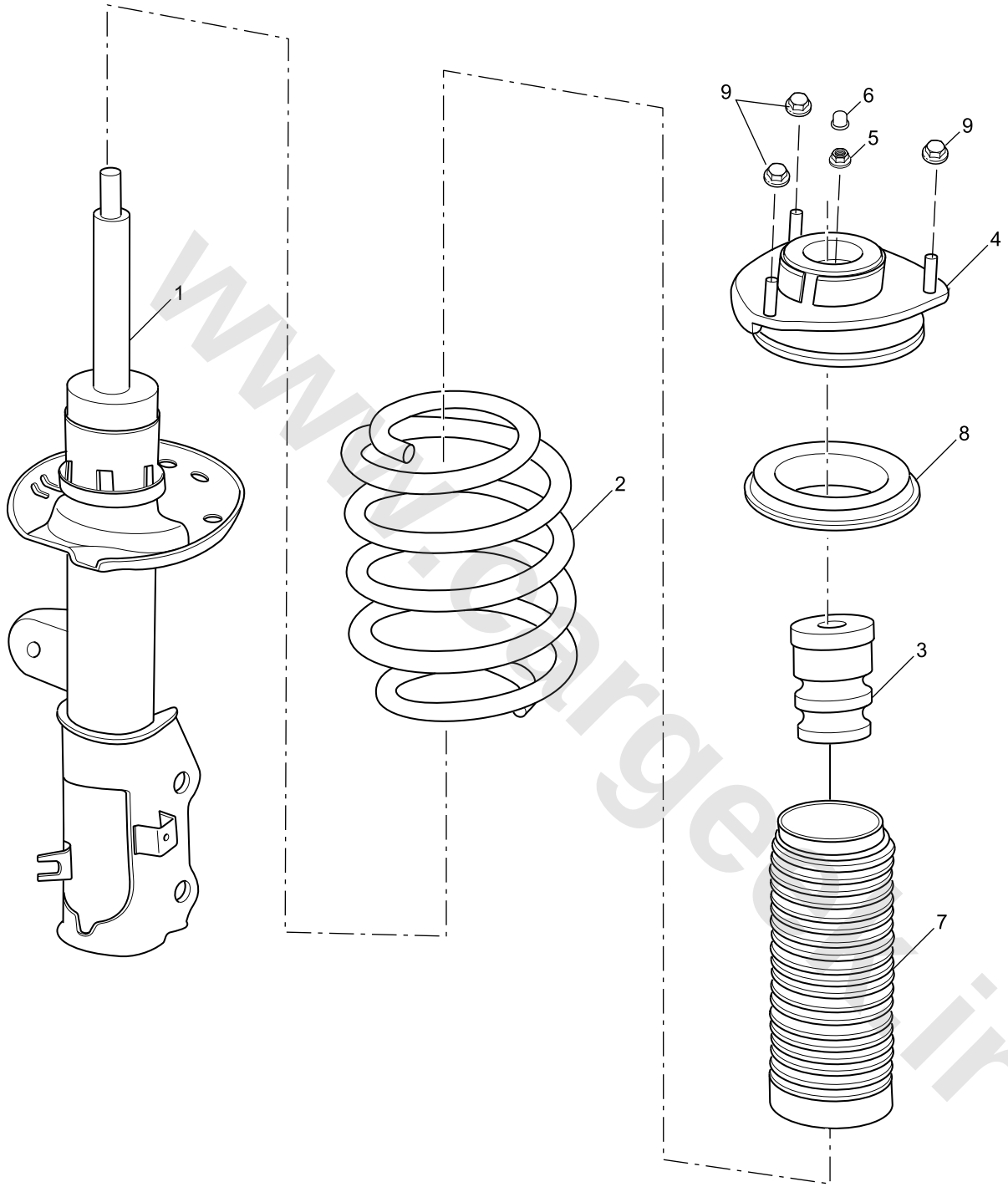

S2210006

1. Front Shock Absorber Strut
2. Front Spring
3. Front Bumper Block
4. Top Plate
5. Nut - Top of Front Shock Absorber
6. Anti-rust Cap
7. Front Dust Shield
8. Bearing

www.cargeek.ir

www.cargeek.ir

Description

Overview

Front suspension includes:

- 2 McPherson dampers
- 2 fork type front lower swing arms
- Front Horizontal Stabilizer Bar
- 2 Front Horizontal Stabilizer Bar Connecting Rods
- Front Subframe
- Front Wheel Hub, Hub Bearing Assembly

According to the damper transmission ratio (1:1), the design of the front suspension shall feature the anti-dive and anti-squat. The layout and design of the damper minimizes the wheel camber loss as a result of lateral force and improves the handling performance and steering response capability.

Front Subframe

The front subframe is stamped and welded with the high-strength steel, which features light weight and high structural strength. The geometric dimension of all key positions is accurately controlled during manufacture, this ensures proper location of the front suspension and steering components. The front subframe is assembled on the vehicle body through 4 supporting points, the front subframe provides mounting locations for all components of the front suspension except top damper, engine and transmission.

The rear supporting plate of the front subframe between the rear supporting point of the front subframe and the body can increase the rigidity of the front subframe. The arrangement of the supporting points can prevent the front subframe from moving under lateral force, this will cause unnecessary steering.

McPherson Dampers

The 2 McPherson dampers control the damping effect of the front suspension. Each damper includes a vibration absorption unit, a coil spring and an upper mounting support assembly. The coil spring is between the damper spring seat and upper mounting support assembly, which remains in the compressed state. Vibration isolator at both ends of the spring reduces noises delivered to the vehicle body from the front suspension. Under the upper mounting support assembly is installed a bearing, when the steering system work, the bearing allows coil spring rotation. A dust shield is fitted between the limiting buffer block of the compression stroke and the damper, which protects the damper strut from contamination or damage. The coil spring shaft deviates from the damper shaft, during turning, this arrangement can provide lateral load compensation and enhance the damping effect.

Front Shock Absorber

The front shock absorber is maintainable, which has a compression stroke of 100mm and a rebound stoke of 70mm. The front shock absorber is a dual barrel type structure, can be inflated and fuelled. This type of structure allows the movement of shock absorber piston inside the inner cylinder. There is an oil drain hole on the inner cylinder between the inner and outer cylinder. This structure minimizes the cavitation and eliminates the influence of the piston motion due to the damaged outer cylinder. The lower part of front shock absorber is attached to the front wheel hub, and secured with locking bolts. The base of front shock absorber is fixed on the front wheel hub, to ensure the correct orientation of front shock absorber. The front shock absorber strut is integrated with the upper mounting support by nuts. There is a hexagonal slot at the front shock absorber strut, when fastening the nut of the front shock absorber strut, the hexagonal slot can prevent rotation of the front shock absorber strut. The spring seat at a certain angle is combined with the shock absorber body, which is also used as the connection point of the front horizontal stabilizer bar link. There are 2 welding brackets near the bottom of the shock absorber cylinder, where are used for fitting the front brake hose and ABS sensor harness respectively.

Coil Spring

The coil spring is made of silicon, chromium, alum alloy materials, which is connected with the shock absorber strut. The top of the coil spring is under the bearing seat, and the bearing is in the upper mounting support. The lower coil spring is directly fitted on the spring support which combines with the shock absorber body. The front coil spring may vary depending on the engine model used in the vehicle and vehicle configuration. Different front coil spring can be identified by the color code applied to the coil.

Upper Mounting Support Assembly

The upper mounting support is composed of the support frame, vulcanized rubber, upper/lower gasket and 3 bolts. Vulcanize rubber on the steel frame, and press a gasket into the upper/lower sides respectively. Press the top bearing into the base under the upper mounting support. The mounting bearing is in clearance fit with the base. If necessary, replace the bearing. The upper mounting support is an integrated component, so it cannot be replaced as an individual part, the upper mounting support assembly shall also be replaced.

Front Lower Swing Arm

The front lower swing arm is a fork type arm. The swing arm is made of two stamped and welded steel plates, which connects the front steering knuckle and the front subframe. The front lower swing arm is fitted with a ball pin which contains a rotatable pin. The pin is between the front steering knuckle

www.cargeek.ir

www.cargeek.ir

and the swing arm, which is fixed by two bolts and lock nuts to the steering knuckle. When the wheel turns and bounces, the steering knuckle drives the pin to rotate around the center of the ball. During driving, the ball pin can transfer force to the vehicle through the swing arm. The front lower swing arm and subframe are connected by the front/rear bushes. Two pairs of bolts/nuts fit the front bush to the front subframe through the bush bracket. The rear bush is fitted into the subframe bracket by a pair of bolt/nut. The force from the vehicle wheel is transferred to the swing arm by the ball pin before the front/rear bushes transfer it to the subframe. In addition to transferring force, the flexibility of the bush also allows the swing arm to sway up and down, it can absorb the vibration from the ground and its rigidity can provide a good stability. The axis of the front and rear bushes is in the same straight line. The swing arm rotates around the axis of the front and rear bushes, which guides the motion track of the vehicle wheel and helps the wheel to move in accordance with the scheduled track. The ball pin and front/rear bushes of the swing arm are replaceable.

Caution: Do not jack the vehicle under the front or rear lower arm as damage or misalignment may occur.

Front Horizontal Stabilizer Bar and Connecting Rod

The steel front horizontal stabilizer bar of solid spring passes through the connecting rod of the stabilizer bar transversely and connects the shock absorber strut bracket. The diameter of the front horizontal stabilizer bar is 23mm. The front horizontal stabilizer bar is connected to the rear of front subframe by using two polytetrafluoroethene (PTFE) sleeves, and the PTFE sleeves are secured with bolts and front horizontal stabilizer bar anchorage brackets. The PTFE sleeve has a low friction, and does not need extra lubrication, which allows the static front horizontal stabilizer bar to rotate freely and give rapid response to the overturn input. The washer outside each sleeve on the front horizontal stabilizer bar can prevent the lateral movement of the front horizontal stabilizer bar. The two ends of the front horizontal stabilizer bar is connected to the cylinder of the front shock absorber by its connecting rod. This arrangement allows the front horizontal stabilizer bar to act in an approximate ratio of 1:1 with the wheel travel and provides the maximum lateral stability performance. For each front horizontal stabilizer bar, the end of the connecting rod is fitted with a ball joint which can increase the response speed and efficiency. The upper ball joint and the axis line of the connecting rod are at an angle of 90°, which is fitted on the connecting rod and connected directly by lock nuts with the welded bracket on the front shock absorber cylinder. The lower ball joint and the axis line of the connecting rod are at an angle of 90°, which is fitted on the connecting rod and connected with the front horizontal stabilizer bar by lock nuts. The connecting rod must be connected to the rear ball joint of the front horizontal stabilizer bar, and the locking surface of lock nut shall face the inside of the vehicle. The ball joint on the connecting rod of the front horizontal stabilizer bar is not repairable, if any one of the ball joints should be replaced, the connecting rod assembly of the front horizontal stabilizer bar shall be renewed.

www.cargeek.ir

Service Procedures

Front Lower Swing Arm Assembly

Remove

1. Raise the vehicle on a lift.
2. Remove the corresponding front wheel.

☞ **Wheel Remove**

3. For vehicles with DHL, remove 2 bolts fixing the DHL front suspension height sensor to the front lower swing arm.
4. Remove and discard the nut (3) fixing the outer ball joint of the front lower swing arm to the front wheel hub.
5. Loosen the outer ball joint of the front lower swing arm from the front wheel hub.

Warning: Do not jack the vehicle under the front or rear lower arm as damage or misalignment may occur.

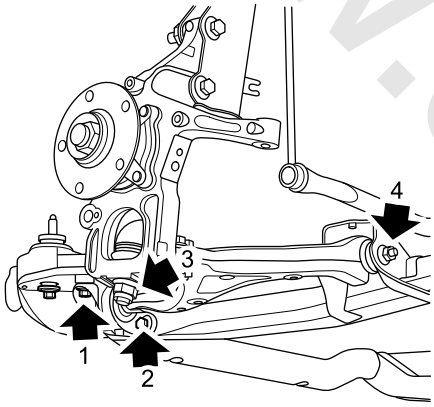

S2213121

6. Remove and discard the bolt and nut (1), (2) fixing the front bush of the front lower swing arm to the front subframe.
7. Remove the outer ball joint from the front wheel hub.
8. Remove and discard the bolt (4) fixing rear bush bracket assembly of the front lower swing arm to the subframe.
9. Remove the front lower swing arm assembly.

Refit

1. Locate the front lower swing arm to the subframe, fit the bolt, but do not tighten it at this step.
2. Tighten 2 bolts securing the bracket assembly of the front lower swing arm bush to **120±10Nm**.
3. Fit the rear bush nut of the front lower swing arm and tighten to **90Nm + 120°**.
4. Connect the outer ball joint of the front lower swing arm to the front wheel hub. Fit the bolt and tighten the front wheel hub to **95±10Nm**.

Caution: Nuts and bolts must be tightened with weight of vehicle on suspension.

5. For vehicles with DHL, fix the DHL front suspension height sensor to the front lower swing arm, fit 2 bolts and tighten to **7–10Nm**.
6. Fit the wheels.

☞ **Wheel Refit**

7. Check and adjust the parameters for wheel alignment.

☞ **Four-wheel Alignment**

8. For vehicles with DHL, perform a self-learning for the null voltage of the DHL height sensor.

☞ **Self-learning and Adjustment, Programming and Coding - Height Sensor Null Voltage Self-learning**

www.cargeek.ir

Front Lower Swing Arm Outer Ball Joint

Remove

Caution: This ball joint boot kit should only be used if the boot is damaged during a service. It must not be used if the vehicle has been driven with a damaged boot.

1. Remove the front lower swing arm assembly.

☞ **Front Lower Swing Arm Assembly Remove**

2. Remove and discard 3 bolts and nuts (1) fixing the front lower swing arm outer ball joint sheath to the front lower swing arm outer ball joint.

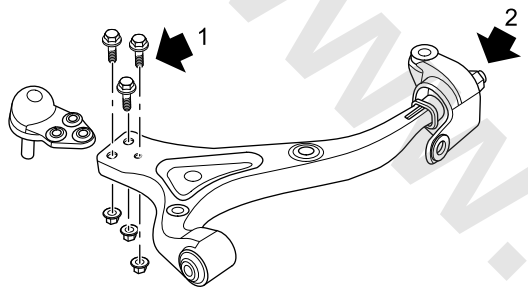

S2213120

Refit

1. Connect the new outer ball joint of the front lower swing arm to the the front lower swing arm with 3 bolts.
2. Fit the nut and tighten to **90–110Nm**.
3. Fit the front lower swing arm assembly.

☞ **Front Lower Swing Arm Assembly Refit**

Front Lower Swing Arm Rear Bush

Remove

1. Remove the front lower swing arm assembly.

☞ **Front Lower Swing Arm Assembly Remove**

2. With the pressing device and **TCH00098**, press the rear bush of the front lower swing arm out of the front lower swing arm assembly.

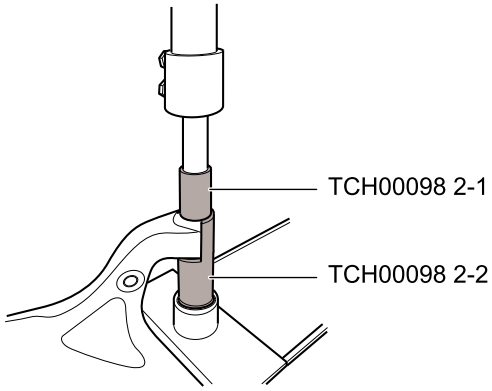

S2213124

Refit

1. Clean the junction of the front lower swing arm, front lower swing arm bush and bracket assembly.
2. Clean the junction of the front lower swing arm and the rear bush of the front lower swing arm.
3. With the pressing device and **TCH00098**, press the rear bush of the front lower swing arm into the front lower swing arm assembly.

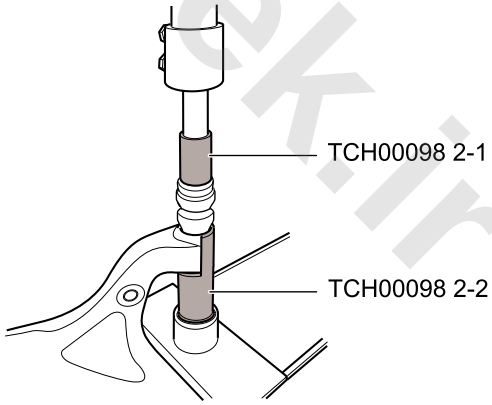

S2213125

4. Fit the front lower swing arm assembly.

☞ **Front Lower Swing Arm Assembly Refit**

www.cargeek.ir

Front Shock Absorber Assembly

Remove

1. Raise the vehicle on a lift.
2. Remove wheels on both sides.

☞ **Wheel Remove**

3. Release the ABS harness and brake hose from the front shock absorber. Release the harness and brake hose (1), (2) from the clip.

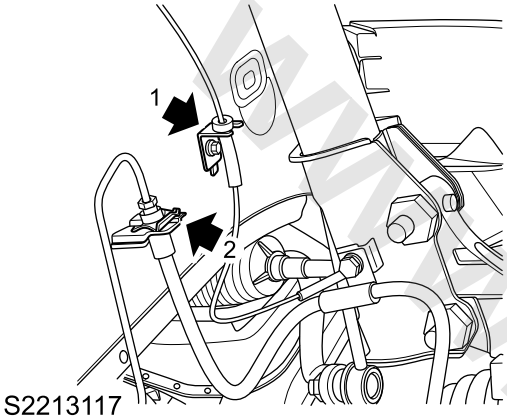

S2213117

4. Remove the nut fastening the steering tie rod to wheel bracket. Fit a M10 nut to the ball pin and align it with the ball pin.
5. Release the steering tie rod ball joint from the steering arm with the **T38008**. Remove the M10 nut (2) from the ball pin.

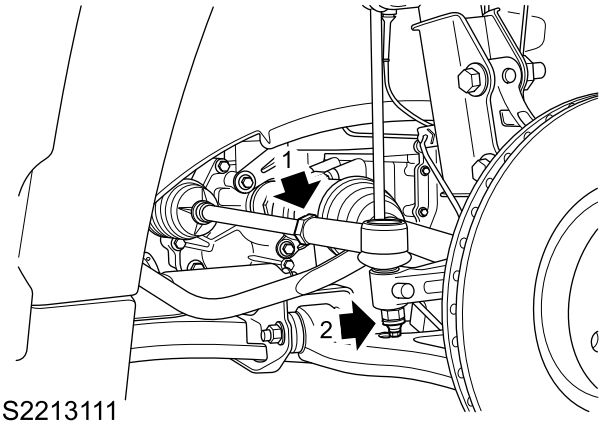

S2213111

6. Release the nut (1) fixing the front horizontal stabilizer bar to the front shock absorber.

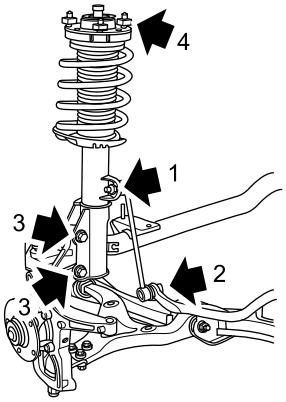

S2213114

7. Remove and discard the bolts (3) fixing the front shock absorber assembly to the front wheel hub.
8. Remove the front shock absorber from the front wheel hub.
9. Remove the A/C intake grille on the top.

☞ **A/C Air Intake Grille Remove**

10. Remove and discard 3 nuts (4) securing the front shock absorber on the body.
11. Remove the front shock absorber assembly and spring.
12. Remove the anti-rust cap at the top of the front shock absorber.
13. Fix spring compressor **T32016** and **T32017** to the front shock absorber spring.

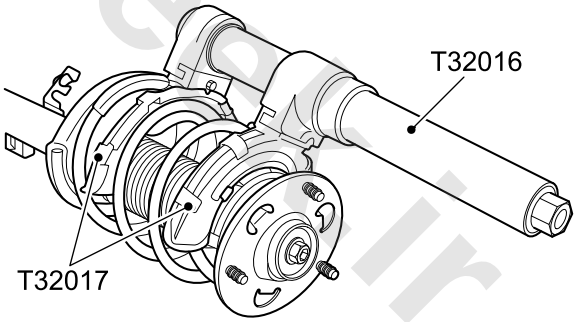

S323021

14. Ensure the adapter of the spring compressor is properly fitted, and compress the spring.
15. Lock the top of the front shock absorber with an Allen wrench, remove and discard the top nut.
16. Remove the support assembly from the front shock absorber.
17. Remove the spring vibration isolator.
18. Remove the coil spring of the front shock absorber.
19. Remove the front bumper block and front dust shield of the front shock absorber.
20. Release the pressure of the coil spring, loosen the

www.cargeek.ir

adapter from the spring compressor and remove the coil spring.

Refit

1. Check the strut and bearing of the front shock absorber for any sign of crack and damage.
2. Check the dust shield and front bumper block of the front shock absorber for any sign of aging or damage.
3. Clean the strut and bumper block of the front shock absorber.
4. Fit the front bumper block and dust shield of the front shock absorber to the front shock absorber strut.
5. Fit the coil spring of the front shock absorber to the front shock absorber strut.
6. Locate the spring compressor to the front shock absorber, apply the **T32016** and **T32017** to compress the spring.
7. Ensure correct mounting position, fit the mounting support and spring vibration isolator of the front shock absorber to the front shock absorber shaft.
8. Fit the nut at the top of the front shock absorber.
9. Lock the front shock absorber strut with an Allen wrench and tighten the nuts to **65–75Nm**.
10. Release the elasticity of the spring, loosen the adapter of the spring compressor and take out the spring compressor.
11. Fit the anti-rust cap of the front shock absorber.
12. Clean the mating face of the front shock absorber, spring assembly and vehicle body.
13. Locate the front shock absorber and spring assembly to the vehicle body, fit new nut and tighten to **50–65Nm**.
14. Fit the front shock absorber assembly into the front wheel hub, fit new bolt and nut, and tighten to **90–110Nm**.
15. Fit the front A/C intake grille.

Front A/C Intake Grille Refit

16. Clean the connecting rod of the front horizontal stabilizer bar and fit it into the front shock absorber assembly. With an open-end wrench, clamp the connecting rod of the front horizontal stabilizer bar to lock the ball joint of the front horizontal stabilizer bar, fit the nut and tighten to **40–50Nm**.
17. Fit the front brake hose and front wheel ABS sensor harness to the bracket of the front shock absorber strut.
18. For the right: fix front brake pad wear sensor harness to the bracket of the front shock absorber strut.
19. Fit wheels.

Wheel Refit

20. Lower the vehicle.
21. Check the parameters for wheel alignment.

Four-wheel Alignment

22. For vehicles with DHL, perform a self-learning for the null voltage of the DHL height sensor.

Self-learning and Adjustment, Programming and Coding - Height Sensor Null Voltage Self-learning

www.cargeek.ir

Front Subframe Assembly

Remove

1. Remove the front wheels.

Front Wheel Remove

2. Raise the vehicle on a lift.
3. For vehicles with DHL, remove 2 bolts fixing the DHL front suspension height sensor to the front subframe.
4. For AWD vehicles, remove the intermediate drive shaft.

Intermediate Drive Shaft Remove

5. Remove the left/right drive shaft.

Left Drive Shaft Remove

Right Drive Shaft Remove

6. Remove the front exhaust pipe.

Front Exhaust Pipe Remove

7. Remove the front lower swing arm.

Front Lower Swing Arm Remove

8. Remove the bolt and nut (1) fixing the front lower tie rod to the transmission.

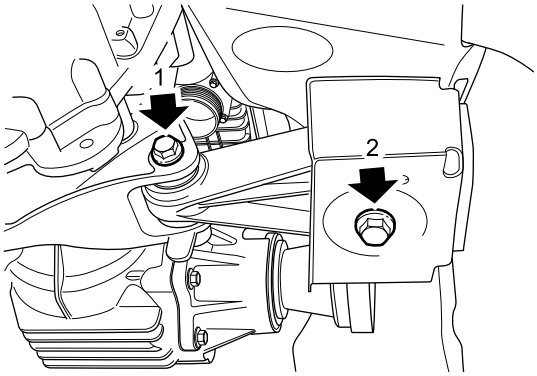

S2213112

9. Remove the bolt (2) fixing the lower tie rod to the front subframe, and remove the lower tie rod.
10. Remove 2 nuts fixing the steering gear and front wheel hub.
11. Remove 2 bolts (1) fixing the connecting rod of the horizontal stabilizer bar to the front shock absorber.

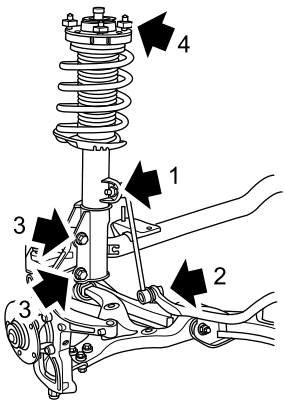

S2213114

12. Remove 2 bolts (2) fixing the left/right support rods of the front subframe to the vehicle body.

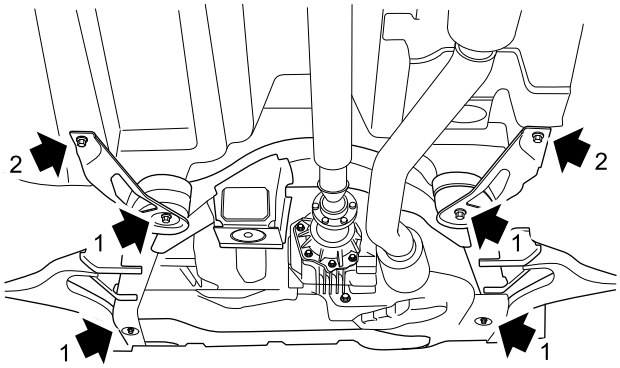

S2213113

13. Support the front subframe assembly with the hydraulic lifting equipment, remove 4 bolts (1) fixing the front subframe to the body and remove the subframe.
14. Remove 4 bolts fixing the horizontal stabilizer bar to the front subframe.
15. Remove two bolts fixing the steering gear to the subframe.

Refit

1. Fit the horizontal stabilizer bar bush to the horizontal stabilizer bar, tighten 4 bolts fixing the horizontal stabilizer bar bracket to the front subframe to **50–65Nm**.
2. Fit the bolt fixing the steering gear to the front subframe, and tighten to **100Nm+45°**.
3. Locate the front subframe assembly to the hydraulic lifting equipment.
4. Clean the mounting location on the front subframe assembly.
5. Locate the subframe to the body according to the mounting mark on the body.
6. Locate the subframe support rod to the front subframe, fit 4 new bolts to the subframe.
7. Evenly tighten 4 mounting bolt of the front subframe, align the washer with the subframe bushing and tighten the bolt to **90Nm + 180°**.
8. Tighten the bolt securing the front subframe support rod on the front subframe to **80±10Nm**.
9. Tighten the bolt fixing the lower engine tie rod to the engine bracket.
10. Tighten the nut fixing the steering gear and front wheel hub to **40–50Nm**.
11. Tighten the nut fixing the connecting rod of the horizontal stabilizer bar to the front shock absorber assembly to **40–50Nm**.

www.cargeek.ir

12. Fit the front lower swing arm assembly.

☞**Front Lower Swing Arm Assembly Refit**

13. Fit the front exhaust pipe.

☞**Front Exhaust Pipe Refit**

14. For AWD vehicles, fit the intermediate drive shaft.

☞**Drive Shaft Refit**

15. Fit the left/right drive shafts.

☞**Left Drive Shaft Refit**

☞**Right Drive Shaft Refit**

16. For vehicles with DHL, fix the DHL front suspension height sensor to the front subframe, fit 2 bolts and tighten to **7–10Nm**.
17. Fit the front wheel.

☞**Wheel Refit**

18. Connect the battery negative cable.
19. Check the parameters for four-wheel alignment.

☞**Four-wheel Alignment**

20. For vehicles with DHL, perform a self-learning for the null voltage of the DHL height sensor.

☞**Self-learning and Adjustment, Programming and Coding - Height Sensor Null Voltage Self-learning**

Front Subframe Support Rod

Remove

1. Raise the vehicle on a lift.
2. Remove the screw (2) fixing the subframe support rod to the body.

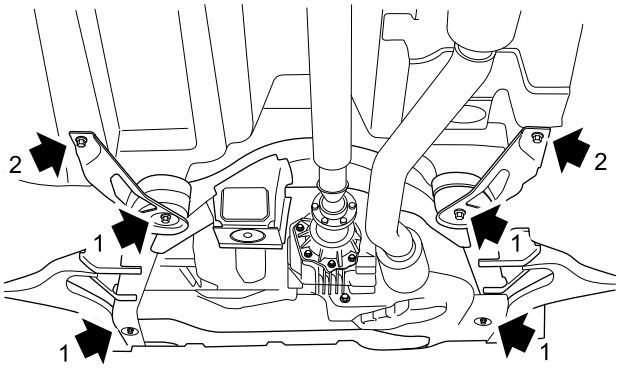

S2213113

3. Take away the bolt (1) fixing the subframe support rod to the subframe, and remove the subframe support rod.

Refit

1. Locate the subframe support rod to the subframe, fit the bolt and tighten to **80±10Nm**.
2. Locate the subframe support rod to the body, fit the bolt and tighten to **90Nm + 180°**.
3. Lower the vehicle.

www.cargeek.ir

www.cargeek.ir

Front Horizontal Stabilizer Bar

Remove

1. Remove two front wheels.

Wheel Remove

2. Raise the vehicle on a lift.
3. Remove and discard the nut (2) fixing the front horizontal stabilizer bar to the connecting rod of the front horizontal stabilizer bar.
4. Fix the wheel hub aside, so that there is enough space for removing the horizontal stabilizer bar.

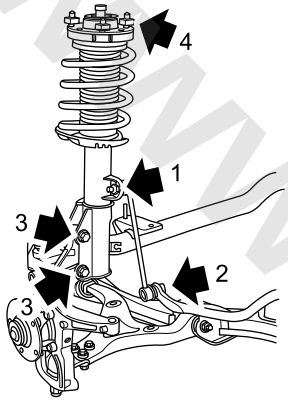

S2213114

5. Remove and discard 4 bolts (1), (2) securing the front horizontal stabilizer bar on the front subframe.

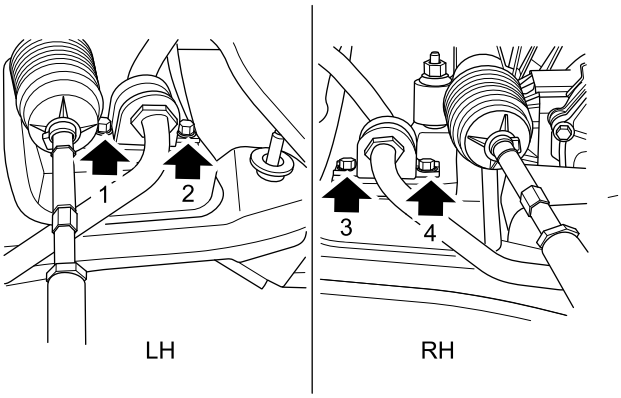

S2213115

6. Remove the front horizontal stabilizer bar.

Refit

1. Locate the front horizontal stabilizer bar to the subframe and adjust it.
2. Fit the front horizontal stabilizer bar bush and locate it to the support.

Caution: Anti roll bar bushes have a special coating and must not be lubricated.

3. Fit the bush bracket of the front horizontal stabilizer bar. Fit new bolt to the bush bracket and tighten to **50–65Nm** in sequence.
4. Align the connecting rod of the front horizontal stabilizer bar, fit new nut securing the connecting rod of the front horizontal stabilizer bar on the the front horizontal stabilizer bar, and tighten to **50–65Nm**.

Caution: Nuts and bolts must be tightened with weight of vehicle on suspension.

www.cargeek.ir

www.cargeek.ir

Front Horizontal Stabilizer Bar Bushing

Remove

1. Remove front wheels.

Wheel Remove

2. Raise the vehicle on a lift.
3. Remove and discard 4 bolts fixing the bracket and bushing of the front horizontal stabilizer bar to the front subframe.
4. Remove the bracket and bushing of the front horizontal stabilizer bar.

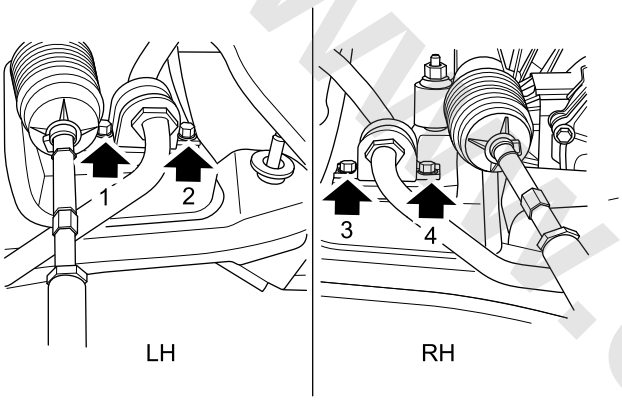

S2213115

Refit

1. Fit the bush to the front horizontal stabilizer bar and locate it to the support.

Caution: Anti roll bar bushes have a special coating and must not be lubricated.

2. Fit the bush bracket.
3. Fit new bolt to the bush bracket and tighten each bolt to **50–65Nm** in sequence.
4. Check whether the tightening force of each bolt is correct.

Caution: Failure to carry out this procedure can result in bolts being incorrectly tightened.

5. Lower the vehicle.

Front Horizontal Stabilizer Bar Connecting Rod

Remove

1. Raise the vehicle on a lift.
2. Remove front wheels.

Wheel Remove

3. Remove and discard the nut (2) fixing the connecting rod of the front horizontal stabilizer bar to the front horizontal stabilizer bar.

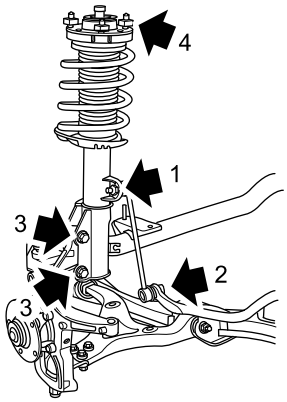

S2213114

4. Disconnect the connecting rod of the front horizontal stabilizer bar from the front horizontal stabilizer bar.
5. Remove the nut (1) fixing the connecting rod of the front horizontal stabilizer bar to the front shock absorber.

Caution: To prevent damage to components, use two spanners when loosening or tightening unions.

6. Remove the connecting rod of the front horizontal stabilizer bar from the front shock absorber.

Refit

1. Fit the connecting rod of the front horizontal stabilizer bar to the front shock absorber, and tighten the nut to **40–50Nm**.

Caution: To prevent damage to components, use two spanners when loosening or tightening unions.

2. Connect the connecting rod of the front horizontal stabilizer bar to the front horizontal stabilizer bar, fit new nuts and tighten to **50–65Nm**.

Caution: To prevent damage to components, use two spanners when loosening or tightening unions.

3. Fit the two front wheels.

Wheel Refit

4. Lower the vehicle.

www.cargeek.ir

Front Wheel Hub Assembly

Remove

1. Raise the vehicle on a lift.
2. Remove front wheels.

Front Wheel Remove

3. Remove the front left/right drive shafts.

Left Drive Shaft Remove

Right Drive Shaft Remove

4. Release the harness of the ABS vehicle speed sensor from the bracket. Remove the clip from the bracket and release the brake hose.
5. Remove 2 bolts (1), (2) fixing the brake caliper to the front wheel hub. Release the brake caliper from the front wheel hub and fix it aside.

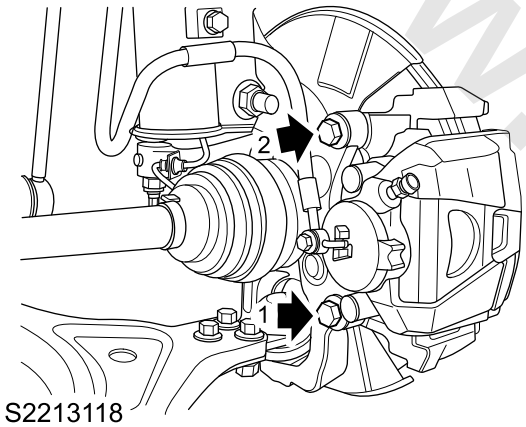

S2213118

Caution: Don't tie brake caliper on brake hose.

6. Remove the countersunk screws securing the front brake disc and the front wheel drive flange.

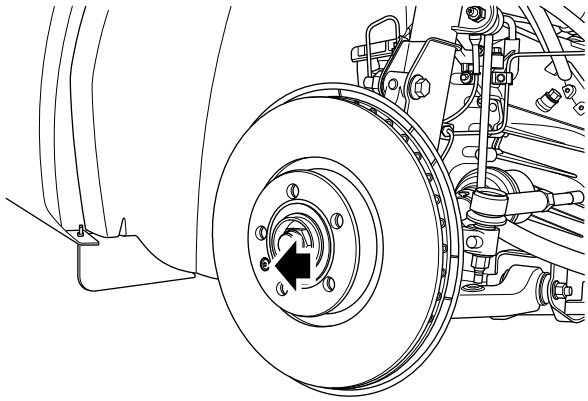

S2413024

7. Remove the front brake disc.
8. Remove and discard the nuts fastening the steering tie rod to the steering arm.
9. Fit a M10 nut to the ball pin and align it with the ball pin.

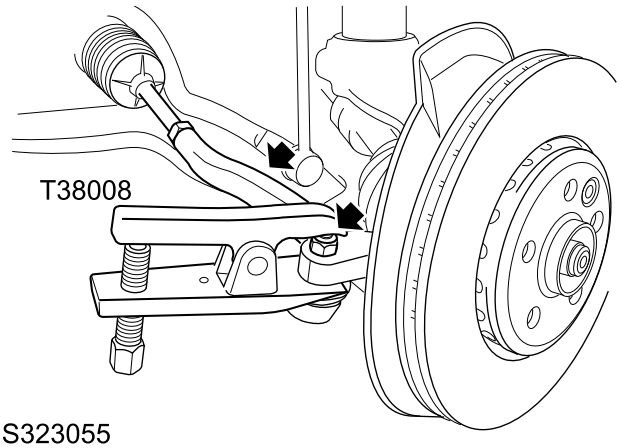

S323055

10. Release the steering tie rod ball joint from the steering arm with the **T38008**.
11. Remove the M10 nut from the ball pin.
12. Remove the screw securing the ABS vehicle speed sensor, release the sensor and put it aside.
13. Remove nuts and bolts fixing the outer ball joint of the front lower swing arm to the front wheel hub and discard the bolt and nut.
14. Remove and discard the bolt fixing the front shock absorber assembly to the front wheel hub.
15. Remove the outer ball joint of the front lower swing arm.
16. Remove the front wheel hub from the front shock absorber.
17. Remove and discard 4 bolts fixing the wheel hub bearing assembly to the front steering knuckle. Remove the wheel hub bearing assembly.

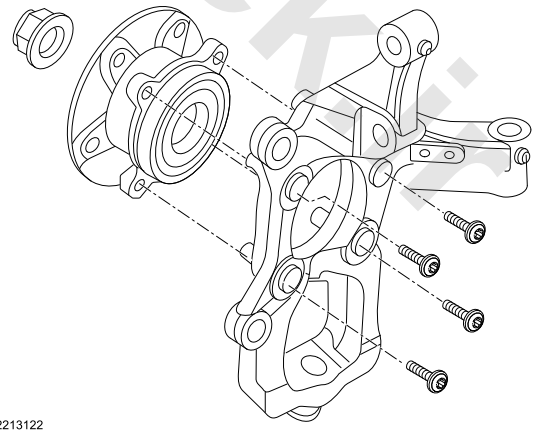

S2213122

Tip: Do not remove protective cover from bearing until hub is about to be fitted.

Tip: Do not store hub bearings near magnetic fields or iron filings as damage may occur.

Refit

1. Clean the junction between the front wheel hub bearing assembly and the front steering knuckle.
2. Clean the junction between the front steering knuckle

www.cargeek.ir

and the front shock absorber.

3. Clean the junction between the front steering knuckle and the ball joint of the front lower swing arm.
4. Fit new bolt securing the wheel hub bearing assembly and front steering knuckle, and tighten to **70Nm + 90°**.
5. Connect the front steering knuckle and front shock absorber assembly with bolts.
6. Check the ball joint sheath of the front lower swing arm for any damage and connect the front wheel hub to the front lower swing arm assembly.
7. Use new nut to fix the front shock absorber assembly to the front wheel hub, and tighten to **140–170Nm**.
8. Use new nut to fix the front lower swing arm assembly to the front wheel hub, and tighten to **95±10Nm**.
9. Clean the junction between the steering tie rod and the steering arm.
10. Connect the steering tie rod to the steering arm, fit new lock nuts and tighten to **40–50Nm**.
11. Clean the mating face of the front wheel ABS vehicle speed sensor and front wheel hub.
12. Lubricate the junction between the front wheel ABS sensor and the front wheel hub with appropriate grease.

☞**Capacity**

13. Fit the front wheel ABS sensor to front wheel hub and tighten it to **7–10Nm** with screws.
14. Fit front brake disc to front drive flange, fit countersunk head screws and tighten them to **7–10Nm**.
15. Loosen the front brake caliper assembly and locate it to the front brake disc. Fit the bolts fixing the front brake caliper to the front wheel hub and tighten the bolts to **190–210Nm**.
16. Fix the front brake hose to the bridging bracket of the front shock absorber and fix it with pipe clips.
17. Fix the front wheel ABS sensor harness to the front shock absorber strut. Fix the front brake hose and front wheel ABS sensor harness to the pipe clip.
18. Fit the left/right drive shafts.

☞**Left Drive Shaft Refit**

☞**Right Drive Shaft Refit**

19. Fit wheels.

☞**Wheel Refit**

20. Lower the vehicle.
21. Check the parameters for wheel alignment.

☞**Four Wheel Alignment Check**

www.cargeek.ir

Special Tools

Tool Number	Description	Picture
TCH00098	Remove and replacer front lower arm small bus	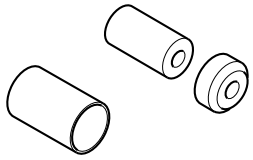 TCH00098
T38008	Remover ball joint	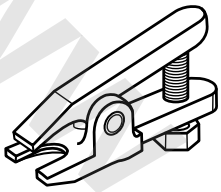 T38008
T32016	Coil spring compressor	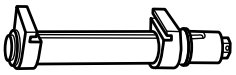 T32016
T32017	Adaptor coil spring compressor	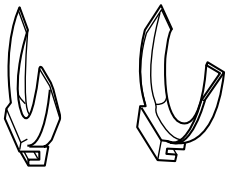 T32017

www.cargeek.ir

www.cargeek.ir

Rear Suspension

Specifications

Torque

Description	Value
Bolts- rear upper arm assembly to rear subframe	100±10Nm
Nut- rear upper arm assembly to rear wheel carrier	50Nm+90°
Nut- rear lower arm assembly to rear subframe	100±10Nm
Nut- rear lower arm assembly to rear wheel carrier	155±15Nm
Bolts- rear damper to body	50–65Nm
Bolts- rear damper to rear wheel carrier	75–90Nm
Bolt-wheel to hub	120–130Nm
Nut- lateral rod assembly to rear subframe	100±10Nm
Nuts- rear anti-roll bar links to anti-roll bar	45–55Nm
Nut- rear anti-roll bar links to rear lower arm assembly	7–11mm
Bolts- rear anti-roll bar to rear subframe	50–65Nm
Bolts- rear wheel carrier	180Nm + 180°
Bolts- rear bearing to rear wheel carrier	70Nm + 90°
Nut-front drive shaft	350–370Nm
Screw-Rear brake pan to bearing	7-10Nm
Bolt-Rear brake caliper assembly to rear knuckle	55 Nm+30°
Bolts- rear subframe to body	90Nm+90°
Nut- lateral rod assembly to rear wheel carrier	130Nm+90°
Bolts- rear blade arm assembly to rear wheel carrier	60±5Nm
Bolts- rear blade arm assembly yo rear body	100±10Nm
Bolt - ASM-FR sensor to bodywork	7–10Nm
螺母 Nuts- rear trailing arm bush to rear trailing arm	155±10Nm

www.cargeek.ir

www.cargeek.ir

Parameters

Model	The coil spring, inflatable pillar shock absorber and four connecting rods are at the rear subframe.
Rear Upper Swing Arm	High Strength Steel
Diameter of Rear Horizontal Stabilizer Bar	19mm
Rear Coil Spring Data: Total Coils The diameter of wire	 8.3 13.6mm
Free Length:	339mm

www.cargeek.ir

www.cargeek.ir

Description and Operation

System Layout

Rear Suspension Layout

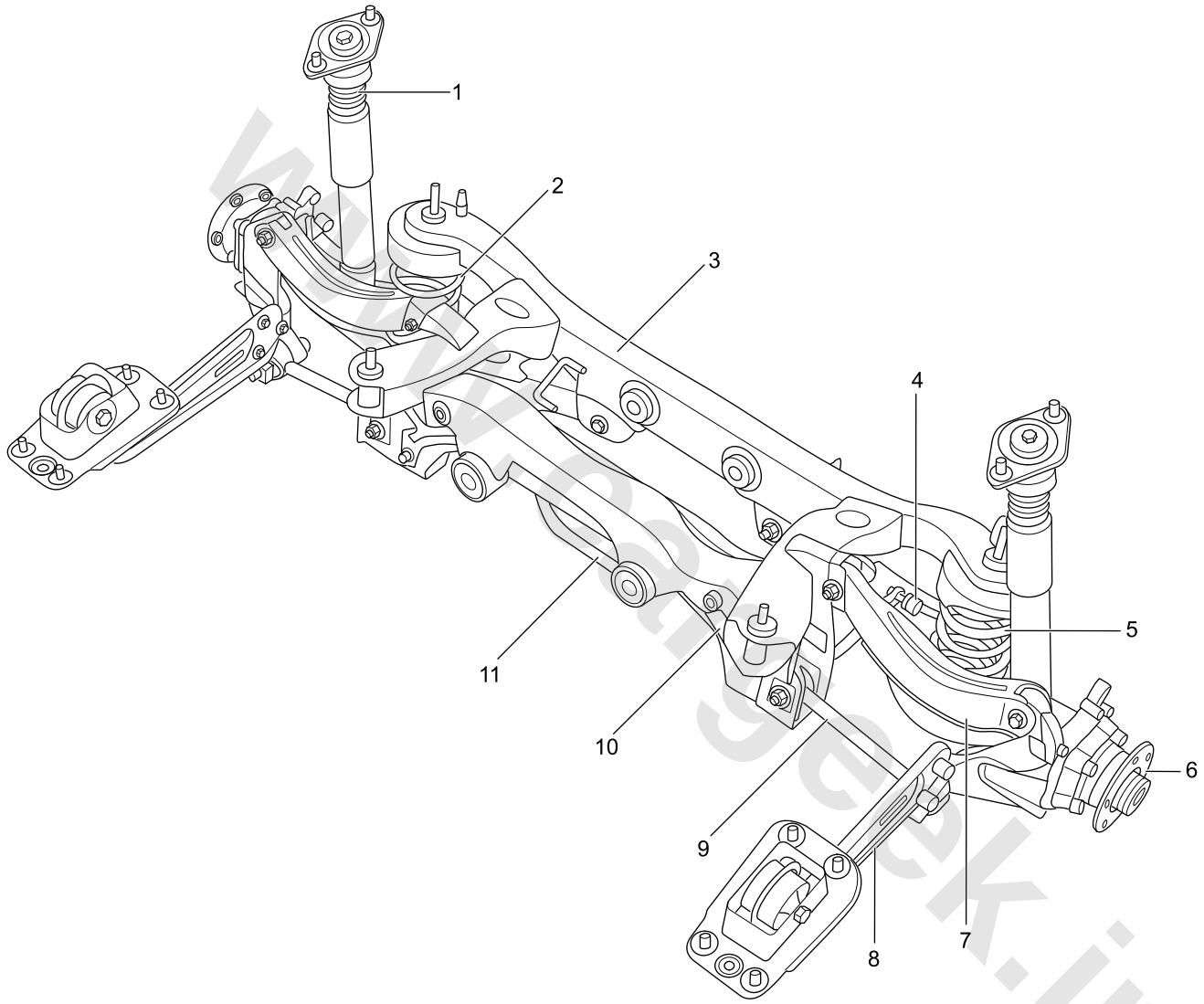

S2220003

1. Rear Shock Absorber Assembly (2)
2. Rear Lower Swing Arm Assembly (2)
3. Rear Subframe Assembly
4. Rear Horizontal Stabilizer Bar Connecting Rod (2)
5. Rear Suspension Coil Spring Assembly (2)
6. Rear Wheel Hub Assembly (2)
7. Rear Upper Swing Arm Assembly (2)
8. Rear Trailing Arm Assembly (2)
9. Rear Lateral Push Rod Assembly (2)
10. Rear Horizontal Stabilizer Bar Assembly

www.cargeek.ir

www.cargeek.ir

Rear Suspension Exploded View

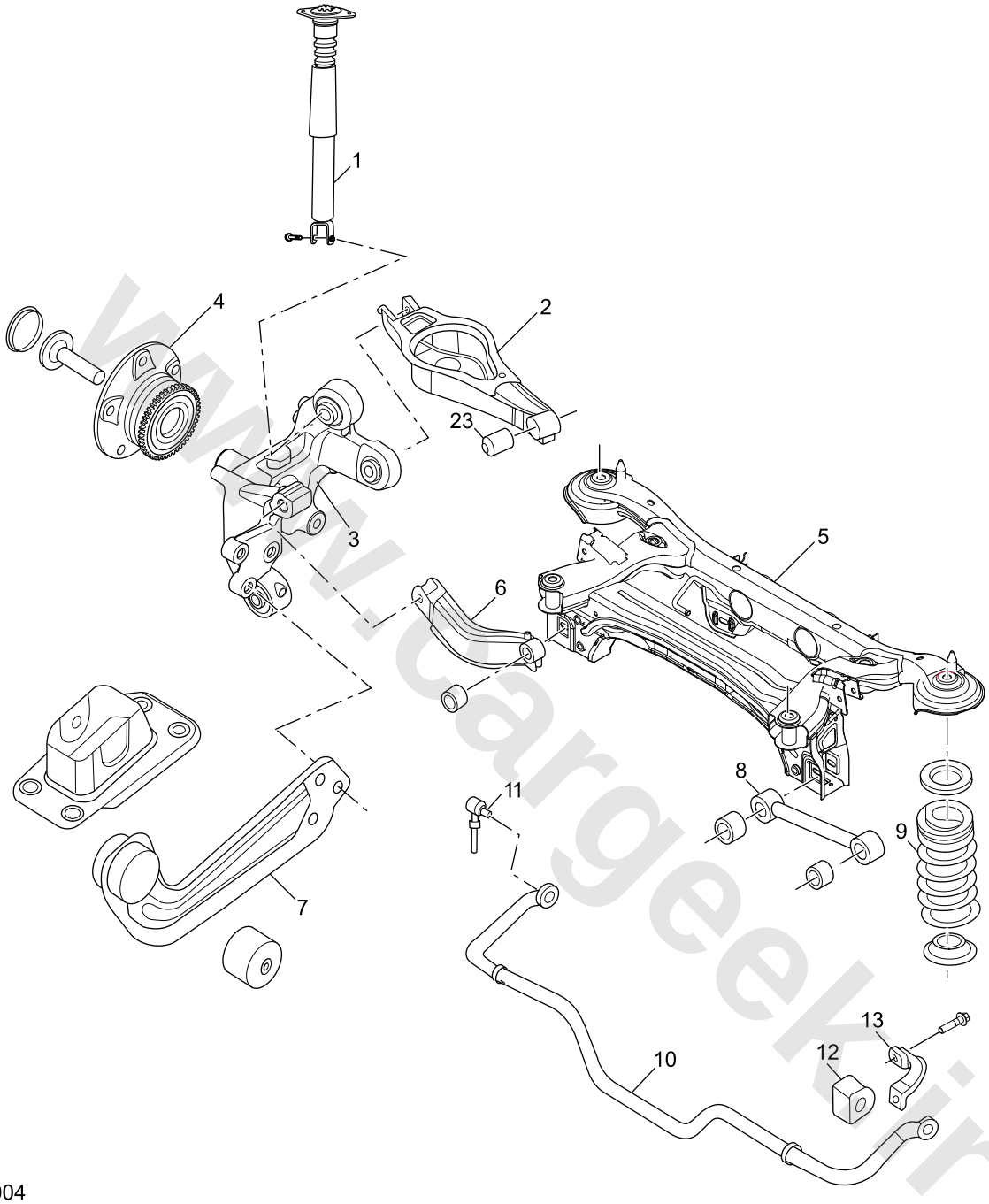

1. Rear Shock Absorber Assembly (2)
2. Rear Lower Swing Arm Assembly (2)
3. Rear Wheel Bracket (2)
4. Rear Wheel Hub Bearing Assembly (2)
5. Rear Subframe Assembly (2)
6. Rear Lower Swing Arm Assembly (2)
7. Rear Trailing Arm Assembly (2)
8. Rear Lateral Push Rod Assembly (2)
9. Rear Coil Spring Assembly (2)
10. Rear Horizontal Stabilizer Bar Assembly (2)
11. Rear Horizontal Stabilizer Bar Connecting Rod (2)
12. Rear Horizontal Stabilizer Bar Bushing (2)
13. Rear Horizontal Stabilizer Bar Mounting Bracket (2)
14. Rear Horizontal Stabilizer Bar Bushing and Bracket

www.cargeek.ir

Rear Shock Absorber Assembly Exploded View

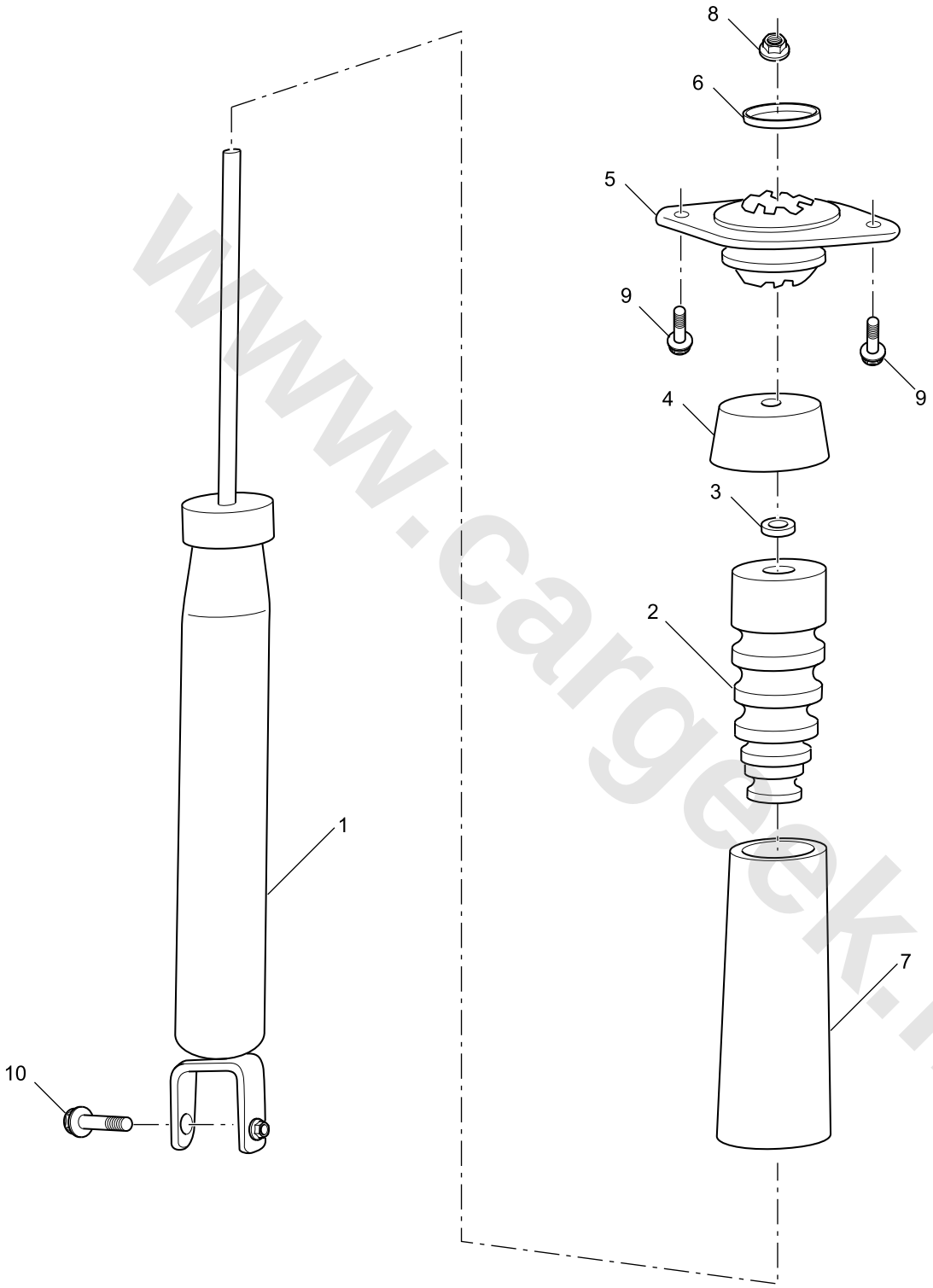

S2220005

1. Rear Shock Absorber Strut
2. Rear Bumper Block
3. Cushion - Piston Rod Step
4. Cover - Bumper Block
5. Rear Top Plate
6. Upper Gasket
7. Rear Dust Shield
8. Nut

www.cargeek.ir

Description

Overview

Rear suspension includes:

- 2 Shock Absorbers
- 2 Coil Springs
- 2 Upper Swing Arms
- 2 Lower Swing Arms
- 2 Trailing Arms
- 2 Rear Lateral Push Rods
- Rear Horizontal Stabilizer Bar (if fitted)
- 2 Connecting Rods of Rear Horizontal Stabilizer Bar (if fitted)
- Rear Subframe

The trailing arm provides the rear suspension with the characteristic of anti-lift control, and the horizontal upper and lower swing arms allow the rear suspension to control the wheel camber. The compact layout of the rear suspension allows the vehicle to have lower and wider luggage compartment floor, and the rear suspension does not interfere with the luggage compartment.

Rear Subframe

The rear subframe assembly includes 2WD and AWD. The rear subframe assembly has a frame structure, which is connected with the body by a 4-point hard connection and is fitted with locating pin.

The rear subframe provides mounting location for the rear upper/lower control arms, rear lateral push rod and stabilizer bar, etc. The 4WD rear subframe provides mounting point for the transmission through the 4 press-fit bushings. In addition, it also supplies mounting hook and bracket for the exhaust pipe and EPB cable. The rear subframe assembly can transfer the load of the suspension components to the lower vehicle body and weaken the impact from the collision with the body structure.

Rear Shock Absorber

The rear shock absorber is not repairable. The rear shock absorber has a compression stroke of 120mm and a rebound stroke of 80mm. The rear shock absorber is a dual barrel type structure, can be inflated and fuelled. This type of structure allows the movement of shock absorber piston inside the inner cylinder with a oil hole which is between the inner and outer cylinder. This structure minimizes the cavitation and eliminates the influence of the piston motion due to the damage of outer cylinder. There is a non-repairable bushing at the lower part of the shock absorber, which is connected to the trailing arm extension bar by bolts. This fitting position can provide a 1:1 mechanical lever ratio for the rear shock absorber and enhance vibration control. The rear shock absorber strut and upper mounting support are secured by a lock nut and rebound gasket. The upper mounting support is connected with the body by two bolts. The rebound gasket is between the lock nut of the rear shock absorber strut and the upper mounting support. The bumper block is on the rear shock absorber strut, which slows down the shock absorber when the maximum compression stroke is achieved.

Coil Spring

The coil spring made of chrome steel is between the body and the rear lower swing arm, and each spring is between the upper and lower spring vibration isolator which can reduce the noise delivered to the body from the suspension. Every vibration isolator is directly connected with the spring. The lower vibration isolator is fitted in a flat hole of the rear lower swing arm, when removing, pull it out from the flat hole. The cut hole of lower vibration isolator is used for drainage, when fitting, align it with the corresponding hole of the rear upper swing arm.

Rear Upper Swing Arm

The rear upper swing arm is an unrepairable structural part, which is welded with a sleeve by stamping the hot rolled steel plate into a U punching sheet. The inside of the rear upper control arm is fitted with a rubber bushing which is connected with the rear subframe by a bolt and a nut. The outside of the rear upper control arm is open, which is connected to the rear wheel bracket by a bolt and a nut. The punching sheet of the rear upper control arm is also provided with the mounting hole of the wheel speed sensor which is connected by a clip.

Rear Lower Swing Arm

The rear lower swing arm is stamped from hot rolled steel plate, the box type part welded through the upper side and lower side loads the spring and connects the connecting rod of the stabilizer bar. The inside of the rear lower swing arm is fitted with a rubber bushing which is connected to the rear subframe by an eccentric bolt, an eccentric gasket and a nut, and the eccentric bolt can be used to adjust the four-wheel alignment toe-in of the rear axle. The outside of the rear lower swing arm is connected to the rear wheel bracket by a bolt and a nut.

Caution: Do not jack the vehicle under the front or rear lower arm as damage or misalignment may occur.

Rear Lateral Push Rod

The rear lateral push rod is an unrepairable structural part which is welded by two sleeves and one hollow link, and the two sleeves are fitted with a rubber bushing respectively. The inside of the rear lateral push rod is connected with the rear subframe by an eccentric bolt, an eccentric gasket and a nut, and the eccentric bolt can be used to adjust the camber and toe-in of the rear axle for four-wheel alignment. The outside

www.cargeek.ir

of the rear lateral push rod is connected with the rear wheel bracket by a bolt, a gasket and a nut.

Trailing Arm

The rear trailing arm is stamped by high strength steel, which is a single piece, has the shape of a blade and is used for transferring the driving force and brake force of the rear wheel to the body. The front of the trailing arm is fitted with a welded pipe for fitting the rubber bushing which is connected with the blade arm bracket by a bolt and a nut, and the bracket is connected to the body by 4 bolts. The rear of the trailing arm is connected to the rear wheel bracket by 3 bolts. Since different ways are used to tighten the bolt, the body bolt can be reused while the wheel bracket bolt cannot be reused. In order to relieve the longitudinal impact of the rear axle, the longitudinal structure of the rubber bushing applies a hollow design. If the bushing shall be replaced, carefully observe and make a mark for future installation.

Horizontal Stabilizer Bar and Connecting Rod

The horizontal stabilizer bar made of solid spring steel is directly connected to the wheel hub bracket. The diameter of the horizontal stabilizer bar is 19mm. The horizontal stabilizer bar is connected to the rear side of the subframe by two polytetrafluoroethene (PTFE) sleeves, and the PTFE sleeves are secured with bolts and clamping plate. The PTFE sleeve has a low friction, and does not need extra lubrication, which allows the static horizontal stabilizer bar to rotate freely and give rapid response to the overturn input. The end of the rear horizontal stabilizer bar is connected with the trailing arm by the unrepairable connecting rod of the rear horizontal stabilizer bar, and each connecting rod of the rear horizontal stabilizer bar connects the rear horizontal stabilizer bar by the ball joint and the lower cross arm by the upper/lower rubber bushings. The ball joint can improve the response speed to vehicle overturn and efficiency. When connecting each connecting rod to the rear horizontal stabilizer bar, the ball joint shall be outside the mounting surface of the rear horizontal stabilizer bar, while the nut is on the inside.

www.cargeek.ir

www.cargeek.ir

Service Procedures

Rear Upper Swing Arm Assembly

Remove

1. Raise the vehicle on a lift.
2. Remove the rear wheel.

☞ **Wheel Remove**

3. Remove the clip securing the harness on the rear upper swing arm assembly.

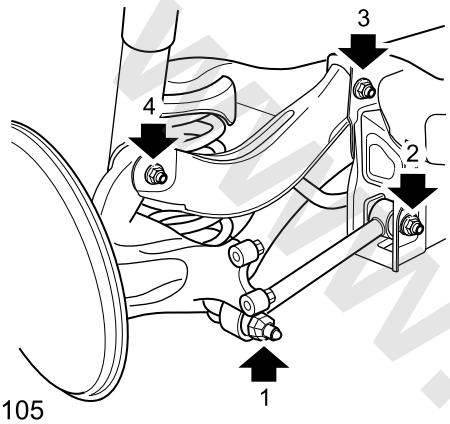

S2223105

4. Remove the bolt (4) and nut fixing the rear upper swing arm assembly to rear wheel bracket, and discard the nut.
5. Remove the bolt and nut (3) fixing the rear upper swing arm assembly to rear subframe, and discard the nut.

Refit

1. Locate the upper swing arm of the rear suspension to the subframe, fit the bolt, but do not tighten it at this step.
2. Locate the upper swing arm of the rear suspension to the wheel bracket, fit the bolt, but do not tighten it at this step.
3. Tighten the nut fixing the upper swing arm of the rear suspension to the rear subframe to **100±10Nm**.
4. Tighten the nut fixing the upper swing arm of the rear suspension to the wheel bracket to **50Nm+90°**.

Caution: Nuts and bolts must be tightened with weight of vehicle on suspension.

5. Secure the harness on the upper swing arm clip of the rear suspension.
6. Fit the rear wheels.

☞ **Wheel Refit**

Rear Lower Swing Arm Assembly

Remove

1. Remove the rear suspension spring assembly.

☞ **Rear Suspension Spring Assembly Remove**

2. Release the nut (1) fixing the lower swing arm assembly of the rear suspension to the rear subframe, and remove the lower swing arm assembly.

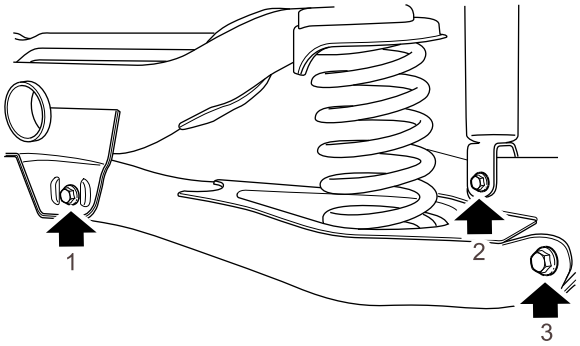

S2223111

Refit

1. Fit the bolt fixing the rear lower swing arm to the rear subframe, pre-tighten the bolt by hand, but do not tighten it.
2. Fit the rear suspension spring assembly.

☞ **Rear Suspension Spring Assembly Refit**

3. Tighten the nut securing the rear lower swing arm assembly and subframe to **100±10Nm**.
4. Tighten the nut securing the rear lower swing arm assembly and wheel bracket to **155±15Nm**.
5. Four-wheel Alignment Check and Adjustment

☞ **Four-wheel Alignment**

www.cargeek.ir

Rear Upper Swing Arm Bush

Remove

1. Remove the rear upper swing arm assembly.

☞ **Rear Upper Swing Arm Assembly Remove**

2. With the **TCH00100** and hydraulic machine, press the bushing.

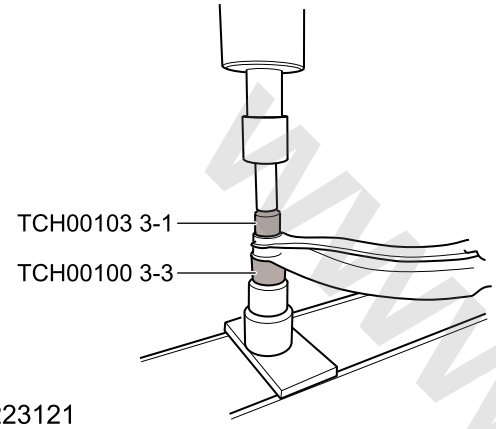

S2223121

3. Remove the tool from the rubber bushing.

Refit

1. Clean the groove of the rubber bushing.
2. With the **TCH00100** and hydraulic machine, press the new rubber bushing into the rear upper swing arm (see the figure).

Caution: Ensure the rubber end of the bush is located fully in the special tools. Use a hydraulic press to install bush.

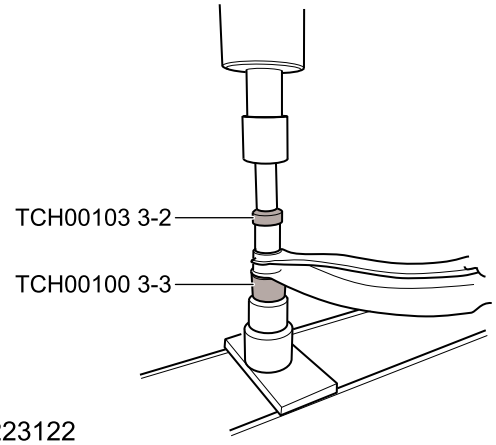

S2223122

3. Remove the tool from the ball joint sheath.
4. Fit the rear upper swing arm assembly.

☞ **Rear Upper Swing Arm Assembly Refit**

Rear Shock Absorber Assembly

Remove

1. Raise the vehicle on a lift.
2. Remove the rear wheels.

☞ **Wheel Remove**

3. Remove the bolt (2) fixing the rear shock absorber to the wheel bracket.

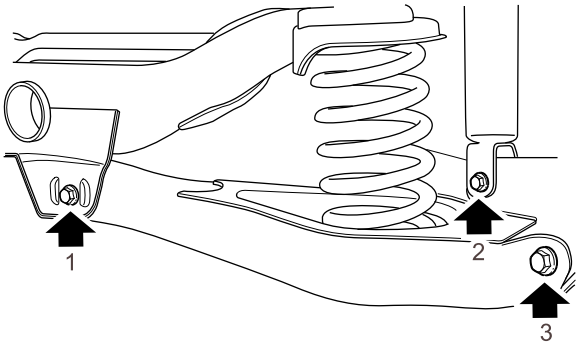

S2223111

4. Remove 2 bolts fixing the rear shock absorber to the body, remove the shock absorber and discard the nut.

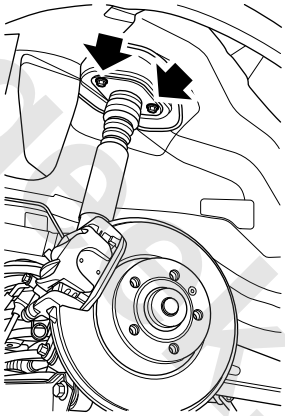

S2223109

5. Lock the piston of the shock absorber with a wrench. Remove and discard the shock absorber nut.
6. Remove the rebound limit disc, mounting support, bumper block/limit disc of the compression stroke and dust shield. Mark the original location of the rebound limit disc of the rear shock absorber.

www.cargeek.ir

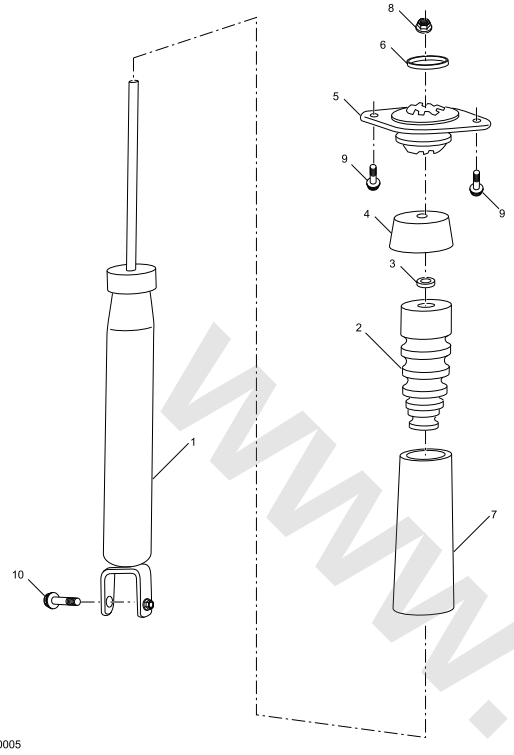

Refit

1. Fit the dust shield, bumper block/limit disc of the compression stroke, mounting support and rebound limit disc, and ensure the rebound limit disc of the rear shock absorber is located on the original position.
2. Fit the bolt at the top of the rear shock absorber strut and tighten to **50–65Nm**.
3. Clean the mating face of the rear vibration absorber assembly and body.
4. Fit the rear shock absorber assembly to the wheel bracket, but do not tighten it at this step.
5. Stretch the rear vibration absorber assembly and locate it to the mating face of the vehicle body.
6. Fit the nuts fixing the rear vibration absorber assembly to the vehicle body and tighten to **50–65Nm**.
7. Tighten the nut securing the rear vibration absorber assembly and wheel bracket to **75–90Nm**.
8. Fit the rear wheels.

Wheel Refit

9. For vehicles with DHL, perform a self-learning for the null voltage of the DHL height sensor.

Self-learning and Adjustment, Programming and Coding - Height Sensor Null Voltage Self-learning

Rear Suspension Spring Assembly

Remove

1. Raise the vehicle on a lift.
2. Remove the rear wheels.

Wheel Remove

3. Support the rear lower swing arm through the spring seat of the rear lower swing arm.

Caution: Do not jack the vehicle under the front or rear lower arm as damage or misalignment may occur.

4. Remove the bolt (3) securing the rear lower swing arm and wheel bracket, and release the rear lower swing arm.

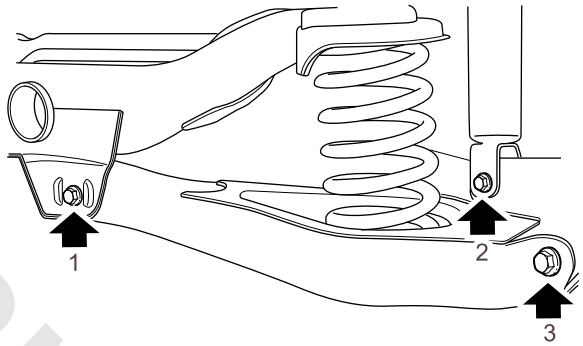

S2223111

5. Remove the rear suspension spring assembly.

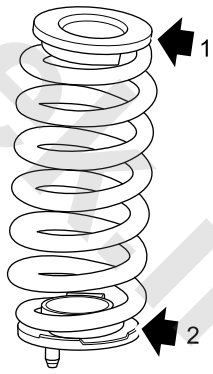

S2223112

6. Remove the upper/lower vibration isolators (1), (2) of the rear suspension spring assembly.

Refit

1. Clean the mating face of the rear lower swing arm and spring.
2. Locate the rear suspension spring assembly on the rear lower swing arm, and ensure the bulge on the lower vibration isolator of the rear suspension spring is aligned with the rear lower swing arm.
3. Support the rear lower swing arm and fit the upper vibration isolator of the rear suspension spring into the lug of the rear subframe.

www.cargeek.ir

www.cargeek.ir

4. Fit the bolts fixing the rear lower swing arm to the wheel bracket, but do not tighten temporarily.
5. Fit the rear wheels and tighten bolts to **120–130Nm**.
6. Tighten the bolt securing the rear lower swing arm and wheel bracket to **155±15Nm**.

Caution: Nuts and bolts must be tightened with weight of vehicle on suspension.

7. For vehicles with DHL, perform a self-learning for the null voltage of the DHL height sensor.

☞Self-learning and Adjustment, Programming and Coding - Height Sensor Null Voltage Self-learning

Rear Horizontal Stabilizer Bar

Remove

1. Raise the vehicle on a lift.
2. Remove and discard 4 bolts (1) fixing the rear horizontal stabilizer bar to the rear subframe, and remove the bushing and clip of the rear stabilizer bar.

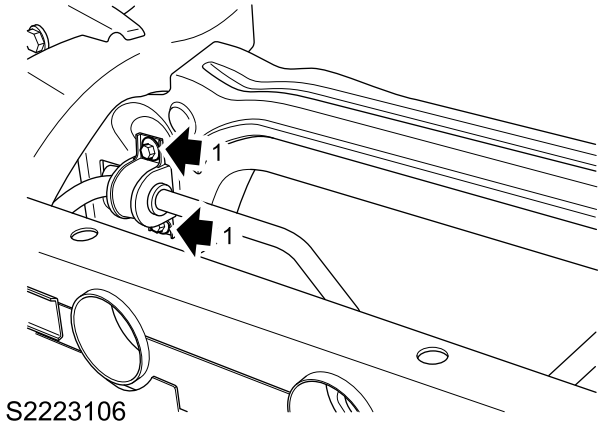

3. Lock the connecting rod of the rear horizontal stabilizer bar with an open-end wrench and prevent rotation of the ball joint. Remove the nuts fixing the rear horizontal stabilizer bar to the connecting rod of the rear horizontal stabilizer bar. Remove the rear horizontal stabilizer bar.

Refit

1. Align the connecting rod of the rear horizontal stabilizer bar, fit bolts and nuts, but do not tighten them.
2. Fit 2 bushings of the rear horizontal stabilizer bar.
3. Fit the mounting bracket of the rear horizontal stabilizer bar. Fit new bolts and tighten each bolt to **100±10Nm** in sequence.
4. Lock the connecting rod of the rear horizontal stabilizer bar with an open-end wrench and prevent rotation of the ball joint, then tighten the nut to **45–55Nm**.
5. Lower the vehicle with the lift.

www.cargeek.ir

Rear Horizontal Stabilizer Bar Connecting Rod

Remove

1. Raise the vehicle on a lift.
2. Remove and discard the nut fixing the connecting rod of the rear horizontal stabilizer bar to the rear lower swing arm, and keep the gasket and bushing.

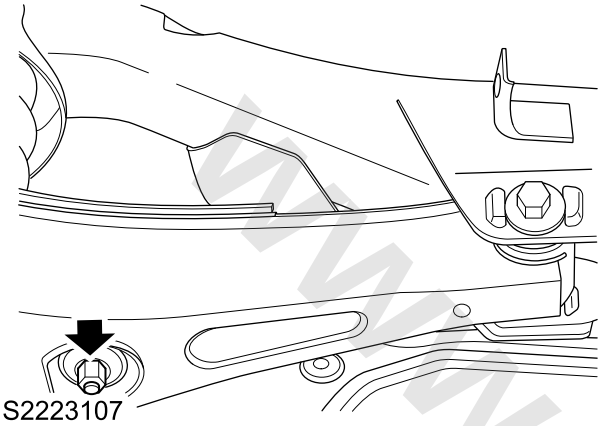

3. Remove the nut fixing the connecting rod of the rear horizontal stabilizer bar to rear horizontal stabilizer bar, remove the connecting rod and keep the other 2 gaskets and 1 bushing.

Refit

1. Fit 1 bushing and 1 gasket on the connecting rod of the rear horizontal stabilizer bar to the rear lower swing arm, and fit the bolt on the other end of the connecting rod into the rear horizontal stabilizer bar.

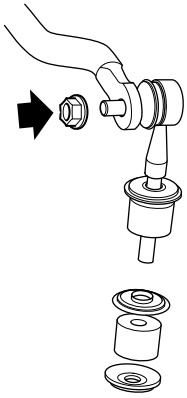

2. Fit the nut fixing the connecting rod of the rear horizontal stabilizer bar to the rear horizontal stabilizer bar, and tighten to **45–55Nm**.
3. Fit the other 2 gaskets and bushings into the connecting rod of the rear horizontal stabilizer bar, fit the nut fixing the connecting rod of the rear horizontal stabilizer bar to the rear lower swing arm and tighten the nut to **7–11mm** until the thread can be seen.

Rear Horizontal Stabilizer Bar Bushing

Remove

1. Raise the vehicle on a lift.
2. Remove and discard 4 bolts (1) fixing the bracket of the rear horizontal stabilizer bar to the subframe, and remove the bracket.

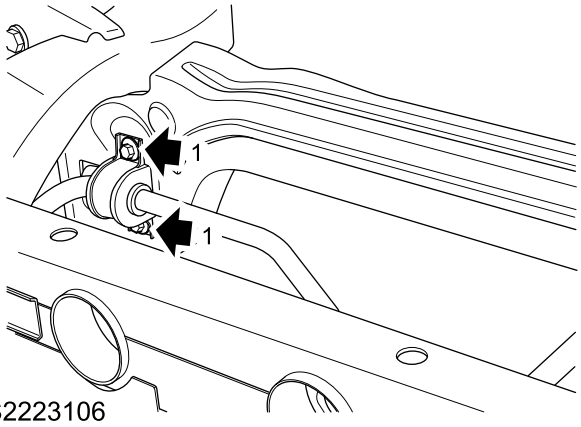

3. Remove the bushing of the rear horizontal stabilizer bar.

Refit

1. Fit the bushing of the rear horizontal stabilizer bar.
2. Fit the bracket of the rear horizontal stabilizer bar, fit new bolts and tighten to **50–65Nm**.
3. Lower the vehicle.

www.cargeek.ir

Rear Lower Swing Arm Bush

Remove

1. Remove the rear lower swing arm assembly.

☞ **Rear Lower Swing Arm Assembly Remove**

2. With the **TCH00101** and hydraulic machine, press the ball joint sheath.

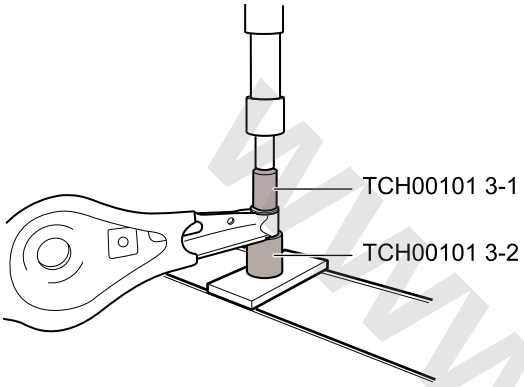

S2223117

3. Remove the tool from the ball joint sheath.

Refit

1. Clean the groove of the rubber bushing.
2. With the **TCH00101** and hydraulic machine, press the new rubber bushing into the rear upper swing arm (see the figure).

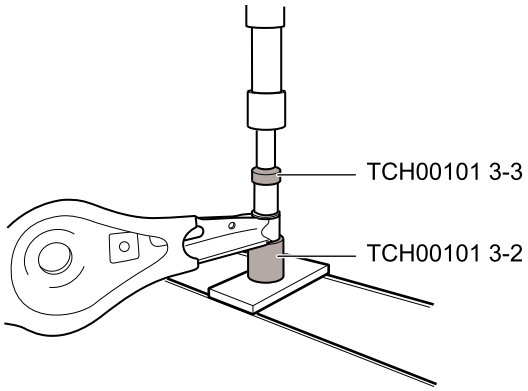

S2223118

3. Remove the tool from the rubber bushing.

Caution: Ensure the rubber end of the bush is located fully in the special tools. Use a hydraulic press to install bush.

4. Fit the rear lower swing arm assembly.

☞ **Rear Lower Swing Arm Assembly Refit**

Rear Wheel Hub

Remove

1. Raise the vehicle on a lift.
2. Remove wheels.

☞ **Wheel Remove**

3. Remove and discard 2 bolts fixing the rear brake caliper assembly to the rear wheel bracket.
4. Secure the rear brake caliper assembly on the frame.
5. Remove the countersunk head screws fixing the rear brake disc to the wheel hub.
6. Remove the rear brake disc from the vehicle.
7. For 2WD vehicles, remove the grease cap of the rear wheel hub from the rear wheel hub assembly and discard the cap.

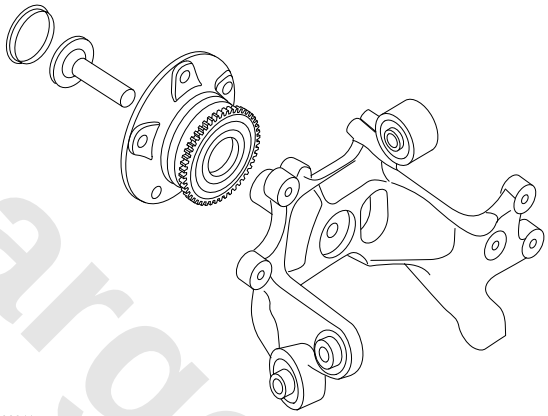

S2223115

8. For 2WD vehicles, remove and discard the countersunk head bolt securing the rear wheel bracket and real wheel hub assembly.
9. For 4WD vehicles, remove and discard the rear drive shaft nut.

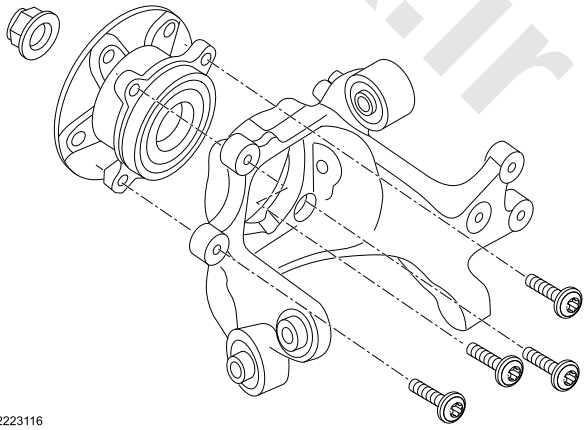

S2223116

10. For 4WD vehicles, remove and discard 4 bolts fixing the rear wheel hub assembly to the wheel bracket.
11. Remove the rear wheel hub bearing assembly.

Caution: Do not store hub bearings near magnetic fields or iron filings as damage may occur.

www.cargeek.ir

Refit

1. Clean the half shaft.
2. Check the wheel bracket and bearing, and ensure the mating face between the parts is free from foreign material and scratch.
3. Fit the wheel bracket and rear wheel hub bearing assembly to the half shaft.

Caution: Do not remove protective cover from bearing until hub is about to be fitted.

4. Insert the bolt for 2WD vehicles into the internal spindle thread of the hub bearing assembly, and tighten the bolt to **180Nm + 180°**.
5. For 2WD vehicles, use the magnet in the front of the **TCH00083** to absorb the the grease cap and put it into the flange hole of the bearing, knock the **TCH00083** with a hammer, apply uniform force when fitting, the grease cap shall not tilt. After assembly, check if the part fits well.
6. For 4WD vehicles, insert the bearing assembly into the wheel bracket and ensure the thread hole is aligned with the through-hole of the wheel bracket. Insert 4 fillister head bolts from the inside of the wheel bracket, and pre-tighten the 4 bolts, then tighten the bolt to **70Nm + 90°** in the diagonal sequence.

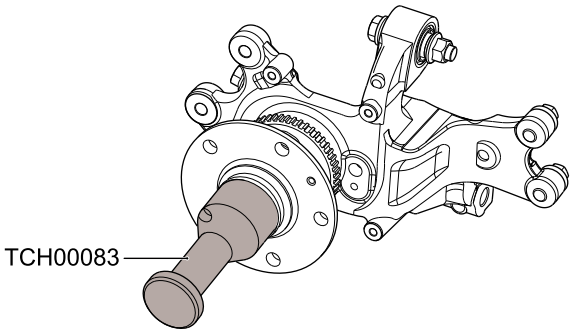

S2223125

7. For 4WD vehicles, fit the new rear drive shaft nut and tighten it to **350–370Nm**.
8. Keep the mating face between the rear brake disc and the wheel hub clean.
9. Fix the rear brake disc to the wheel hub, fit 1 countersunk head screw, tighten to **7-10Nm** and check the torque.
10. Check the mounting surface and hole of the wheel bracket and rear brake caliper assembly, remove the foreign material or oil stain and ensure the mounting surface and hole are clean.
11. Fix the rear brake caliper assembly to the rear wheel bracket, fit 2 bolts and tighten to **55 Nm+30°**.
12. Fit the rear wheels.

☞ Wheel Refit

www.cargeek.ir

www.cargeek.ir

Rear Subframe Assembly

Remove

1. Raise the vehicle on a lift.
2. Remove two rear wheels.

Wheel Remove

3. Remove the rear exhaust pipe (muffler).

Rear Exhaust Pipe - Muffler Remove

4. Disconnect 2 connectors of the ABS vehicle speed sensor and brake pad wear sensor.

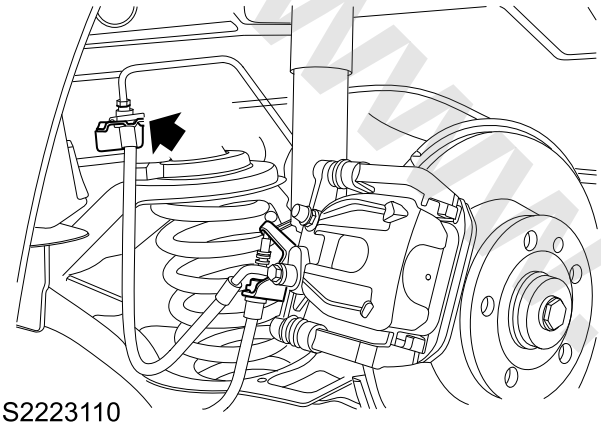

S2223110

5. Remove the clip (1), (2) fixing the EPB cable to the subframe.

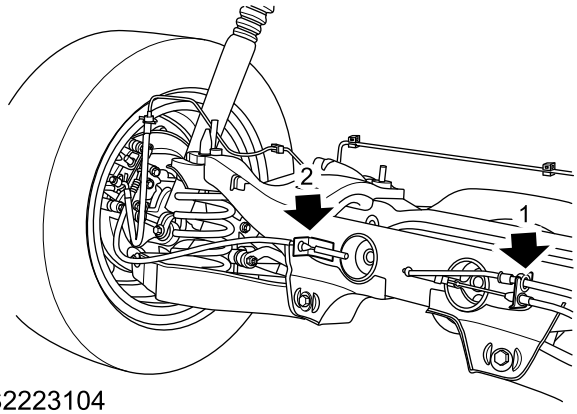

S2223104

6. Prepare a container to collect the spilled liquid.
7. Disconnect the left brake hose from the body bracket.
8. Repeat the above steps for the other side.
9. Remove the rear suspension spring assembly.

Rear Suspension Spring Assembly Remove

10. Remove the bolt (4) securing the rear upper swing arm and rear wheel bracket assembly.
11. Remove and discard the bolt (1) securing the lateral push rod and rear wheel bracket assembly.

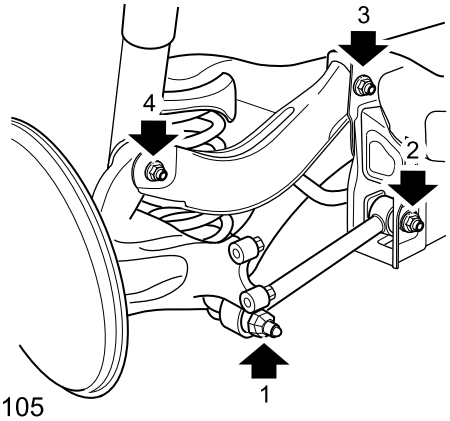

S2223105

12. Remove the bolt (3) securing the rear lower swing arm and rear wheel bracket.

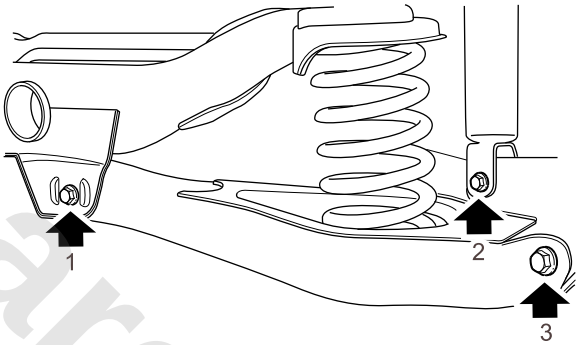

S2223111

13. Support the subframe with the hydraulic lifting equipment.
14. Remove 4 subframe bolts and keep the washer properly.
15. Lower the rear subframe with the hydraulic lifting equipment.
16. If the subframe has been removed, do not attempt to repeat the operation.
17. Remove the nut and bolt fixing the lateral push rod to the subframe, and do the same operation for the other side.
18. Remove the nut fixing the connecting rod of the rear horizontal stabilizer bar to the rear lower swing arm, and keep the gasket and bushing. Do the same operation for the other end.
19. Remove the bolt securing the rear lower swing arm and subframe, and release the rear lower swing arm. Do the same operation for the other end.
20. Remove the bolt securing the rear upper swing arm and subframe, and release the rear upper swing arm. Do the same operation for the other end.
21. Remove 4 bolts and 2 brackets fixing the rear horizontal stabilizer bar to the subframe, and release the rear horizontal stabilizer bar.

www.cargeek.ir

www.cargeek.ir

Refit

1. Fit the bolts fixing the rear upper swing arm to the subframe, but do not tighten temporarily. Do the same operation for the other end.
2. Fit the bolts fixing the rear lower swing arm to the subframe, but do not tighten temporarily. Do the same operation for the other end.
3. Fit the bolts fixing the rear lateral push rod to the subframe, but do not tighten temporarily. Do the same operation for the other end.
4. Clean mating face of the subframe and body.
5. Locate the subframe on the body with a hydraulic lifting equipment.
6. Fit the bolt and gasket fixing the subframe to the body, and tighten the bolt to **90Nm+90°**.
7. Fit two rear suspension spring assemblies.

☞ **Rear Suspension Spring Assembly Refit**

8. Fit the bolt fixing the lower swing arm to the wheel bracket, and tighten to **155±15Nm**.
9. Fit the bolt fixing the upper swing arm to the wheel bracket, and tighten to **50Nm+90°**.
10. Fit the bolt fixing the rear lateral push rod to the wheel bracket, and tighten to **130Nm+90°**.
11. Tighten the nut fixing the rear horizontal stabilizer bar and the connecting rod of the rear horizontal stabilizer bar to **45–55Nm**.
12. Locate the rear horizontal stabilizer bar on the rear subframe, secure with bushing and bracket and tighten the bolt to **50–65Nm**. Fit 2 gaskets and bushing into the connecting rod of the rear horizontal stabilizer bar, fit the nut fixing the connecting rod of the rear horizontal stabilizer bar to the rear lower swing arm and tighten the nut to **7–11mm** until the thread can be seen.
13. Connector the ABS and brake lining alarm connector.
14. Fit the clip fixing the EPB cable to the subframe.
15. Fit the rear exhaust pipe (muffler).

☞ **Rear Exhaust Pipe - Muffler Refit**

16. Check the four-wheel alignment parameters and align the four wheels.

☞ **Four-wheel Alignment**

Rear Subframe Assembly - AWD

Remove

1. Raise the vehicle on a lift.
2. Remove two rear wheels.

☞ **Wheel Remove**

3. Remove the rear exhaust pipe (muffler).

☞ **Rear Exhaust Pipe - Muffler Remove**

4. Remove the rear axle assembly.

☞ **Rear Axle Assembly Remove**

5. Disconnect 2 connectors of the ABS vehicle speed sensor and brake pad wear sensor.
6. Remove the clip (1), (2) fixing the EPB cable to the subframe.
7. Prepare a container to collect the spilled liquid.
8. Disconnect the left brake hose from the body bracket.
9. Repeat the above steps for the other side.
10. Remove the rear suspension spring assembly.

☞ **Rear Suspension Spring Assembly Remove**

11. Remove the bolt (4) securing the rear upper swing arm and rear wheel bracket assembly.
12. Remove and discard the bolt (1) securing the lateral push rod and rear wheel bracket assembly.
13. Remove the bolt (3) securing the rear lower swing arm and rear wheel bracket.
14. Support the subframe with the hydraulic lifting equipment.
15. Remove 4 subframe bolts and keep the washer properly.
16. Lower the rear subframe with the hydraulic lifting equipment.
17. If the subframe has been removed, do not attempt to repeat the operation.
18. Remove the nut and bolt fixing the rear lateral push rod to the subframe, and do the same operation for the other side.
19. Remove the nut fixing the connecting rod of the rear horizontal stabilizer bar to the rear lower swing arm, and keep the gasket and bushing. Do the same operation for the other end.
20. Remove the bolt securing the rear lower swing arm and subframe, and release the rear lower swing arm. Do the same operation for the other end.
21. Remove the bolt securing the rear upper swing arm and subframe, and release the rear upper swing arm. Do the same operation for the other end.
22. Remove 4 bolts and 2 brackets fixing the rear horizontal stabilizer bar to the subframe, and release the rear horizontal stabilizer bar.

www.cargeek.ir

Refit

1. Fit the bolts fixing the rear upper swing arm to the subframe, but do not tighten temporarily. Do the same operation for the other end.
2. Fit the bolts fixing the rear lower swing arm to the subframe, but do not tighten temporarily. Do the same operation for the other end.
3. Fit the bolts fixing the lateral push rod to the subframe, but do not tighten temporarily. Do the same operation for the other end.
4. Clean mating face of the subframe and body.
5. Locate the subframe on the body with a hydraulic lifting equipment.
6. Fit the bolt and gasket fixing the subframe to the body, and tighten the bolt to **90Nm+90°**.
7. Fit two rear suspension spring assemblies.

Rear Suspension Spring Assembly Refit

8. Fit the bolt fixing the lower swing arm to the wheel bracket, and tighten to **155±15Nm**.
9. Fit the bolt fixing the upper swing arm to the wheel bracket, and tighten to **50Nm+90°**.
10. Fit the bolt fixing the connecting rod to the wheel bracket, and tighten to **130Nm+90°**.
11. Fit the rear axle assembly.

Rear Axle Assembly Refit

12. Tighten the nut fixing the rear horizontal stabilizer bar and the connecting rod of the rear horizontal stabilizer bar to **45–55Nm**.
13. Locate the rear horizontal stabilizer bar on the rear subframe, secure with bushing and bracket and tighten the bolt to **50–65Nm**. Fit 2 gaskets and bushing into the connecting rod of the rear horizontal stabilizer bar, fit the nut fixing the connecting rod of the rear horizontal stabilizer bar to the rear lower swing arm and tighten the nut to **7–11mm** until the thread can be seen.
14. Connector the ABS and brake lining alarm connector.
15. Fit the clip fixing the EPB cable to the subframe.
16. Fit the rear exhaust pipe (muffler).

Rear Exhaust Pipe - Muffler Refit

17. Check the four-wheel alignment parameters and align the four wheels.

Four-wheel Alignment

Rear Lateral Push Rod Assembly

Remove

1. Raise the vehicle on a lift.
2. Remove the rear wheels.

Wheel Remove

3. Remove the eccentric bolt and nut (2) fixing the rear lateral push rod assembly to the rear subframe, discard the nut and remove the washer.

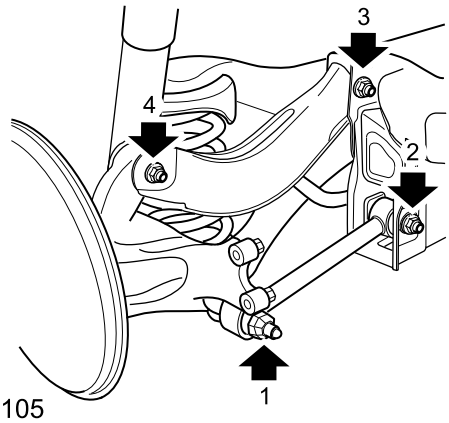

S2223105

4. Remove and discard the bolt and nut (1) fixing the rear lateral push rod assembly to the rear wheel bracket.
5. Remove the rear lateral push rod.

Refit

1. Fit the bolt and nut fixing the rear lateral push rod assembly to the rear wheel bracket, but do not tighten the bolt and nut.
2. Fit the bolt, washer and nut fixing the rear lateral push rod assembly to the rear subframe, and tighten the nut to **100±10Nm**.
3. Tighten the nut securing the rear lateral push rod assembly and rear wheel bracket to **130Nm+90°**.
4. Perform four-wheel alignment.

Four-wheel Alignment

5. Fit wheels.
6. Lower the vehicle.

www.cargeek.ir

Rear Lateral Push Rod Bushing

Remove

1. Remove the rear lateral push rod assembly.

☞ **Rear Lateral Push Rod Assembly Remove**

2. With the special tool **TCH00100**, press the rear lateral push rod bushing with the hydraulic machine as shown in the figure.

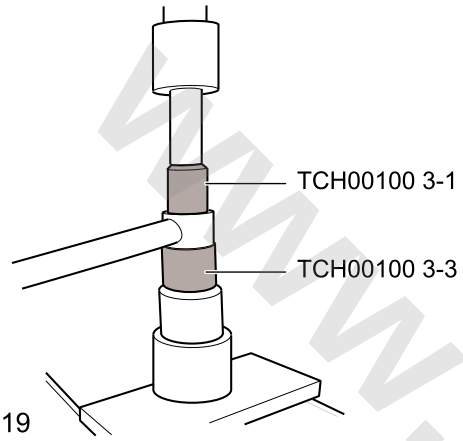

S2223119

Refit

1. Clean the groove of the rubber bushing.
2. With the **TCH00100** and hydraulic machine, press the new rubber bushing into the rear lateral push rod (see the figure).

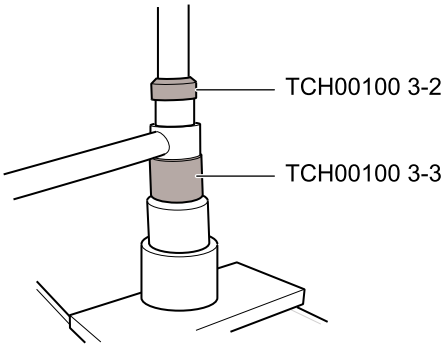

S2223120

3. Fit the rear lateral push rod assembly.

☞ **Rear Lateral Push Rod Assembly Refit**

Trailing Arm Assembly

Remove

1. Raise the vehicle on a lift.
2. Remove the rear wheels.

☞ **Wheel Remove**

3. For vehicles with DHL, remove 1 nut fixing the DHL front suspension height sensor to the rear trailing arm, and disconnect the height sensor.
4. Remove 3 bolts (2) securing the trailing arm and wheel bracket.

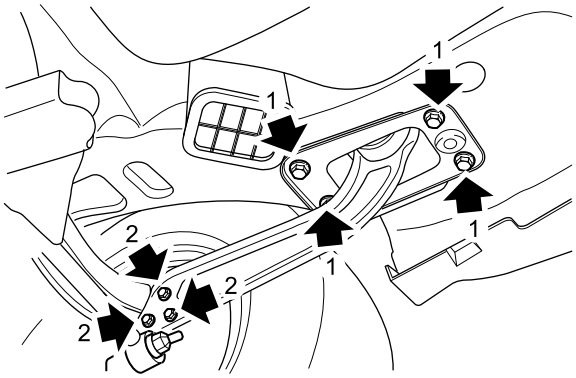

S2223113

5. Remove 4 bolts (1) securing the trailing arm assembly and body.

Refit

1. Fit the bolt and nut fixing the trailing arm to the wheel bracket, and tighten to **60±5Nm**.
2. Tighten 4 bolts securing the trailing arm and body to **100±10Nm**.
3. For vehicles with DHL, fix the DHL front suspension height sensor to the rear trailing arm, fit 1 nut and tighten to **7–10Nm**.

Caution: In the refit process, please check the rear suspension height sensor control arm, make sure the direction of control arm point to vehicle head (arrow direction indicated on diagram).

4. Fit the rear wheels.

☞ **Wheel Refit**

5. For vehicles with DHL, perform a self-learning for the null voltage of the DHL height sensor.

☞ **Self-learning and Adjustment, Programming and Coding – Height Sensor Null Voltage Self-learning**

www.cargeek.ir

Rear Trailing Arm Bushing

Remove

1. Remove the rear trailing arm assembly.

Rear Trailing Arm Assembly Remove

2. Remove the bolt fixing the cover plate of the rear trailing arm to the rear trailing arm.

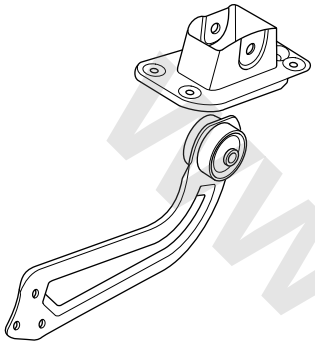

S2223114

3. With the **TCH00102** and hydraulic machine, press the ball joint sheath.

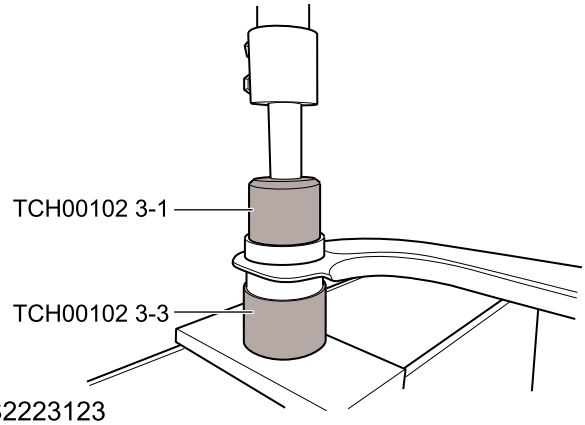

S2223123

4. Remove the tool from the rear trailing arm bushing.

Refit

1. Clean the groove of the rubber bushing.
2. With the **TCH00102** and hydraulic machine, press the new rubber bushing into the rear trailing arm (see the figure).

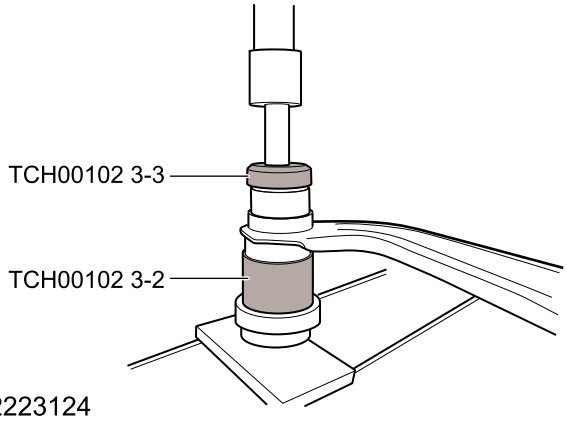

S2223124

3. Connect the bolt and nut securing the rear welded trailing arm assembly and bracket, and tighten to **155±10Nm**.
4. Fit the rear trailing arm assembly.

Rear Trailing Arm Assembly Refit

www.cargeek.ir

Special Tools

Tool Number	Description	Picture
TCH00100	Remove and replacer rear upper arm bush	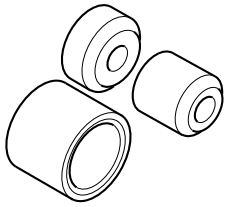 TCH00100
TCH00101	Remove and replacer rear lower arm bush	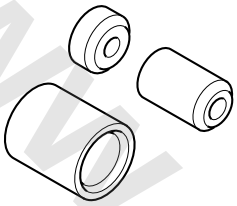 TCH00101
TCH00083	Rear bearing cap replacer	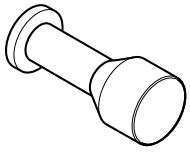 TCH00083
TCH00102	Remove and replacer rear trailing arm bush	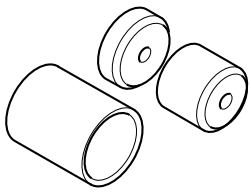 TCH00102

www.cargeek.ir

www.cargeek.ir

Tyres and Wheels

Specifications

Torque

Description	Value
Bolt-wheel to hub	120–130Nm

www.cargeek.ir

www.cargeek.ir

Service Procedures

Wheel

Warning: Do not use silicone lubricant on the or wheel rim or tyre edge. Clean tyre edge before removing. Use 50% non-silicone lubricant and 50% water based lubricant to these areas prior to refitting.

Remove

1. Remove the wheel trim cover assembly with a screwdriver.
2. Remove the wheel bolt cap with the special tool.
3. With wheel wrench, rotate the bolt of each wheel counterclockwise (half circle).
4. Place the vehicle on the lift and lift to a certain height.
5. Remove the wheel bolts and place them in the tool tray.
6. Remove wheels.
7. Pull out the wheel valve assembly, and remove the tyre from the rim with the tyre changer.

Warning: Use a tyre changer to remove the tyre. Manual tools or prybar could damage the road wheel or tyre.

Caution: Do not place the wheel face down on the ground to avoid scratching.

Refit

Caution: Please clean the corrosive on the surface of the road wheel, drum and brake disc before refitting. If wheel, disc and drum contact surfaces are not properly cleaned, the wheel bolts could become loose and may cause the wheel to fall off while the vehicle is moving. This will cause the vehicle to go out of control, and could cause injury.

1. Fit a new wheel valve assembly.
2. Fit the new tyre with a tyre changer and charge the tyre until the rim is in place. Ensure that the locating ring at the outside of the tyre bead is around the wheel rim flanges. This method can ensure the tyre bead is properly fitted.
3. Use a tire dynamic balancer to measure the wheel dynamic balance, match it and fit new wheel balance weights.
4. Fit the wheel and tighten the wheel bolts until the wheel is firmly secured on the hub.
5. Lower the vehicle with the lift.
6. Tighten 5 wheel bolts to **120–130Nm**. For tightening order, please see the figure below (1 to 5).

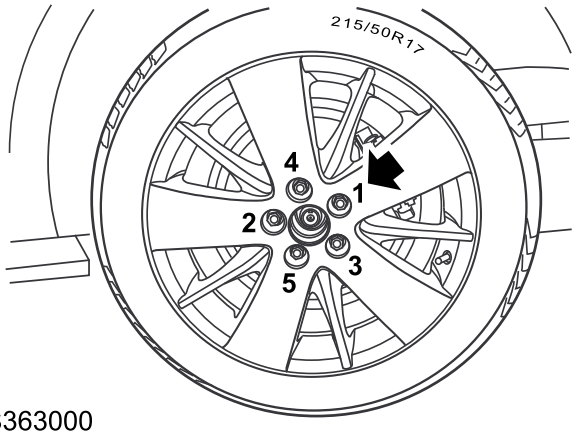

S363000

Warning: If there is oil leakage between the wheel and the brake disc or drum, it will cause the wheel bolts to become loose and result in injury with the vehicle out of control. Never use heat to remove a seized wheel. This will shorten the life of the wheel, wheel bolts, hub and bearing. Wheel bolts must be tightened in correct sequence and to correct torque to avoid distortion of wheel, brake drum or disc.

7. Fit the wheel bolt cap.
8. Fit the wheel trim cover assembly.

www.cargeek.ir

www.cargeek.ir

Brake

Specifications

Torque

Description	Value
Bolt-Front brake caliper shuck assembly to bracket	25–30Nm
Screw-Front brake pan to bearing	7–10Nm
Bolt-Front brake caliper assembly to front knuckle	190–210Nm
Bolt-Front Brake hose to front brake caliper	28–32Nm
Bolt-Rear brake caliper shuck assembly to bracket	30–33Nm
Screw-Rear brake pan to bearing	7-10Nm
Bolt-Rear brake caliper assembly to rear knuckle	55 Nm+30°
Bolt-Rear Brake hose to rear brake caliper	28–32Nm
Bolt-Clutch pedal to bracket	19–25Nm
Nut -Brake pedal to bracket	19–25Nm
Bolt-Brake pedal to bracket	19–25Nm
Bolt-Brake lamp switch to bracket	7–10Nm
Screw- Front bleeding screw	16-18Nm
Screw- Rear bleeding screw	9-13Nm
Bolt-Fluid reservoir to master cylinder	5–7Nm
Nut - master cylinder to servo	19–25Nm
Brake pipe	15-19Nm
Brake pipe connector	15-19Nm
Brake pipe to brake pipe	13–15Nm

www.cargeek.ir

www.cargeek.ir

Parameters

Model	
Diameter of Brake Disc	
Front	312mm
Rear	282mm
Minimum Thickness of Front Brake Disc	
New (Nominal Value)	25mm
Service Limit	23mm
Minimum Thickness of Rear Brake Disc	
New (Nominal Value)	12mm
Service Limit	10mm
Maximum Runout of Brake Disc (Equipped with Wheel)	0.025mm
Minimum Thickness of Front Brake Pad	
New (Nominal Value)	13.5mm
Wear Limit	2mm
Minimum Thickness of Rear Brake Pad	
New (Nominal Value)	10.5mm
Wear Limit	2mm

www.cargeek.ir

www.cargeek.ir

Description and Operation

System Layout

Brake Hydraulic System Layout

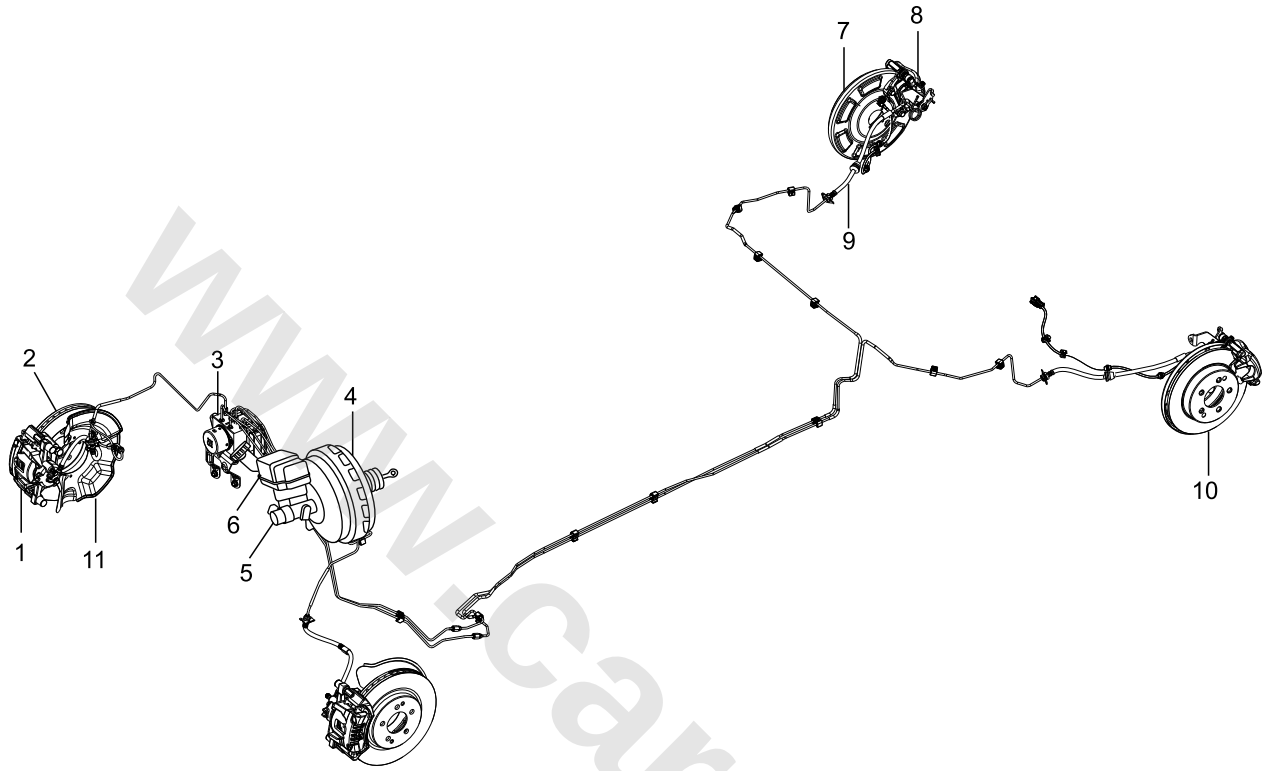

S2410011

1. Front Brake Caliper Assembly
2. Front Brake Vent Disc
3. **ABS**/**SCS** Modulator
4. Vacuum Booster
5. Brake Master Cylinder
6. Brake Fluid Reservoir
7. Rear Brake Caliper Assembly
8. Rear Brake Disc backplate
9. Rear Brake Hose
10. Rear Brake Disc
11. Front Brake Disc backplate

www.cargeek.ir

www.cargeek.ir

Description

General

The brake system consists of the front/rear disc brakes which are controlled by the dual-circuit hydraulic brake system with the vacuum booster in the diagonal way. The brake system also contains the antilock brake system (**ABS**) and electronic brake force distribution (**EBD**).

Hydraulic System Schematics

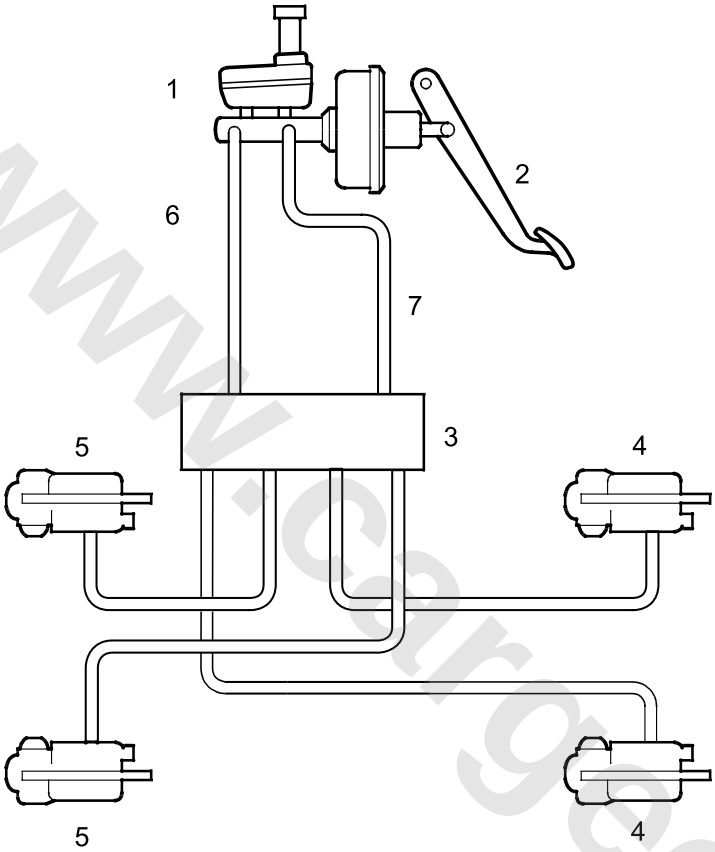

S402004

1. Brake Master Cylinder/Vacuum Booster Assembly
2. Brake Pedal
3. ABS/SCS modulator
4. Rear Brake
5. Front Brake
6. Secondary Hydraulic Circuit
7. Primary Hydraulic Circuit

Under normal operating conditions, the displacement of the brake pedal is boosted and delivered by the vacuum booster assembly to the brake master cylinder assembly. The brake master cylinder assembly converts the movement of the brake pedal into hydraulic pressure. The primary and secondary hydraulic circuit pipes deliver the hydraulic pressure to the brake through the **ABS**/**SCS**. The primary circuit supplies pressure to the left front and right rear brakes, and the secondary circuit supplies pressure to the right front and left rear brakes. The vacuum of the vacuum booster assembly is obtained through a vacuum pipeline and check valve from the engine intake manifold.

For the functions of the **ABS** and **EBD**, the **ABS**/**SCS** modulator adjusts the hydraulic pressure of the brake and controls the speed of one wheel or that of the two wheels on the same axle. These functions are controlled by the **ECU** integrated in the **ABS**/**SCS** modulator. The **ECU** also controls the alarm device on the IPK, which provides the status information of each function for the driver.

Brake Pedal and Brake Lamp Switch

The brake pedal is fitted on the shaft of the brake pedal mounting bracket located on the dash panel, and the brake booster input rod is connected to the brake pedal with rod pin and U-clip. It is located at the end of the brake pedal, which is used to control the Hall-Effect brake lamp switch on the brake pedal mounting bracket. The brake lamp switch provides two brake pedal status outputs: one is connected to the **BCM**, the other is connected to the **ECM**.

The brake lamp switch contains an inner sensor located in the external mounting slide valve. To ensure the correct fitting

www.cargeek.ir

orientation of the inner sensor, the inner sensor is fitted in the mounting slide valve in a key connection mode, the mounting slide valve is also fitted to the brake pedal mounting bracket in a key connection mode, and the mounting slide valve and the sensor make the inner sensor maintain its correct position in the slide valve with mutually matched saw teeth. When brake is released, the end on the brake pedal is against the tail end of the sensor, when the brake pedal is depressed, the end of the pedal is far away from the sensor and causes a change in the sensor output voltage.

Brake Lamp Signal Sensor

The brake lamp signal sensor is a hall effect sensor which works with the permanent magnet ring on the brake master cylinder piston. The outside housing of the brake master cylinder where the sensor locates is driven by the magnet ring. The working mechanism of the sensor is to change the hall voltage based on the change of the distance between the permanent magnet ring and the sensor hall element. When pressing the brake, the piston motion drives the magnet ring to move through the brake lamp signal sensor, this generate the magnetic flux required for signal switch. When releasing the brake, the return force from the spring drives the piston with the permanent magnet ring to its original position.

Brake Pedal Position Sensor

The brake pedal position sensor is fitted on the brake pedal bracket, which is used to detect the driver's action on the brake pedal. The brake pedal position sensor provides an analog voltage signal to the GW, which will increase when the brake pedal is depressed.

Vacuum Booster Assembly

The vacuum booster assembly provides boost during braking to reduce the pedal force required for braking. In case of the vacuum booster assembly failure, the hydraulic system still has the brake function, but greater pedal braking force is required due to lack of vacuum booster.

The vacuum booster assembly is connected to the dash panel with 4 studs. The brake master cylinder assembly is connected to two fixing bolts at the front end of the vacuum booster assembly. The vacuum booster assembly consists of a round casing with double diaphragms, a center plate, a control valve assembly, an input push rod, an output push rod and a filter. The input push rod is connected to the brake pedal, and the output push rod is located in the main piston of the brake master cylinder. A rubber protective sleeve is fitted to the control valve assembly at the point where the control valve protrudes from the rear housing. There is a hole in the front housing connected to the vacuum tube from the engine, and a check valve is fitted on the vacuum tube. The control valve assembly consists of a valve body with a vacuum valve, a piston, a vacuum valve spring and an input push rod spring. The vacuum valve body is provided with a vacuum hole. The piston controls the air inlet hole between the vacuum valve and the piston. The reaction disc and the proportional disc separate the piston from the output push rod. A guide tube is fitted on the front diaphragm in the front of the valve body, which is supported in the bushing on the center plate. The nozzle end of the guide tube is provided with a return spring. The double diaphragms and the center plate divide the internal space of the round casing into 4 mutually sealed chambers. The chambers in front of the diaphragm are connected together through the fixed channel on the control valve assembly. The chambers behind the diaphragms are connected together through the inside of the secondary diaphragm at the fixing bolt.

www.cargeek.ir

www.cargeek.ir

Brake Master Cylinder Assembly

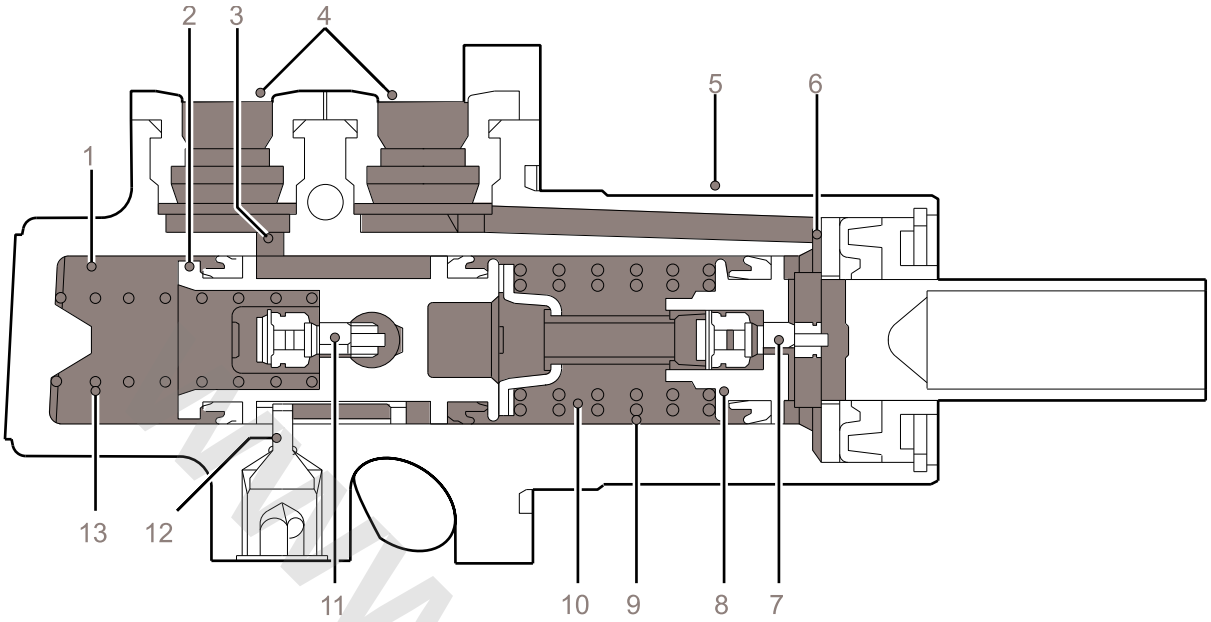

S402007

1. Secondary Pressure Chamber
2. Secondary Piston
3. Secondary Oil Inlet
4. Brake Fluid Reservoir Port
5. Brake Master Cylinder
6. Primary Oil Inlet
7. Primary Centre Valve
8. Primary Piston
9. Primary Spring
10. Primary Pressure Chamber
11. Secondary Centre Valve
12. Valve Pin
13. Secondary Spring

When the brake pedal is depressed, the brake master cylinder assembly produces hydraulic pressure so that the brake operates. The assembly is fitted in front of the vacuum booster assembly, which contains a pump body with a total of two pistons in the front and rear sections. The rear piston produces brake pressure for the primary circuit, and the front piston produces brake pressure for the secondary circuit. The brake fluid reservoir is fitted at the top of the master cylinder. The fluid reservoir is partitioned inside to feed liquid for every brake circuit independently, thus avoiding the condition that neither the primary brake circuit nor the secondary brake circuit can operate due to one brake fluid leakage. If one brake circuit is out of order, the remaining brake circuits can still effectively operate, but the brake pedal travel and the braking distance of the vehicle will increase. If the brake fluid level in the fluid reservoir is too low, turn on the brake fluid level switch, cut off the circuit between the **ABS/SCS** regulator and the instrument panel so that the brake warning lamp illuminates. The brake fluid level switch contains a reed switch located in the plastic sheath at the downside of the fluid reservoir. A permanent magnet is provided on the float in the fluid reservoir, which keeps the brake fluid level switch in the OFF state when the brake fluid level is at a suitable height. When the brake fluid level is low, the float sinks and causes the reed switch to turn ON.

Front Brake

The front brake consists of a single-piston sliding brake caliper assembly fitted to the hub, and a brake disc with ventilation device. When the hydraulic pressure is transmitted to the brake caliper, the piston stretches outward, forcing the inner brake pad to press against the brake disc. The brake caliper housing under reaction slides along the guide pin to drive the outer brake pad to come into contact with the brake disc.

Rear Brake

The brake brake consists of a single-piston sliding brake caliper assembly fitted to the hub, and a brake disc with ventilation device. The inside of the brake disc is protected by a guard plate. The EPB cable on the rear brake caliper assembly applies brake force to the rear wheel. When the hydraulic pressure is

www.cargeek.ir

transmitted to the brake caliper, the piston stretches outward, forcing the inner brake pad to press against the brake disc. The brake caliper housing under reaction slides along the guide pin to drive the outer brake pad to come into contact with the brake disc.

www.cargeek.ir

www.cargeek.ir

Service Procedures

Front Brake Pad

Remove

1. Raise the vehicle on a lift.
2. Remove wheels.

☞ **Wheel Remove**

3. Remove the stop spring of the front brake pad from the front brake caliper housing.
4. Remove the dust shield from the bolt of the front brake caliper housing.
5. Remove 2 guide pin bolts (1) securing the brake caliper housing assembly on the front brake caliper bracket.

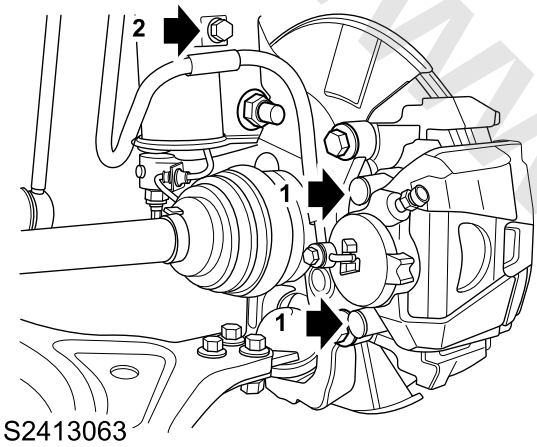

6. Remove the front brake caliper housing assembly from the front brake caliper bracket.

Caution: Do not tie or allow caliper to hang on brake hose.

7. Remove the front brake pad from the brake caliper bracket.

Refit

1. Remove all dirts and corrosives from the edge of the front brake disc.
2. Clean the front brake caliper housing and front brake caliper bracket. Check the front brake caliper and seals for damage.
3. Fit the brake pad to the brake caliper bracket.
4. Secure the front brake caliper housing assembly on the front brake caliper bracket, fit 2 guide pin bolts, tighten to **25–30Nm** and check the torque.
5. Fit the dust shield to the bolt of the front brake caliper housing.
6. Secure the stop spring of the front brake pad.
7. Fit the wheels.

☞ **Wheel Refit**

8. Lower the vehicle.
9. Press the brake pedal for several times so as to fit the front brake pad.

Tip: Pedal travel may be longer than normal during first brake applications.

www.cargeek.ir

www.cargeek.ir

Front Brake Disc

Remove

1. Raise the vehicle on a lift.
2. Remove wheels.

Wheel Remove

3. Remove 2 bolts (2) fixing front brake caliper assembly to the steering knuckle.

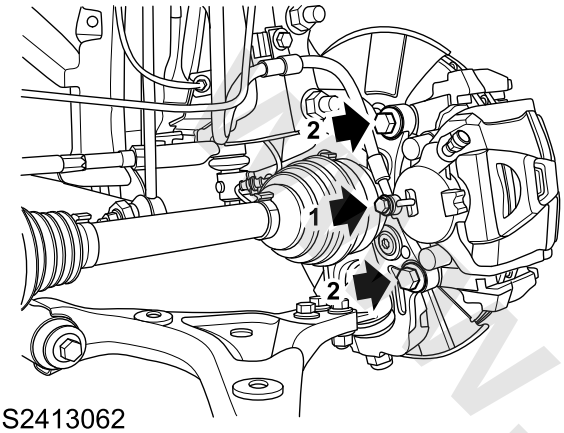

S2413062

4. Lift the brake caliper assembly and secure it on the frame.
5. Remove the countersunk screws securing the front brake disc and the front wheel drive flange.

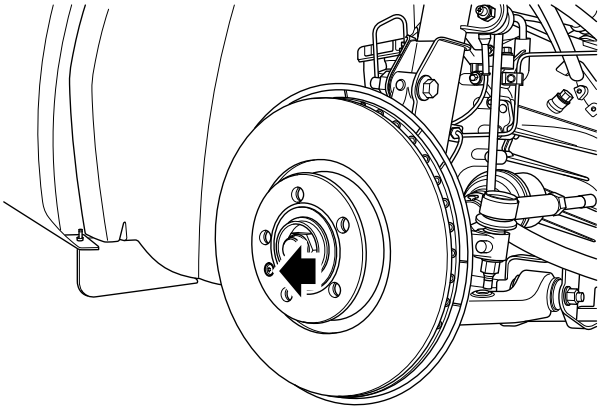

S2413024

6. Remove the front brake disc assembly.

Refit

1. Ensure the cleanness of the mating surface between the front brake disc and the front wheel drive flange.
2. Fit the front brake disc to the front wheel drive flange, fit the countersunk head screw, tighten to **7–10Nm** and check the torque.
3. Check the runout of the front brake disc.

Thickness and Circular Runout Check – Front Brake Disc

4. Check the front brake pad, replace it if necessary.
5. Fit the brake caliper assembly to the steering knuckle, fit 2 bolts, tighten to **190–210Nm** and check the torque.
6. Fit the wheels.

Wheel Refit

7. Lower the vehicle.

www.cargeek.ir

www.cargeek.ir

Front Brake Caliper Housing Assembly

Remove

1. Raise the vehicle on a lift.
2. Remove wheels.

☞ **Wheel Remove**

3. Place a suitable container under the vehicle to collect the spilled fluid.
4. Remove 1 bolt and washer (1) fixing the brake hose to the front brake caliper housing, and disconnect hose.

Caution: Before disconnecting or removing components, ensure the immediate area around joint faces and connections are clean. Plug open connections to prevent contamination.

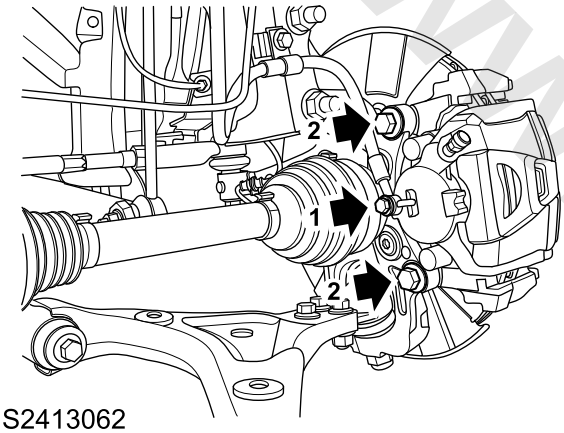

S2413062

5. Remove the front brake caliper stop spring from the front brake caliper housing.
6. Remove 2 dust shields from the bolt of the front brake caliper housing.
7. Remove 2 bolts (1) securing the front brake caliper housing on the front brake caliper bracket.

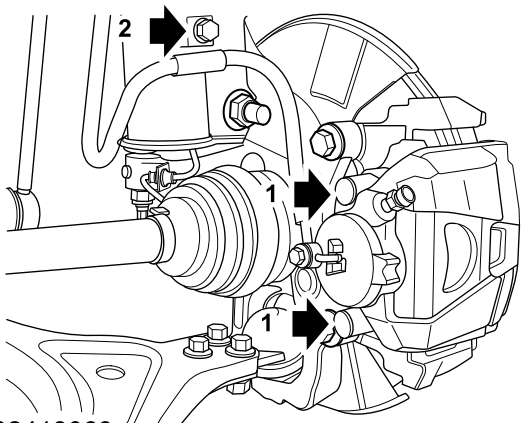

S2413063

8. Remove the brake caliper housing assembly.

Refit

1. Remove all dirts and corrosives from the edge of the front brake disc.
2. Fix the front brake caliper housing to the front brake caliper bracket and align them. Fit 2 bolts, tighten to **25–30Nm** and check the torque.
3. Fit the dust shield to the bolt of the front brake caliper housing.
4. Fit the stop spring clip of the front brake caliper into the front brake caliper housing.
5. Connect the front brake hose to the front brake caliper housing, tighten the connector to **28–32Nm** and check the torque.
6. Bleed the brake system.

☞ **Brake System Bleeding**

7. Fit the wheels.

☞ **Wheel Refit**

8. Lower the vehicle.

www.cargeek.ir

Rear Brake Pad

Remove

1. Release the parking brake cable.

Parking Brake Cable Full Release

2. Raise the vehicle on a lift.
3. Remove wheels.

Wheel Remove

4. Release the clip to remove the EPB cable.

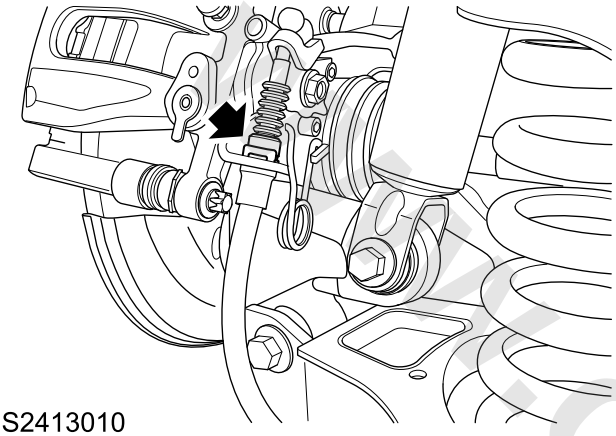

S2413010

5. Remove 2 bolts securing the rear brake caliper housing assembly on the rear brake caliper bracket.

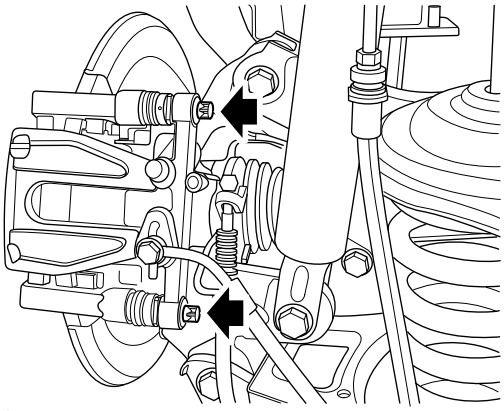

S2413022

6. Fix the rear brake caliper housing assembly to the vehicle frame and avoid damaging the hose and other components.

Caution: Do not tie or allow caliper to hang on brake hose.

7. Remove the rear brake pad from the rear brake caliper housing.

Refit

1. Remove all dirts and corrosives from the edge of the rear brake disc.
2. Clean the rear brake caliper housing and rear brake caliper bracket with brake cleaner.
3. Check the rear brake caliper and rear brake caliper piston seal rings for any damage.
4. With the **TCH00015** and **TCH00105**, press the rear brake caliper piston into the rear brake caliper housing, rotate the piston of the left assembly clockwise and that of the right assembly counterclockwise.

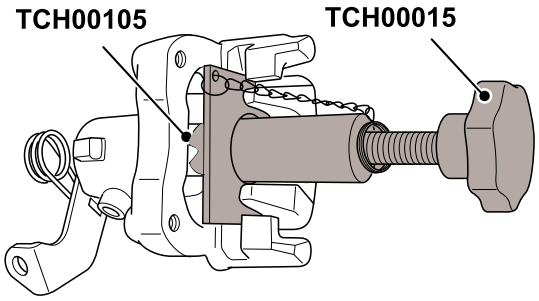

S2413071

5. Fit the brake pad spring to the brake pad, use the direction shown by the figure below.

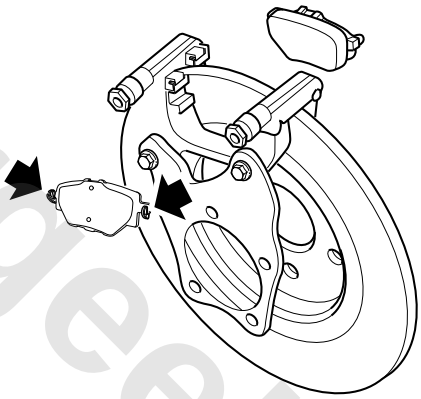

S2413072

6. Fit the brake pad to the rear brake housing assembly.
7. Align the rear brake caliper housing with the rear brake caliper bracket, fit 2 bolts, tighten to **30–33Nm** and check the torque.
8. Fit the stop spring clip rear brake caliper into the rear brake caliper housing.
9. Fit the EPB cable to the rear brake caliper bracket and secure with clips.
10. Fit the wheels.

Wheel Refit

11. Lower the vehicle.
12. Press the brake pedal for several times so as to fit the front brake pad.

Tip: Pedal travel may be longer than normal during first brake applications.

13. Adjust the parking brake cable.

Parking Brake Cable Adjustment

www.cargeek.ir

Rear Brake Disc

Remove

1. Release the parking brake cable.

Parking Brake Cable Full Release

2. Raise the vehicle on a lift.
3. Remove wheels.

Wheel Remove

4. Remove and discard 2 bolts fixing the rear brake caliper assembly to the rear wheel bracket.

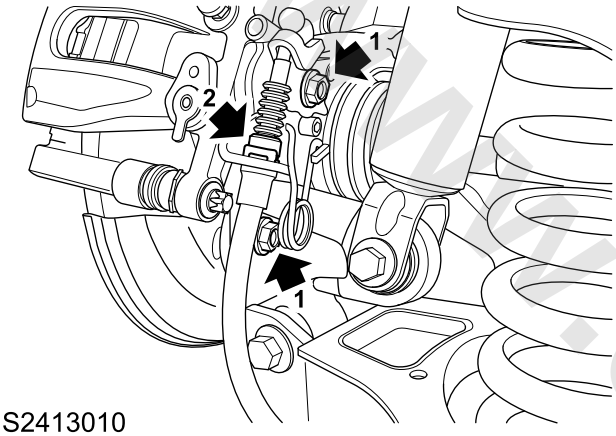

S2413010

5. Secure the rear brake caliper assembly on the frame.
6. Remove the countersunk head screws fixing the rear brake disc to the wheel hub.

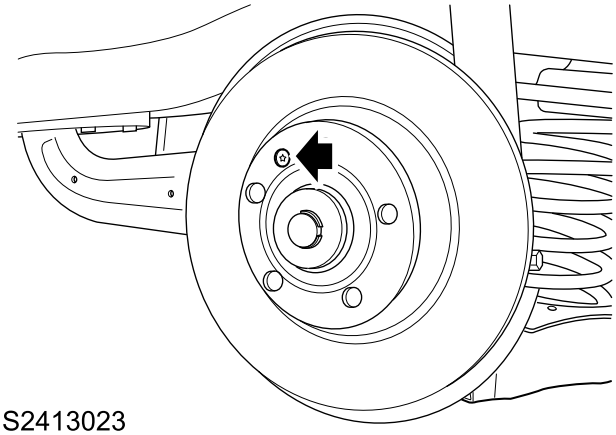

S2413023

7. Remove the rear brake disc from the vehicle.

Refit

1. Keep the mating face between the rear brake disc and the wheel hub clean.
2. Fix the rear brake disc to the wheel hub, fit 1 countersunk head screw, tighten to **7-10Nm** and check the torque.
3. Check the runout of rear brake disc.

Thickness and Circular Runout Check – Rear Brake Disc

4. With the **TCH00015** and **TCH00105**, press the rear brake caliper piston into the rear brake caliper housing, rotate the piston of the left assembly clockwise and that of the right assembly counterclockwise.

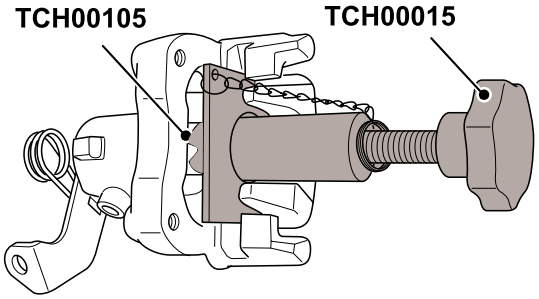

S2413071

5. Check the mounting surface and hole of the wheel bracket and rear brake caliper assembly, remove the foreign material or oil stain and ensure the mounting surface and hole are clean.
6. Fix the rear brake caliper assembly to the rear wheel bracket, fit 2 new bolts and tighten to **55 Nm+30°**.

Caution: The bolt can only be used once, and it should be replaced by a new one after the bolt is screwed (not only screw down but also screw off).

7. Fit the wheels.

Wheel Refit

8. Lower the vehicle.
9. Adjust the parking brake cable.

Parking Brake Cable Adjustment

www.cargeek.ir

www.cargeek.ir

Rear Brake Caliper Housing Assembly

Remove

1. Release the parking brake cable.

☞ **Parking Brake Cable Full Release**

2. Raise the vehicle on a lift.
3. Remove wheels.

☞ **Wheel Remove**

4. Release the clip to remove the EPB cable.

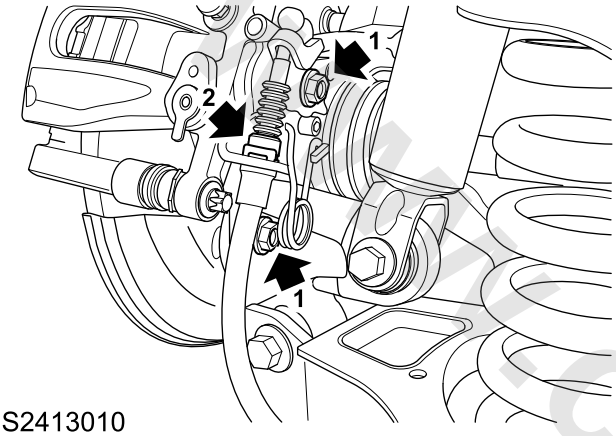

S2413010

5. Remove and discard the bolt and washer (1) securing the brake hose and brake caliper.

Caution: Before disconnecting or removing components, ensure the immediate area around joint faces and connections are clean. Plug open connections to prevent contamination.

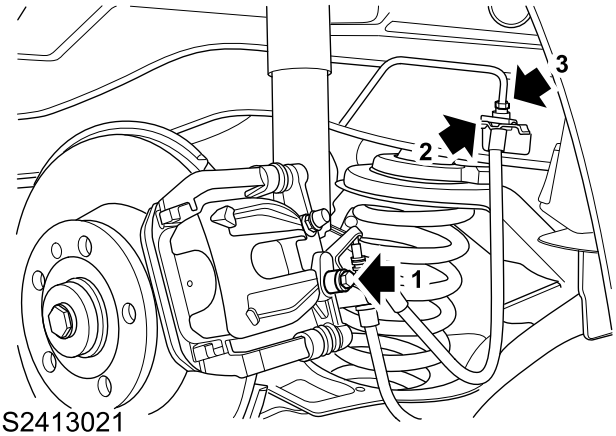

S2413021

6. Remove 2 bolts securing the rear brake caliper housing assembly on the rear brake caliper bracket.

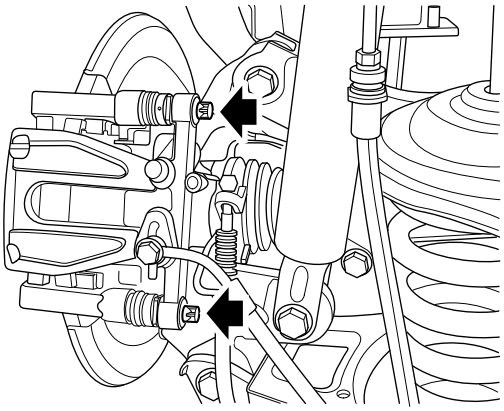

S2413022

7. Remove the rear brake caliper housing assembly from the vehicle.

Refit

1. Clean the brake components.

Warning: Do not use compressed air to clean brake components. Dust from friction materials can be harmful if inhaled.

2. Align the rear brake caliper housing with the rear brake caliper bracket, fit 2 bolts, tighten to **30–33Nm** and check the torque.
3. Fix the rear brake hose to the brake caliper, fit 1 bolt and washers and tighten to **28–32Nm**.
4. Fix the EPB cable to the rear brake caliper bracket and secure with clips.
5. Bleed the brake system.

☞ **Brake System Bleeding**

6. Fit the wheels.

☞ **Wheel Refit**

7. Lower the vehicle.
8. Adjust the parking brake cable.

☞ **Parking Brake Cable Adjustment**

www.cargeek.ir

www.cargeek.ir

Thickness and Circular Runout Check - Rear Brake Disc

Check

1. Raise the vehicle on the lift.

Warning: Do not work on or under a vehicle supported only by a jack. Always support the vehicle on safety stands.

2. Remove wheels.

☞ **Wheel Remove**

3. Remove 2 bolts fixing the rear brake caliper assembly to the rear steering knuckle, remove the rear brake caliper assembly and put it aside.

Caution: Don't tie brake caliper on brake hose.

4. Measure the thickness of the rear brake disc along the four average points at the surface of the rear brake disc with differential gauge/micrometer, and the measurement points are inward, 10mm away from the margin of the rear brake disc. The thickness of the rear brake disc shall be at least 10.0mm. If it exceeds the limit, the rear brake disc must be replaced.

Caution: Brake discs must be renewed in pairs, unless one disc requires renewal before 1000 miles (1500 km) from new.

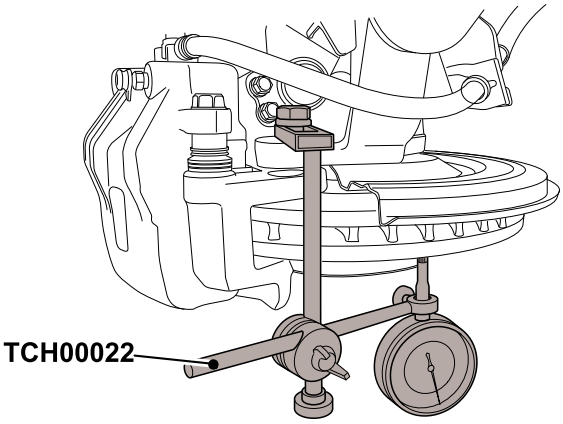

S420038

5. Fit the dial indicator (**DTI**) to the **TCH00022**, and fix the **TCH00022** to the inside of the rear wheel hub through the bolt hole of the rear brake caliper assembly.
6. Fix the probe of the **DTI** to the location inward, 10mm away from the margin of the rear brake disc.
7. Fit the wheels.

☞ **Wheel Refit**

8. Reset the **DTI**, turn the wheel for a full circle and measure the runout of the rear brake disc. The runout of the rear brake disc shall not exceed 0.025mm.
9. If the runout of the rear brake disc exceeds limits:
   a. Remove wheels.
   b. Remove the countersunk head screws fixing the rear brake disc to the rear wheel hub and take down the rear brake disc.
   c. Ensure cleanness of the mating face between the rear brake disc and the rear wheel hub flange.
   d. Fit the rear brake disc into the rear wheel hub, fit the countersunk head screw and tighten to **7-10Nm**.
   e. Fit the wheels.
   f. Recheck the runout of the rear brake disc according to the above detailed procedures.
   g. If the runout still exceeds the limit, replace the rear brake disc or rear wheel hub.
10. Remove wheels.

☞ **Wheel Remove**

11. Remove the **DTI** and **TCH00022** from the inside of the rear wheel hub.
12. Fit the rear brake caliper assembly into the trailing arm, fit the bolt, tighten to **55 Nm+30°** and check the torque.
13. Fit the wheels.

☞ **Wheel Refit**

14. Depress the brake pedal for several times so as to adjust the rear brake pad.
15. Lower the vehicle.

www.cargeek.ir

Thickness and Circular Runout Check - Front Brake Disc

Check

1. Raise the vehicle on a lift.

Warning: Do not work on or under a vehicle supported only by a jack. Always support the vehicle on safety stands.

2. Remove wheels.

Wheel Remove

3. Remove 2 bolts fixing the front brake caliper assembly to the front wheel hub, remove the front brake caliper assembly and secure it on the frame.
4. Measure the thickness of the front brake disc along the four average points at the surface of the front brake disc with differential gauge/micrometer, and the measurement points are inward, 10mm away from the margin of the front brake disc. The thickness of the front brake disc shall be at least 23.0mm. If it exceeds the limit, the front brake disc must be replaced.

Caution: Brake discs must be renewed in pairs, unless one disc requires renewal before 1000 miles (1500 km) from new.

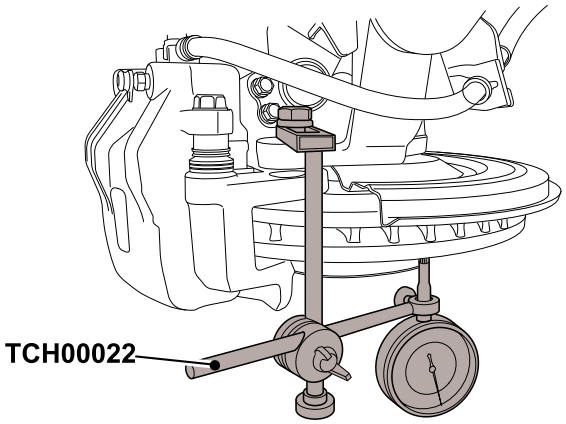

S420038

5. Fit the dial indicator (**DTI**) to the special tool, and fix it to the inside of the front wheel hub through the bolt hole of the front brake caliper assembly.
6. Fix the probe of the **DTI** to the location inward, 5mm away from the edge of the front brake disc.
7. Fit the wheels.

Wheel Refit

8. Reset the **DTI**, allow the wheel to turn for a full circle and measure the brake disc runout. The runout of the front brake disc shall not exceed 0.025mm.
9. If the brake disc runout exceeds the limit:
   a. Remove wheels.
   b. Remove the countersunk head screws fixing the front brake disc to the front wheel hub and remove the front brake disc.
   c. Ensure the cleanness of the mating surface between the front brake disc and the front wheel hub flange.
   d. Fit the front brake disc to the front wheel hub, fit the countersunk head screw, tighten to **7–10Nm** and check the torque.
   e. Fit the wheels.
   f. Recheck the runout of the brake disc according to the above procedures.
   g. If the runout still exceeds the limit, replace the front brake disc or front wheel hub.
10. Remove wheels.

Wheel Remove

11. Remove the **DTI** and special tool from the inside of the front wheel hub.
12. Fit the brake caliper assembly to the front steering knuckle, fit 2 bolts, tighten to **190–210Nm** and check the torque.
13. Fit the wheels.
14. Depress the brake pedal for several times to adjust the front brake pad.
15. Lower the vehicle.

www.cargeek.ir

www.cargeek.ir

Pedal Assembly-MT

Remove

1. Disconnect battery earth lead.
2. Remove the driver side lower cover plate assembly.

☞ **Driver Side Lower Trim Panel Assembly Remove**

3. Disconnect the accelerator pedal assembly connector (1).
4. Remove 3 nuts (2) fixing the accelerator pedal to the front dash panel.

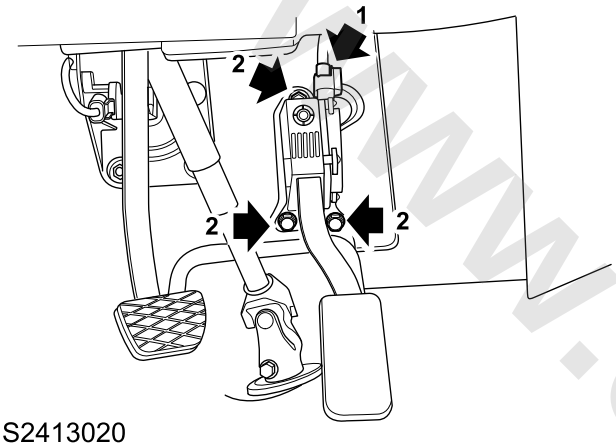

S2413020

5. Remove the accelerator pedal assembly from the vehicle.
6. Remove the clips and rod pins fixing the vacuum booster to the brake pedal.

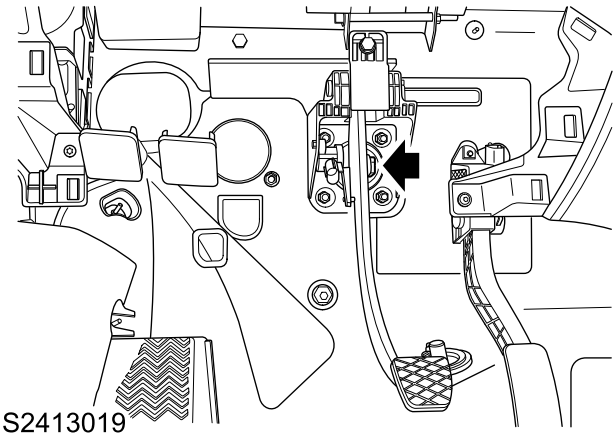

S2413019

7. Remove 4 nuts (1) fixing the break pedal to the body dash panel.
8. Remove 1 bolt (2) fixing the break pedal to the body dash panel.

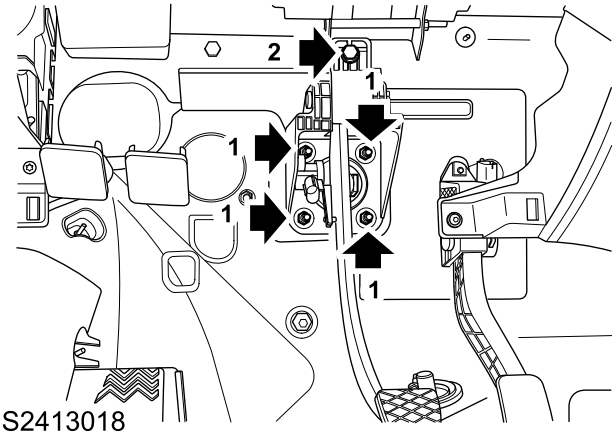

S2413018

9. Remove the brake pedal assembly from the vehicle.
10. Remove the clutch master cylinder and clutch pedal assembly.

☞ **Clutch Master Cylinder Remove**

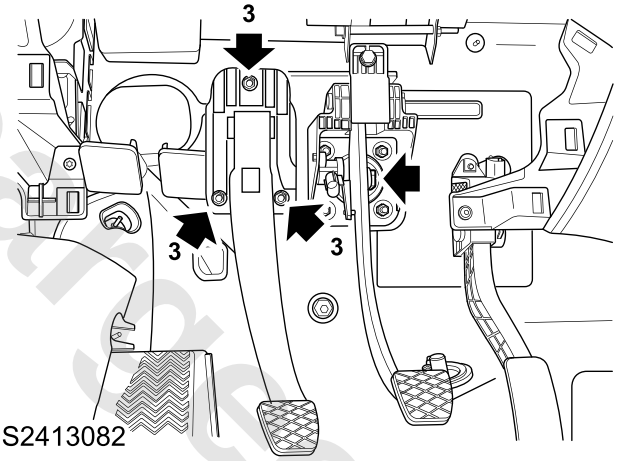

S2413082

11. Disconnect the clutch pedal from the master cylinder, and remove the clutch pedal assembly.

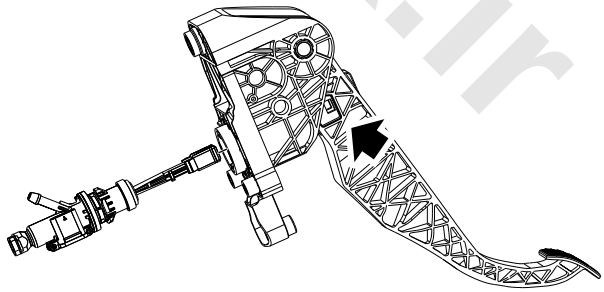

S2413081

Refit

1. Connect the clutch master cylinder and clutch pedal assembly.
2. Fit the clutch master cylinder and clutch pedal assembly to the vehicles, fit 3 bolts and tighten to **19–25Nm**.

☞ **Clutch Master Cylinder Refit**

www.cargeek.ir

3. Fit the brake pedal to the vehicle.
4. Fix the brake pedal assembly to the body front dash panel, then fit 1 bolts and tighten them to **19–25Nm**.
5. Fix the brake pedal assembly to the body front dash panel, then fit 4 nuts and tighten them to **19–25Nm**.
6. Fix the vacuum booster push rod to the brake pedal, fit rod pin and tighten it with clips.
7. Fit the accelerator pedal to the vehicle.
8. Fix the accelerator pedal assembly to the front dash panel, then fit 3 nuts and tighten them to **19–25Nm**.
9. Connect the accelerator pedal assembly connector.
10. Fit the lower cover plate assembly at the driver side.

Driver Side Lower Trim Panel Assembly Refit

11. Connect battery earth lead.

Pedal Assembly - AT

Remove

1. Disconnect battery earth lead.
2. Remove the driver side lower cover plate assembly.

Driver Side Lower Cover Plate Assembly Remove

3. Remove the brake pedal position sensor.

Brake Pedal Position Sensor Remove

4. Disconnect the connector (1) of the accelerator pedal assembly.
5. Remove 3 nuts (2) fixing the accelerator pedal assembly to the dash panel.

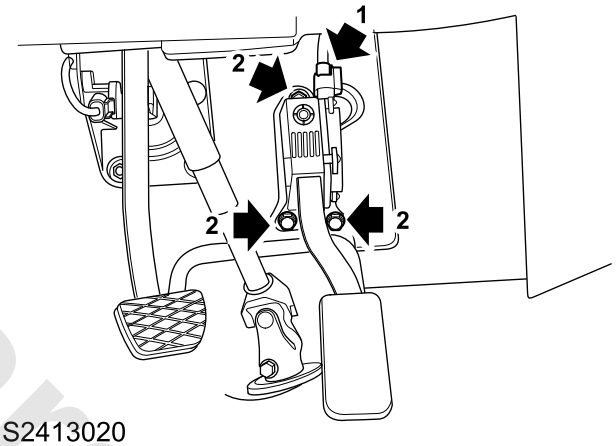

S2413020

6. Remove the accelerator pedal assembly from the vehicle.
7. Remove the rod pin and clip fixing the vacuum booster to the brake pedal.

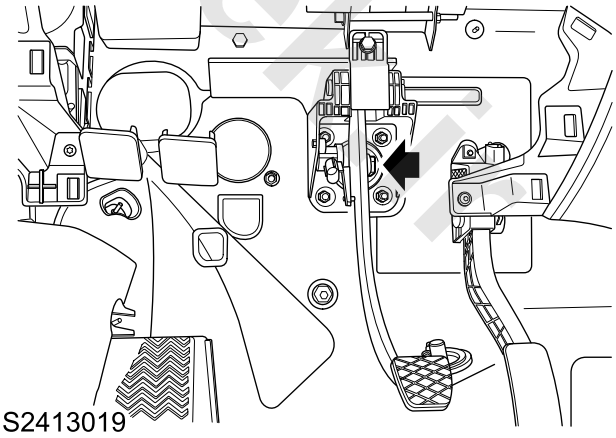

S2413019

8. Remove 4 nuts (1) fixing the brake pedal to the dash panel of the body.
9. Remove 1 bolt (2) fixing the brake pedal to the dash panel of the body.

www.cargeek.ir

www.cargeek.ir

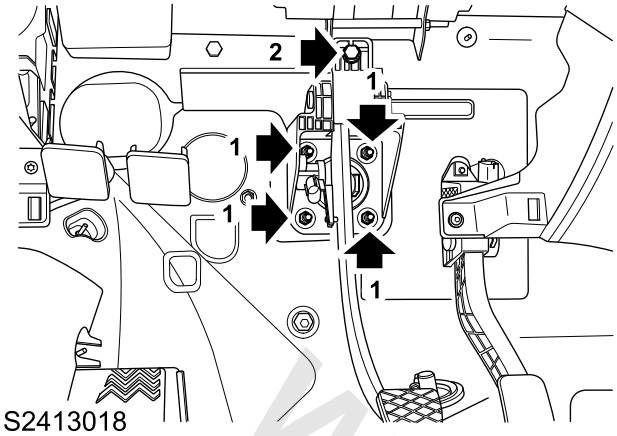

10. Remove the brake pedal assembly from the vehicle.

Refit

1. Fit the brake pedal to the vehicle.
2. Fix the brake pedal assembly to the dash panel of the body, fit 1 bolt and tighten to **19–25Nm**.
3. Fix the brake pedal assembly to the dash panel of the body, fit 4 nuts and tighten to **19–25Nm**.
4. Secure the vacuum booster to the brake pedal, and secure it with the rod pin and clip.
5. Fit the accelerator pedal to the vehicle.
6. Fix the accelerate pedal assembly to the dash panel, fit 3 nuts and tighten to **19–25Nm**.
7. Connect the connector of the accelerator pedal assembly.
8. Fit the brake pedal position sensor.

Brake Pedal Position Sensor Refit

9. Fit the lower cover plate assembly for the driver side.

Driver Side Lower Cover Plate Assembly Refit

Brake Pedal Position Sensor

Remove

1. Disconnect battery earth lead.
2. Remove the driver side lower cover plate assembly.

Driver Side Lower Cover Plate Assembly Remove

3. Disconnect the connector (2) of the brake pedal position sensor.
4. Remove 1 bolt (1) fixing the brake pedal position sensor to the pedal bracket.

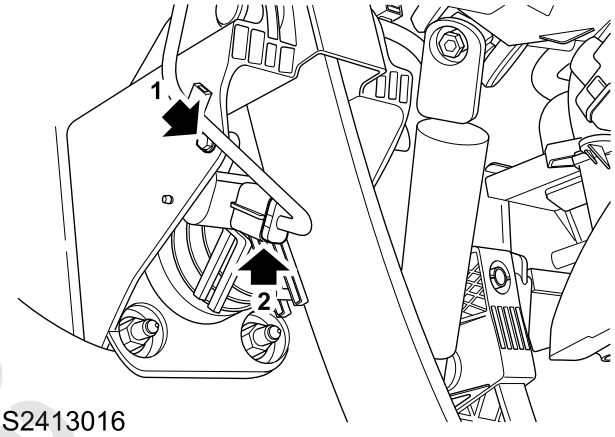

5. Remove the brake pedal position sensor.

Refit

1. Fit the brake pedal position sensor to the vehicle.
2. Fix the brake pedal position sensor to the pedal bracket, fit 1 bolt, tighten to **7–10Nm** and check the torque.
3. Connect the connector of the brake pedal position sensor.
4. Fit the lower cover plate assembly for the driver side.

Driver Side Lower Cover Plate Assembly Refit

5. Connect battery earth lead.
6. Perform zero self-learning for the brake pedal position sensor.

Self-learning and Adjustment, Programming and Coding - Zero Self-learning of Brake Pedal Position Sensor

www.cargeek.ir

Vacuum Booster Assembly

Remove

1. Disconnect battery earth lead.
2. Remove the battery box bracket.

Battery Box Bracket Remove

3. Remove the brake master cylinder and fluid reservoir assembly.

Brake Master Cylinder and Fluid Reservoir Assembly Remove

4. Disconnect the vacuum sensor connector (1) of the vacuum pump.
5. Disconnect the vacuum hose (2) from the vacuum booster.

Caution: The force to remove the hose shouldn't too heavy to damage the connector of vacuum hose.Do not damage the connector and keep the connector away from water when removing or fixing the hose with vacuum sensor.

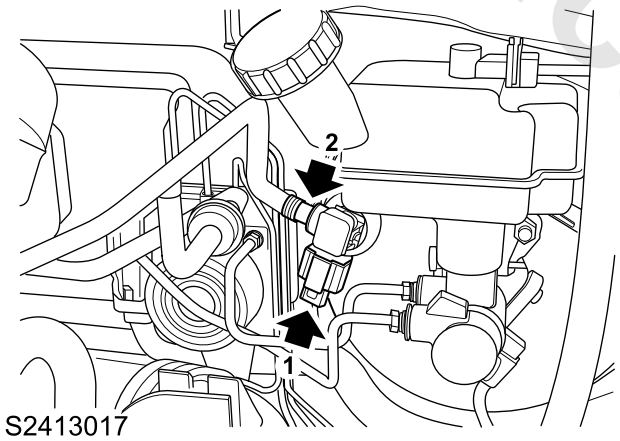

6. Remove the driver side lower cover plate assembly.

Driver Side Lower Cover Plate Assembly Remove

7. Remove the pin rod and clip fixing the vacuum booster to the brake pedal.

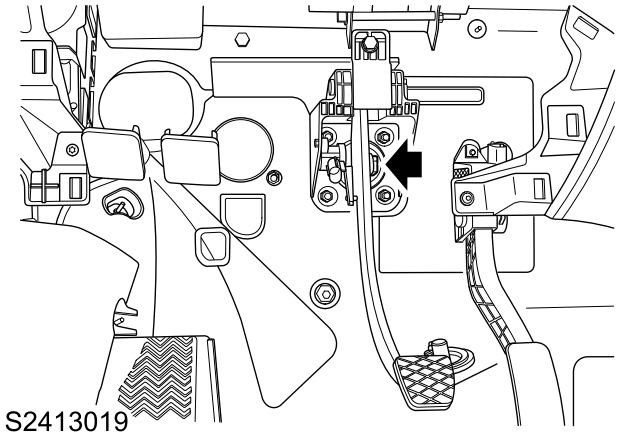

8. Remove 4 nuts (1) fixing the vacuum booster to the lower dash panel.

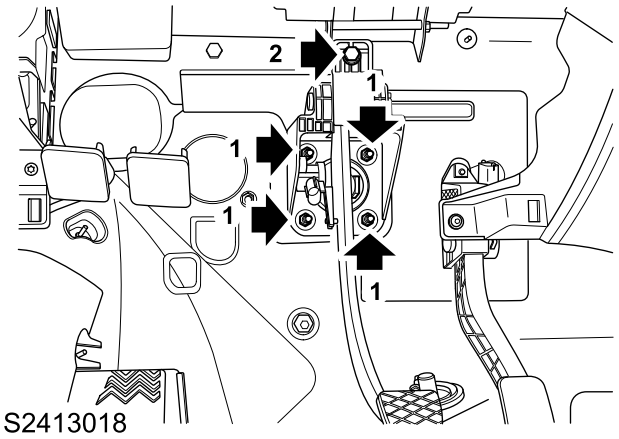

9. Remove the vacuum booster assembly from the vehicle.

Refit

1. Fit the vacuum booster assembly to the vehicle.
2. Fix the vacuum booster to the lower dash panel, fit 4 nuts and tighten them to **19–25Nm**.
3. Locate the push rod of the vacuum booster to the brake pedal, and secure it with the rod pin and clip.
4. Fit the lower cover plate assembly for the driver side.

Driver Side Lower Cover Plate Assembly Refit

5. Connect vacuum hose to the vacuum booster.

Caution: Keep the dust and foreign matter from vacuum hose.If having trouble to fix vacuum hose , please using grease special for fixing vacuum hose to lubricate , other liquid or grease is prohibited.

6. Connect the vacuum sensor connector of the vacuum booster.
7. Fit the brake master cylinder and fluid reservoir assembly.

Brake Master Cylinder and Reservoir Assembly Refit

8. Bleed the brake system.

Brake System Bleeding

9. Fit the battery box bracket.

Battery Box Bracket Refit

10. Connect battery earth lead.

www.cargeek.ir

Brake Lamp Signal Sensor

Remove

1. Disconnect battery earth lead.
2. Disconnect the connector (2) of the brake signal sensor.

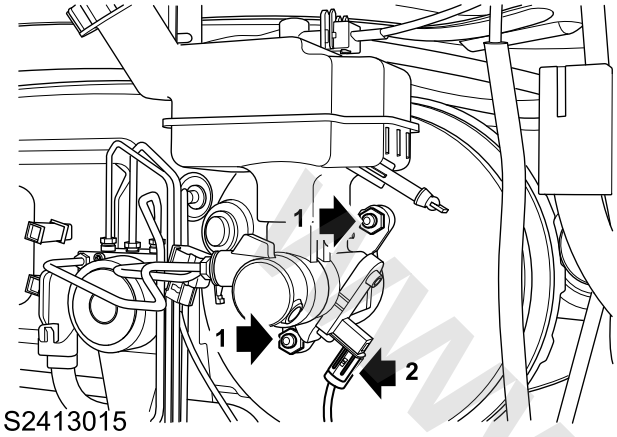

3. Remove the clips and bolts fixing the brake lamp signal sensor to the brake master cylinder, and remove the lock catches.

Refit

1. Fix the Brake Lamp Signal Sensor to the brake master cylinder with clips, fit bolts and tighten them.
2. Connect the connector of the brake signal sensor.
3. Connect battery earth lead.

Brake Lamp Switch Assembly

Remove

1. Disconnect battery earth lead.
2. Disconnect the brake lamp switch connector.
3. Release the clip fixing the brake lamp switch to the brake pedal bracket, an remove the brake lamp switch.

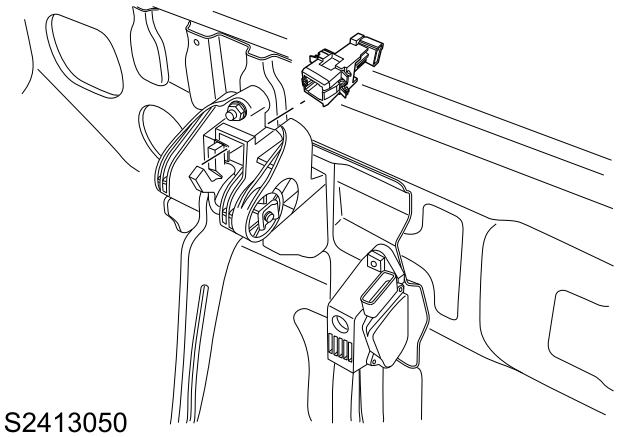

Refit

1. Fix the brake lamp switch to the brake pedal bracket and secure the clip.
2. Connect the connector of the brake lamp switch.
3. Connect battery earth lead.

www.cargeek.ir

www.cargeek.ir

www.cargeek.ir

Brake System Bleeding

Brake System Bleeding

1. Refill the brake fluid reservoir to the MAX mark.

Caution: During the entire bleeding process, ensure the new brake fluid level in the brake reservoir is between the Min. and Max. position.

2. Raise the vehicle on a lift.
3. Remove the bleed screw dust cover at the right rear brake caliper, and fit the hose into the bleed screw. Immerse the free end of the hose into the container with fresh brake fluid.

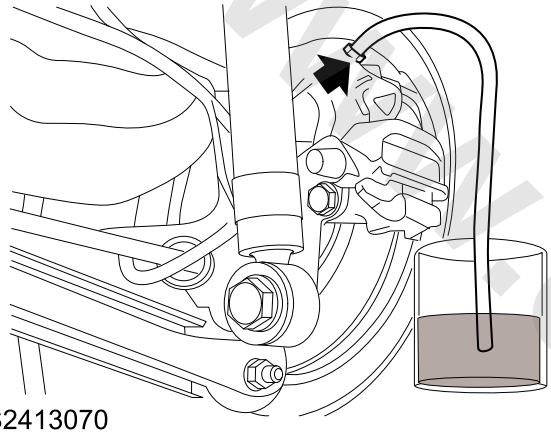

S2413070

4. Depress the brake pedal for several times and apply stable pressure.
5. Release the bleed screw to separate the brake fluid and air. Allow the pedal to return without any external force.
6. Press the brake pedal to the maximum stroke steadily, and allow it to return without any external force. Repeat the operation for several times until the brake fluid without any air flows into the container, then fix the brake pedal to the maximum stroke, tighten the front bleed screw to **16-18Nm** and the rear bleed screw to **9-13Nm**, then check the torque.
7. Remove the hose from the bleed screw, fit the bleed screw dust cover.
8. Repeat the draining procedures for the remaining 3 brake calipers in the following order: left rear, left front, right front.

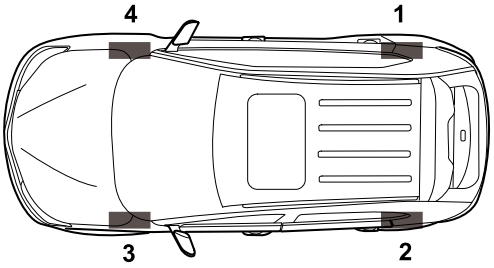

S2413026

9. Lower the vehicle.
10. Refill the brake fluid reservoir to the MAX line.
11. Apply the brake and check for leakage.
12. Test the vehicle on the road. Check the minimum stroke of the brake pedal when the brake is functioning.

VDS Bleeding

1. Place the ignition switch in "RUN" position (2).
2. Connect the brake fluid filling/bleeding machine to the brake fluid reservoir and adjust the refill pressure to 2Bar.
3. Connect diagnostic tool and access the **VDS**.
4. Select "Routines - Other - **ABS**/**SCS** Brake Bleeding", and operate as per the instructions on the screen.
5. If the operation fails, please operate as per the instructions on the screen.

www.cargeek.ir

Brake Master Cylinder and Reservoir Assembly

Remove

1. Disconnect battery earth lead.
2. Remove the battery box bracket.

☞ **Battery Box Bracket Remove**

3. Put the cloth under the brake master cylinder and brake fluid reservoir assembly to absorb the spilled fluid.

Caution: Brake fluid will damage paint finished surfaces. If spilled, immediately remove fluid and clean area with water.

4. Disconnect the connector from the brake fluid level switch.

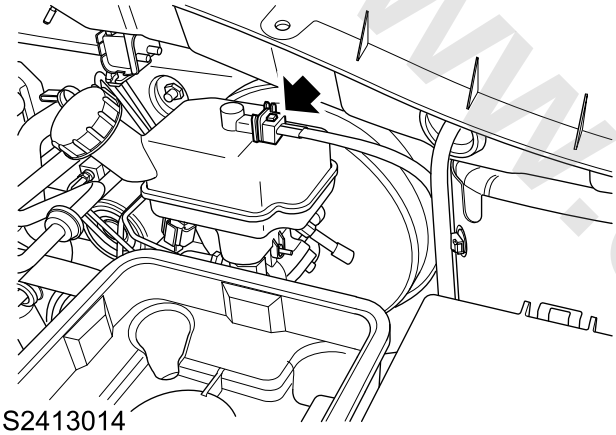

S2413014

5. Release 2 hard brake pipes from the brake master cylinder.

Caution: Before disconnecting or removing components, ensure the immediate area around joint faces and connections are clean. Plug open connections to prevent contamination.

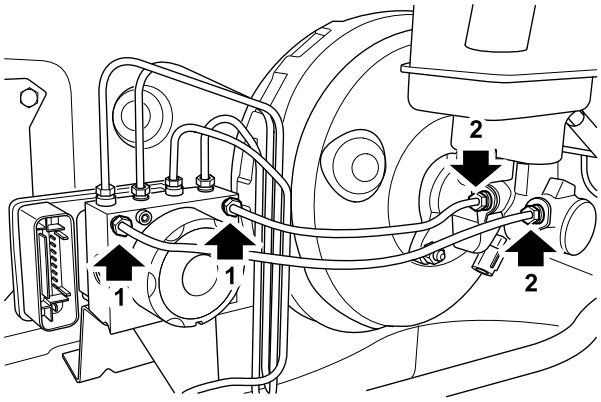

S2413004

6. Disconnect the connector (2) of the signal sensor of the brake lamp (if any).
7. Remove 2 nuts and gasket (1) securing the brake master cylinder on the vacuum booster.

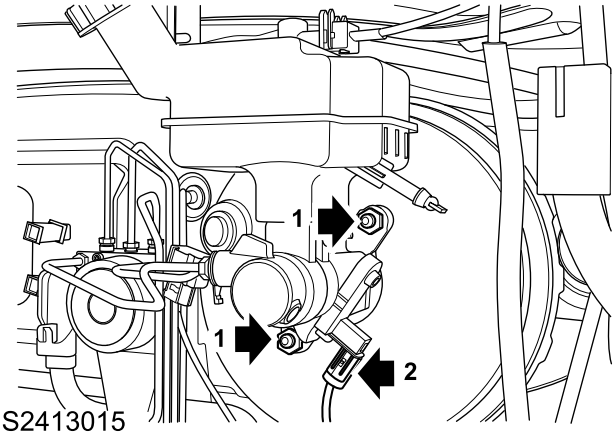

S2413015

8. Remove the brake master cylinder and fluid reservoir assembly.
9. Remove 1 bolt fixing brake fluid reservoir to the brake master cylinder, and remove the reservoir.

Refit

1. Fix the brake fluid reservoir to the master cylinder, fit 1 bolt, tighten to **5–7Nm**, and check the torque.
2. Fit the brake master cylinder and reservoir assembly to the vehicle.
3. Clean the hard brake pipe connector.
4. Fix the brake master cylinder to the vacuum booster, fit 2 new nuts and gaskets, tighten to **19–25Nm** and check the torque.
5. Fit the 2 hard brake pipes to the brake master cylinder, tighten the connector nut to **15-19Nm** and check the torque.
6. Connect the signal sensor connector of the brake lamp (if any).
7. Connect the connector of the brake fluid level switch.
8. Fit the battery box bracket.

☞ **Battery Box Bracket Refit**

9. Bleed the brake system.

☞ **Brake System Bleeding**

10. Connect battery earth lead.

www.cargeek.ir

www.cargeek.ir

Front Brake Hose

Remove

1. Raise the vehicle on a lift.
2. Remove wheels.

Wheel Remove

3. Remove 1 bolt and washer fixing the brake hose to the front brake caliper housing, and discard the bolt and washer.

Caution: Before disconnecting or removing components, ensure the immediate area around joint faces and connections are clean. Plug open connections to prevent contamination.

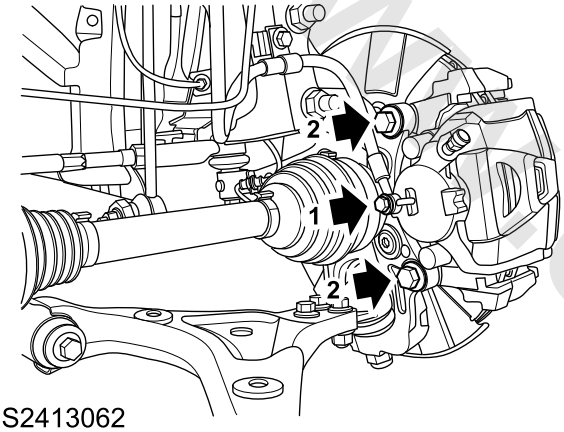

S2413062

4. Remove the clip (1) fixing the front brake hose to the body.
5. Remove the nut (2) connecting the brake hose and brake pipe.

Caution: Before disconnecting or removing components, ensure the immediate area around joint faces and connections are clean. Plug open connections to prevent contamination.

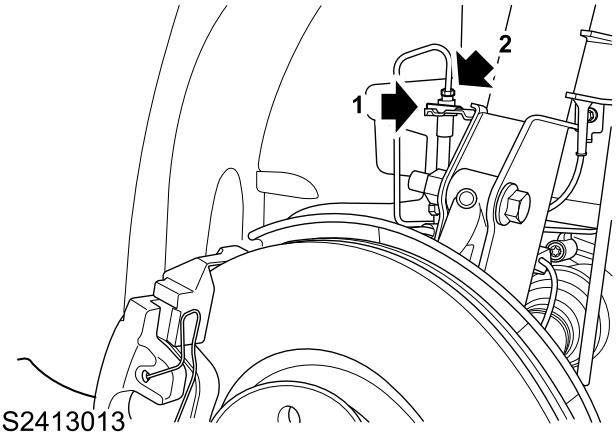

S2413013

6. Remove 1 bolt fixing the front brake hose and its bracket to the front shock absorber.

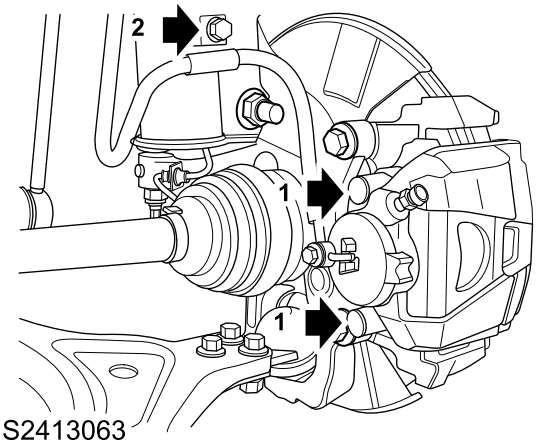

S2413063

7. Remove the front brake hose from the vehicle.

Refit

1. Clean the connector of the brake pipe.
2. Fit the front brake hose to the vehicle.
3. Fix the front brake hose and its bracket to the front shock absorber, fit 1 bolt and tighten it.
4. Connect the front brake hose to the brake pipe, secure with nuts and tighten the nut to **15-19Nm**.
5. Fix the front brake hose to the body and secure with clips.
6. Fix the front brake hose to the front brake caliper housing, fit new bolts and washers and then tighten the bolt to **28–32Nm**.
7. Bleed the brake system.

Brake System Bleeding

8. Fit the wheels.

Wheel Refit

9. Lower the vehicle.

www.cargeek.ir

Rear Brake Hose

Remove

1. Raise the vehicle on a lift.
2. Remove wheels.

☞ **Wheel Remove**

3. Remove 1 bolt and washer (1) fixing the rear brake hose to the rear brake caliper housing, and discard the bolt and washer.

Caution: Before disconnecting or removing components, ensure the immediate area around joint faces and connections are clean. Plug open connections to prevent contamination.

4. Remove the clip (2) fixing the rear brake hose to the body.
5. Remove the nut (3) connecting the rear brake hose and brake pipe, and disconnect them.

Caution: Before disconnecting or removing components, ensure the immediate area around joint faces and connections are clean. Plug open connections to prevent contamination.

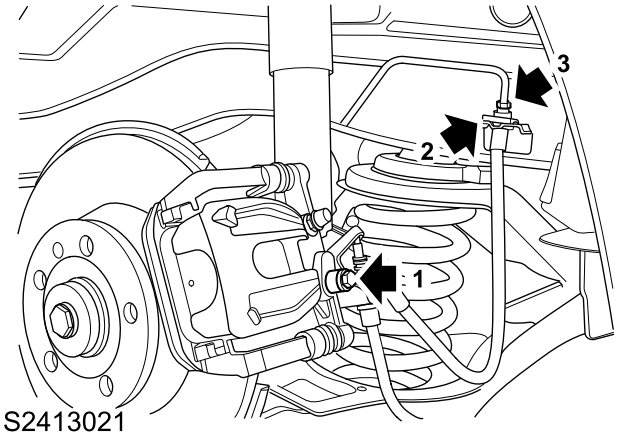

6. Remove the rear brake hose from the vehicle.

Refit

1. Clean the brake components.
2. Fit the rear brake hose to the vehicle.
3. Connect the rear brake hose to the brake pipe, secure with nuts and tighten the nut to **15-19Nm**.
4. Fix the rear brake hose to the body and secure with clips.
5. Fix the rear brake hose to the rear brake caliper housing, fit new bolts and washers and then tighten the bolt to **28–32Nm**.
6. Bleed the brake system.

☞ **Brake System Bleeding**

7. Fit the wheels.

☞ **Wheel Refit**

8. Lower the vehicle.

www.cargeek.ir

www.cargeek.ir

Left Front Brake Pipe

Remove

1. Raise the vehicle on a lift.
2. Remove wheels.

Wheel Remove

3. Put a cloth under the **ABS** modulator to absorb the spilled oil.
4. Remove the nut (2) fixing the left front brake pipe to the **ABS** modulator, and disconnect the pipe.

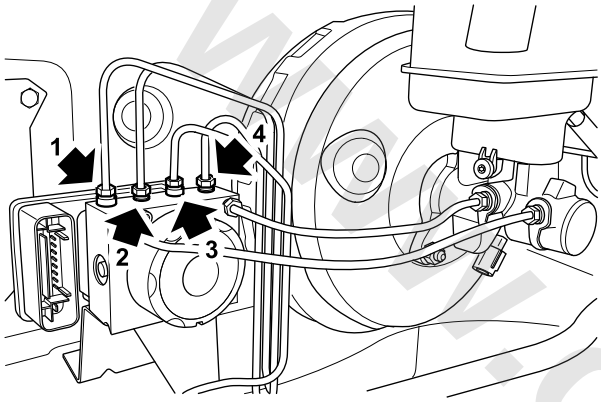

S2413005

5. Remove the nut connecting the brake hose and brake pipe.

Caution: Before disconnecting or removing components, ensure the immediate area around joint faces and connections are clean. Plug open connections to prevent contamination.

6. Remove the clip fixing the front brake hose to the body.

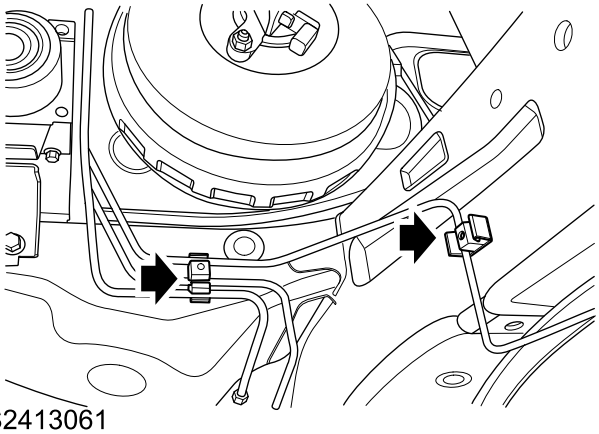

S2413061

7. Remove the left front brake pipe from the vehicle.

Refit

1. Fit the left front brake pipe to the body pipe clip.
2. Connect the left front brake hose to the brake pipe, secure with nuts and tighten the nut to **15-19Nm**.
3. Fix the left front brake hose to the body and secure with clips.
4. Fix the left front brake pipe to the **ABS** modulator, and tighten the nuts to **15-19Nm**.
5. Bleed the brake system.

Brake System Bledding

6. Fit the wheels.

Wheel Refit

7. Lower the vehicle.

www.cargeek.ir

Right Front Brake Pipe

Remove

1. Raise the vehicle on a lift.
2. Remove wheels.

☞ **Wheel Remove**

3. Put a cloth under the **ABS** modulator to absorb the spilled oil.
4. Remove the nut (3) fixing the right front hard brake pipe to the **ABS** modulator, and disconnect the pipe.

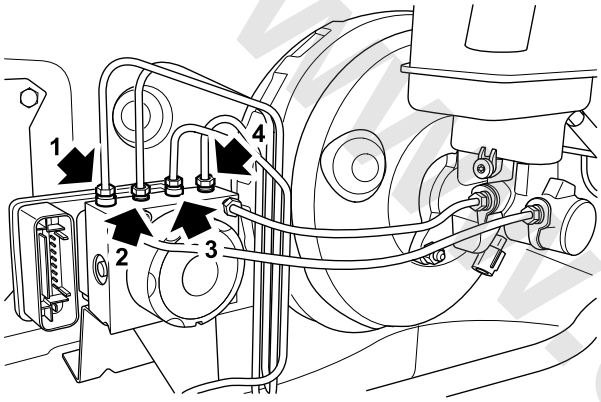

S2413005

5. Remove the nut (2) connecting the right front brake hose and brake pipe.

Caution: Before disconnecting or removing components, ensure the immediate area around joint faces and connections are clean. Plug open connections to prevent contamination.

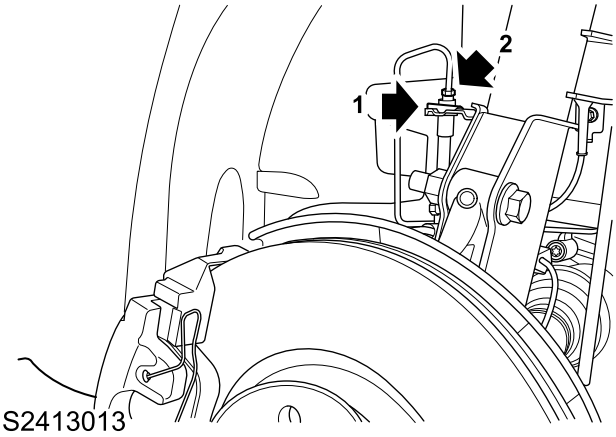

S2413013

6. Remove the clip fixing the right front brake hose to the body.

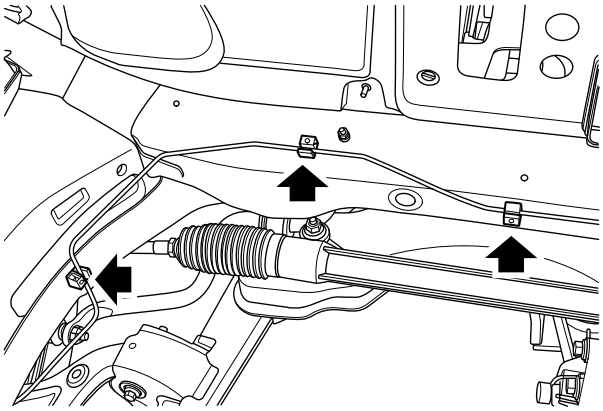

S2413060

7. Remove the right front brake pipe from the body.

Refit

1. Fit the right front brake pipe to the body pipe clip.
2. Connect the right front brake hose to the brake pipe, secure with nuts and tighten the nut to **15-19Nm**.
3. Fix the right front brake hose to the body and secure with clips.
4. Fix the right front brake pipe to the **ABS** modulator, and tighten the nuts to **15-19Nm**.
5. Bleed the brake system.

☞ **Brake System Bleeding**

6. Fit the wheels.

☞ **Wheel Refit**

7. Lower the vehicle.

www.cargeek.ir

Brake Master Cylinder Pipe

Remove

1. Put a cloth under the **ABS** modulator and master cylinder to absorb the spilled oil.
2. Disconnect 2 oil inlet brake pipes (1) from the **ABS** modulator.
3. Disconnect 2 oil outlet brake pipes (2) from the master cylinder.

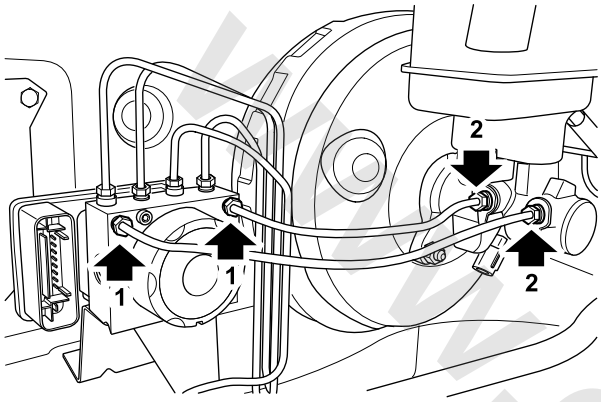

S2413004

Refit

1. Fix the brake pipe to the brake master cylinder, and tighten the nuts to **15-19Nm**.
2. Fix the brake hard tube to the **ABS** modulator, and tighten the nuts to **15-19Nm**.
3. Bleed the brake system.

☞ **Brake System Bleeding**

Connecting Pipe from ABS to Rear Brake Hard Tube

Remove

1. Raise the vehicle on a lift.
2. Put a cloth under the **ABS** modulator to absorb the spilled oil.
3. Remove the 2 nuts (1) and (4) fixing the pipe connecting the **ABS** with the rear hard brake pipe to the **ABS** modulator.
4. Disconnect the brake hose, plug the opening of the brake caliper and the brake hose to avoid brake fluid loss and contamination.

Caution: Before disconnecting or removing components, ensure the immediate area around joint faces and connections are clean. Plug open connections to prevent contamination.

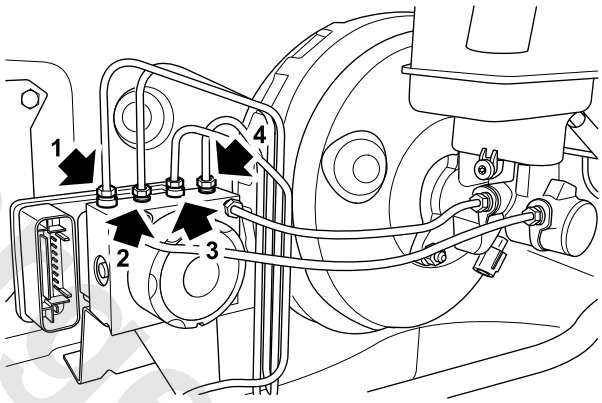

S2413005

5. Remove the pipe connecting the **ABS** to the rear brake pipe and the nut of the rear brake pipe.

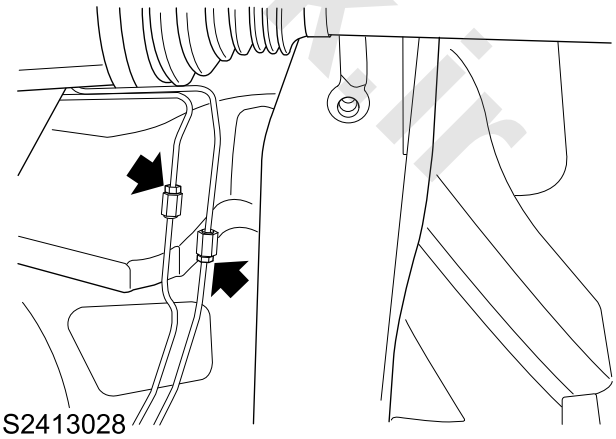

S2413028

6. Disconnect the brake hose, plug the opening of the brake caliper and the brake hose to avoid brake fluid loss and contamination.

Caution: Before disconnecting or removing components, ensure the immediate area around joint faces and connections are clean. Plug open connections to prevent contamination.

www.cargeek.ir

www.cargeek.ir

7. Remove the pipe connecting the **ABS** and the rear brake pipe from the vehicle.

Refit

1. Clean the connector of the brake pipe.
2. Remove the pipe connecting the **ABS** to the rear brake pipe, and fit it to the vehicle.
3. Connect the pipe connecting the **ABS** to the rear brake pipe, and tighten the nuts to **15-19Nm**.
4. Fix the pipe connecting the **ABS** with the rear hard brake pipe to the **ABS** modulator, and tighten the nuts to **15-19Nm**.
5. Bleed the brake system.

Brake System Bleeding

6. Lower the vehicle.

Rear Brake Line

Remove

1. Raise the vehicle on a lift.
2. Remove wheels.

Wheel Remove

3. Remove the pipe connecting the **ABS** to the rear brake pipe and the nut of the rear brake pipe.

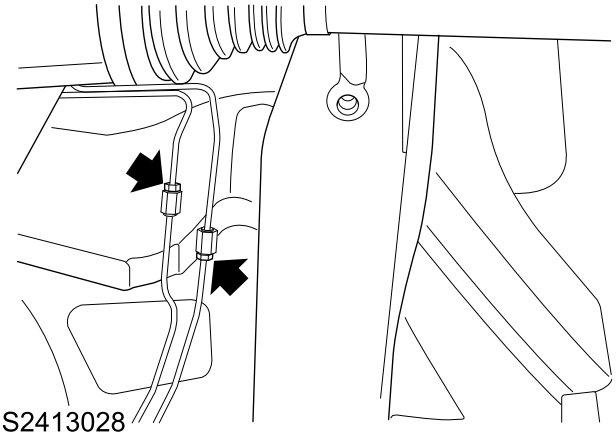

4. Disconnect the brake hose, plug the opening of the brake hose to avoid brake fluid loss and contamination.

Caution: Before disconnecting or removing components, ensure the immediate area around joint faces and connections are clean. Plug open connections to prevent contamination.

5. Disconnect the connector of the fuel filter inlet/outlet pipe from the fuel filter.

Caution: Always fit plugs to open connections to prevent contamination.

Warning: The spilling of fuel is unavoidable during this operation. Ensure that all necessary precautions are taken to prevent fire and explosion.

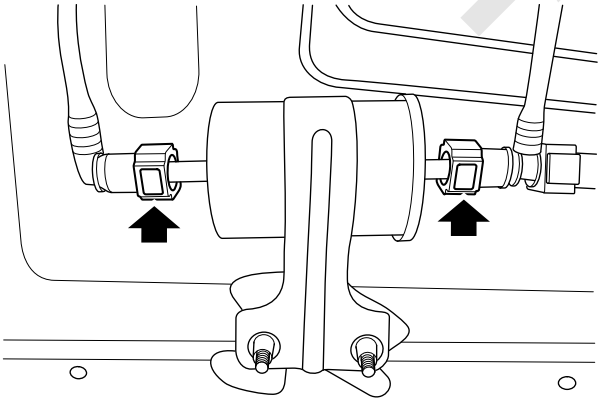

6. Disconnect the oil return pipe.
7. Remove the rear subframe assembly.

Rear Subframe Assembly Remove

www.cargeek.ir

www.cargeek.ir

8. Remove the nut (3) connecting the left rear brake hose with the brake pipe, and disconnect them.

Caution: Before disconnecting or removing components, ensure the immediate area around joint faces and connections are clean. Plug open connections to prevent contamination.

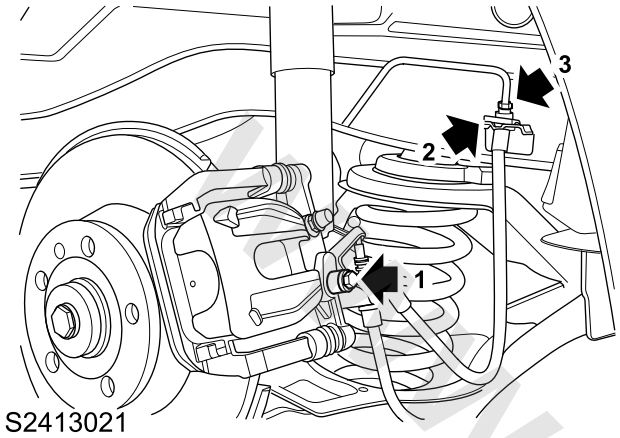

9. Remove the nut connecting the right rear brake hose with the brake pipe, and disconnect them.

Caution: Before disconnecting or removing components, ensure the immediate area around joint faces and connections are clean. Plug open connections to prevent contamination.

10. Remove the rear brake pipe from the body pipe clip.

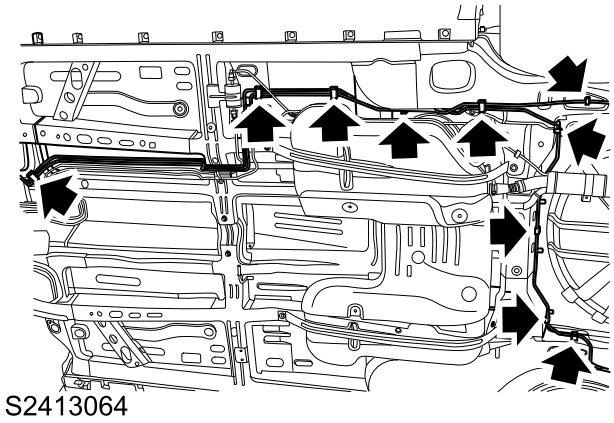

Refit

1. Clean the connector of the brake pipe.
2. Fix the rear brake pipe to the body pipe clip.
3. Connect the right rear brake hose with the brake pipe, fit the nut and tighten to **15-19Nm**.
4. Connect the left rear brake hose with the brake pipe, fit the nut and tighten to **15-19Nm**.
5. Fit the rear subframe assembly.

☞ **Rear Subframe Assembly Refit**

6. Connect the oil return pipe.
7. Connect the connector of the oil inlet/return pipes to the fuel filter.
8. Connect the pipe connecting the **ABS** to the rear brake pipe, fit the nut and tighten to **13–15Nm**.
9. Fit the wheels.

☞ **Wheel Refit**

10. Lower the vehicle.
11. Bleed the brake system.

☞ **Brake System Bleeding**

www.cargeek.ir

www.cargeek.ir

Special Tools

Tool Number	Description	Picture
TCH00015	Replacement brake rear caliper piston	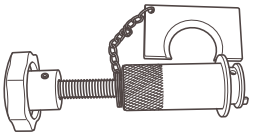 TCH00015
TCH00105	Adapter - replacement brake rear caliper piston	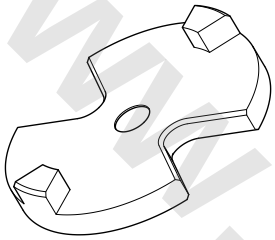 TCH00105
TCH00022	Brake disc runout test kit	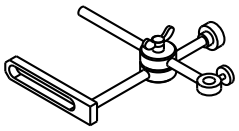 TCH00022

www.cargeek.ir

www.cargeek.ir

www.cargeek.ir

Park Brake

Specifications

Torque

Description	Value
Bolt-Electric brake control module to bracket	7–10 Nm

www.cargeek.ir

www.cargeek.ir

www.cargeek.ir

Description and Operation

System Layout

EPB Layout

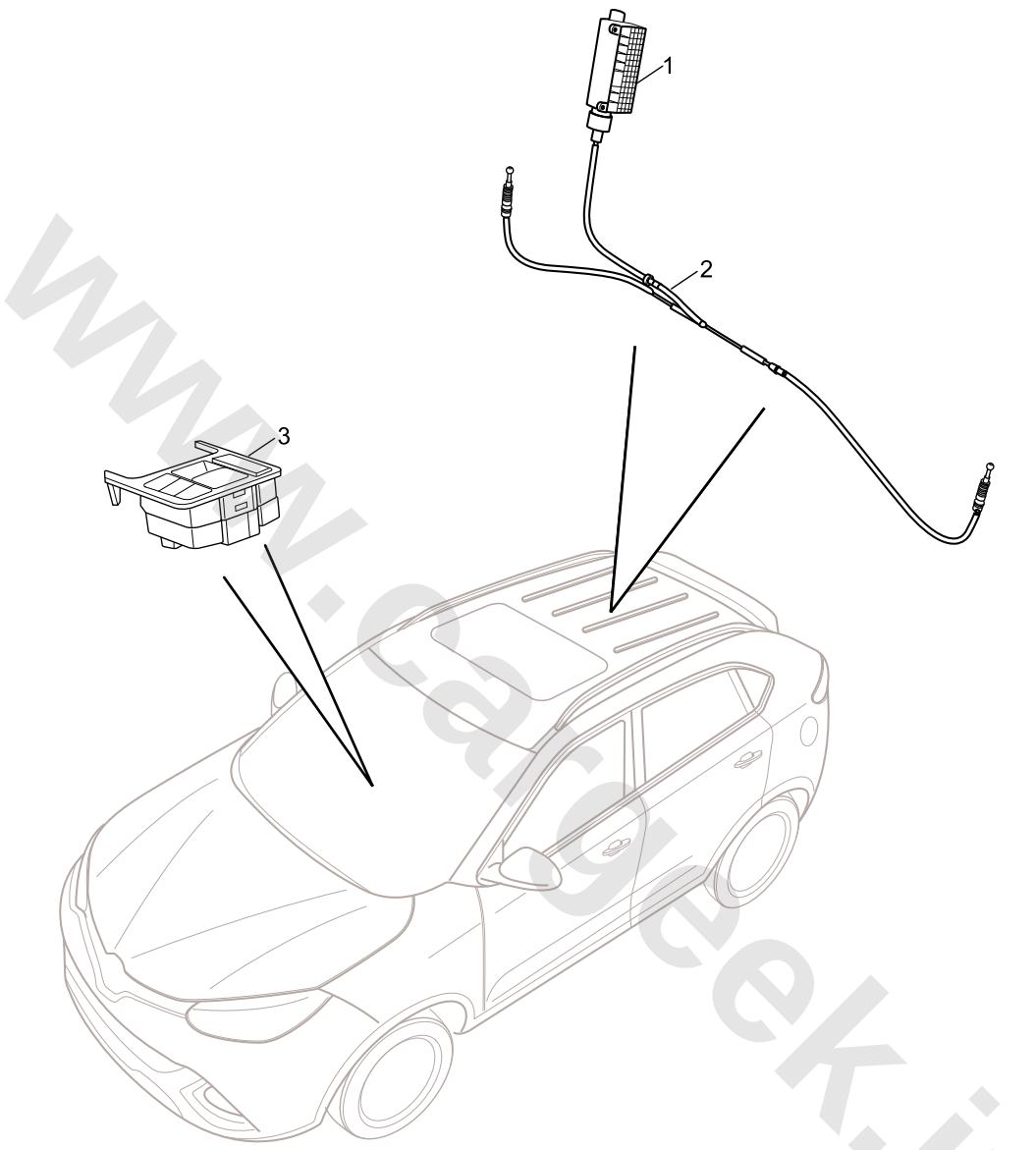

S2410012

1. EPB Module
2. Parking Brake Cable Assembly
3. **EPB** Switch

www.cargeek.ir

www.cargeek.ir

System Control Diagram

EPB Control Diagram

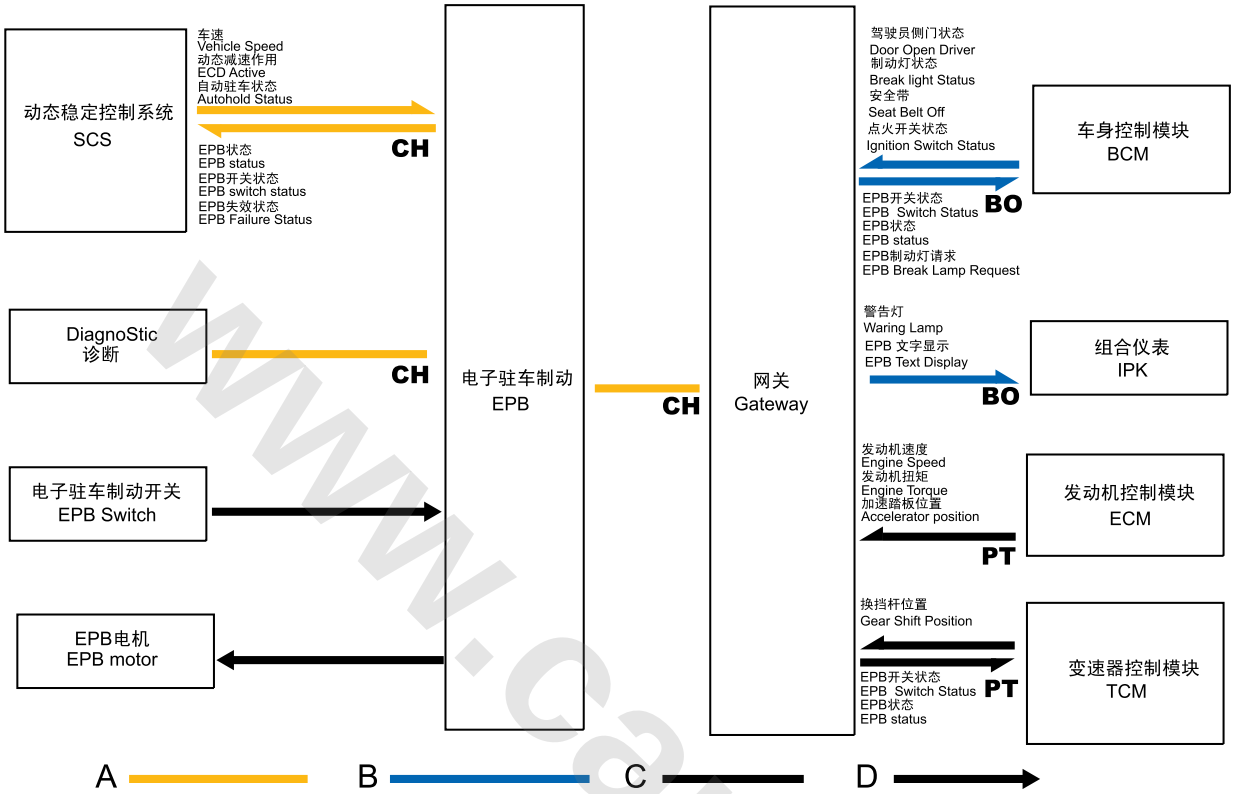

S2411003

A = Chassis HS CAN Bus; B = Body HS CAN Bus; C = Power HS CAN Bus; D = Hard Wire

www.cargeek.ir

www.cargeek.ir

Description

Electronic Parking Brake (EPB)

Description of Electronic Parking Brake (EPB)

The EPB is comprised of the **EPB** switch, EPB module and 1 EPB motor. The **EPB** switch on the center console facilitates the driver's operation. Under the condition of power shortage, the electronic parking brake can not be engaged or released. The EPB module is on the right rear body, which is connected with the body harness by a harness connector. The EPB motor is integrated in the EPB module, fit the EPB cable to the rear wheel and apply brake force on the rear wheel.

Connect the EPB.

When the vehicle is static or the ignition switch is off, the electronic parking brake can be applied at any time. When leaving the vehicle or parking, the parking brake must be applied.

- Pull the **EPB** switch (button) up until the indicator lamp on the **EPB** switch comes on.
- If the indicator lamp on the **EPB** switch and the IPK Ⓟilluminates, the EPB is activated.
- If the indicator lamp on the IPK Ⓡilluminates, the EPB fails, please contact the local after-sales service center immediately.

Disable the EPB manually

- Connect the ignition switch
- Press the **EPB** switch, depress the brake pedal or slightly depress the accelerator pedal when the engine is working.
- If the indicator lamp on the switch/IPK Ⓟ goes out, the EPB is disabled.

Aux Start

The EPB automatically judges the intention of the driver, and release the parking brake automatically. For hill start, the EPB can judge engine torque output and prevent slip.

When you fasten the seat belt, place the ignition switch in "ON" position, engage a gear and slightly depress the accelerator pedal to start the vehicle, the electronic parking brake will close automatically. For manual transmission, the clutch must be depressed completely before starting so that the system can identify and release the parking brake.

ECD

During driving, when in any emergency, such as the vehicle can not be stopped by stepping on the pedal, decelerate by pulling up and holding the **EPB** switch.

- Pull the **EPB** switch up and hold to realize emergency brake. Continuous acoustic alarm can be heard during emergency brake.
- Release the **EPB** switch or depress the accelerator pedal to cancel the brake process.
- During dynamic deceleration of the EPB, the EPB can prevent the rear wheel from being locked by the clamp force of the EPB actuator.

EPB moduleEPB Harness Connector BY036

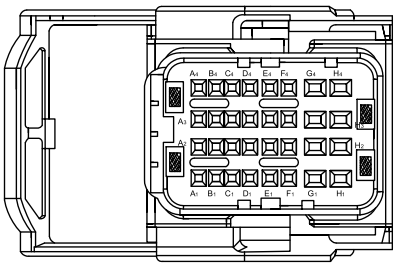

Pin No.	Description
A1	—
A2	Chassis HS CAN Low
A3	Chassis HS CAN High
A4	—
B1	—
B2	—
B3	—
B4	—
C1	—
C2	Analogue Brake
C3	Brake Signal Input
C4	**EPB** Indicator Lamp
D1	—
D2	Switch Ground
D3	Release Signal Input
D4	—
E1	—
E2	—
E3	—
E4	—
F1	—
F2	—
F3	—
F4	—
G1	—
G2	Ground

www.cargeek.ir

Pin No.	Description
G3	Wake-up
G4	KL.30
H1	—
H2	Ground
H3	—
H4	KL.30

Pin No.	Description
1	Switch Ground
2	Release Signal Input
3	Indicator
4	KL.30
5	Ground
6	Brake Signal Input
7	Analogue Brake
8	—

EPB Harness Connector CE003

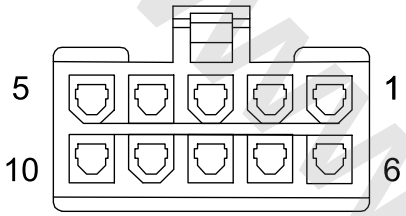

www.cargeek.ir

www.cargeek.ir

www.cargeek.ir

Service Procedures

EPB Module

Remove

1. Release the parking brake cable.

☞ **Self-learning & Adjustment, Programming & Coding - Parking Brake Cable Full Release**

2. Disconnect the battery negative.
3. Remove wheels.

☞ **Wheel Remove**

4. Raise the vehicle on a lift.
5. Remove the rear wheel house liner.

☞ **Rear Wheel House Liner Remove**

6. Disconnect the connector (1) of the EPB module.
7. Disconnect the left/right parking brake cables from the parking brake cable on the EPB module side.
8. Remove the clip (2) fixing the parking brake cable assembly on the EPB module side to the rear axle, and remove parking brake cable on the EPB module side.
9. Remove 3 nuts (2) securing the EPB module on the bracket.

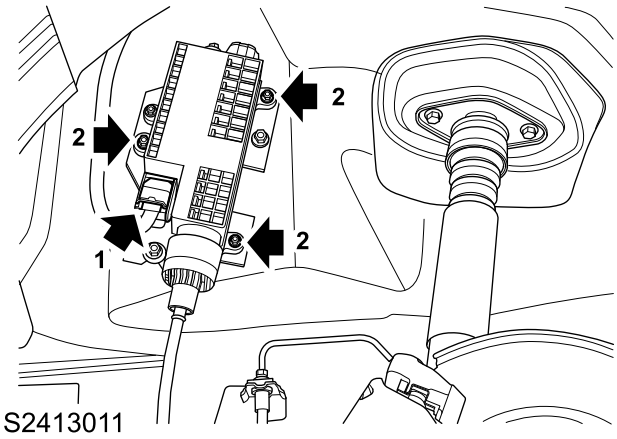

10. Remove the EPB module from the vehicle.

Refit

1. Secure the EPB module on the bracket, fit 3 nuts and tighten to **7–10 Nm**.
2. Fix the parking brake cable on the EPB module side to the rear axle, and secure with clips.
3. Fix the left/right parking brake cables to the parking brake cable on the EPB module side.
4. Connect the connector of the EPB module.
5. Fit the rear wheel house liner.

☞ **Rear Wheel House Liner Refit**

6. Lower the vehicle.
7. Fit the wheels.

☞ **Wheel Refit**

8. Connect the battery negative.
9. Programme and code the EPB module.

☞ **Self-learning and Adjustment, Programming and Coding - EPB Module Replacement**

www.cargeek.ir

Parking Brake Cable

Remove

1. Release the parking brake cable. 。

☞ **Self-learning & Adjustment, Programming & Coding - Parking Brake Cable Full Release**

2. Remove the wheel.

☞ **Wheel Remove**

3. Raise the vehicle on a lift.
4. Disconnect the parking brake cable on the EPB module side and the left/right parking brake cables (2).

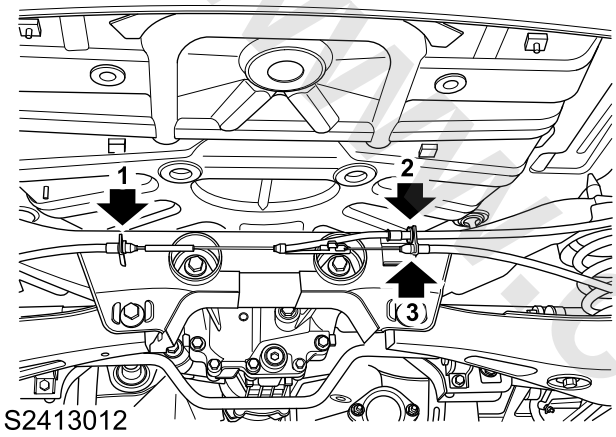

S2413012

5. Remove the clip (2) fixing the left parking brake cable to the rear brake shoe assembly.

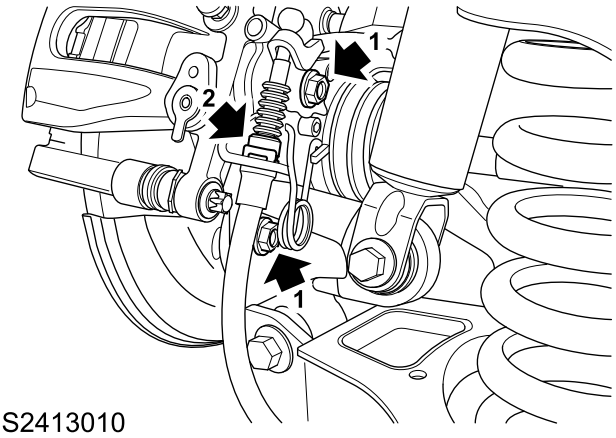

S2413010

6. Remove the clip fixing the right parking brake cable to the rear brake shoe assembly.

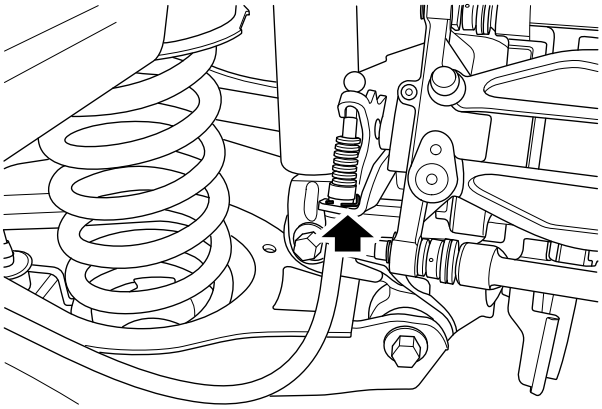
S2413009

7. Remove the clip (1) fixing the left parking brake cable to the rear axle.
8. Remove the clip (3) fixing the right parking brake cable to the rear axle.

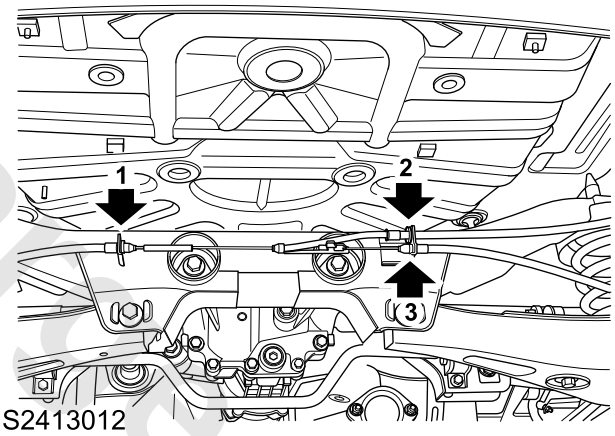

S2413012

9. Remove the parking brake cable.

Refit

1. Fix the right parking brake cable to the rear axle and secure with clips.
2. Fix the right parking brake cable to the rear brake shoe assembly and secure with clips.
3. Fix the left parking brake cable to the rear axle and secure with clips.
4. Fix the left parking brake cable to the rear brake shoe assembly and secure with clips.
5. Fit the left/right parking brake cables to the parking brake cable on the EPB module side.
6. Lower the vehicle.
7. Fit the wheels.

☞ **Wheel Refit**

8. Adjust the parking brake cable.

☞ **Self-learning & Adjustment, Programming & Coding - Parking Brake Cable Adjustment**

www.cargeek.ir

Brake Module

Specifications

Torque

Description	Value
Bolt-SCS/ABS to bracket	7–10Nm
Bolt-bracket to body	19-25Nm
Brake pipe	15-19Nm
Bolt-Front wheel speed sensor to wheel carrier	7–10Nm
Screw-Front wheel speed sensor bracket to body	7-10Nm
Bolt-Rear wheel speed sensor to wheel carrier	7–10Nm

www.cargeek.ir

www.cargeek.ir

Description and Operation

System Layout

SCS Layout

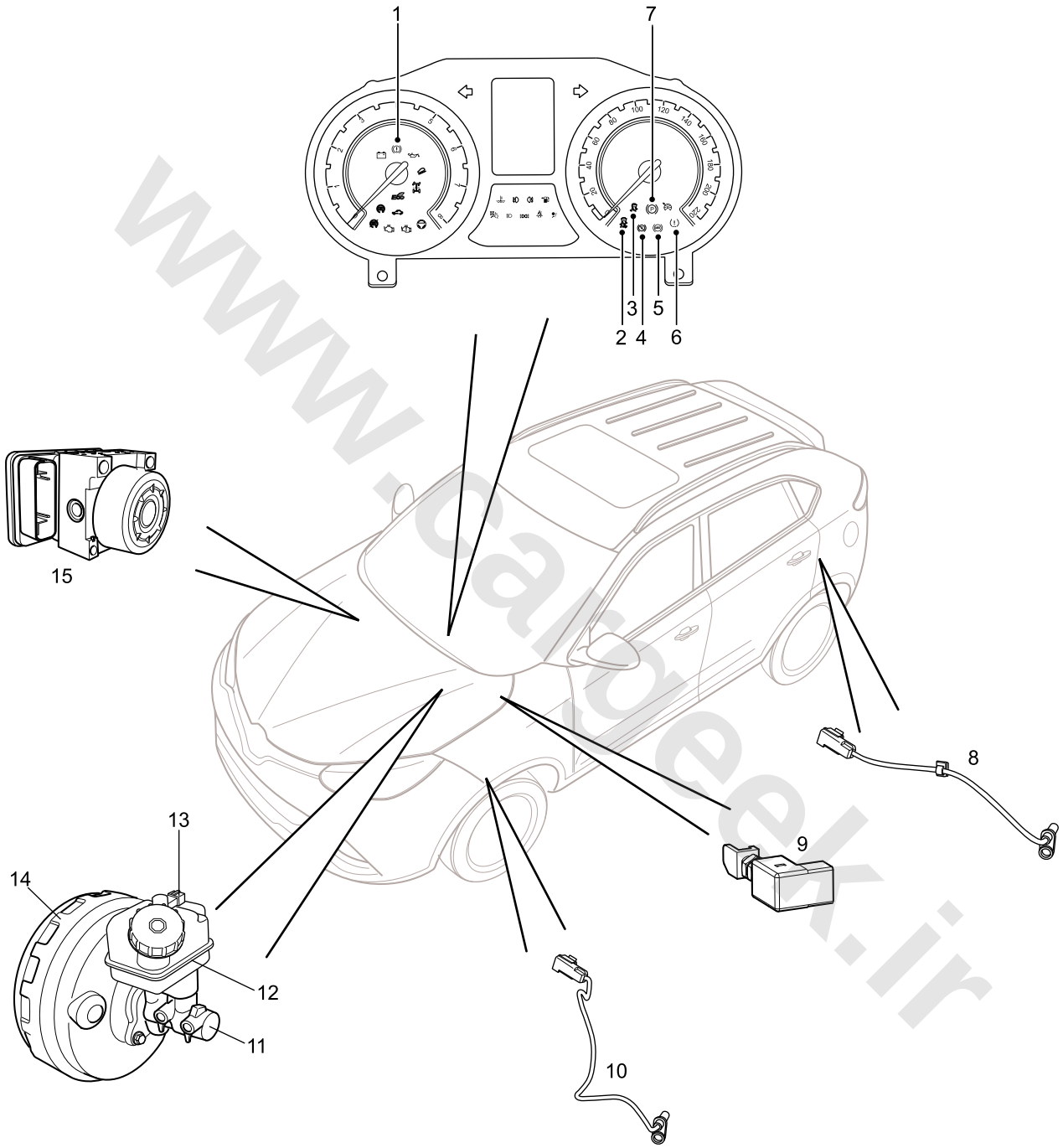

S2410013

1. Brake System malfunction indicator lamp
2. **SCS** OFF Indicator Lamp
3. **SCS** ON/malfunction indicator lamp
4. **EPB** malfunction indicator lamp
5. **ABS** Warning Lamp
6. **TPMS** Failure & Low Tire Pressure Warning Lamp
7. **EPB** Status/Self-lock Indicator Lamp
8. Rear Wheel Speed Sensor Assembly
9. Brake Lamp Switch
10. Front Wheel Speed Sensor Assembly
11. Brake Master Cylinder
12. Brake Fluid Reservoir
13. Brake Fluid Level Indicator Switch
14. Vacuum Booster

www.cargeek.ir

www.cargeek.ir

15. **SCS**/**ABS** Modulator

www.cargeek.ir

www.cargeek.ir

www.cargeek.ir

System Control Diagram

ABS/SCS Control Diagram

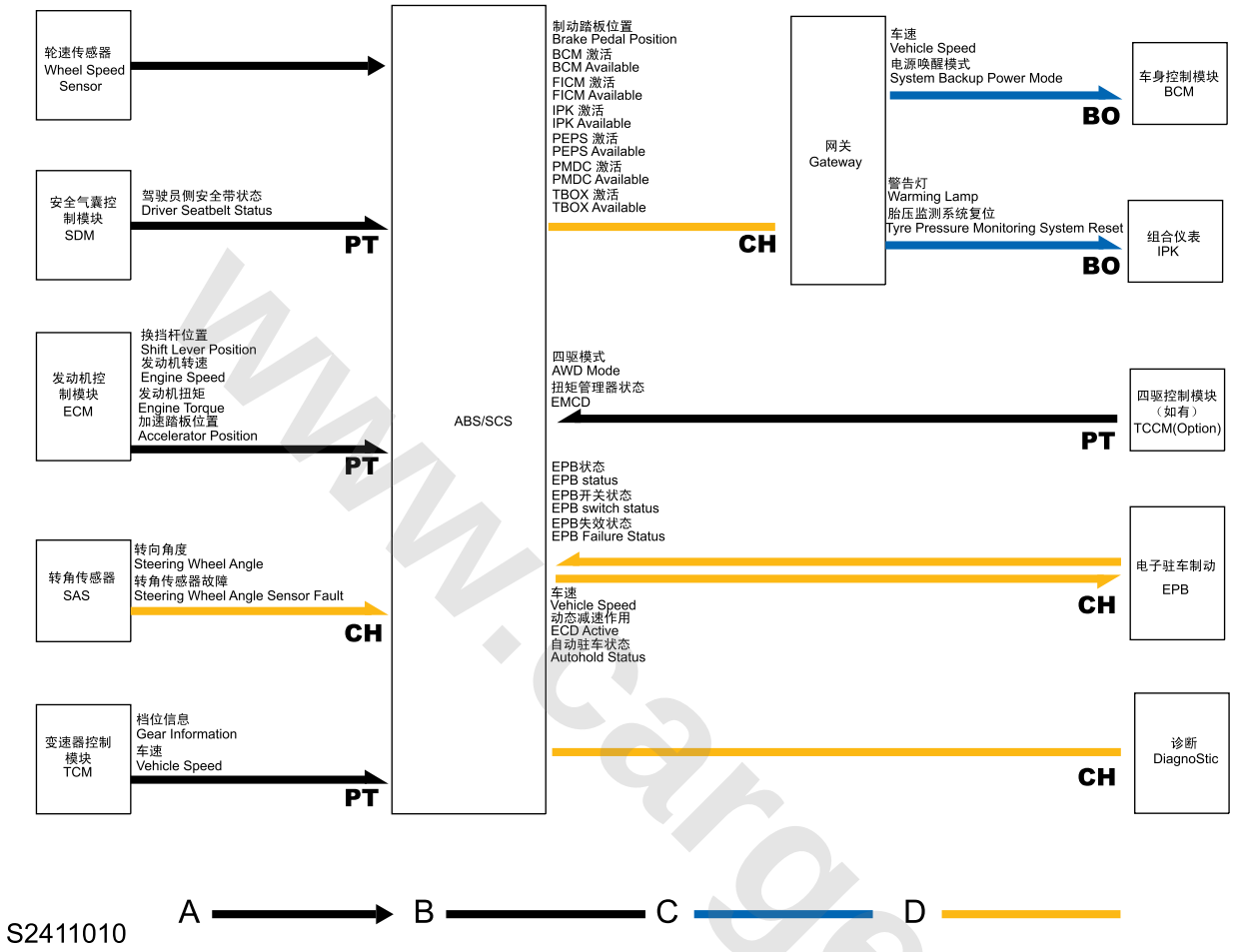

A = Hard Wire; B = Power HS CAN Bus; C = Body HS CAN Bus ; D = Chassis HS CAN Bus

www.cargeek.ir

www.cargeek.ir

Description

ABS/SCS Modulator

The **ABS**/**SCS** can assist the driver to well control the driving and stability under all driving conditions and ensure maximum vehicle safety. The **ABS**/**SCS** modulator is a maintenance free 4-channel component and consists of a combinational hydraulic regulator (HCU) and a **ECU** which controls the regulator action, **ECU** can control the HCU according to the status of various system components, and allow it to convert under different operation conditions (including normal braking, pressure-maintaining braking, decompression braking and boost braking).

Hydraulic Control Unit (HCU) Schematic Diagram

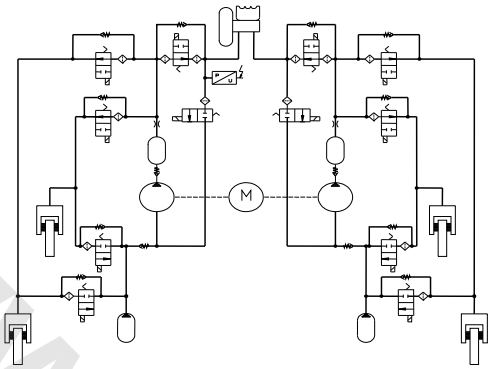

S402028

Brake Hydraulic System Schematic Diagram

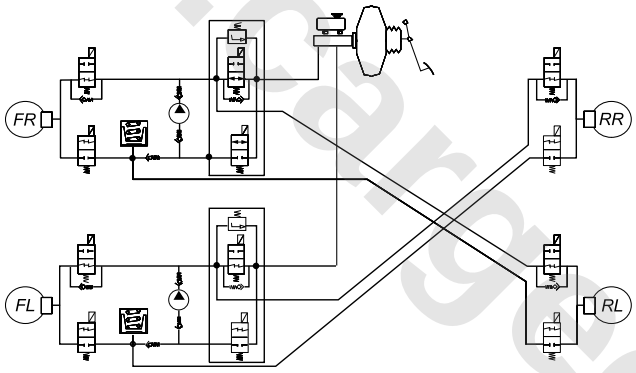

S402022

Here is the operation principle of the brake pressure regulation for one of the four channels (Other channels work on the same principle).

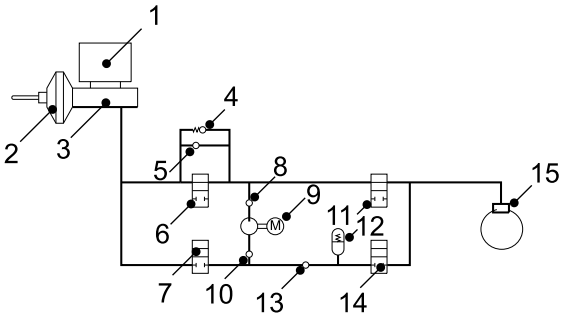

S402023

1. Oil Cup
2. Vacuum Booster
3. Brake Master Cylinder
4. Overflow Valve
5. Check Valve
6. Isolating Solenoid Valve
7. System Inlet Solenoid Valve
8. Check Valve
9. Electric Pump
10. Check Valve
11. Wheel Cylinder Inlet Solenoid Valve
12. Low Pressure Accumulator
13. Check Valve
14. Wheel Cylinder Outlet Solenoid Valve
15. Brake Cylinder

Normal Braking

Under normal braking, all components of the brake pressure regulation device are de-energized, the brake fluid flows through the isolation valve and wheel cylinder inlet solenoid valve to the wheel cylinder, and the brake pressure regulation device will not impact the normal braking, Illustrated as the following chart.

www.cargeek.ir

www.cargeek.ir

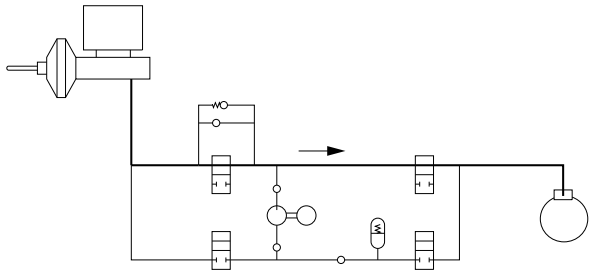

S402024

Boost Stage

When the **ABS**/**SCS** system requires to increase the wheel cylinder brake pressure, the System Inlet Solenoid Valve 7 is powered on, the Isolation Solenoid Valve 6 is powered off, the Electric Pump 9 begins to operate, the brake fluid flows into the Wheel Cylinder 15, and the brake pressure increases. See the following figure. Among them, the Overflow Valve 4 plays the role of safety protection; if the brake pressure exceeds the maximum system safety pressure limitation when boosting brake pressure, the Overflow Valve 4 will be turned on and allow the brake fluid flow back to the Brake Master Cylinder 3.

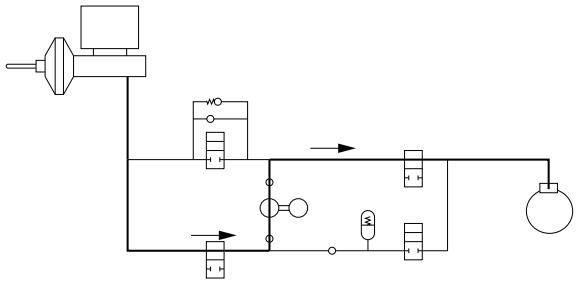

S402025

Pressure-maintaining Stage

When it needs to maintain the wheel cylinder brake pressure, both the wheel cylinder inlet and outlet solenoid valves 11 and 14 will be cut off, the wheel cylinder disconnects with external pipeline, and the wheel cylinder internal pressure remains unchanged, Illustrated as the following chart.

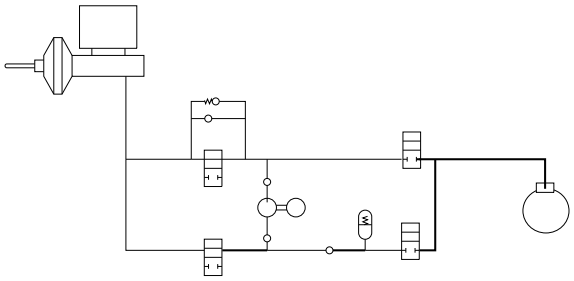

S402026

Decompression Stage

When it needs to reduce the wheel cylinder brake pressure, the system inlet solenoid valve 7 and wheel cylinder inlet solenoid valve 11 will be cut off, the isolating solenoid valve 6 and the system outlet solenoid valve 14 will open, the brake fluid flows into the low pressure accumulator 12 to relieve the hydraulic impact caused by the high pressure brake fluid, the electric pump 9 begins to operate, the brake fluid in the wheel cylinder will return to the master cylinder, and the wheel cylinder pressure reduces, Illustrated as the following chart.

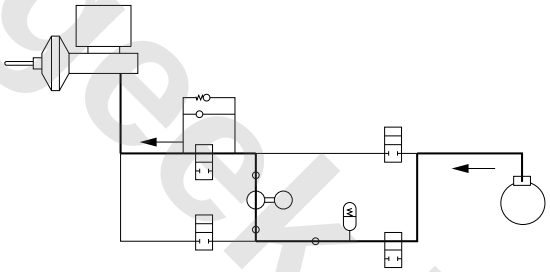

S402027

The above processes continue in the operation of the **ABS**/**SCS** system until the vehicle is regulated to the optimum driving condition.

End View of **SCS** modulator Connector BY003 and **ABS** modulator Connector BY023

www.cargeek.ir

www.cargeek.ir

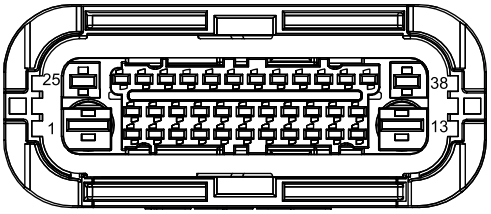

Detailed Pin Information of **SCS** Connector

Pin No.	Pin Function
1	KL.30
2	KL.30
3	—
4	**SCS** Switch
5	—
6	Wake-up
7	Vehicle Speed
8	—
9	—
10	Power CAN Low
11	Power CAN High
12	—
13	Pump Motor Ground
14	—
15	—
16	—
17	Vacuum Sensor Power Supply
18	Chassis CAN Low
19	Chassis CAN High
20	Hill Descent Control Switch
21	Vacuum Sensor Signal
22	—
23	Vacuum Sensor Ground
24	—
25	KL.30
26	Right Front Wheel Speed Sensor Ground
27	Right Front Wheel Speed Sensor Signal
28	—
29	Left Rear Wheel Speed Sensor Signal
30	Left Rear Wheel Speed Sensor Ground
31	Diagnosis
32	Brake Fluid Level Switch
33	Right Rear Wheel Speed Sensor Ground
34	Right Rear Wheel Speed Sensor Signal
35	—
36	Left Front Wheel Speed Sensor Signal
37	Left Front Wheel Speed Sensor Ground
38	—

Detailed Pin Information of **ABS** Connector

Pin No.	Pin Function
1	KL.30
2	Brake Fluid Level Switch
3	Vehicle Speed
4	—
5	—
6	Wake-up
7	—
8	—
9	—
10	Chassis CAN Low
11	Chassis CAN High
12	—
13	Ground
14	—
15	—
16	—
17	—
18	—
19	—
20	—
21	—
22	—
23	—
24	—
25	KL.30

www.cargeek.ir

www.cargeek.ir

Pin No.	Pin Function
26	Right Front Wheel Speed Sensor Ground
27	Right Front Wheel Speed Sensor Signal
28	Vacuum Sensor Power Supply
29	Left Rear Wheel Speed Sensor Signal
30	Left Rear Wheel Speed Sensor Ground
31	Diagnosis
32	Vacuum Sensor Signal
33	Right Rear Wheel Speed Sensor Ground
34	Right Rear Wheel Speed Sensor Signal
35	Vacuum Sensor Ground
36	Left Front Wheel Speed Sensor Signal
37	Left Front Wheel Speed Sensor Ground
38	—

End View of SAS Connector FA028

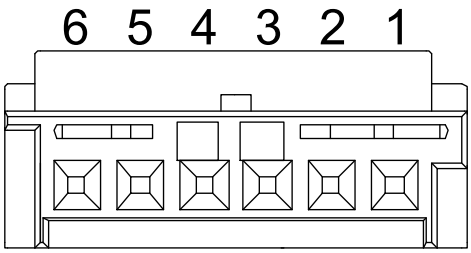

S2452004

Detailed Pin Information of SAS Connector

Pin No.	Pin Function
1	—
2	Ground
3	Wake-up activated
4	—
5	Chassis CAN High
6	Chassis CAN Low

Wheel speed sensor

The wheel speed sensors are active sensors (i.e. they receive the power supply from the **ABS** modulator), and they transmit the wheel speed signal to the **ABS** modulator. The sensors are mounted in each front wheel hub and each rear suspension trailing arm, and are extremely close to the inner sealing device of each relevant wheel bearing. Rotating together with the wheels, the sealing device includes a magnetic element with 48 pairs of magnetic poles, when the wheels rotate, the magnetic poles in the sealing device generates voltage fluctuation in the **ABS** sensor, the voltage fluctuation is converted into square wave signal and output to the **ABS** modulator. The signal frequency is proportional to wheel speed. In actual use, each **ABS** sensor has a wire in the engine compartment or luggage compartment, which connects the sensor to the vehicle harness.

Yaw Sensor

The yaw sensor is integrated in the **SCS**, which measures vehicle rotation around the vertical axis and vehicle slip and transmits the corresponding data to the **SCSECU**, the **ECU** compares the signals from the yaw sensor and the steering angle sensor and determines the forthcoming situation, and then takes corresponding control. The Yaw Sensor adopts the whole micro-structure method to process two relative thick oscillating components (quality film) from the crystal, the two components take antiphase oscillation at a resonant frequency determined by quality and the coupling spring. Each oscillating component has a miniaturized formal microstructure capacity accelerated speed sensor. When the sensor chip rotates around its vertical axis in yaw rate Ω, the Coriolis acceleration which is perpendicular to the oscillating direction on the crystal surface is recorded. The accelerations are proportional to the product by the yaw rate and the current maintained constant oscillating speed.

Tyre Pressure Monitoring

The indirect tyre pressure monitoring system monitors the tyre pressure by comparing the speed difference between the tyres through the wheel speed sensor of the **SCS** system. The **SCS** uses the wheel speed sensor to determine if the wheel is locked and if the antilock brake is required. When the tyre pressure is low, the weight of the vehicle will cause decreased tyre diameter, and this may result in change of the vehicle speed, which can trigger the alarm system. After replacing/charging the tyre, the TPMS shall be reset. After reset, the TPMS will undergo a self-learning, the status of the self-learning can be viewed by the **VDS**.

Auto Hold

When the engine is working, and where regular or long-time stop is required (for example, waiting for traffic lights, stopping on a hill or driving in the stop and go traffic), the auto hold function can help the driver to stabilize the vehicle.

After the vehicle stops, the driver do not need to depress the brake pedal, the auto hold function can lock the vehicle automatically.

www.cargeek.ir

www.cargeek.ir

When the driver depresses the accelerator pedal to start the vehicle, the auto hold function releases the brake immediately and the vehicle moves according the inclination of the road.

If the working condition of the auto hold changes when the vehicle is stationary, the auto hold will close automatically and the button indicator lamp will turn off. In this case, the EPB may activate automatically to control the vehicle.

Generally, the auto hold has three statuses: OFF, STANDBY and ACTIVE.

www.cargeek.ir

www.cargeek.ir

www.cargeek.ir

Service Procedures

ABS Modulator

Remove

1. Disconnect battery earth lead.
2. Put a cloth under the **ABS** modulator to absorb the spilled oil.
3. Disconnect the connector from the **ABS** modulator.
4. Disconnect 2 oil inlet brake pipes (1) from the **ABS** modulator.

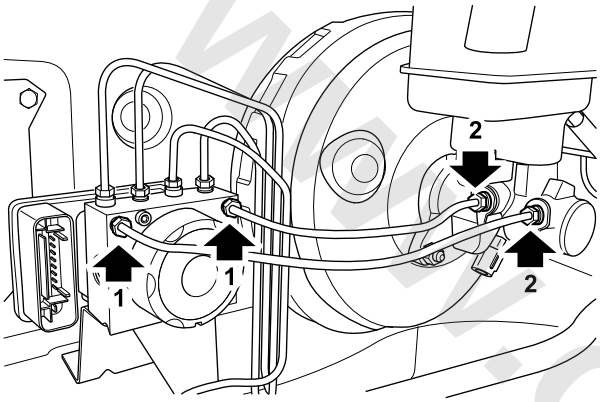

S2413004

5. Cover the brake pipe connector and prevent brake fluid loss and pollution.
6. Record 4 positions of the oil outlet pipe on the **ABS** modulator for assembly, then disconnect the brake pipe oil outlet pipe from the top of the **ABS** modulator.

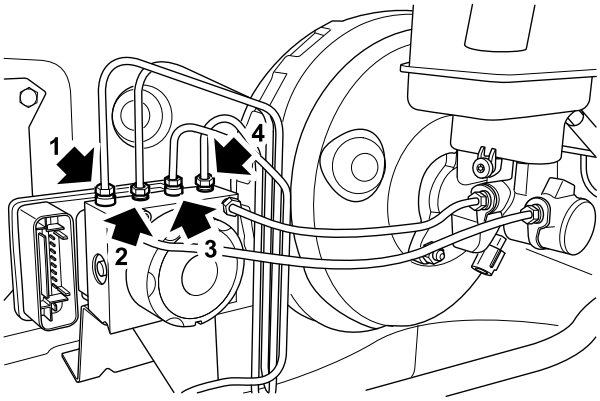

S2413005

7. Cover the brake pipe connector and prevent brake fluid loss and pollution.
8. Remove 1 bolt fixing the under mounting bracket of**ABS** to the body.

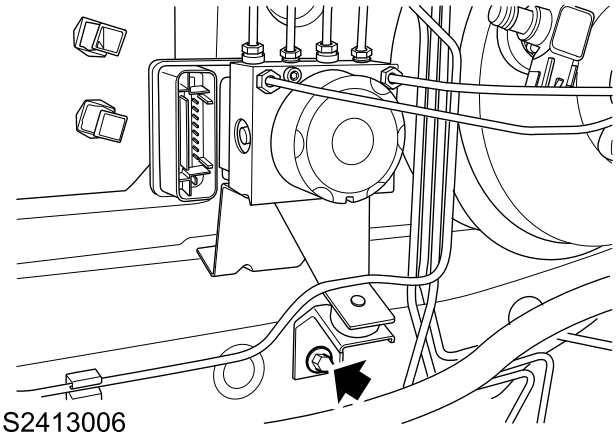

S2413006

9. Remove 2 bolts securing the **ABS** modulator on the mounting bracket.

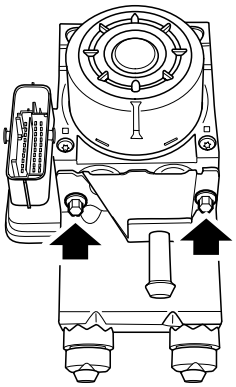

S2413007

10. Remove the **ABS** mounting bracket from the body.

Refit

1. Connect the connector disconnected from the **ABS** modulator.
2. Fit the **ABS** modulator to the bracket.
3. Fix the **ABS** modulator to the mounting bracket, fit 2 bolts, tighten to **7–10Nm** and check the torque.
4. Fix the under mounting bracket of **ABS** to the body, fit 1 bolt, tighten to **19-25Nm** and check the torque.
5. Clean the hard brake pipe connector.
6. Connect the oil inlet and outlet brake pipes to the **ABS** modulator, ensure that the pipelines are connected to the right port. Tighten the connector of the brake pipe to **15-19Nm** and check the torque.
7. Bleed the brake system.

☞**Brake System VDS Bleeding**

8. Connect battery earth lead.
9. Programme and code the **ABS** modulator.

☞**Self-learning and Adjustment, Programming and Coding - SCS Replacement**

www.cargeek.ir

www.cargeek.ir

Front Wheel Speed Sensor

Remove

1. Disconnect battery earth lead.
2. Remove front wheels.

☞ **Wheel Remove**

3. Disconnect the connector of the front wheel speed sensor.

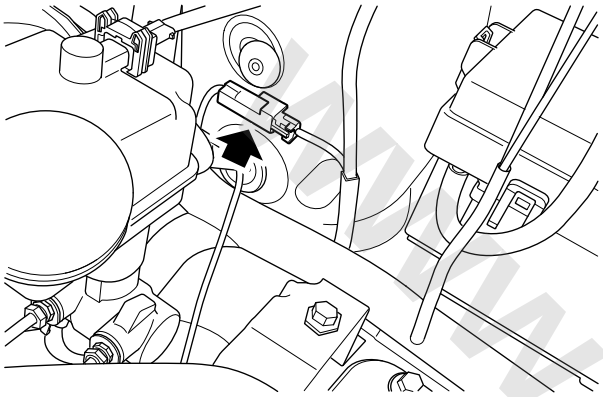

S2413001

4. Remove 1 bolt fixing the front wheel speed sensor bracket to the front suspension arm.
5. Remove 1 bolt fixing the front wheel speed sensor to the steering knuckle.

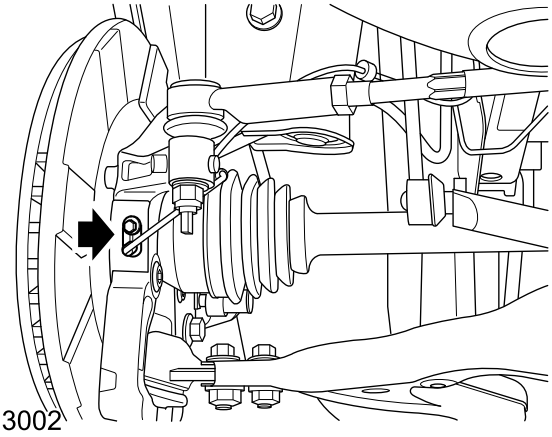

S2413002

6. Remove the front wheel speed sensor.

Refit

1. Clean the contact surface between the wheel speed sensor and the steering knuckle.
2. Fit the front left/right wheel speed sensor to the vehicle according to the alignment of the harness as following.

Caution: If the trend of the harness is incorrect, it may intervene with the drive shaft, and there is risk that the wiring harness is worn to break.

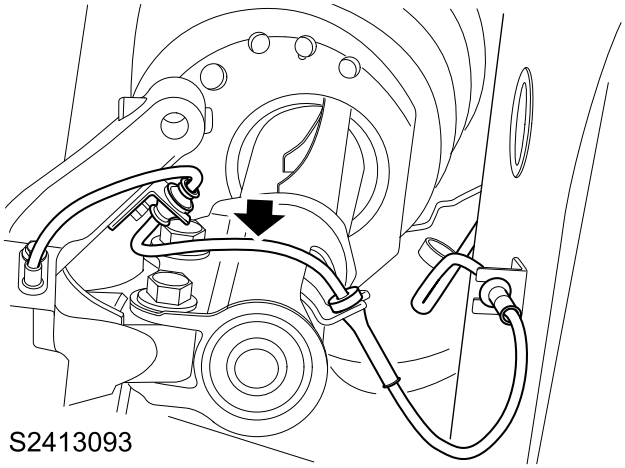

S2413093

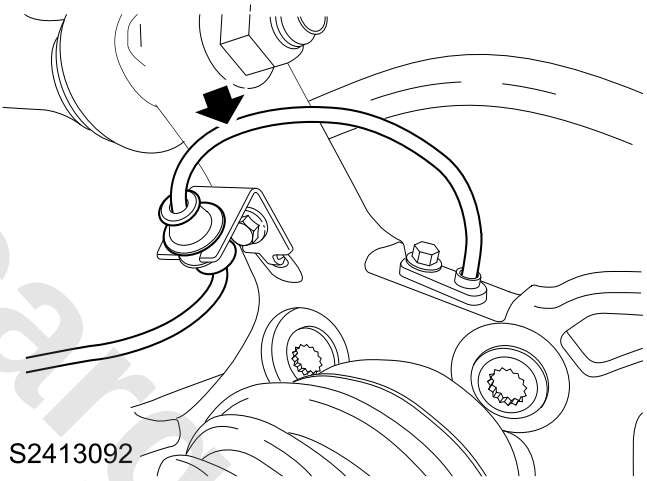

S2413092

3. Fix the front wheel speed sensor to the steering knuckle, fit 1 bolt and tighten to **7–10Nm**.
4. Fix the front wheel speed sensor bracket to the front suspension arm, fit 1 bolt and tighten to **7-10Nm**.
5. Connect the connector of the front wheel speed sensor.
6. Fit the front wheel.

☞ **Wheel Refit**

7. Connect battery earth lead.

www.cargeek.ir

www.cargeek.ir

Rear Wheel Speed Sensor

Remove

1. Disconnect battery earth lead.
2. Raise the vehicle on a lift.
3. Disconnect the connector (2) of the rear wheel speed sensor.
4. Remove 1 bolt (1) fixing the rear wheel speed sensor to the wheel bracket.

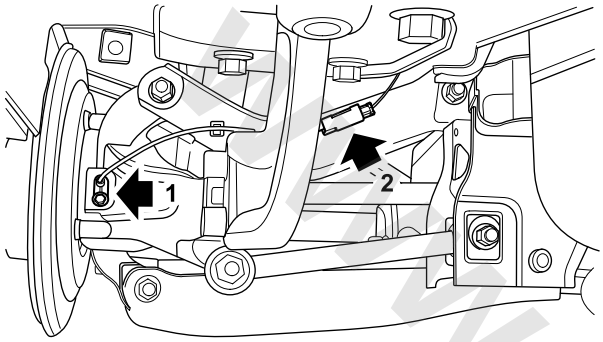

S2413003

5. Remove the clip fixing the rear wheel speed sensor to the rear suspension arm.
6. Remove the rear wheel speed sensor.

Refit

1. Clean the contact surface between the wheel speed sensor and the steering knuckle.
2. Fit the rear wheel speed sensor to the vehicle (2WD: the alignment of harness is shown in the following figure).

Caution: Harness must bu located between shock absorber and lower arm, and should not be fixed on the other side of the lower arm, otherwise the harness will intervene with swivel hub.

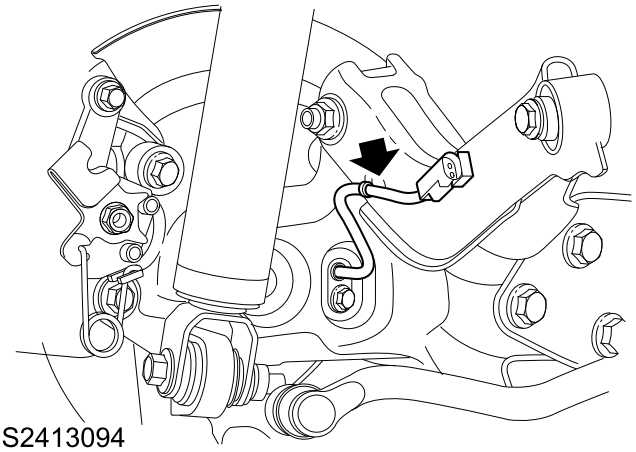

S2413094

3. Fix the rear wheel speed sensor to the rear suspension arm and secure with clips.
4. Fix the rear wheel speed sensor to the wheel bracket, fit 1 bolt and tighten to **7–10Nm**.
5. Connect the connector of the rear wheel speed sensor.
6. Lower the vehicle.
7. Connect battery earth lead.

www.cargeek.ir

www.cargeek.ir

www.cargeek.ir

Drive Axle

Specifications

Torque

Description	Value
Bolt-intermediate shaft support bearing bracket to engine	42–48Nm
.Nut- front knuckle to front lower arm	95±10Nm
Nut-Steering outer tie rod to steering arm	40–50Nm
Nuts- anti-roll bar links to anti-roll bar	50–65Nm
Nut-front drive shaft	350–370Nm
Bolts- rear damper to rear wheel carrier	75–90Nm
Nut- rear upper arm assembly to rear wheel carrier	50Nm+90°
Bolts- rear blade arm assembly to rear wheel carrier	60±5Nm
Nut- lateral rod assembly to rear wheel carrier	130Nm+90°
Bolt-propshaft to axle	55–61Nm
Bolt-propshaft to body	55–65Nm
Bolt-propshaft to PTU	26–34Nm

www.cargeek.ir

www.cargeek.ir

www.cargeek.ir

Description and Operation

System Layout

Right Front Drive Shaft Exploded View

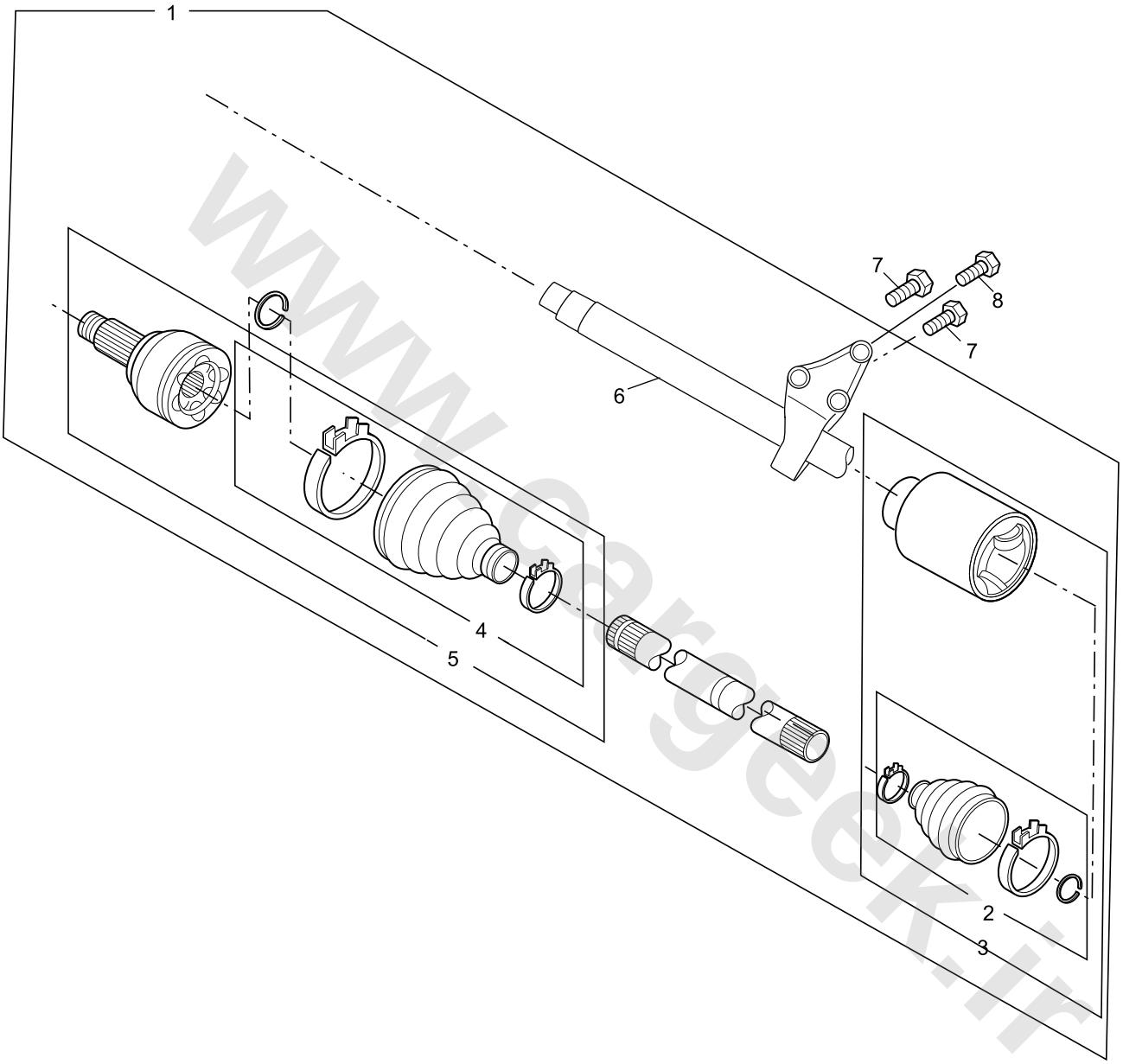

S9410016

1. Right Alxe Shaft Assembly - Front Wheel
2. Right Inner Joint Sleeve Service Kit - Front Wheel
3. Right Inner Joint Assembly Service Kit - Front Wheel
4. Right Outer Joint Sleeve Service Kit - Front Wheel
5. Right Outer Joint Assembly Service Kit - Front Wheel
6. Intermediate Shaft Assembly - Front Wheel
7. Bolt
8. Bolt

www.cargeek.ir

Left Front Drive Shaft Exploded View

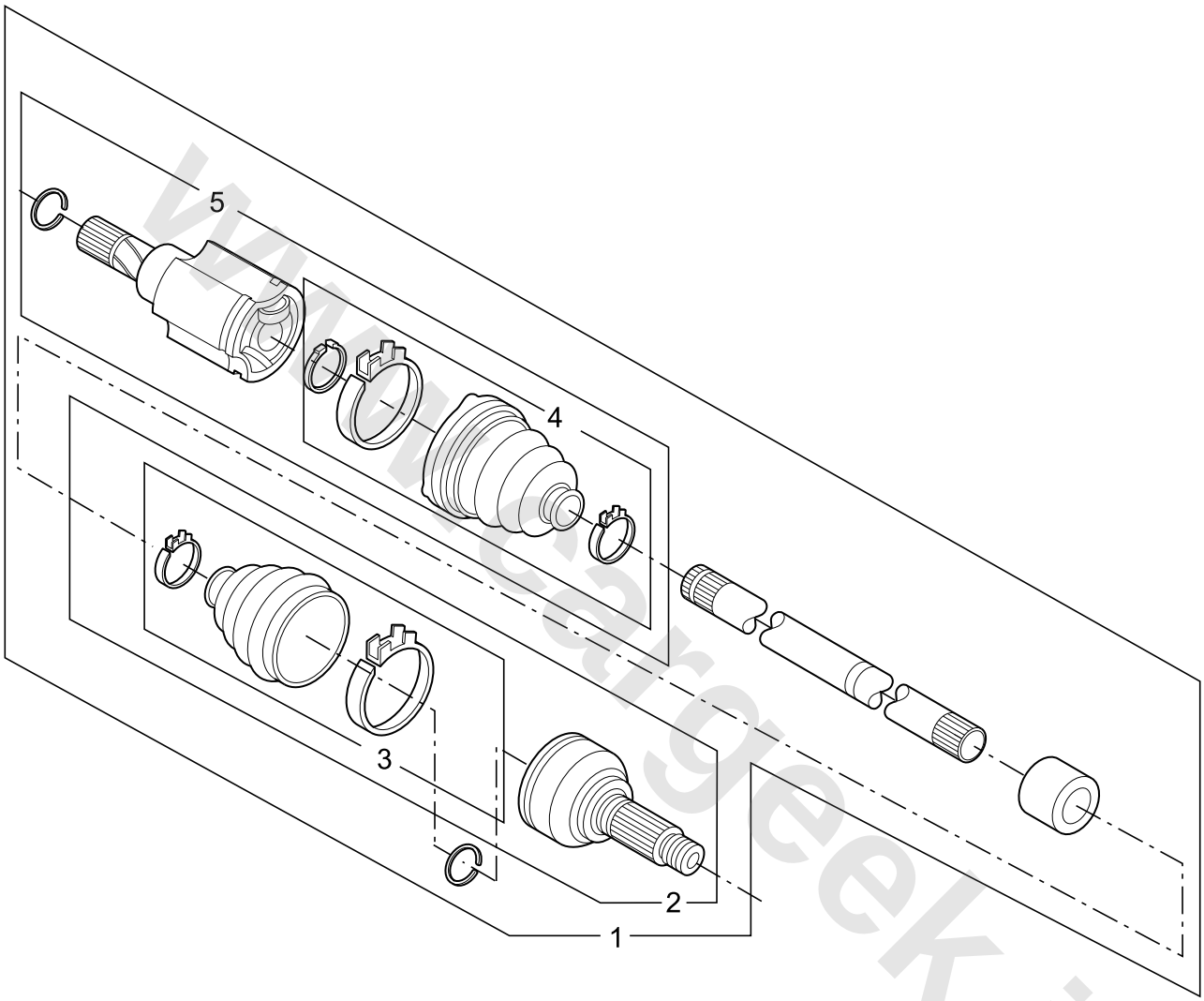

S9410017

1. Left Alxe Shaft Assembly - Front Wheel
2. Left Outer Joint Assembly Service Kit - Front Wheel
3. Left Outer Joint Sleeve Service Kit - Front Wheel
4. Left Inner Joint Sleeve Service Kit - Front Wheel
5. Left Inner Joint Assembly Service Kit - Front Wheel

www.cargeek.ir

www.cargeek.ir

Rear Drive Shaft Exploded View

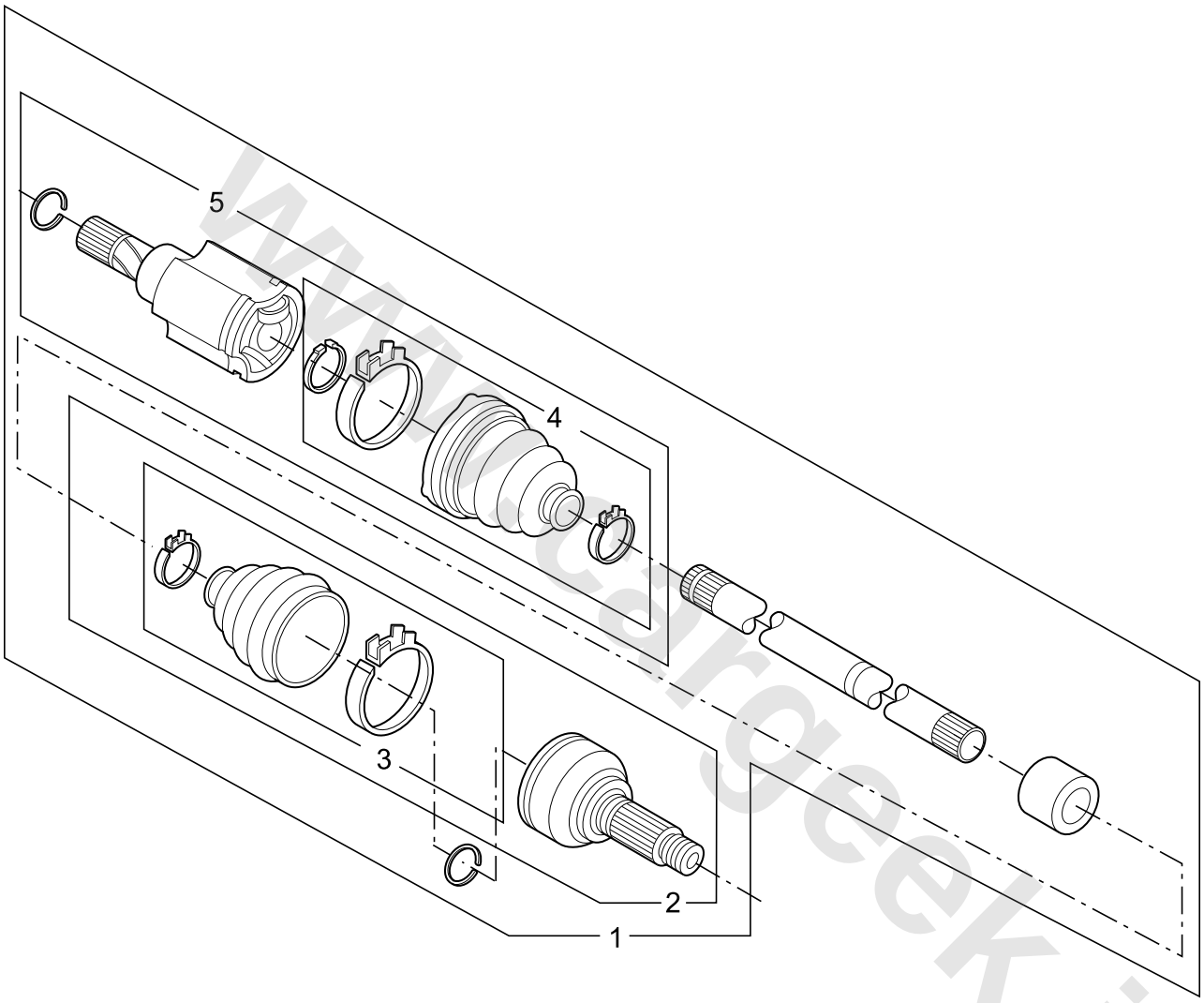

S9410018

1. Alxe Shaft Assembly - Rear Wheel
2. Outer Joint Assembly Service Kit - Rear Wheel
3. Outer Joint Sleeve Service Kit - Rear Wheel
4. Inner Joint Sleeve Service Kit - Rear Wheel
5. Inner Joint Assembly Service Kit - Rear Wheel

www.cargeek.ir

Drive Shaft Assembly Drawing

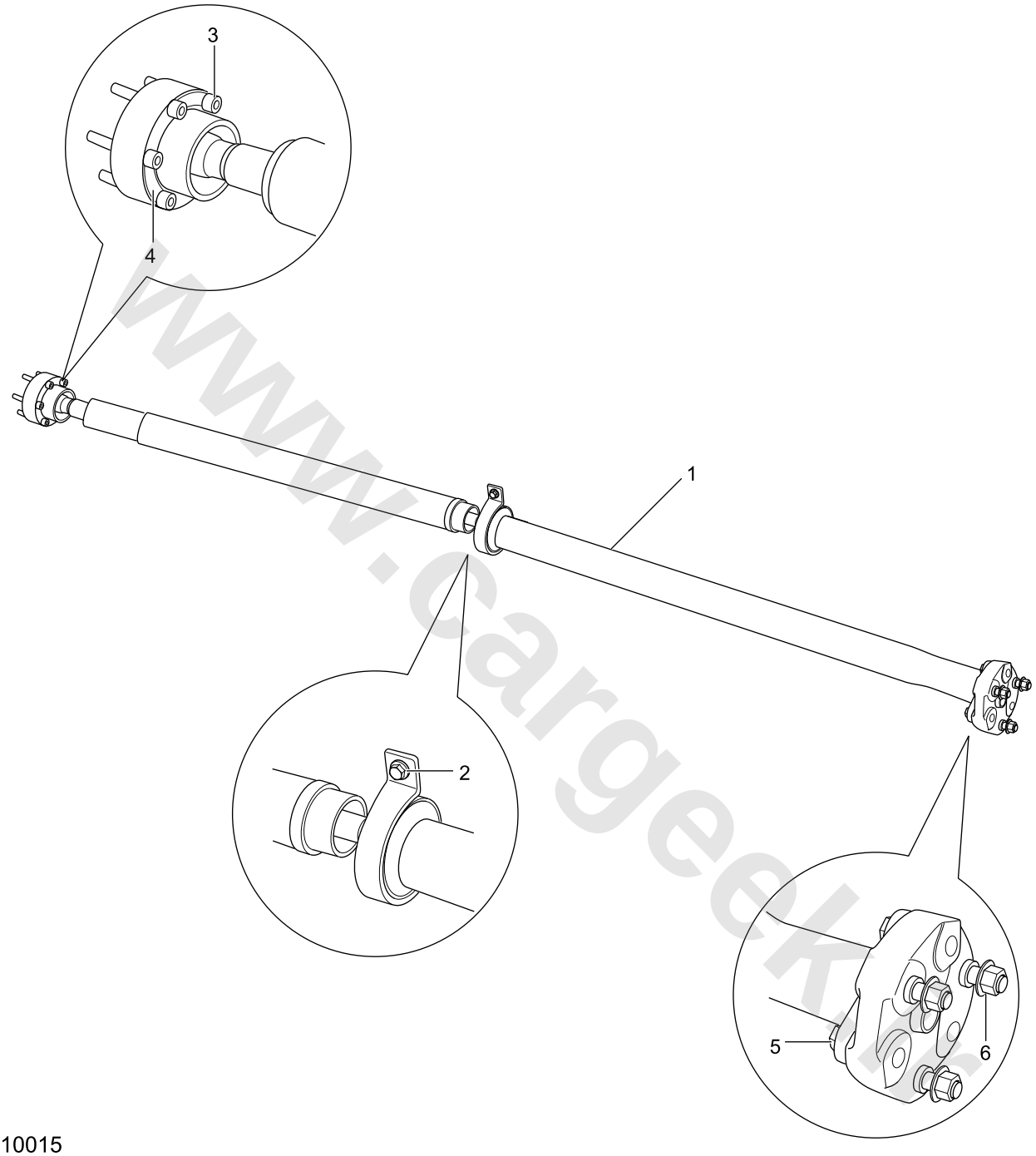

S9410015

1. Drive Shaft Assembly
2. Bolt
3. Bolt
4. Gasket
5. Bolt
6. Nut

www.cargeek.ir

www.cargeek.ir

Description

The drive shaft is a rigid shaft with the tripod joint assembly and the constant velocity joint assembly, one integral shaft with roller bearing and bearing support are fixed to the rear end of the engine block, and the other is located at the left side and is connected with the differential. There are three pins with ball gaskets on the tripod joint assembly to reduce the sliding resistance. The counter shaft and the tripod joint form an assembly. The constant velocity joint assembly is a cage type, which is connected to the counter shaft by splines, and is fixed with a steel wire snap ring. The constant velocity joint is filled with lubricating grease and is protected by the rubber sleeve. The drive shaft is also equipped with the shock absorption ring.

www.cargeek.ir

www.cargeek.ir

Service Procedures

Right Front Axle Shaft Assembly

Remove

1. Raise the vehicle on a lift.
2. Remove the front fender assembly.

☞ **Front Wheelhouse Liner – Remove**

3. Pry up the nut locking device of the front drive half shaft, depress the brake pedal, remove and discard drive half shaft nut.

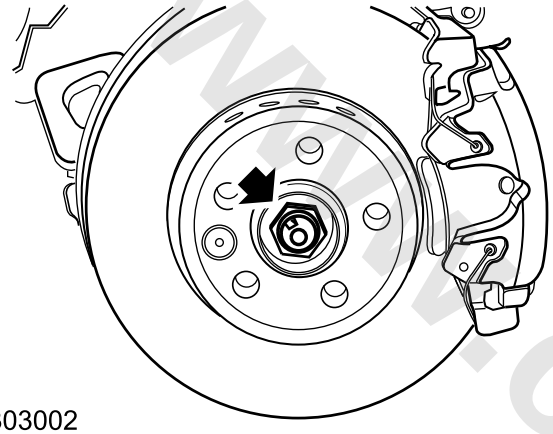

S303002

4. Unscrew the steering tie rod nut, fit a M10 nut to the steering tie rod ball joint and ensure the nut is aligned with the end of the ball pin.
5. Release the ball joint of the steering tie rod with the **T38008**.

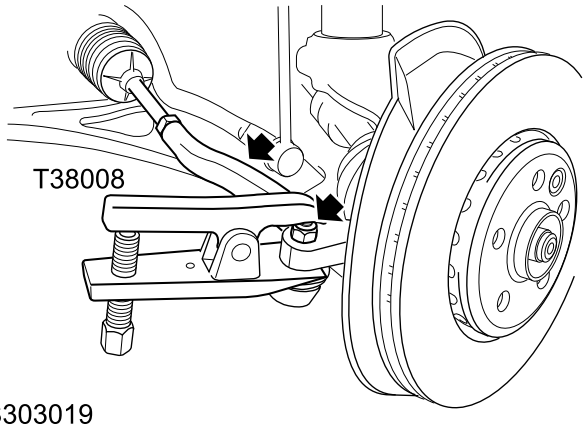

S303019

6. Remove the nuts from the ball joint of the steering tie rod.
7. Remove the nuts fixing the connecting rod of the horizontal stabilizer bar to the horizontal stabilizer bar and release the connecting rod.
8. Remove the nut fixing the front wheel hub to the front lower swing arm.

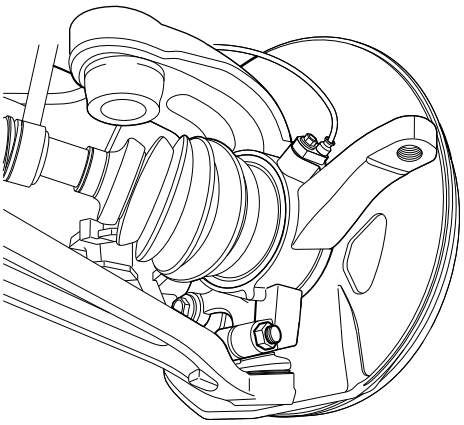

S9410019

9. Remove the outer ball joint of the front lower swing arm with the **T32011**.
10. Be careful not to damage the outer ball joint rubber bushing of the front lower swing arm.
11. Fit the outer ball joint **T32003** of the front lower swing arm.
12. Pull the wheel hub outward and remove the right front axle shaft assembly from the wheel hub.
13. Remove 3 bolts fixing the axle shaft bracket to the cylinder block.

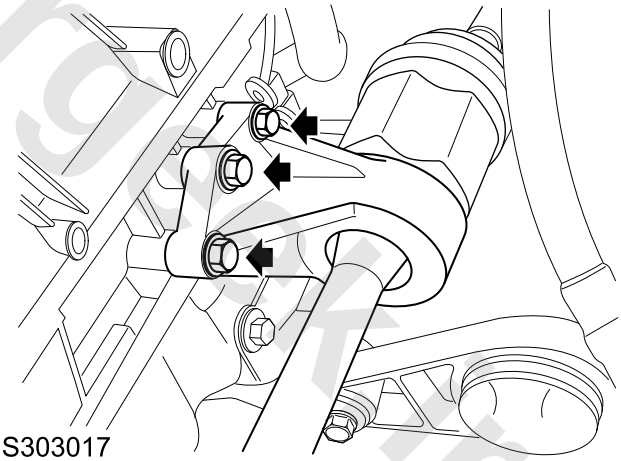

S303017

14. Disconnect the right front axle shaft assembly from the differential.

Refit

1. Clean the connection of the right front axle shaft end, wheel hub and inner differential.
2. Fit the right front axle shaft to the differential and ensure full engagement.
3. Clean the contact surface of the axle shaft bracket and cylinder block.
4. Fit the bolt fixing the axle shaft bracket to the cylinder block and tighten to **42–48Nm**.
5. Remove the ball joint **T32003** of the front lower swing arm.
6. Pull the wheel hub outward, allow the right front axle

www.cargeek.ir

shaft to engage the wheel hub spline, fit the wheel hub to the outer ball joint of the lower swing arm.

7. Fit the nut fixing the wheel hub to the lower swing arm, and tighten to **95±10Nm**.
8. Ensure full engagement of the ball joint pin of the lower swing arm and wheel hub, and the bolt is in the groove of the ball joint connector.
9. Ensure the steering tie rod ball joint and steering arm are clean, and the rubber shield is not damaged.
10. Fit the steering tie rod to the steering arm, and tighten the nuts to **40–50Nm**.
11. Ensure the contact surface of the horizontal stabilizer bar and horizontal stabilizer bar connecting rod is clean.
12. Locate the connecting rod of the horizontal stabilizer bar to the horizontal stabilizer bar, fit the nuts and tighten to **50–65Nm**.
13. Fit the new axle shaft nut and tighten to **350–370Nm**.
14. Lock the nut to the right front axle shaft.
15. Fit the front wheel fender assembly.

Front Wheelhouse Liner - Refit

16. Lower the vehicle.

Right Rear Axle Shaft Assembly

Remove

1. Raise the vehicle.
2. Remove the fender board assembly of the rear wheel.

Rear Wheel House Liner - Remove

3. Pry up the nut locking device of the right rear axle shaft, depress the brake pedal, remove and discard axle shaft nut.
4. Remove the bolt and nut fixing the rear lateral push rod to the wheel bracket, and release the rear lateral push rod.
5. Remove 3 bolts fixing the rear blade trailing arm to the wheel bracket, and release the rear blade trailing arm.

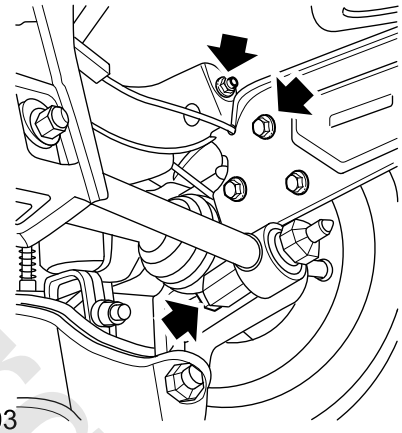

S9410003

6. Remove the bolt and nut fixing the rear upper swing arm to the wheel bracket, and release the rear upper swing arm.
7. Remove the bolt and nut fixing the shock absorber to the wheel bracket, and release the shock absorber.
8. Pull the wheel hub outward to remove the right rear axle shaft assembly from the wheel hub.
9. Disconnect the right rear axle shaft assembly from the differential with the **T30001**.
10. Remove the right rear axle shaft assembly.
11. Remove and discard the axle shaft circlip.

Refit

1. Fit the circlip into the axle shaft.
2. Clean the end of the axle shaft, mounting location of the wheel hub and junction of the differential.
3. Fit the right rear axle shaft to the differential and ensure full engagement.
4. Pull the wheel hub outwards and allow the axle shaft to engage the wheel hub.
5. Fix the shock absorber to the wheel bracket, fit the nut and tighten to **75–90Nm**.
6. Fix the rear upper swing arm to the wheel bracket, fit the nut and tighten to **50Nm+90°**.

www.cargeek.ir

7. Fix the rear blade trailing arm to the wheel bracket, fit 3 bolts and tighten to **60±5Nm**.
8. Fix the rear tie rod to the wheel bracket, fit the nut and tighten to **130Nm+90°**.
9. Fit the new axle shaft nut and tighten to **350–370Nm**.
10. Lock the nut to the right rear axle shaft.
11. Fit the fender board assembly of the rear wheel.

☞ **Rear Wheel House Liner - Refit**

12. Lower the vehicle.

Left Front Axle Shaft Assembly

Remove

1. Raise the vehicle.
2. Remove the front wheel fender assembly.

☞ **Front Wheelhouse Liner Remove**

3. Pry up the nut locking device of the front axle shaft, depress the brake pedal, remove and discard axle shaft nut.

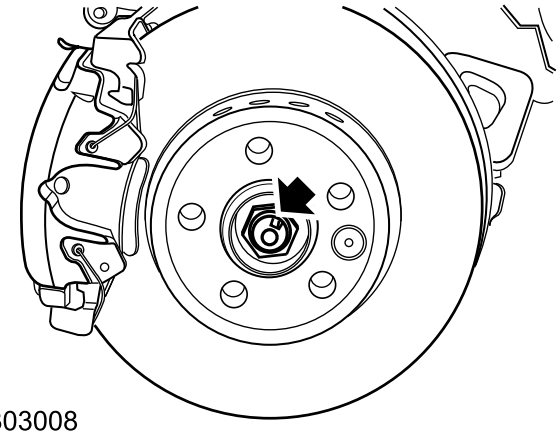

S303008

4. Unscrew the steering tie rod nut, fit a M10 nut to the steering tie rod ball joint and ensure the nut is aligned with the end of the ball pin.
5. Release the ball joint of the steering tie rod with the **T38008**.

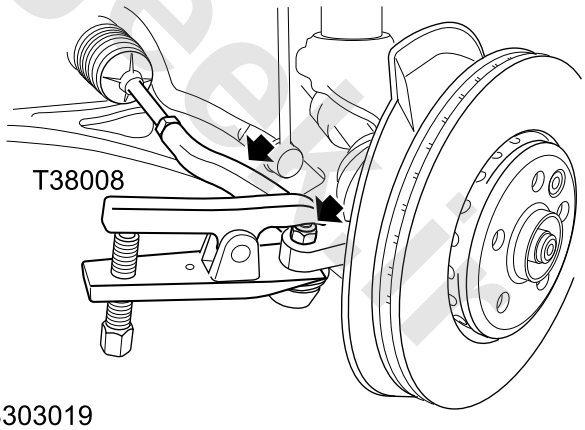

S303019

6. Remove the nuts from the ball joint of the steering tie rod.
7. Remove the nuts fixing the connecting rod of the horizontal stabilizer bar to the horizontal stabilizer bar and release the connecting rod.
8. Remove the nut fixing the front wheel hub to the front lower swing arm.
9. Remove the outer ball joint of the front lower swing arm with the **T32011**.
10. Be careful not to damage the outer ball joint rubber bushing of the front lower swing arm.

www.cargeek.ir

11. Fit the outer ball joint **T32003** of the front lower swing arm.
12. Pull the wheel hub outward and remove the left front axle shaft assembly from the wheel hub.
13. Disconnect the left front axle shaft from the differential with the **T30001**.

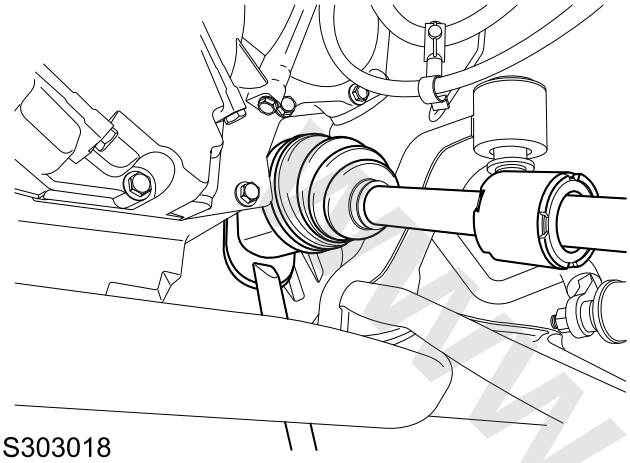

S303018

14. Remove the left front axle shaft assembly.
15. Remove and discard the axle shaft circlip.

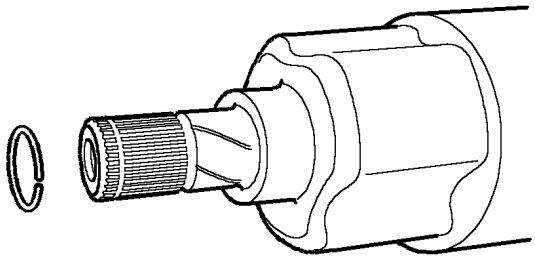

S303012

Refit

1. Fit the circlip into the left front drive half shaft.
2. Clean the end of the drive half shaft, mounting location of the wheel hub and junction of the differential.
3. Fit the left front drive half shaft to the differential and ensure full engagement.
4. Remove the outer ball joint **T32003** of the front lower swing arm.
5. Pull the wheel hub outward, allow the left front drive half shaft to engage the wheel hub, and fit the wheel hub into the outer ball joint of the lower swing arm.
6. Fit the nut fixing the wheel hub to the lower swing arm, and tighten to **95±10Nm**.
7. Ensure full engagement of the lower swing arm outer ball joint and the wheel hub, and the bolt is located at the groove of the outer ball joint connector.
8. Ensure the contact surface of the horizontal stabilizer bar and horizontal stabilizer bar connecting rod is clean.
9. Locate the connecting rod of the horizontal stabilizer bar to the horizontal stabilizer bar, fit the nuts and tighten to **50–65Nm**.
10. Ensure the steering tie rod and steering arm are clean, and the rubber shield is not damaged.
11. Fit the steering tie rod into the steering arm and tighten the nuts to **40–50Nm**.
12. Fit the new drive half shaft nut and tighten to **350–370Nm**.
13. Lock the nut to the left front drive half shaft.
14. Fit the front wheel fender assembly.

Front Wheelhouse Liner - Refit

15. Lower the vehicle.

www.cargeek.ir

Left Rear Axle Shaft Assembly

Remove

1. Raise the vehicle.
2. Remove the fender board assembly of the rear wheel.

☞ **Rear Wheel House Liner - Remove**

3. Pry up the nut locking device of the left rear axle shaft, depress the brake pedal, remove and discard axle shaft nut.
4. Remove the bolt and nut fixing the rear tie rod to the wheel bracket, and release the rear tie rod.
5. Remove 3 bolts fixing the rear blade trailing arm to the wheel bracket, and release the rear blade trailing arm.

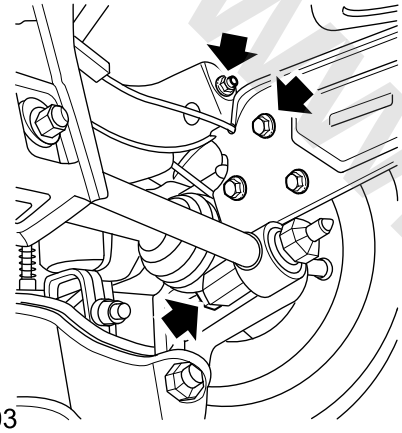

S9410003

6. Remove the bolt and nut fixing the rear upper swing arm to the wheel bracket, and release the rear upper swing arm.
7. Remove the bolt and nut fixing the shock absorber to the wheel bracket, and release the shock absorber.
8. Pull the wheel hub outward to remove the left rear axle shaft assembly from the wheel hub.
9. Disconnect the left rear axle shaft assembly from the differential with the **T30001**.
10. Remove the left rear axle shaft assembly.
11. Remove and discard the axle shaft circlip.

Refit

1. Fit the circlip into the axle shaft.
2. Clean the end of the axle shaft, mounting location of the wheel hub and junction of the differential.
3. Fit the left rear axle shaft to the differential and ensure full engagement.
4. Pull the wheel hub outwards and allow the axle shaft to engage the wheel hub.
5. Fix the shock absorber to the wheel bracket, fit the nut and tighten to **75–90Nm**.
6. Fix the rear upper swing arm to the wheel bracket, fit the nut and tighten to **50Nm+90°**.
7. Fix the rear blade trailing arm to the wheel bracket, fit 3 bolts and tighten to **60±5Nm**.
8. Fix the rear tie rod to the wheel bracket, fit the nut and tighten to **130Nm+90°**.
9. Fit the new axle shaft nut and tighten to **350–370Nm**.
10. Lock the nut to the left rear axle shaft.
11. Fit the fender board assembly of the rear wheel.

☞ **Rear Wheel House Liner - Refit**

12. Lower the vehicle.

www.cargeek.ir

www.cargeek.ir

Rear Drive Shaft

Remove

1. Raise the vehicle.
2. Support the drive shaft with the jack.
3. Remove 6 bolts fixing the drive shaft to the PTU.

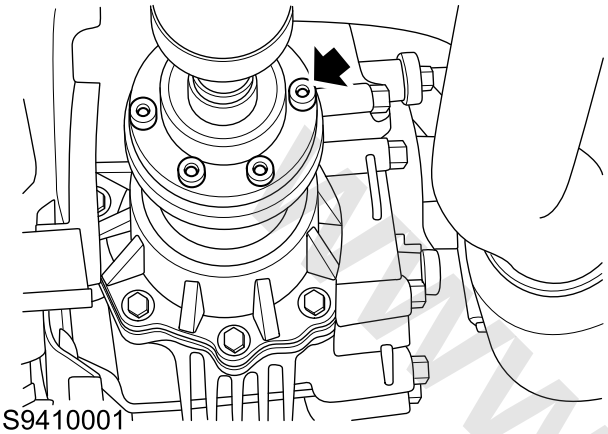

4. Remove 2 bolts fixing the drive shaft to the body.

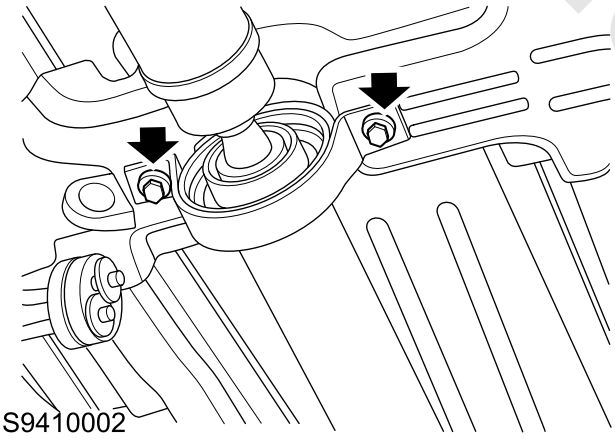

5. Remove 6 bolts fixing the drive shaft to the rear axle.

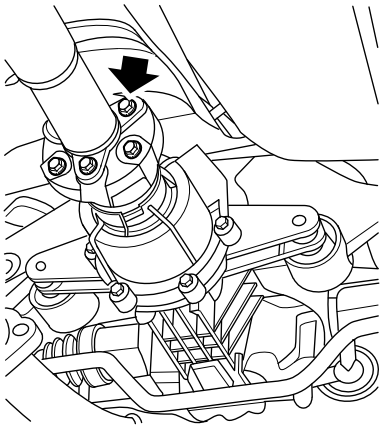

6. Slowly lower the jack and remove the front drive shaft assembly.

Refit

1. Place the new drive shaft assembly on the jack and slowly lift it to an appropriate position.
2. Fit 6 bolts fixing the drive shaft to the rear axle, and tighten to **55–61Nm**.
3. Fit 2 bolts fixing the drive shaft to the body, and tighten to **55–65Nm**.
4. Fit 6 bolts fixing the drive shaft to the PTU, and tighten to **26–34Nm**.
5. Remove the jack.
6. Lower the vehicle.

www.cargeek.ir

www.cargeek.ir

Constant Velocity Joint Assembly

Remove

1. Remove the drive shaft assembly.

Right Drive Shaft Assembly

2. Fix the drive shaft with the vise.
3. Release and abandon two clamps of the assembly sheath.

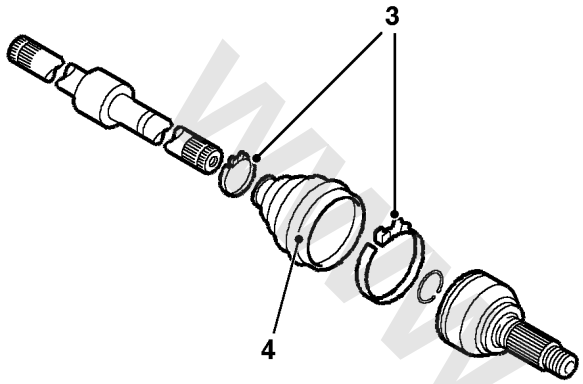

S303013

4. Glide the assembly sheath along the drive shaft so as to see the inside of the constant velocity universal joint.
5. Clamp the wire circlip of the constant velocity universal joint with nipper pliers and remove the constant velocity joint assembly from the drive shaft.

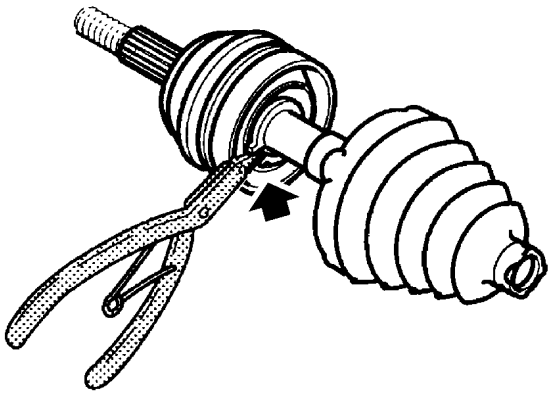

S303014

6. Remove the wire circlip from the drive shaft and abandon it.

Refit

1. Clean the drive shaft and its sleeve.
2. Fit new circlip to the drive shaft.
3. Locate the new constant velocity joint assembly to the drive shaft, press the circlip into the groove with an appropriate tool and fully push the constant velocity joint into the drive shaft.
4. Apply grease to the constant velocity joint assembly.
5. Locate the sleeve to the constant velocity joint and fix it with new clamps.
6. Fit the drive shaft assembly.

Right Drive Shaft Assembly

www.cargeek.ir

Constant Velocity Joint Assembly Sleeve

Remove

1. Remove the constant velocity joint assembly.

Constant Velocity Joint Assembly

2. Remove the constant velocity joint assembly sleeve from the drive shaft.
3. Remove and discard the steel wire snap ring of the constant velocity joint.

Refit

1. Clean the drive shaft.
2. Fit the new constant velocity joint assembly sleeve and 2 new clamps to the drive shaft.
3. Fit the constant velocity joint assembly.

Constant Velocity Joint Assembly

Tripod Joint Assembly

Remove

1. Remove the drive shaft assembly.

Right Drive Shaft Assembly

2. Fit the drive shaft clip to the vise.
3. Loosen and discard 2 clamps.

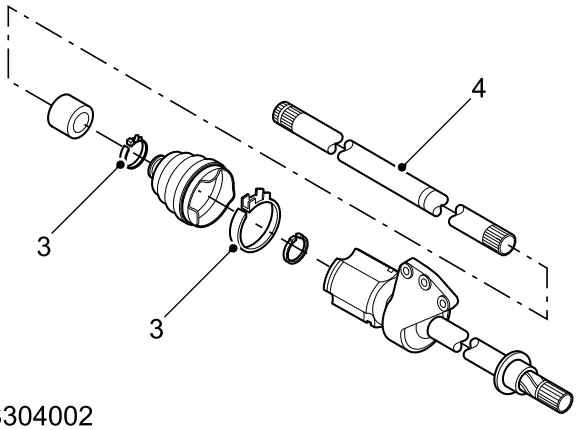

S304002

4. Remove the intermediate shaft of the drive shaft.
5. Remove and discard the wire circlip of the drive shaft intermediate shaft.
6. Remove the tripod joint from the drive shaft intermediate shaft.

Refit

1. Clean the drive shaft and tripod joint assembly sleeve.
2. Fit 2 new clamps to the drive shaft.
3. Locate the new tripod joint to the drive shaft.
4. Fit the new wire snap ring to the intermediate shaft of the drive shaft.
5. Apply grease to the interior of the tripod joint assembly.
6. Fix the tripod joint assembly sleeve to the drive shaft.
7. Fit the drive shaft assembly.

Right Drive Shaft Assembly

www.cargeek.ir

Tripod Joint Assembly Sleeve

Remove

1. Remove the constant velocity joint assembly sleeve.

☞ **Constant Velocity Joint Assembly Sleeve**

2. Remove the shock absorption ring of the drive shaft.
3. Loosen two sleeve clips of the tripod joint assembly and remove the tripod joint assembly sleeve from the drive shaft.

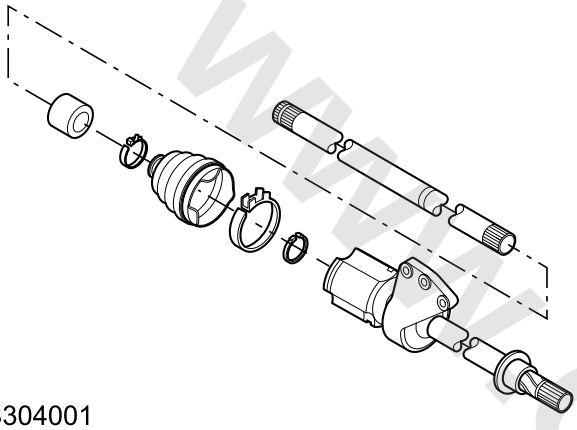

S304001

4. Discard the tripod joint assembly sleeve.

Refit

1. Clean the drive shaft and tripod joint assembly.
2. Apply grease to the interior of the tripod joint assembly.
3. Fit new tripod joint assembly sleeve to the drive shaft and fix it with the new clamps.
4. Lubricate and fit the shock absorption ring of the drive shaft.
5. Make sure the shock absorption ring of the drive shaft is correctly located.
6. Clean the drive shaft and the sleeve of the constant velocity joint assembly.
7. Fit the constant velocity joint assembly sleeve.

☞ **Constant Velocity Joint Assembly Sleeve**

www.cargeek.ir

www.cargeek.ir

www.cargeek.ir

Special Tools

Tool Number	Description	Picture
T38008	Remover ball joint	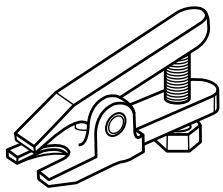 T38008
T32011	Lever front lower arm ball joint	T32011
T32003	Protector - front lower arm ball joint	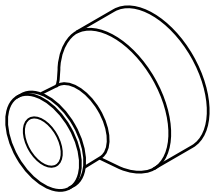 T32003
T30001	Remover drive shaft	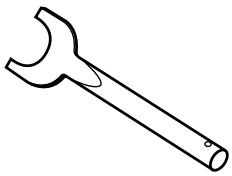 T30001

www.cargeek.ir

www.cargeek.ir

Instrument Panel and Console

Specifications

Torque

Description	Value
Bolt-Fuel filler flab release handle to Fascia	1.3–1.9Nm
Bolt-Fasic Main to Fasic Bracket	19–25 Nm
Bolt-Fasic Bracket to Body	19–25 Nm
Bolt-Console Main to Console front bracket	1.6–2.0Nm
Bolt-Console Main to Console rear bracket	3.0–4.0Nm
Screw-EPB switch to console panel	1.6–2 Nm
Screw-console panel to console	3–5Nm
Screw-upper console switch	1.2–2Nm

www.cargeek.ir

www.cargeek.ir

www.cargeek.ir

Service Procedures

Driver Side Lower Trim Panel Assembly

Remove

1. Disconnect the battery negative.
2. Remove the door frame sealing strip from the left end cover plate of the instrument panel.
3. Remove the left end cover plate of the instrument panel.
4. Remove the oil filler handle and 2 screws.
5. Remove 2 screws securing the front engine cover handle.
6. Remove 2 screws securing the lower trim panel of the instrument panel.

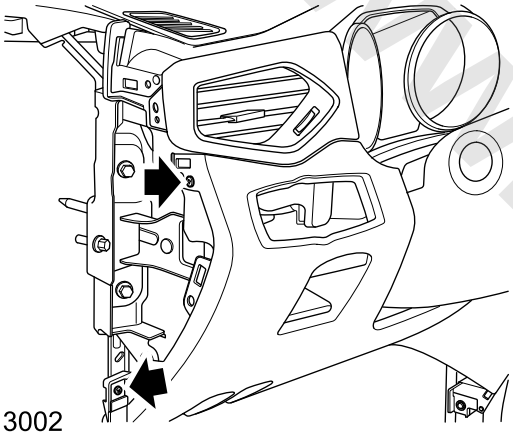

S4113002

7. Remove the lower trim panel clip of the instrument panel.
8. Disconnect 2 harness connectors of the headlamp switch and rearview mirror control switch, and remove the lower trim panel of the instrument panel.

Refit

1. Connect 2 harness connectors of the headlamp switch and rearview mirror control switch, and fit the lower trim panel of the instrument panel.
2. Fit the lower trim panel clip of the instrument panel.
3. Fit 2 screws securing the lower trim panel of the instrument panel , and tighten to**1.3–1.9Nm**.
4. Fit the handle of the front engine cover and 2 screws.
5. Fit the oil filler handle and 2 screws.
6. Fit the left end cover plate of the instrument panel.
7. Fit the door frame sealing strip to the left end cover plate of the instrument panel.
8. Connect the battery negative.

Glove Box Assembly

Remove

1. Open the glove box.
2. Remove 2 stoppers of the glove box.

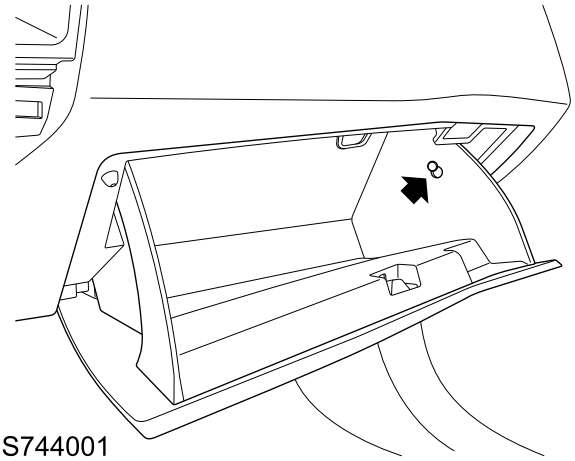

S744001

3. Disconnect the connector of the glove box lamp. (Note: this step is required for vehicles with glove box lamp only.)
4. Remove the glove box.

Refit

1. Fit the glove box to the instrument panel.
2. Connect the connector of the glove box lamp. (Note: this step is required for vehicles with glove box lamp only.)
3. Fit 2 stoppers of the glove box.
4. Close glove box.

www.cargeek.ir

www.cargeek.ir

Instrument Panel (I/P) Assembly

Remove

1. Disconnect the battery ground.
2. Remove the solar sensor.

Solar Sensor Remove

3. Remove center console.

Center Console Assembly Remove

4. Remove the steering wheel assembly.

Steering Wheel Assembly Remove

5. Remove the steering column shield.

Steering Column Shield Remove

6. Remove the combination switch of the center console.

A/C Control Panel Remove

7. Pry open the clip securing the central panel assembly.
8. Disconnect the harness connector of the stop/start switch.
9. Disconnect the central air outlet assembly.
10. Remove the left/right A pillar upper trim panel.

A Pillar Upper Trim Panel Assembly Remove

11. Remove the player.

Player Remove

12. Remove the instrument pack.

Instrument Pack Remove

13. Remove the glove box. (Note: this step is required for vehicles with glove box lamp only.)

Glove Box Assembly Remove

14. Disconnect the passenger side airbag harness connector.
15. Remove 2 bolts securing the passenger side airbag bracket.
16. Disconnect 1 harness connector (Left SRS module).
17. Remove 14 bolts securing the instrument panel.
18. With assistance, remove the instrument panel from the vehicle.

Refit

1. With assistance, fit the instrument pane to the vehicle and locate it to the frame. Ensure the heater pipe and vent pipe are correctly embedded into the heater assembly.
2. Fit 14 bolts fixing the instrument panel to the frame, and tighten the bolt to **19–25 Nm**.
3. Connect 1 harness connector (Left SRS module).
4. Fit 2 bolts securing the passenger side airbag bracket.
5. Connect the passenger side airbag harness connector.
6. Fit the glove box. (Note: this step is required for vehicles with glove box lamp only.)

Glove Box Assembly Refit

7. Fit the instrument pack.

Instrument Pack Refit

8. Fit the player.

Player Refit

9. Fit the left/right A pillar upper trim panel.

A Pillar Upper Trim Panel Refit

10. Fit the central air outlet assembly.
11. Fit the combination switch of the center console.

A/C Control Panel Refit

12. Fit the steering column shield.

Steering Column Shield Refit

13. Fit the steering wheel assembly.

Steering Wheel Assembly Refit

14. Fit the center console.

Center Console Refit

15. Fit the solar sensor.

Solar Sensor Refit

16. Connect the battery negative.

www.cargeek.ir

Instrument Panel Right Trim Panel Assembly

Remove

1. Pull the door frame sealing strip on the right cover plate of the instrument panel.
2. Remove the right cover plate of the instrument panel.
3. Release the clip securing the right central panel assembly.
4. Remove 3 screws securing the right trim panel assembly, and remove the right trim panel assembly.

Refit

1. Fit the right trim panel assembly to the instrument panel and secure with screws. Ensure the vent pipe is properly embedded.
2. Fit the trim panel of the right central panel.
3. Fit the right cover plate of the instrument panel to the instrument panel, and secure with clips.
4. Fit the door frame sealing strip to the right cover plate of the instrument panel.

Instrument Panel Beam Assembly

Remove

1. Remove the instrument panel assembly.

☞ Instrument Panel Assembly Remove

2. Remove the steering column.

☞ Steering Column Assembly Remove

3. Remove 3 nuts securing the left fuse box and remove the fuse box.
4. Remove 2 nuts securing the A/C box assembly on the frame.
5. Remove the clip securing the OBD interface.
6. Disconnect the harness connector of the PEPS antenna.
7. Disconnect the harness connector of the rear air outlet temperature sensor.
8. Disconnect the harness connector of the mode damper servo motor.
9. Disconnect the harness connector of the temperature damper servo motor.
10. Remove 2 nuts securing the remote communication module to remove the module.
11. Remove 14 harness clips of the instrument frame.
12. Remove 9 bolts securing the instrument frame.

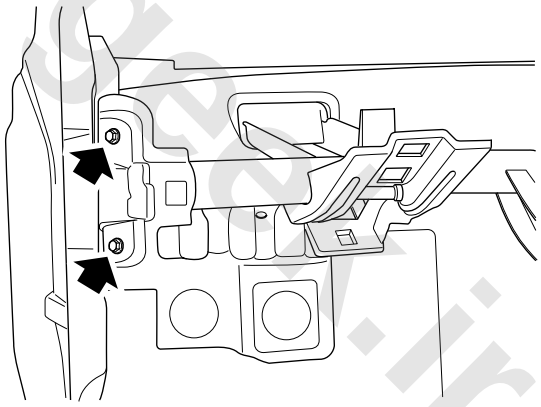

S4113001

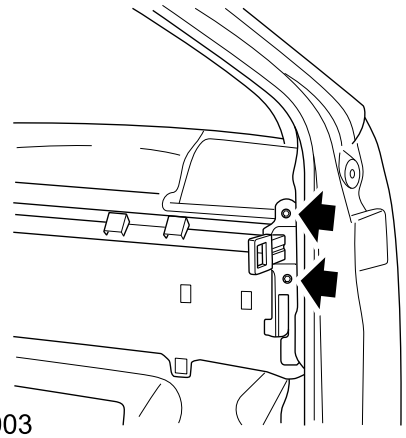

S4113003

www.cargeek.ir

www.cargeek.ir

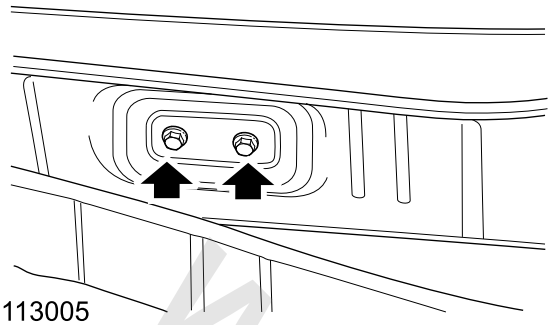

S4113005

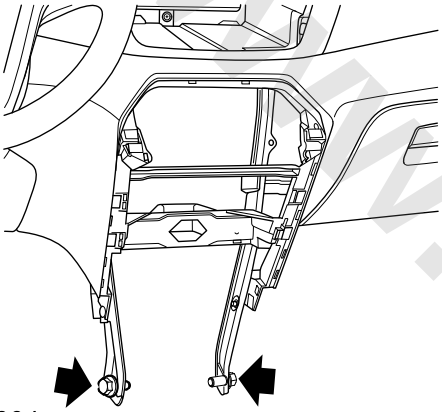

S4113004

13. Remove 2 bolts fixing the instrument panel frame to the launder.
14. Remove the instrument panel beam assembly.

Refit

1. Fit the instrument panel beam assembly.
2. Fit 2 bolts fixing the instrument panel frame to the launder.
3. Fit 9 bolts securing the instrument panel frame and tighten to **19–25 Nm**.
4. Fit 14 harness clips of the instrument frame.
5. Fit the remote communication module and its 2 nuts.
6. Connect the harness connector of the temperature damper servo motor.
7. Connect the harness connector of the mode damper servo motor.
8. Connect the harness connector of the rear air outlet temperature sensor.
9. Connect the harness connector of the PEPS antenna.
10. Fit the clip securing the OBD interface.
11. Fit 2 nuts securing the A/C box assembly on the frame.
12. Fit the fuse box and its 3 nuts.
13. Fit the steering column.

☞ **Steering Column Assembly Refit**

14. Fit the instrument panel assembly.

☞ **Instrument Panel Assembly Refit**

www.cargeek.ir

www.cargeek.ir

Center Console Assembly

Remove

1. Disconnect the battery negative.
2. Remove the bolt trim panel of the left A/C control panel.
3. Remove the bolt trim panel of the right A/C control panel.
4. Remove the A/C control panel.

A/C Control Panel Remove

5. Remove the cigar lighter assembly.

Cigar Lighter Remove

6. Remove the shift knob and gear display panel.

Shift Knob and Gear Display Panel Remove

7. Remove 1 screw securing the left heater closure panel to remove the closure panel.
8. Remove 1 screw securing the left center console.

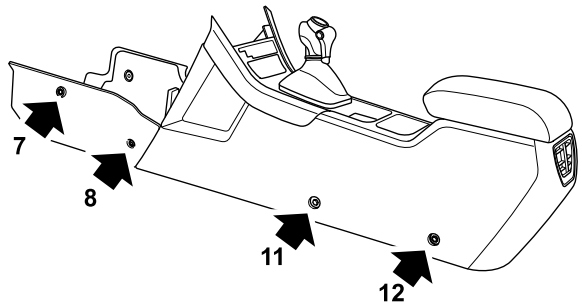

S4123001

9. Remove 1 screw securing the right heater closure panel to remove the closure panel.
10. Remove 1 screw securing the right center console.

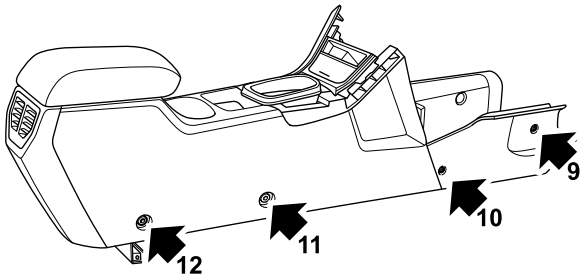

S4123002

11. Remove 2 screws securing the front center console.
12. Remove 2 bolt caps and 2 bolts securing the rear center console.
13. Disconnect 3 harness connectors of the center console to remove the center console.

Refit

1. Connect the harness connector and the 12 power supply.
2. Fix the front part of the center console to the lower instrument panel, fit the bolt and tighten them to **1.6–2.0Nm**.
3. Fix the side of the center console to the mounting bracket, fit the bolt and tighten to **1.6–2.0Nm**.
4. Fit 2 bolts securing the rear of the upper center console, fit the bolt caps and tighten the bolt to **3.0–4.0Nm**.
5. Connect the cigar lighter and fit the shift panel assembly of the center console.
6. Fit the knob and gear display panel of the shift mechanism.

Shift Knob and Gear Display Panel Refit

7. Fit the A/C control panel and connect the harness connector.

A/C Control Panel Refit

8. Fit the bolt trim panel of the left A/C control panel.
9. Fit the bolt trim panel of the right A/C control panel.
10. Connect the battery negative.

www.cargeek.ir

www.cargeek.ir

Instrument Panel Left Trim Panel Assembly

Remove

1. Pull the door frame sealing strip on the left cover plate of the instrument panel.
2. Remove the left cover plate of the instrument panel.
3. Release the clip securing the left central panel assembly.
4. Remove 2 screws securing the left trim panel assembly, and remove the left trim panel assembly.

Refit

1. Fit the left trim panel assembly to the instrument panel and secure with screws. Ensure the vent pipe is properly embedded.
2. Fit the trim panel of the left central panel.
3. Fit the left cover plate of the instrument panel to the instrument panel, and secure with clips.
4. Fit the door frame sealing strip to the left cover plate of the instrument panel.

Insulation Pad of Engine Compartment Heat Shield

Remove

1. Open the engine hood and disconnect the battery negative.
2. Remove the instrument panel assembly.

☞ **Instrument Panel Assembly Remove**

3. Body Harness Remove

☞ **Body Harness Remove**

4. Remove the vacuum booster.

☞ **Vacuum Booster Assembly Remove**

5. Remove the ABS control unit.

☞ **ABS Regulator Remove**

6. Remove the clamp and disconnect the heater water inlet pipe from the heater.
7. Remove the clamp and disconnect the heater water outlet pipe from the heater.
8. Remove 1 bolt fixing the A/C pipe to the TXV.
9. Disconnect the left body harness connector (control module side).
10. Disconnect 3 clips securing the left body harness on the body.
11. Remove 4 nuts securing the insulation pad of the engine compartment heat shield on the front body.
12. Remove the insulation pad of the engine compartment heat shield.

Refit

1. Fit the insulation pad of the engine compartment heat shield.
2. Fit 4 nuts securing the insulation pad of the engine compartment heat shield on the front body.
3. Connect 3 clips securing the left body harness on the body.
4. Connect the left body harness connector (control module side).
5. Fit 1 bolt fixing the A/C pipe to the TXV.
6. Fit the clamp and connect the heater water outlet pipe to the heater.
7. Fit the clamp and connect the heater water inlet pipe to the heater.
8. Fit the ABS control unit.

☞ **ABS Regulator Refit**

9. Fit the vacuum booster.

☞ **Vacuum Booster Assembly Refit**

10. Fit the body harness.

☞ **Body Harness Refit**

www.cargeek.ir

www.cargeek.ir

11. Fit the instrument panel assembly.

Instrument Panel Assembly Refit

12. Connect the battery negative and close the engine hood.

Front Insulation Pad

Remove

1. Remove the A/C box.

Heater Assembly Remove

2. Remove the body harness.

Body Harness Remove

3. Remove the brake pedal bracket.

Pedal Assembly Remove

4. Remove the main carpet.

Carpet Remove

5. Remove 7 nuts securing the front insulation pad.

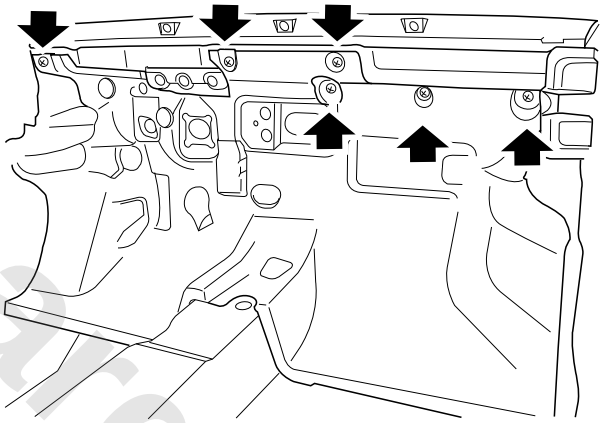

6. Remove the front insulation pad.

Refit

1. Lay the front insulation pad to the corresponding position of the vehicle body, and put the location hole over the locating pin.
2. Fix the front insulation pad to the vehicle body with 6 bolts.
3. Fit the main carpet.

Floor Carpet Refit

4. Fit the brake pedal.

Pedal Assembly Refit

5. Fit the body harness.

Body Harness Refit

6. Fit the A/C box.

Heater Assembly Refit

www.cargeek.ir

www.cargeek.ir

Center Console Combination Switch

Remove

1. Disconnect the battery negative.
2. Pry open the molding on both sides of the center console and remove the molding.
3. Remove 2 screws fixing the center console panel to the center console.

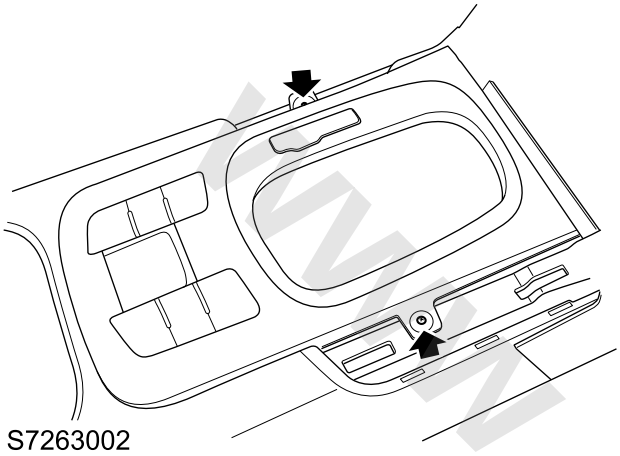

S7263002

4. Remove 4 screws fixing the shift lever bushing to the lower center console panel, and take away the shift lever bushing.
5. Disconnect the switch harness connector of the lower left center console, press 3 clips of the lower left center console switch to remove the switch.
6. Disconnect the harness connector of the **EPB** switch, remove the 2 screws fixing the **EPB** switch to the center console and remove the **EPB** switch.

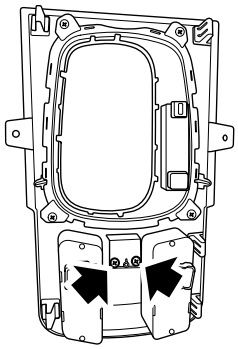

S7263003

7. Disconnect the switch harness connector of the right center console, press 3 clips to remove the switch.

Refit

1. Fit the left/right modules of the combination switch to the center console panel through the back of the shift panel, and ensure the clip is properly fitted.
2. Secure the **EPB** module on the center console panel, fit 2 screws and tighten to **1.6–2 Nm**.
3. Connect the 3 module harness connectors respectively.
4. Fix the shift lever bushing to the center console panel, fit 4 screws and tighten them.
5. Fix the center console panel to the center console, then fit and tighten 2 screws to **3–5Nm**.
6. Fit the molding on both sides of the center console.
7. Connect the battery negative.

www.cargeek.ir

www.cargeek.ir

Combination Switch of Upper Center Console

Remove

1. Remove the A/C entertainment control panel.

☞ **A/C Control Panel Remove**

2. Remove 2 screws fixing the combination switch of the upper center console to the back of the A/C entertainment control panel, and remove the combination switch of the upper center console.

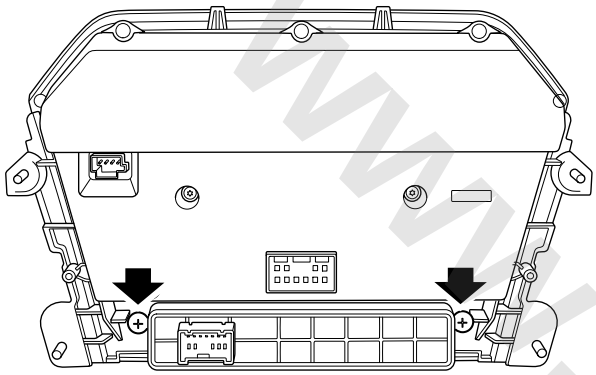

S7263004

Refit

1. Fix the combination switch of the upper center console to the back of the center console entertainment panel, fit 2 screws and tighten to **1.2–2Nm**.
2. Fit the A/C entertainment control panel.

☞ **A/C Control Panel Refit**

www.cargeek.ir

www.cargeek.ir

www.cargeek.ir

Seat

Specifications

Torque

Description	Value
Bolt - front seat to body	40–50Nm
Bolt - squab to cushion	40–50Nm
Screw - rear seat to body	40–50Nm
Bolt - squab to cushion	40–50Nm

www.cargeek.ir

www.cargeek.ir

www.cargeek.ir

Description and Operation

System Layout

Seat Layout

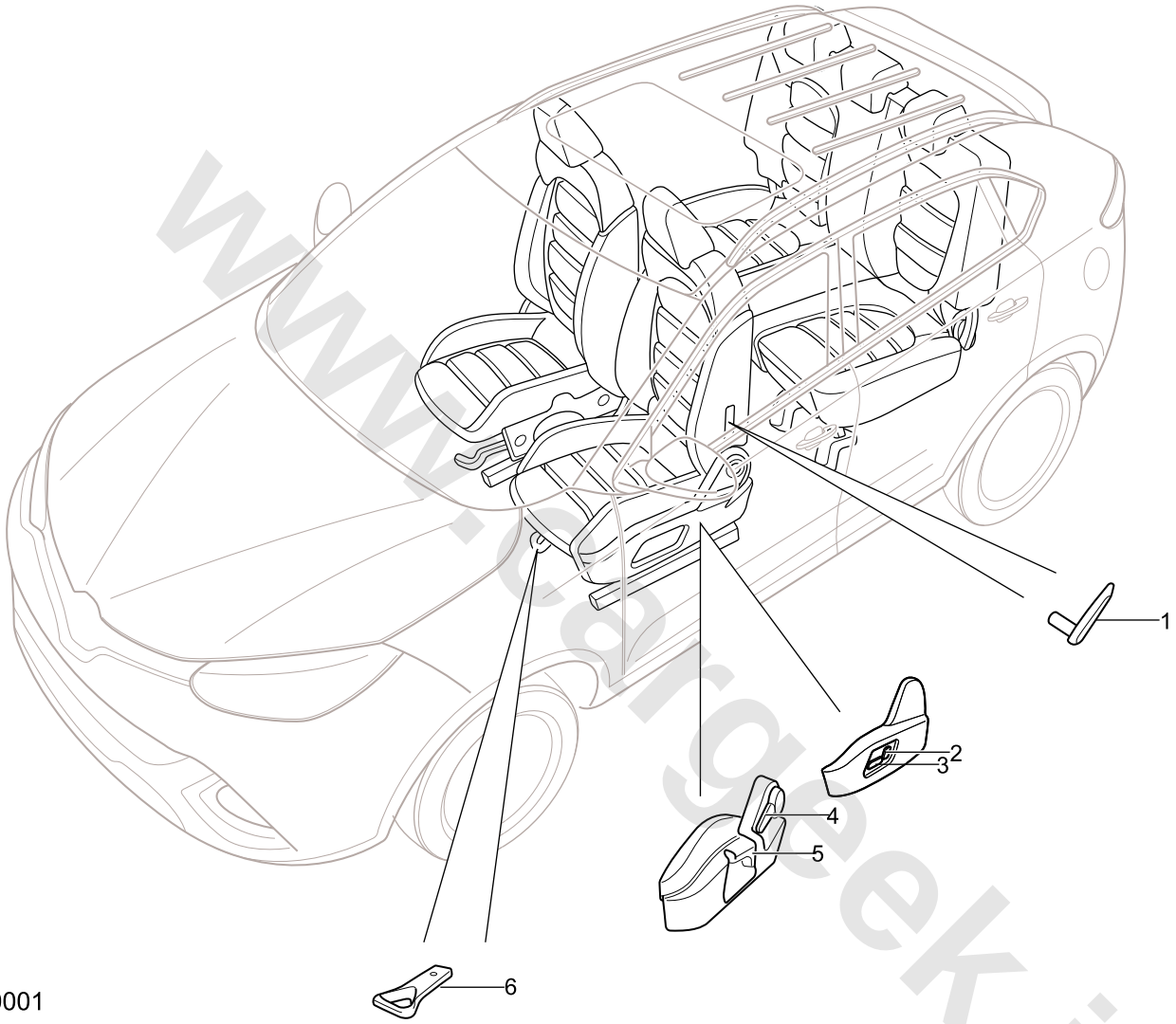

1. Seat Lumbar Support Adjusting Handle (if equipped)
2. Seat Back Adjusting Switch (for power seat)
3. Seat Horizontal Position/Height Adjusting Switch (for power seat)
4. Seat Back Adjusting Handle (for manual seat)
5. Seat Height Adjusting Handle (for manual seat)
6. Seat Horizontal Position Adjusting Handle (for manual seat)

www.cargeek.ir

www.cargeek.ir

Power Seat Motor layout

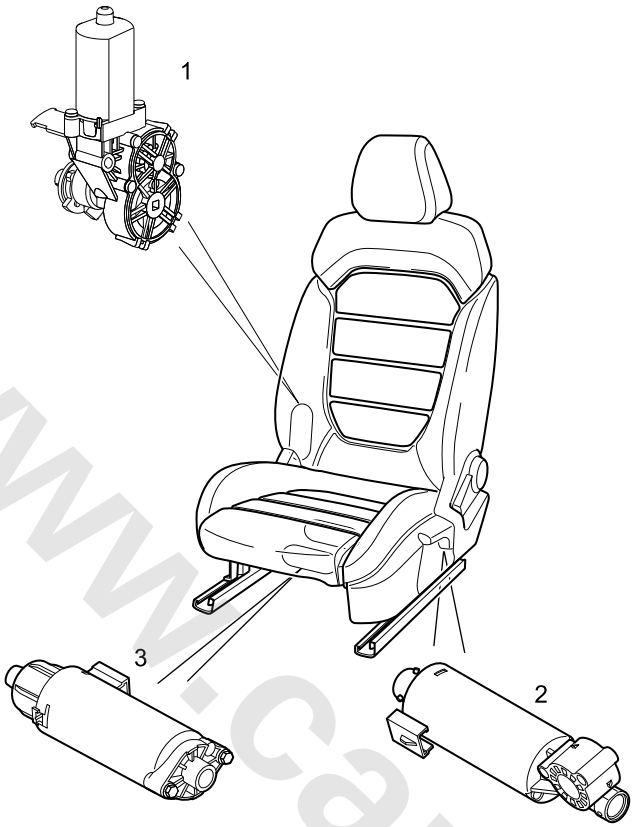

S4210002

1. Seat Back Regulator Motor
2. Seat Height Adjuster Motor
3. Horizontal Seat Motor

www.cargeek.ir

www.cargeek.ir

System Control Diagram

Driver Power Seat Control Diagram

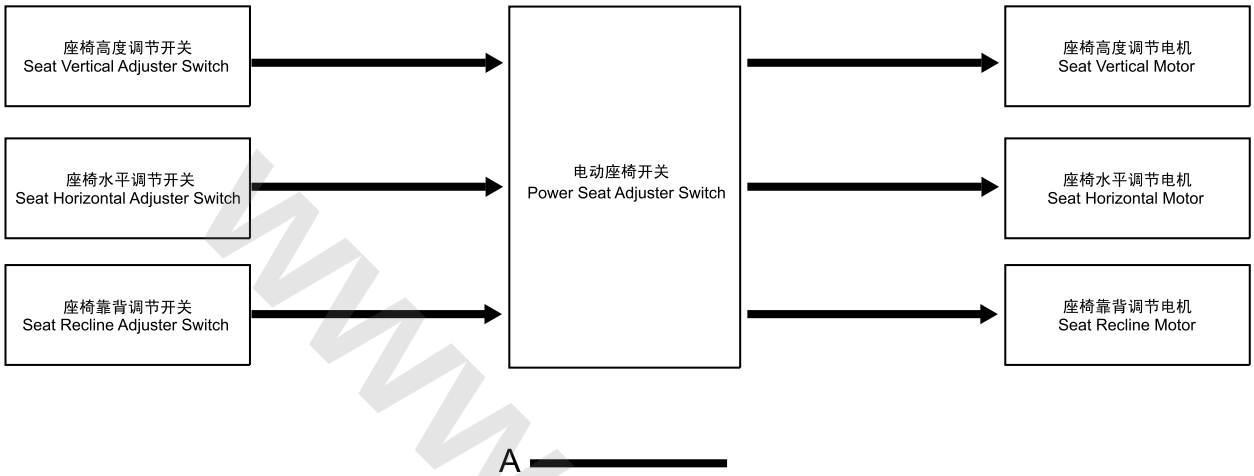

S4211001

A = Hard Wire

www.cargeek.ir

www.cargeek.ir

www.cargeek.ir

Description

Driver Seat Assembly

The driver seat assembly may have different configurations according to vehicle configuration and seat exterior, for example, 6 way manual/power seat (forward/backward adjustment, seat back inclination, seat height and optional lumbar support adjustment); fabric of high quality or leather; optional side airbag (the middle of the rear seat for this vehicle is also fitted with a headrest).

Front Passenger Seat Assembly

The front passenger seat assembly may have different configurations according to vehicle configuration and seat exterior, for example, 4 way seat (forward/backward adjustment, seat back inclination adjustment); manual seat, fabric of high quality or leather, optional side airbag.

Rear Seat Assembly

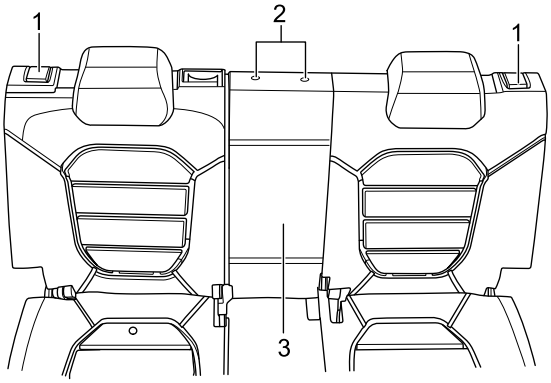

S4213001

1. Release Lever of Rear Seat Back Assembly
2. Middle Headrest
3. Central Armrest (if fitted)

The rear seat of the vehicle is an independent seat, like the front seat headrest, the height of the rear seat headrest can also be adjusted; the inclination of the rear seat back assembly can be adjusted to a certain angle by pulling the release lever of the rear seat back assembly.

www.cargeek.ir

www.cargeek.ir

Operation

Manual Seat

1. Seat Longitudinal Position Adjusting Handle
2. Seat Height Adjusting Handle (if equipped)
3. Seat Back Adjusting Handle
4. Seat Lumbar Support Adjusting Handle (if equipped)

Manual seats can be adjusted by the handle according to individual needs.

The front/rear position of the seat can be adjusted by the handle in the front of the seat. Lift the handle and pull it to the desired position. Release the longitudinal position adjusting handle to lock the seat to the selected position. The 2nd adjusting handle is located in the front of the trim panel outside the seat cushion, which can adjust the seat height. Lift or press the height adjusting handle repeatedly to raise or lower the seat. The 3rd adjusting handle is located in the rear of the height adjusting handle, which can adjust the backrest inclination. Pull up the seat back adjusting handle to release the back. Then the back can be moved back and forth according to the need. Release the back adjusting handle to lock the seat back to the selected position. A rotary handle is fitted on the lower side of the exterior driver seat back, which is used for adjusting the lumbar support of the seat back. Rotation the lumbar support handle will pull the cable connected with the ribbed lumbar support. When pulling the cable, the lumbar support will deviate from its original position and adjust the push-out height.

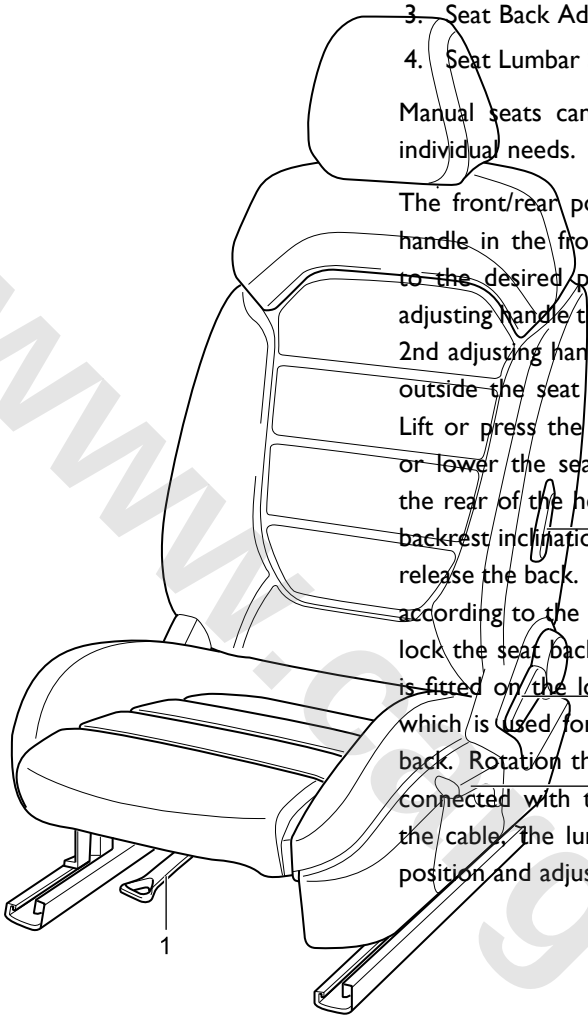

S4213002

www.cargeek.ir

www.cargeek.ir

Power Seat

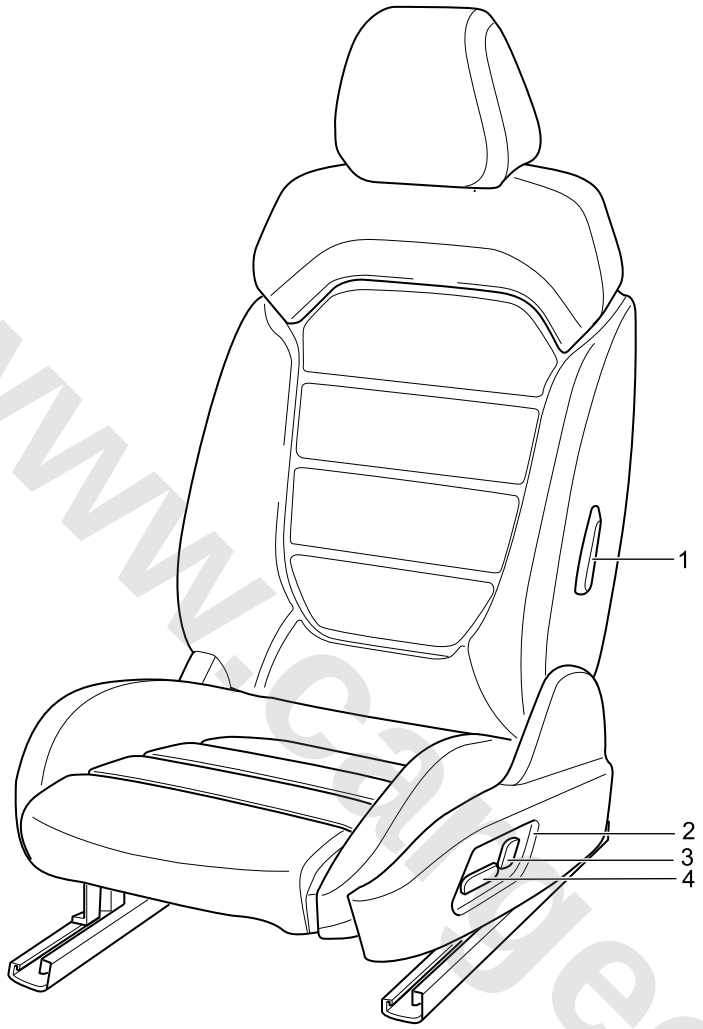

S4213003

1. Seat Lumbar Support Adjusting Handle
2. Driver Seat Switch Assembly
3. Seat Back Adjusting Switch
4. Seat Longitudinal Position/Height Adjusting Switch (4-channel switch)

The power driver seat can be adjusted by the driver seat switch assembly on the trim panel outside the seat cushion according to the individual needs. This seat can be moved back/forth, and the height and angle of the back inclination can also be adjusted electrically. The lumbar support is always manually controlled. The seat can be adjusted when the ignition switch is in the 2nd gear. The power of the power seat is provided by the **BCM** fuse 19 (30A). The axial motion of the seat is controlled by the driver seat switch assembly on the trim panel outside the seat cushion. The switch assembly contains a 2-channel switch which controls the forward/backward inclination of the seat back and a 4-channel switch which controls the height and forward/backward location of the seat. Each motor can receive a 12 power supply from the switch box and connect the ground. The power will enter into the selected motor and drive it to work according to different requirements. When the seat achieves its maximum position for any direction, the thermal protection cut-off switch will protect the motor by cutting off the power supply automatically.

Seat Heating Module (if equipped)

Seat heating is controlled by a single switch under the A/C control assembly of the central panel (see the system layout in the "Heating, Ventilation and Air Conditioning" section). When the heater works, the corresponding switch will illuminate. The seat heating element works only when the engine is working. Each heating element is controlled by an electro-thermal sensor. When operating the switch, the seat cushion will heat up; once the surface temperature of the seat reaches about 42°C, the thermometer inside the system will keep the temperature of the seat by disconnecting or connecting the power supply according to the temperature.

www.cargeek.ir

Service Procedures

Front Seat Assembly

Remove

Warning: Refer to "Warning of airbag system".

1. Adjust the seat to the rearmost location.
2. Remove 2 bolts from the front of the seat guide rail and discard the bolts.

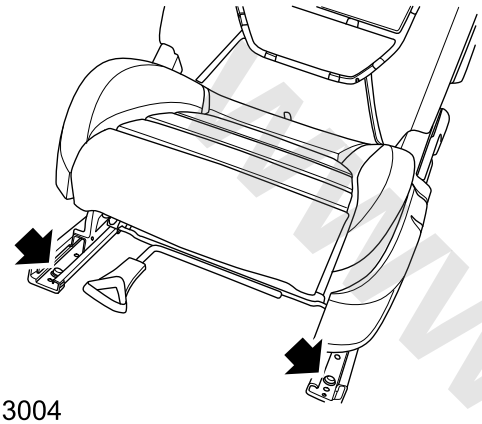

S4213004

3. Adjust the seat to the forefront.
4. Remove 2 bolts from the back of the seat guide rail and discard the bolts.

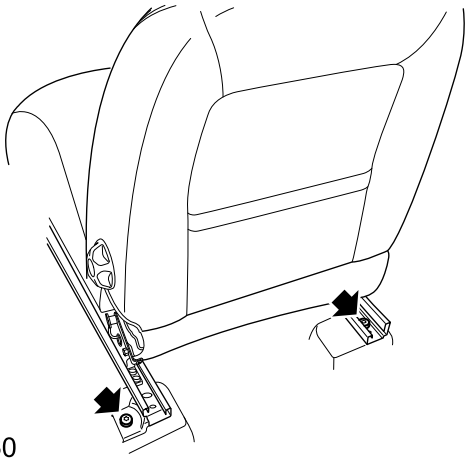

S683060

5. Disconnect the battery negative.
6. Disconnect the seat belt buckle and the plug of the side airbag module connector and power seat harness connector (if equipped), etc.

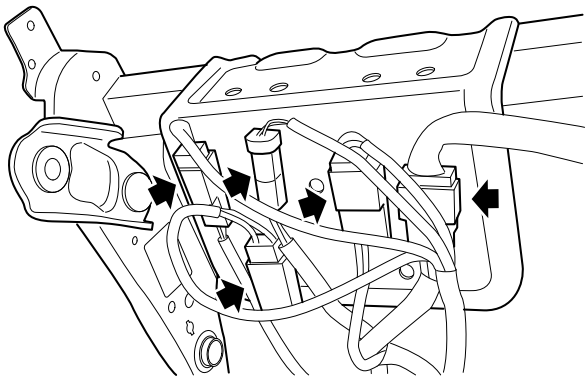

7. Remove the seat from the vehicle.

Refit

1. Ensure the seat guide rail is properly aligned with the body floor, and locate the front seat to the vehicle.
2. Connect the seat belt buckle and the plug of the side airbag module connector and power seat harness connector (if equipped), etc.
3. Fix the seat to the vehicle, fit 2 new bolts to the rear of the seat guide rail, tighten the bolt to **40–50Nm** and check the torque.
4. Fully move the seat backward.
5. Fit 2 new bolts to the front of the seat guide rail, tighten the bolt to **40–50Nm** and check the torque.
6. Connect the battery negative.

www.cargeek.ir

www.cargeek.ir

Front Seat Back Foam

Remove

1. Remove the seat back upholstery.

☞ **Front Seat Back Upholstery Remove**

2. Remove the back foam.

Refit

1. Fit the back foam.
2. Fit the back upholstery.

☞ **Front Seat Back Upholstery Refit**

Front Seat Back Upholstery

Remove

1. Remove the front seat.

☞ **Front Seat Assembly Remove**

2. Release the headrest clamp to remove the headrest.
3. Release and remove the 2 headrest pipes (when necessary, damage the upholstery).

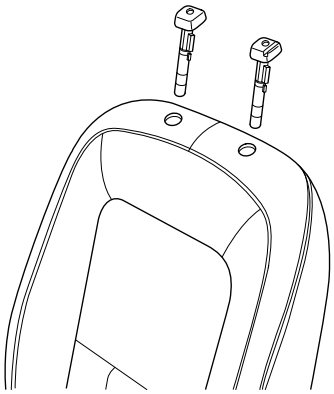

S683050

4. Remove 2 screws fixing the external panel to the seat.
5. Release the clip fixing the the external panel to the seat, and remove the external panel.
6. Remove 1 screws fixing the internal panel to the seat.
7. Release the clip fixing the the internal panel to the seat, and remove the internal panel.
8. Release the clip securing the seat back upholstery.
9. Remove the bolt (totally 4 for both sides) fixing the seat back to the cushion frame, and take away the back.
10. Release the strap of the back upholstery.
11. Mark the location of the C ring, remove the C ring and upholstery.

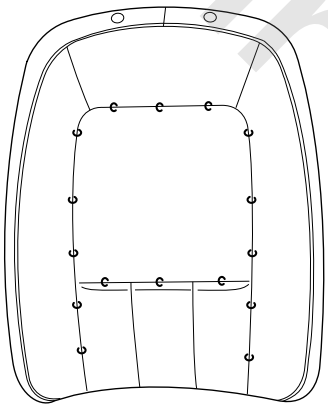

S683038

Refit

1. Fit the back upholstery to the back and secure with C rings.
2. Fix the strap of the back upholstery.

www.cargeek.ir

www.cargeek.ir

3. Locate the back and cushion, fit 4 bolts, tighten to **40–50Nm** and check the torque.
4. Fix the back upholstery to the cushion frame with clips.
5. Fit the internal panel and secure with clip and screw.
6. Fit the external panel and secure with clip and screw.
7. Fit the headrest pipe and fix with clips.
8. Fit the headrest.
9. Fit the front seat.

☞ **Front Seat Assembly Refit**

Rear Seat (with central armrest)

Remove

1. Remove the rear seat leg cap, and remove 2 bolts (1) fixing the rear seat to the front body.
2. Slightly lift the rear seat cushion, and remove 2 bolts (2) fixing the rear seat to the central body mounting hole.

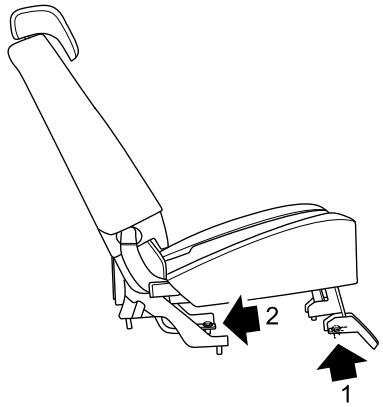

S4213005

3. Remove 1 bolt fixing the central belt of the rear seat to the underbody.
4. Pull the release lever at the top of the seat back to put the rear seat back on the "FOLD" position.
5. Remove 2 bolts fixing the rear seat to the rear body.

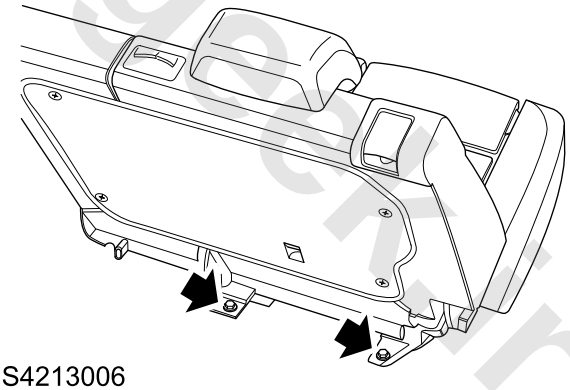

S4213006

6. Remove the rear seat from the vehicle.

Refit

1. Place the rear seat (folded) on the mounting position of the body seat, and locate it with the locating pin of the mounting leg.
2. Fix the mounting hole at the rear side of the seat to the floor, fit 2 bolts, tighten to **40–50Nm**, and fit the screw from inside to outside, then check the torque.
3. Stick the fastening tape on the seat back cover to the tape of the luggage compartment carpet.
4. Lift the rear seat back to the rearmost position and lift the seat cushion to the highest location by pulling the release lever at the top of the seat back.

www.cargeek.ir

5. Fix the 2 bolts to the floor through the mounting hole in the center of the seat, tighten the bolt to **40–50Nm** from inside to outside and check the torque.
6. Put the seat cushion down and keep it level, place the front mounting leg of the seat on the body mounting hole and secure with locating pins.
7. Fix the 2 bolts to the floor through the front mounting hole of the seat, tighten the bolt to **40–50Nm** and check the torque.
8. Fit the rear seat leg cap to the front mounting leg of the rear seat.

Rear Seat Cushion

Remove

1. Remove the rear seat back.

☞ **Rear Seat Back (with central armrest) Remove**

2. Remove the rear seat cushion.

Refit

1. Locate the rear seat cushion and back properly.
2. Fit the rear seat back.

☞ **Rear Seat Back (with central armrest) Refit**

www.cargeek.ir

www.cargeek.ir

www.cargeek.ir

Rear Seat Cushion Upholstery

Remove

1. Remove the rear seat cushion.

☞**Rear Seat Cushion Remove**

2. Loosen the cables and J-clamps fixing the cushion upholstery to the seat frame.
3. Mark the C ring securing the cushion upholstery and foam, and remove it.
4. Remove the upholstery from the cushion foam.

Refit

1. Fit the cushion upholstery and fix it to the cushion foam with C rings.
2. Fix the cushion upholstery to the seat frame with cables and J-clamps.
3. Fit the rear seat cushion.

☞**Rear Seat Cushion Refit**

Rear Seat Cushion Foam

Remove

1. Remove the cushion upholstery.

☞**Rear Seat Cushion Upholstery Remove**

2. Remove the cushion foam.

Refit

1. Fit the cushion foam.
2. Fit the cushion upholstery.

☞**Rear Seat Cushion Upholstery Refit**

www.cargeek.ir

www.cargeek.ir

Rear Seat Back (with central armrest)

Remove

1. Remove the rear seat.

Rear Seat (with central armrest) Remove

2. Remove the rear seat headrest.
3. Remove the screw securing the exterior bracket cover of the rear seat.
4. Remove the bracket cover of the rear seat.
5. Remove the bolt securing the rear seat back and cushion.

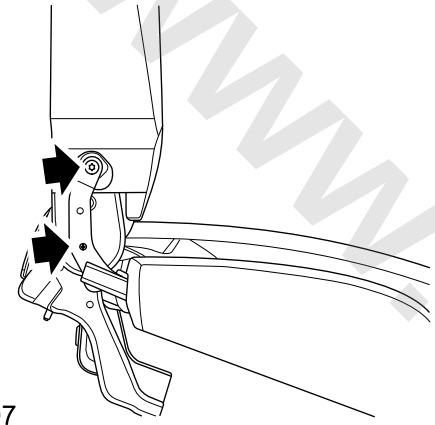

S4213007

6. And repeat the operation for the other side of the seat back.
7. Remove the rear seat back assembly.

Refit

1. Locate the rear seat cushion and back properly.
2. Fit the bolt connecting the rear seat back and cushion, and tighten the bolt.
3. Fit the bracket trim cover of the rear seat back and cushion and the trim cover screw.
4. Fit the rear seat.

Rear Seat (with central armrest) Refit

5. Fit the rear seat headrest.

Rear Seat Back Upholstery

Remove

1. Remove the central armrest of the rear seat.
2. Remove the rear seat back.

Rear Seat Back Remove

3. Release and remove 2 headrest pipes.
4. Remove the screw securing the seat back release lever, disconnect the release lever and cable from the rear seat and remove the seat back release lever.
5. Pull out the elastic clip from the upholstery.
6. Release the clip securing the rear seat back panel and remove it.
7. Remove the C ring securing the rear seat back upholstery.
8. Mark the location of the C ring securing the seat back upholstery and foam, and remove the C ring and upholstery.

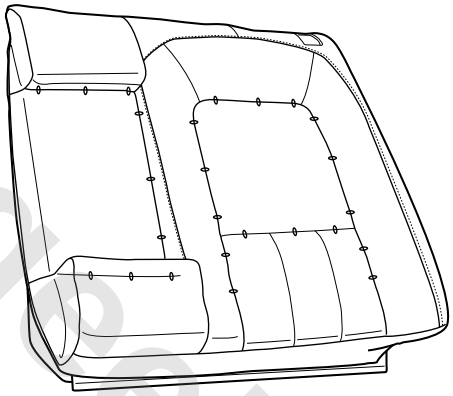

S683029

Refit

1. Align the upholstery with the front of the back foam and secure with C rings.
2. Fit the back to the back frame.
3. Fix the seat back panel to the rear of the back foam with clips.
4. Fix the back upholstery to the rear of the seat back with C rings.
5. Fix the elastic clip of the back upholstery.
6. Secure the release lever of the rear seat back with screws and connect the cable.
7. Fit the headrest pipe and fix with clips.
8. Fit the rear seat back.

Rear Seat Back Refit

9. Fit the central armrest of the rear seat.

www.cargeek.ir

www.cargeek.ir

Rear Seat Back Foam

Remove

1. Remove the seat back upholstery.

☞ **Rear Seat Back Upholstery Remove**

2. Remove the back foam.

Refit

1. Fit the back foam.
2. Fit the back upholstery.

☞ **Rear Seat Back Upholstery Refit**

External Trim Panel - Front Seat

Remove

1. Remove the front driver seat assembly.

☞ **Front Seat Assembly Remove**

2. Remove the screw fixing the external panel to the seat.

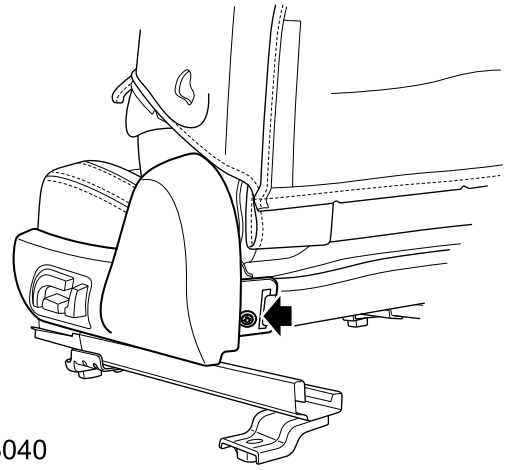

S683040

3. Release the clip fixing the the external panel to the seat, and remove the external panel.
4. Remove the height adjusting handle and back adjusting handle from the external trim panel (manual seat).
5. Remove 3 screws fixing the combination switch to the external panel and take away the external panel (power seat).

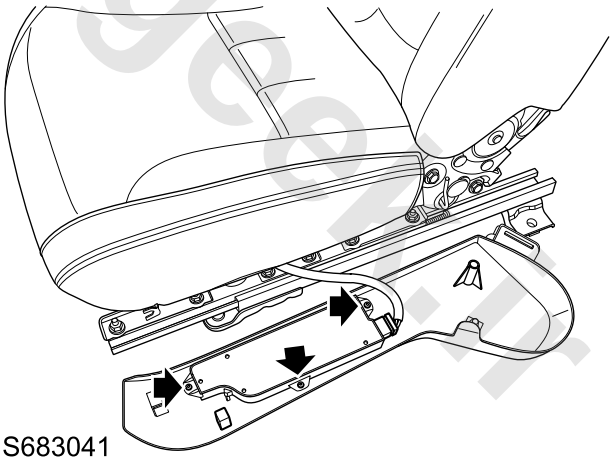

S683041

Refit

1. Fit the combination switch to the outside panel and fasten with screws.
2. Fix the outside panel to the seat with the clips and screws.
3. Fit the front driver seats.

☞ **Front Seat Assembly Refit**

www.cargeek.ir

Front Seat Cushion Upholstery

Remove

1. Lift the seat cushion fully.
2. Remove the external trim panel.

External Trim Panel - Front Seat Remove

3. Remove the screw fixing the internal trim panel to the seat.

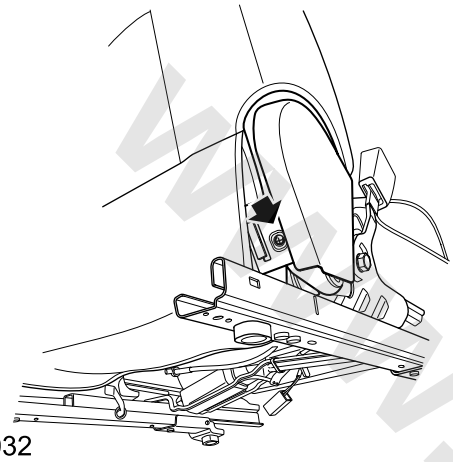

S683032

4. Release the clip and remove the internal trim panel.

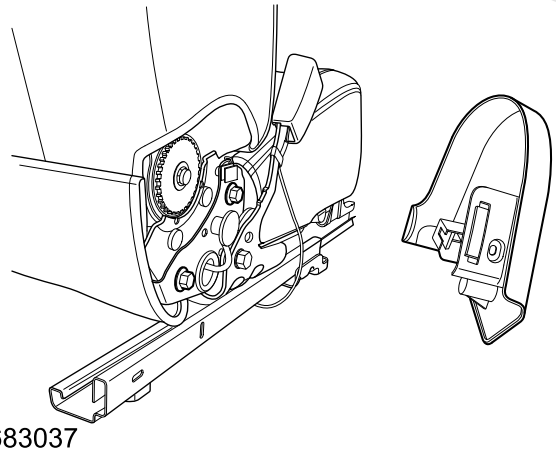

S683037

5. Release the clip fixing the seat back upholstery to the seat cushion frame.

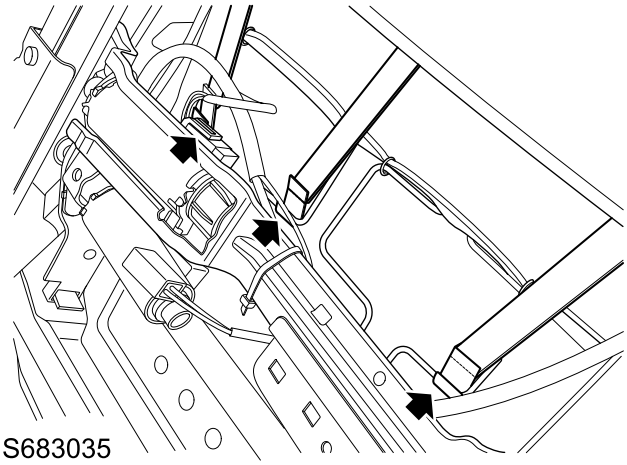

S683035

6. Disconnect the back harness connector.
7. Remove the bolt (totally 4 for both sides) fixing the seat back to the cushion frame, and take away the seat cushion.

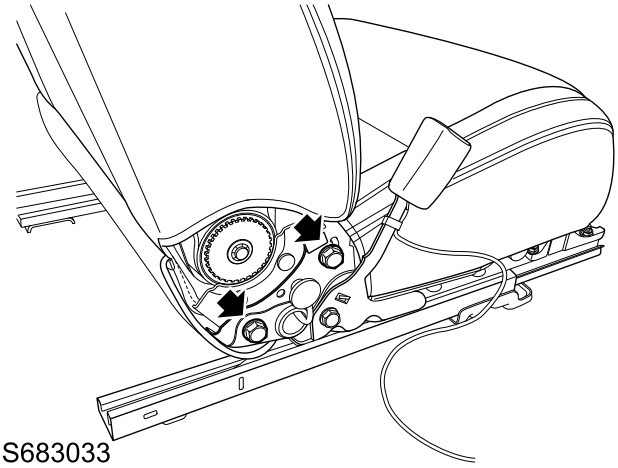

S683033

8. Remove the C ring and release the strap fixing the seat cushion upholstery to the seat cushion frame.
9. Release the seat cushion foam from the seat cushion frame and remove the foam.
10. Release the elastic band and remove the C ring fixing the seat cushion upholstery to the seat cushion foam.

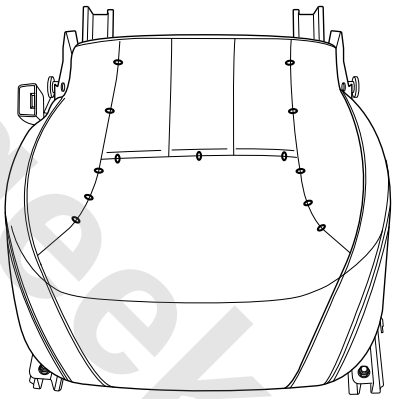

S683049

11. Remove the seat cushion upholstery.

Refit

1. Fit the seat cushion foam into the seat cushion upholstery and secure with elastic band and C ring.
2. Fit the seat cushion foam with upholstery to seat cushion frame, and secure the seat cushion upholstery with strap and C ring.
3. Fit the seat back and 4 bolts, tighten to **40–50Nm** and check the torque.
4. Connect the back harness connector.
5. Fix the back upholstery to the cushion frame with clips.
6. Fit the internal trim panel and secure with clip and screw.
7. Fit the external trim panel.

External Trim Panel - Front Seat Refit

www.cargeek.ir

www.cargeek.ir

Door Trim

Specifications

Torque

Description	Value
Bolt-Door inside trim to Body	2–2.4 Nm
Bolt-Door inside grab to Door Trim	1.2 Nm

www.cargeek.ir

www.cargeek.ir

www.cargeek.ir

Service Procedures

Front Door Interior Trim Panel

Remove

1. Disconnect the battery negative cable.
2. Remove the interior trim panel of the exterior rearview mirror.

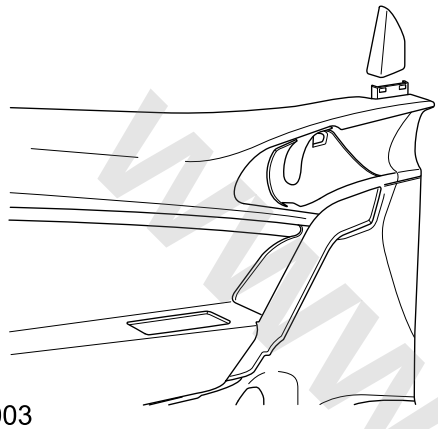

S4323003

3. Remove the screw hole cap of the inner handle, and remove 1 screw fixing the door inner handle to the door.
4. Carefully pry off the molding of the inner handle by the removing hole, and remove 2 screws fixing the inner handle to the door.

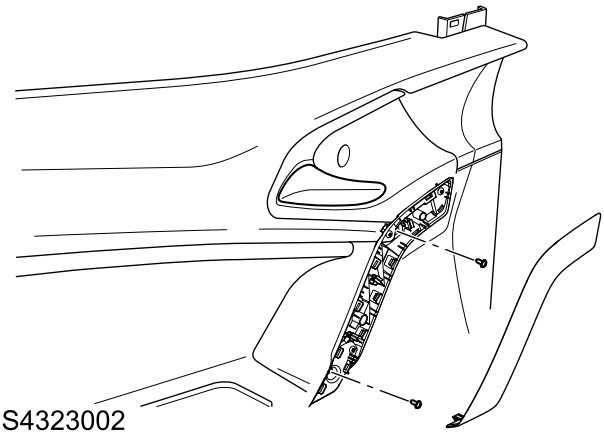

S4323002

5. Carefully release 9 clips fixing the door trim panel to the door, and discard the clip.
6. Disconnect the connectors of the tweeter, luggage compartment OPEN switch and door switch, and remove the door window switch panel.
7. Loosen the door lock cable of the inner handle.
8. Remove the front door interior trim panel.

Refit

1. Connect the electrical connector.
2. Fit the door lock cable.
3. Align the clip with the corresponding panel hole, and fit the front door trim panel to the front door.
4. Fit the self-tapping screw of the interior trim panel and tighten to **2–2.4 Nm**.
5. Fit the interior trim panel of the exterior rearview mirror.
6. Connect the battery negative cable.

www.cargeek.ir

www.cargeek.ir

Front Door Waterproof Membrane

Remove

1. Remove the front door interior trim panel.

☞**Front Door Interior Trim Panel Remove**

2. Remove the front door waterproof membrane from the door panel.

Refit

1. Apply glue to the door panel.
2. Remove the electrical connector from the waterproof membrane, align the locating hole of the waterproof membrane with the panel boss, and the upper edge is parallel to the upper edge of the internal wiper strip, then fit the door waterproof membrane.
3. Fit the interior trim panel of the front door.

☞**Front Door Interior Trim Panel Refit**

Front Door Inner Handle

Remove

1. Remove the front door interior trim panel.

☞**Remove of Front Door Interior Trim Panel**

2. Remove 5 screws securing the door handle base to the trim panel and 2 screws securing the front door inner handle to the trim panel.

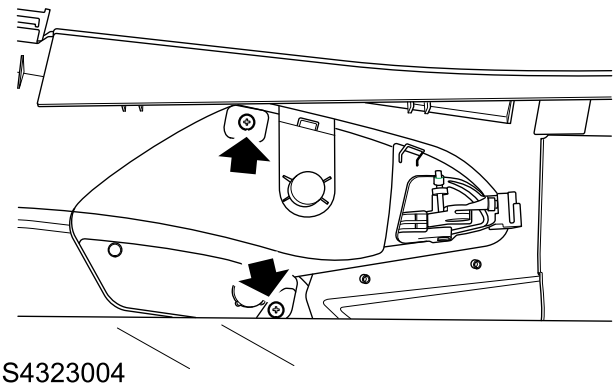

S4323004

3. Remove the front door inner handle from the interior trim panel.

Refit

1. Locate the door inner handle to the front door interior trim panel and secure with screws. **1.2 Nm**。
2. Refit the front door interior trim panel.

☞**Refit of Front Door Interior Trim Panel**

www.cargeek.ir

www.cargeek.ir

Rear Door Interior Trim Panel

Remove

1. Disconnect the battery negative cable.
2. Remove the trim panel of the inner handle, and remove the inner handle screw.
3. Remove the window switch cover, and remove the window switch screw.
4. Carefully release 9 clips fixing the door trim panel to the door, and discard the clip.
5. Disconnect the electrical connector, and remove the door window switch panel.
6. Release the lock cable of the inner door handle, and disconnect tweeter connector.
7. Remove the rear door interior trim panel.

Refit

1. Connect the electrical connector.
2. Fit the door lock cable.
3. Align the clip with the corresponding panel hole, and fit the rear door trim panel to the rear door.
4. Fit the self-tapping screw of the interior trim panel and tighten to **2–2.4 Nm**.
5. Connect the battery negative cable.

Rear Door Waterproof Membrane

Remove

1. Remove the rear door interior trim panel.

☞Rear Door Interior Trim Panel Remove

2. Remove the rear door waterproof membrane from the door panel.

Refit

1. Apply glue to the door panel.
2. Remove the electrical connector from the waterproof membrane, align the locating hole of the waterproof membrane with the panel boss, and the upper edge is parallel to the upper edge of the internal wiper strip, then fit the door waterproof membrane.
3. Fit the interior trim panel of the front door.

☞Rear Door Interior Trim Panel Refit

www.cargeek.ir

www.cargeek.ir

www.cargeek.ir

Rear Door Inner Handle

Remove

1. Remove the rear door interior trim panel.

☞ **Rear Door Interior Trim Panel Remove**

2. Remove 5 screws securing the door handle base to the trim panel and 2 screws securing the rear door inner handle to the trim panel.
3. Remove the rear door inner handle from the interior trim panel.

Refit

1. Locate the door inner handle to the rear door interior trim panel and secure with screws, with the tightening torque of **1.2 Nm**.
2. Refit the rear door interior trim panel.

☞ **Rear Door Interior Trim Panel Remove**

www.cargeek.ir

www.cargeek.ir

Interior Trim and Paneling

Specifications

Torque

Description	Value
Bolt-'BC'upper post trim to Body	1.5–2.2 Nm
Bolt-front seat belt retractor to 'BC' post	30–35Nm
Bolt-'D'upper post trim to Body	1.5–2.2 Nm
Bolt-front seat belt'D'loop to front seat belt height adjuster	30–35Nm
Bolt-Sunvisor to Body	2–2.7 Nm
Bolt-Grab handle to Handle bracket	5–7 Nm
Bolt-Compatment trim to Body	1.5–2.2 Nm
Bolt-Compatment still trim to Bodyy	1.5–2.2 Nm
Bolt-Gate low trim to Body	1.5–2.2 Nm
Bolt-Gate upper trim to Body	1.5–2.2 Nm

www.cargeek.ir

www.cargeek.ir

www.cargeek.ir

Service Procedures

A Pillar Upper Trim Panel Assembly

Remove

1. Remove the front door weatherstrip.
2. Open the upper trim cover of the A pillar upper trim panel assembly.
3. Remove 1 bolt fixing the A pillar upper trim panel assembly to the vehicle body.

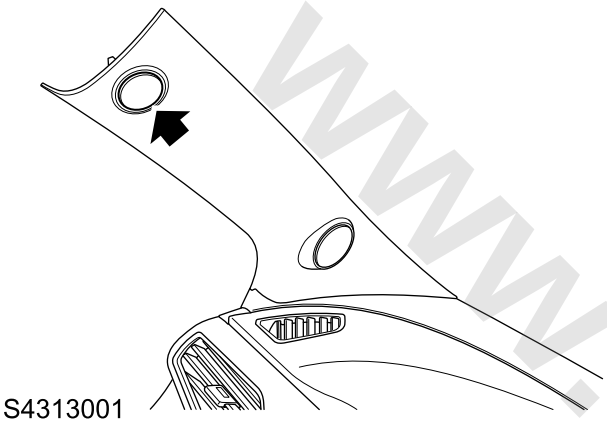

4. Disconnect the electrical connector.
5. Open the A pillar upper trim panel assembly.

Warning: It is imperative that before any work is undertaken on the SRS system the appropriate information is read thoroughly.

Refit

1. Connect the electrical connector.

Warning: The clip for side air curtain must be changed when A pillar need refit, otherwise it may cause the side curtain invalidate.

2. Fix the upper trim panel assembly of the A pillar to the vehicle body, AND fit the screw.
3. Fit the upper trim cover of the A pillar upper trim panel assembly and ensure all screws are properly fitted. Incorrect installation can affect the performance of the airbag.
4. Fit the front door weatherstrip.

A Pillar Lower Trim Panel Assembly

Remove

1. Remove the front door weatherstrip.
2. Remove the front doorsill trim panel assembly.
3. Remove the screw cap of the A pillar lower trim panel assembly.

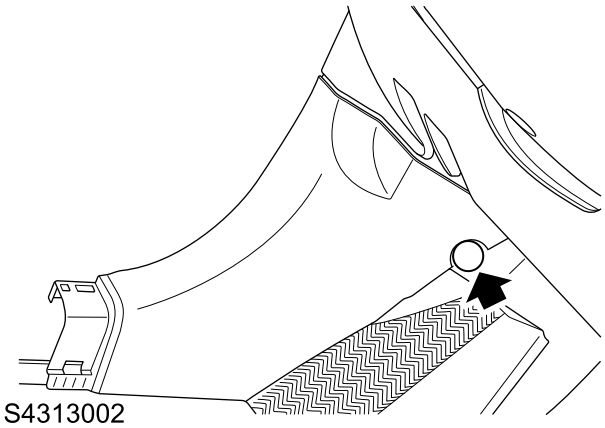

4. Remove 1 bolt retaining the A pillar lower trim panel assembly to the body, and remove the A pillar lower trim panel assembly.

Refit

1. Fit the A pillar lower trim panel assembly, and fit 1 bolt retaining the A pillar lower trim panel assembly to the body.
2. Fit the screw cap of the A pillar lower trim panel assembly.
3. Fit the front doorsill trim panel assembly.
4. Fit the front door weatherstrip.

www.cargeek.ir

www.cargeek.ir

B Pillar Upper Trim Panel Assembly

Remove

1. Remove the B pillar lower trim panel assembly.

B Pillar Lower Trim Panel Assembly Remove

2. Remove the cover plate of the B pillar upper trim panel assembly and remove 1 bolt retaining the B pillar upper trim panel assembly to the body.

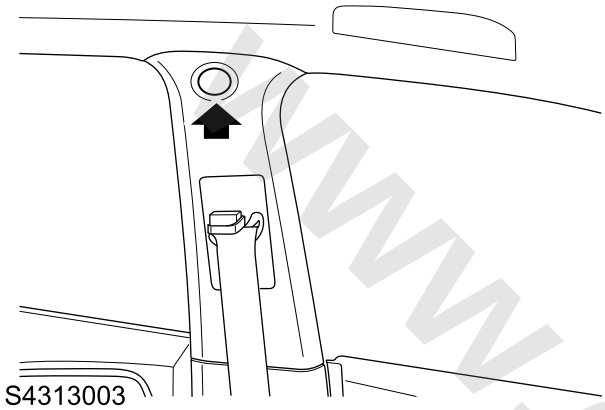

3. Release the seat belt screw.
4. Pull the seat belt from the hole of B pillar upper trim panel assembly.
5. Remove the B pillar upper trim panel assembly.

Refit

1. Fix the upper trim panel assembly of the B pillar to the vehicle body, fit the screw and tighten to **1.5–2.2 Nm**.
2. Fit the trim cover of the B pillar upper trim panel assembly.
3. Fit the front upper seat belt with bolts, and tighten the bolt to **30–35Nm**.

Front Seat Belt Assembly Refit

4. Fit the lower trim panel assembly of the B pillar.

B Pillar Lower Trim Assembly Refit

B Pillar Lower Trim Panel Assembly

Remove

1. Remove the front door weatherstrip.
2. Remove the front doorsill trim panel assembly.
3. Release 1 bolt fixing the front seat belt to the lower trim panel of the B pillar.
4. Remove the B pillar lower trim panel assembly.

Refit

1. Fit the lower trim panel assembly of the B pillar.
2. Fit 1 bolt fixing the front seat belt to the lower trim panel of the B pillar.
3. Fit the front doorsill trim panel assembly.
4. Fit the front door weatherstrip.

www.cargeek.ir

www.cargeek.ir

D Pillar Upper Trim Panel Assembly

Remove

1. Open the tail gate to remove the weatherstrip.
2. Remove the luggage cover assembly.
3. Loosen the seat belt fastening screws.
4. Draw the seat belt from the hole of D pillar upper trim panel assembly.
5. Remove the cover plate from D pillar upper trim panel assembly.
6. Remove two screws fastening the upper trim panel to the body.

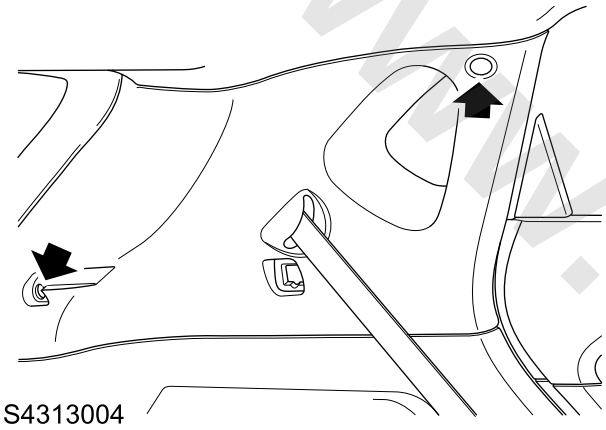

7. Remove the D pillar upper trim panel assembly.

Refit

1. Fit the D pillar upper trim panel assembly.
2. Fit 2 screws fixing the D pillar upper trim panel assembly to the body, and tighten to **1.5–2.2 Nm**.
3. Fit the cover plate of the D pillar upper trim panel assembly.
4. Fit the seat belt.
5. Fix the seat belt with bolts, and tighten the bolt to **30–35Nm**.
6. Fit the luggage cover assembly.
7. Fit the tail gate sealing strip and close the gate.

Sunvisor Assembly

Remove

1. Disconnect the battery negative cable.
2. Release the retaining clips in the middle of the sun visor.
3. Pry up the screw covers.
4. Release 2 retaining screws fixing the sun visor assembly to the roof trim panel.
5. Disconnect the harness plug.
6. Remove the sun visor assembly.

Refit

1. Fit the sun visor assembly to the correct position.
2. Connect the harness plug.
3. Fit 2 screws fixing the sun visor assembly to the roof trim panel, and tighten to **2–2.7 Nm**.
4. Fit the screw cover.
5. Secure the retaining clips in the middle of the sun visor.

www.cargeek.ir

www.cargeek.ir

www.cargeek.ir

Roof Interior

Remove

1. Disconnect the battery negative.
2. Remove the front reading lamp.

Front Reading Lamp Remove

3. Remove the rear reading lamp.

Rear Reading Lamp Remove

4. Remove the sun visor.
5. Remove the roof inner handle.

Roof Inner Handle Remove

6. Remove the A pillar upper trim panel assembly.

A Pillar Upper Trim Panel Assembly Remove

7. Remove the B pillar upper trim panel assembly.

B Pillar Upper Trim Panel Assembly Remove

8. Disassemble the D pillar trim panel assembly.

D Pillar Trim Panel Assembly Remove

9. Release 6 clips securing the roof interior.
10. Disconnect the plug of the vanity mirror lamp.
11. Tilt two front seats.
12. Remove the rear window glass.

Rear Window Glass Remove

13. Remove the interior roof panel from the tail gate carefully.

Refit

1. Open the tail gate, tilt the two front seats, and put the roof interior on the mounting position.
2. Fit the rear window glass.

Rear Window Glass Refit

3. Connect the plug of the vanity mirror lamp.
4. Fit the A pillar upper trim panel assembly.

A Pillar Upper Trim Panel Assembly Refit

5. Fit the B pillar upper trim panel assembly.

B Pillar Upper Trim Assembly Refit

6. Fit the D pillar trim panel assembly.

D Pillar Trim Panel Assembly Refit

7. Fit the roof inner handle.

Roof Inner Handle Refit

8. Fit the sun visor.
9. Fit the front reading lamp.

Front Reading Lamp Refit

10. Fit the rear reading lamp.

Rear Reading Lamp Refit

11. Connect the battery negative.

Inner Roof Handle

Remove

1. Remove 2 screw cap of the roof handle.

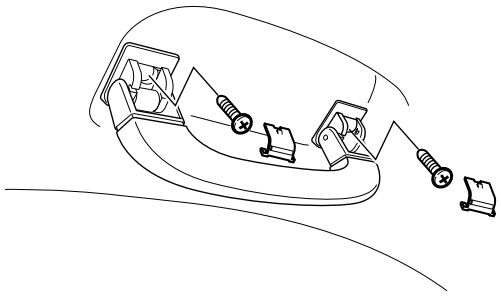

S583028

2. Release 2 screws retaining the inner roof handle to the body.
3. Remove the roof inner handle.

Refit

1. Put the inner handle of the roof to correct position.
2. Fasten two screws fastening the inner handle of the roof to the body, with the torque of **5–7 Nm**.
3. Fit the screw cover.

www.cargeek.ir

www.cargeek.ir

Luggage Compartment Interior Trim Panel

Remove

1. Open the lid of the luggage compartment.
2. Remove the luggage compartment carpet assembly.
3. Remove the storage compartment of the luggage compartment.
4. Remove the luggage compartment sill trim panel assembly.

Luggage Compartment Sill Trim Panel Assembly Remove

5. Remove the D pillar upper trim panel assembly.

D Pillar Upper Trim Panel Assembly Remove

6. Remove the luggage compartment lamp.
7. Release the screw fixing the luggage compartment to the body.

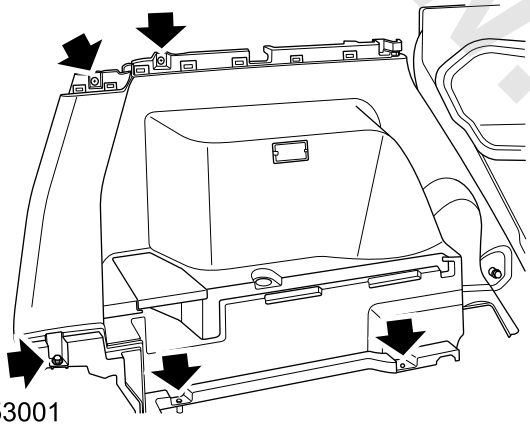

S4353001

8. Remove the side trim panel of the luggage compartment, fold and take it out.

Refit

1. Fold the side trim panel of the luggage compartment and put it on the corresponding position.
2. Fit the side trim panel screw of the luggage compartment and tighten to **1.5–2.2 Nm**.
3. Fit the D pillar trim panel assembly.

D Pillar Trim Panel Assembly Refit

4. Fit the luggage compartment sill trim panel assembly.

Luggage Compartment Sill Trim Panel Assembly Refit

5. Fit the storage compartment of the luggage compartment.
6. Fit the luggage compartment carpet assembly.
7. Close the luggage compartment lid.

Luggage Compartment Sill Trim Panel Assembly

Remove

1. Open the luggage compartment lid.
2. Remove the luggage compartment sealing strip.
3. Take out the carpet assembly of the luggage compartment.
4. Take out the luggage compartment storage box.
5. Remove the 2 screws securing the luggage compartment sill trim panel assembly to the vehicle body.

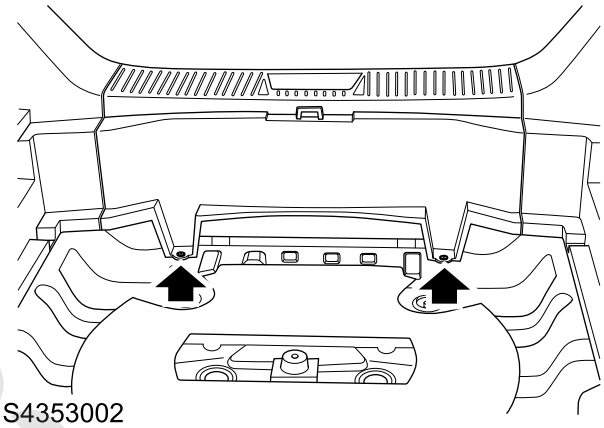

S4353002

6. From the lower end, pull the sill trim panel assembly of the luggage compartment upward by hand, and push it out towards the location of the compartment.

Refit

1. Position the luggage compartment sill trim panel assembly to the correct position, fit two screws with the torque of **1.5–2.2 Nm**.
2. Fit the luggage compartment storage box.
3. Fit the carpet assembly of the luggage compartment.
4. Fit the luggage compartment sealing strip.
5. Close the luggage compartment lid.

www.cargeek.ir

www.cargeek.ir

Tail Gate Trim Panel

Remove

1. Open the tail gate to remove the weatherstrip.
2. Pry up 2 screw covers on the tail gate upper interior trim panel, and release 2 screws securing the tail gate upper interior trim panel to the tail gate.
3. Remove the tail gate upper interior trim panel.
4. Release the clips of tail gate center interior trim panel to remove the center trim panel.
5. Pry up 2 screw covers on the tail gate lower interior trim panel, and release 2 screws securing the tail gate lower interior trim panel to the tail gate.
6. Remove the tail gate lower interior trim panel.

Refit

1. Fit the interior lower trim panel of the tail gate.
2. Fit 2 screws fixing the tail gate lower interior to the tail gate, tighten to **1.5–2.2 Nm** and fit 2 screw caps of the tail gate lower trim panel.
3. Fit the interior middle trim panel of the tail gate.
4. Fit the interior upper trim panel of the tail gate.
5. Fit 2 screws fixing the interior upper trim panel of the tail gate to the tail gate, tighten to **1.5–2.2 Nm** and fit 2 screw caps of the interior upper trim panel of the tail gate.
6. Fit the tail gate sealing strip and close the gate.

Luggage Cover Assembly

Remove

1. Open the tail gate.
2. Tilt the rear coat rack and remove.

Refit

1. Put the rear coat rack to the correct position, and fix it to the luggage compartment side trim panel.
2. Close the tail gate.

www.cargeek.ir

www.cargeek.ir

www.cargeek.ir

Carpet

Remove

1. Disconnect the battery negative.
2. Remove the rear seat cushion.

Rear Seat Cushion Remove

3. Remove the front sill trim panel.

Front Sill Trim Panel Remove

4. Remove the front door weatherstrip.
5. Remove the rear sill trim panel.

Rear Sill Trim Panel Remove

6. Remove the rear door weatherstrip.
7. Remove the lower trim panel of the left and right B pillar.

B Pillar Lower Trim Panel Remove

8. Remove the left/right A pillar lower trim panels.

A Pillar Lower Trim Panel Remove

9. Remove the front seat.

Front Seat Remove

10. Remove the center console switch of floor console and upper trim panel.
11. Remove center console.

Center Console Remove

12. Remove the carpet.
13. Remove the cushion under the main carpet.

Refit

1. Fit the cushion under the main carpet.
2. Put the carpet into the vehicle.
3. Fit the floor center console.

Center Console Refit

4. Fit the upper trim panel of the floor console and center console switch.
5. Fit the front seats.

Front Seat Refit

6. Fit the left/right A pillar lower trim panels.

A Pillar Lower Trim Panel Refit

7. Fit the lower trim panel of the left and right B pillar.

B Pillar Lower Trim Panel Refit

8. Fit the front door weatherstrip.
9. Fit the front sill trim panel.

Front Sill Trim Panel Refit

10. Fit the rear door sealing strip.
11. Fit the rear sill trim panel.

Rear Sill Trim Panel Refit

12. Fit the rear seat cushion.

Rear Seat Cushion Refit

13. Connect the battery negative.

www.cargeek.ir

www.cargeek.ir

Fixed Windows

Service Procedures

Rear Door Quarter Window

Remove

1. Remove the D pillar upper trim panel.

☞ **D Pillar Upper Trim Panel Remove**

2. Remove the adhesive around windshield with glass sealant remover.
3. Remove the rear quarter window glass from the vehicle.
4. Remove the adhesive on rear quarter window with blade.
5. Remove the adhesive on rear quarter window frame with blade.

Refit

1. Thoroughly clean the mounting position of the rear triangle window on the body with cleaner.
2. Clean the periphery of the rear triangle window with cleaner.
3. Apply glass primer around the rear triangle window.
4. Apply glass primer to the body assembly area.
5. Apply adhesive to the rear triangle window.
6. Fit the rear triangle window into the rear triangle window frame.
7. Attach tapes to the rear triangle window into the rear triangle window frame, so as to secure the rear triangle window.
8. Allow the adhesive to dry for 24 hours.
9. Remove the tape.
10. Pour the water on the rear triangle window, and check for leak. If any leak is found, dry the rear triangle window and block the leaking location with adhesive. If it still leaks, remove the rear triangle window and repeat all service procedures.
11. Fit the D pillar upper trim panel.

☞ **D Pillar Upper Trim Panel Refit**

Windshield Assembly

Remove

1. Remove the A/C air inlet grille assembly.

☞ **A/C Air Inlet Grille Assembly Remove**

2. Remove the interior rearview mirror.

☞ **Interior Rearview Mirror Remove**

3. When the scraper is applied, use glass sealant to remove the adhesive around the windshield assembly.
4. Remove the windshield assembly from the vehicle.
5. Remove the adhesive on the windshield assembly with a blade.
6. Remove the adhesive on the windshield frame with a blade.

Refit

1. Thoroughly clean the mounting position of the windshield assembly on the body with cleaner.
2. Clean the periphery of the windshield assembly with cleaner.
3. Apply glass primer around the windshield assembly.
4. Apply glass primer to the body assembly area.
5. Apply adhesive to the windshield assembly.
6. Fit the windshield assembly into the windshield frame.
7. Attach tapes to the windshield assembly and windshield frame to fix the windshield assembly.
8. Allow the adhesive to dry for 24 hours.
9. Remove the tape.
10. Pour the water on the windshield assembly, and check for leak. If any leak is found, dry the windshield assembly and block the leaking location with adhesive. If it still leaks, remove the windshield assembly and repeat all service procedures.
11. Fit the A/C air inlet grille assembly.

☞ **A/C Air Inlet Grille Assembly Refit**

12. Fit the interior rearview mirror.

☞ **Interior Rearview Mirror Refit**

www.cargeek.ir

www.cargeek.ir

Rear Window Assembly

Remove

1. Disconnect the battery negative.
2. Disconnect the rear window defogger connector.
3. Remove the rear wiper motor.

☞ **Rear Wiper Motor Remove**

4. When the scraper is applied, use glass sealant to remove the adhesive around the rear window assembly.
5. Remove the rear window assembly from the vehicle.
6. Remove the adhesive on the rear window assembly with a blade.
7. Remove the adhesive on the rear window frame with a blade.

Refit

1. Thoroughly clean the mounting position of the rear window assembly on the body with cleaner.
2. Clean the periphery of the rear window assembly with cleaner.
3. Apply glass primer around the rear window assembly.
4. Apply glass primer to the body assembly area.
5. Apply adhesive to the rear window assembly.
6. Fit the rear window assembly into the rear window frame.
7. Attach tapes to the rear window assembly and rear window frame to fix the rear window assembly.
8. Allow the adhesive to dry for 24 hours.
9. Remove the tape.
10. Pour the water on the rear window assembly, and check for leak. If any leak is found, dry the rear window assembly and block the leaking location with adhesive. If it still leaks, remove the rear window assembly and repeat all service procedures.
11. Fit the rear wiper motor.

☞ **Rear Wiper Motor Refit**

12. Connect the electrical connector of the rear window defogger.
13. Connect the battery negative.

www.cargeek.ir

www.cargeek.ir

Bumpers, Fascias and Grille

Specifications

Torque

Description	Value
Bolt-From front bumper to fender	2–2.5Nm
Bolt-From front bumper to fend upper tie bar	3–5Nm
Bolt-From rear bumper brackt to bodyside	3–4Nm
Bolt-From rear bumper to body in white	3–4Nm
Bolt-From front bumper impact bar to fend upper tie bar	7–10Nm
Bolt-From front bumper impact bar to body in white	40–50Nm
Bolt-From rear bumper impact bar to body in white	19–25Nm

www.cargeek.ir

www.cargeek.ir

www.cargeek.ir

Service Procedures

Front Bumper

Remove

1. Disconnect the battery negative.
2. Remove 3 screws securing the front bumper and left/right wheel trims.
3. Remove 5 bolts fixing the front bumper to the upper radiator beam.

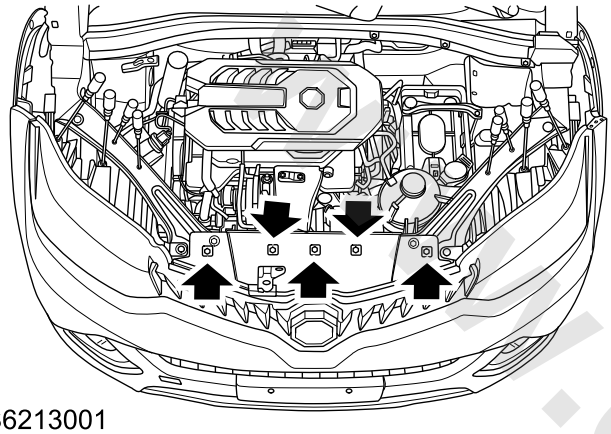

S6213001

4. Remove 1 bolt fixing the left/right of the front bumper to the left/right fender.
5. Remove the bottom deflector assembly.

Bottom Deflector Remove

6. Remove 5 screws and 1 clip fixing the front bumper to the left (right) wheel house panel.
7. Remove the ambient temperature sensor from the lower air inlet grille of the front bumper.

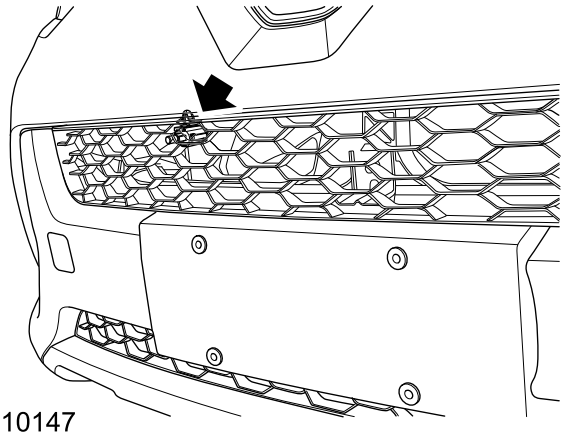

S3210147

8. If the vehicle is equipped with a headlamp washing system, disconnect the headlamp washing pipe.
9. With assistance, lift both sides of the front bumper carefully and pull it outward to remove the front bumper from the brackets at both sides of the body.
10. Disconnect the connector of the front fog lamp, remove 3 screws fixing the front fog lamp to the front bumper and remove the fog lamp (if fitted).

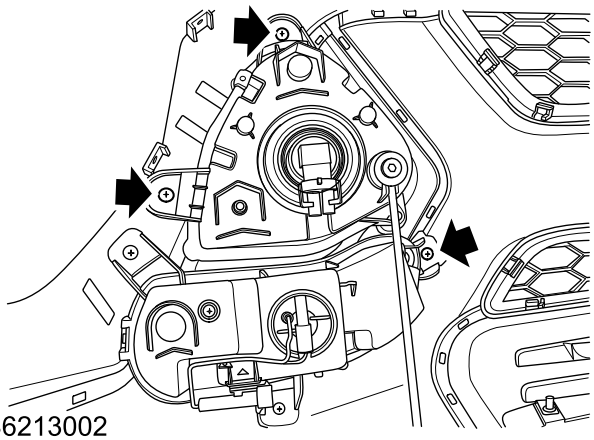

S6213002

Refit

1. Fit the front fog lamp to the front bumper.

Front Fog Lamp Assembly Refit

2. If the vehicle is equipped with a headlamp washing system, connect the headlamp washing pipe.
3. Connect the left/right fog lamps to the harness connector of the front bumper.
4. With assistance, fit the front bumper assembly to the body, and fit it into the bracket under the headlamp and fender bracket.
5. Fit 1 bolt fixing the left/right of the front bumper to the corresponding fender, tighten the bolt to **2–2.5Nm** and check the torque.
6. Fit 5 bolts fixing the front bumper to the upper radiator beam, tighten to **3–5Nm** and check the torque.
7. Fit the screw and clip fixing the front bumper to the wheel trim panel.
8. Fit the bottom deflector.

Bottom Deflector Refit

9. Fit the left/right wheel trims.
10. Connect the battery negative.

www.cargeek.ir

Rear Bumper

Remove

1. Disconnect the battery negative.
2. Open the tail gate.
3. Remove 4 clips securing the rear bumper assembly on the body.

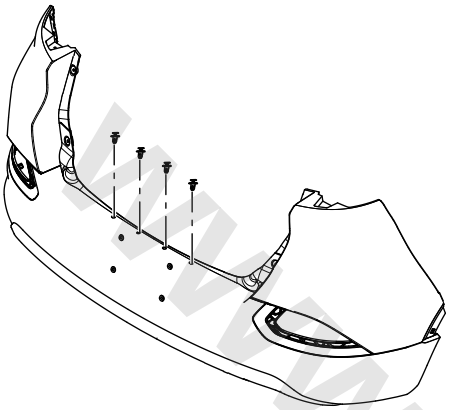

S6213003

4. Remove the rear tail lamp assembly of both sides to show the bolt securing the rear bumper and body.

Rear Tail Lamp Assembly Remove

5. Remove the screw and clip securing the rear bumper and left/right rear wheel trims.

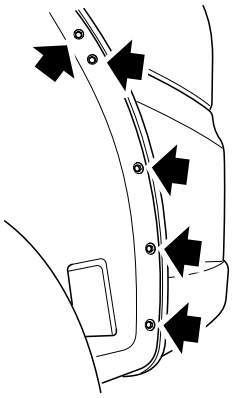

S560012

6. Remove 10 screws fixing the rear bumper to the body.

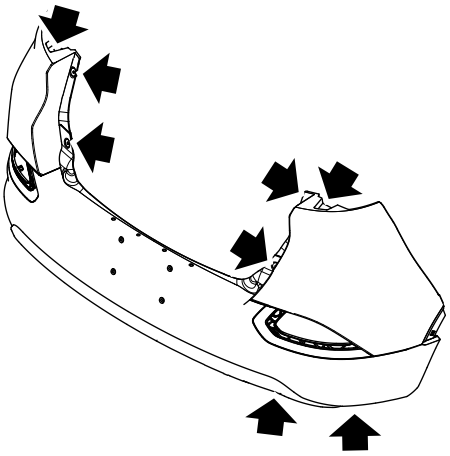

S6213004

7. Remove 3 screws securing the lower side of the left (right) rear bumper and left (right) rear wheel house liner.
8. Remove the split pin connecting the rear bumper and rear bumper bracket, and release the upper side of the rear bumper.
9. Remove 3 screws fixing the rear bumper bracket to the rear panel.
10. Remove the rear bumper and disconnect the harness connector of the ultrasonic sensor.

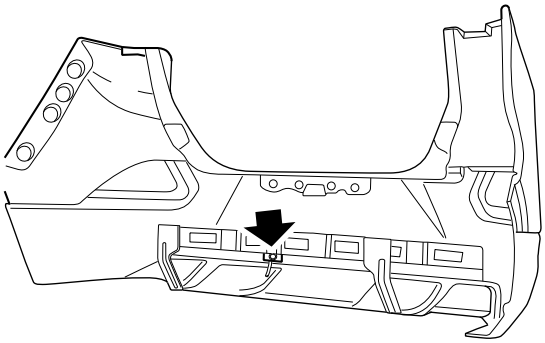

S6213005

Refit

1. With assistance, locate the rear bumper to the vehicle.
2. Connect 4 connectors of the PDC sensor.
3. Fit 3 screws fixing the rear bumper bracket to the rear panel, tighten to **3–4Nm** and check the torque.
4. Push the rear bumper slightly, and allow the bumper on each side to engage with the bumper bracket.
5. Fit 8 screws and 4 clips connecting the rear bumper and the body, tighten the screw to **3–4Nm** and check the torque.
6. Fit 3 screws securing the lower side of the left (right) rear bumper and left (right) rear wheel house liner.
7. Fit 5 screws securing the rear bumper and left/right wheel trims.
8. Fit the tail lamp assembly of both sides.

Rear Tail Lamp Assembly Refit

9. Close the tail gate.
10. Disconnect the battery negative.

www.cargeek.ir

www.cargeek.ir

Front Bumper Beam

Remove

1. Remove the front bumper.

Front Bumper Remove

2. Remove 6 bolts (1) and 2 nuts (2) fixing the front bumper beam to the body, and carefully remove the front bumper beam and upper radiator beam assembly from the body.

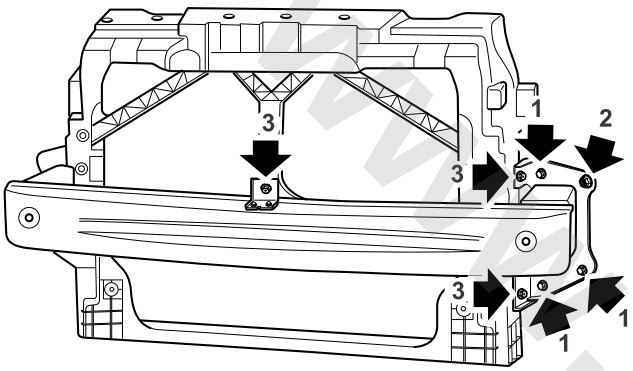

S6213006

3. Remove the screw (3) connecting the front bumper beam and the upper radiator beam to disconnect the front bumper beam and the upper radiator beam.
4. Remove the front bumper beam.

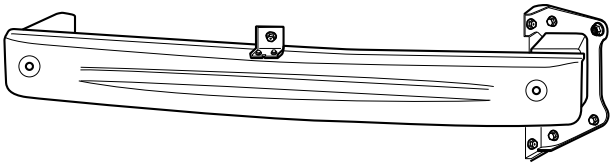

S6213007

Refit

1. Connect the front bumper beam and upper radiator beam with screws, and tighten to **7–10Nm**.
2. Fit the front bumper beam and upper radiator beam assembly to the body, connect them with bolts and nuts respectively and tighten to **40–50Nm**.
3. Fit the front bumper.

Front Bumper Refit

Rear Bumper Beam

Remove

1. Remove the rear bumper.

Rear Bumper Remove

2. Remove 4 bolts (1) and 2 nuts (2) securing the rear bumper beam to the rear end of the vehicle body.

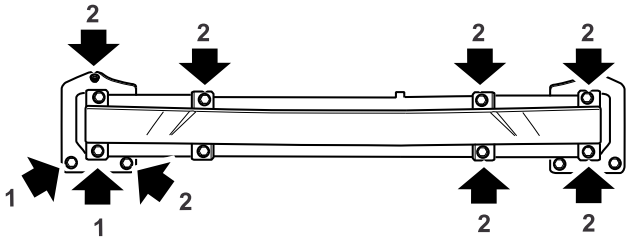

S6213008

3. Remove the rear bumper beam from the rear end of the vehicle body.

Refit

1. Fit the rear bumper beam to the rear end of the vehicle body, connecting them with bolts and screws respectively and tighten to **19–25Nm**.
2. Fit the rear bumper.

Rear Bumper Refit

www.cargeek.ir

www.cargeek.ir

Exterior Trim and Paneling

Specifications

Torque

Description	Value
Bolt-From under flow duct to front wheel casing	2–3Nm
Bolt-From front wheel casing to front bumper	2–3Nm
Bolt-From front wheel casing to front bumper and sill	2.5–3.5Nm
Bolt-From rear wheel casing to rear bumper	2–3Nm
Nut-From tailgate trim to tailgate	2–3Nm

www.cargeek.ir

www.cargeek.ir

www.cargeek.ir

Service Procedures

Bottom Deflector

Remove

1. Raise the vehicle on the elevator.
2. Remove 4 self-tapping screws securing the bottom deflector with front wheelhouse.
3. Remove 3 bolts connecting the bottom deflector and front subframe.
4. Remove 5 bolts connecting the bottom deflector and front bumper to take out the bottom deflector.

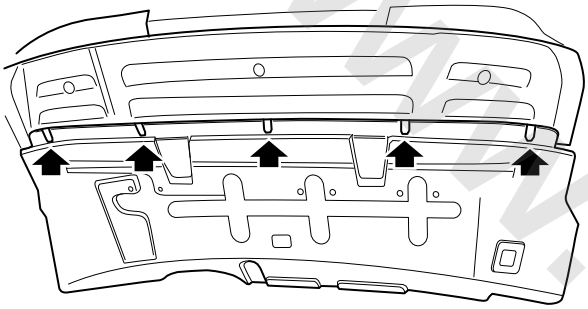

Refit

1. Insert the bottom deflector to the lower revers of front bumper, and fit 5 screws from the middle to both sides in sequence.
2. Fit 3 bolts from left to right in sequence to connect the bottom deflector with front subframe.
3. Fit 4 self-tapping screws connecting the bottom deflector with front wheelhouse.
4. Lower the vehicle.

Front Wheelhouse Liner

Remove

1. Raise the vehicle on a lift.
2. Remove the front wheels.

Wheel Remove

3. Remove the front fender board (if any).
4. Remove 5 split pins fixing the front wheel house liner to the left of the front bumper.
5. Remove 2 screws fixing the front wheel house liner to the bottom deflector.
6. Remove 2 nuts fixing the front wheel house liner to the body fender.
7. Remove 4 self-tapping screws connecting the front wheel house liner to the front section of the sill molding.
8. Remove the front wheel house liner.

Refit

1. Lift the wheel house, pass the split pin through the wheel house and fix it to the mounting point on the BIW.
2. Fix the wheel house to the corresponding position on the bottom deflector, fit 2 screws, tighten to **2–3Nm** and check the torque.
3. Fix the flanging of the wheel house, front bumper and fender, fit the self-tapping screw, 7 screws and split pin connecting the flanging of the wheel house, front bumper and fender, tighten to **2–3Nm** and check the torque.
4. Fit 4 self-tapping screws connecting the wheel house, bottom of the front bumper and front of the sill molding, tighten to **2.5–3.5Nm** and check the torque.
5. Fit the front wheels.

Wheel Refit

6. Lower the vehicle.

www.cargeek.ir

Rear Wheelhouse Liner

Remove

1. Raise the vehicle on the elevator.
2. Remove the rear wheel.

☞ **Wheel Remove**

3. Remove the rear mudguard (if any).
4. Remove the screws and cotter pins fixing on the wheel house revers, wheel trim and rear bumper revers.
5. Remove the rear wheel house liner.

Refit

1. Lift the wheel house liner, pass the split pin through the wheel house and fix it to the mounting point on the BIW.
2. Connect the rear wheel house, wheel house flanging, wheel trim and rear bumper, fit the self-tapping screw and split pin, tighten to **2–3Nm** and check the torque.
3. Fit the rear fender (if any).
4. Fit the rear wheel.

☞ **Wheel Refit**

5. Lower the vehicle.

A/C Air Intake Grille Assembly

Remove

1. Remove the side corners above both sides of A/C air intake grille.
2. Remove the windshield wiper arm assembly.

☞ **Windshield Wiper Arm Assembly Remove**

3. Remove 6 screws securing the A/C air intake grille.
4. Disconnect the windshield washer hose to remove the A/C air intake grille.

Refit

1. Connect the windshield washer hose, locate and fit the A/C air intake grille to the vehicle body.
2. Fit 6 screws and tighten.
3. Fit the windshield wiper arm assembly.

☞ **Windshield Wiper Arm Assembly Refit**

4. Fit the side corners above both sides of A/C air intake grille.

www.cargeek.ir

www.cargeek.ir

Roof Rack Assembly

Remove

1. Remove the roof interior trim.

☞**Roof Interior Trim Remove**

2. Remove 4 nuts securing the roof rack to the roof.
3. Remove the binder close to the mounting hole of roof groove rack.
4. Remove the roof rack.

Refit

1. Raise the rack guide rail over the roof horizontally, and insert the 4 bolts on each side to the roof panel mounting hole (the foam liner shall not contact with the roof panel).
2. After confirming that all bolts are inserted into the mounting hole, lower down the rack slowly to allow it in full contact with the panel.
3. Secure the roof rack to the roof with 4 nuts.
4. Fit the roof interior trim.

☞**Roof Interior Trim Refit**

Roof Moulding

Remove

1. Remove the roof rack assembly (if equipped).

☞**Roof Rack Remove**

2. Remove the roof moulding.
3. If the clips of the roof moulding are dropped or damaged, remove the clips and discard.

Refit

1. Wipe the moulding mounting area on the body surface.
2. Use the specified glue to fix the mounting clips of the roof moulding to the roof groove (If the clips are dropped or damaged).
3. Fit the roof moulding.
4. Fit the roof rack assembly (if equipped).

☞**Roof Rack Refit**

www.cargeek.ir

www.cargeek.ir

Spoiler Assembly

Remove

1. Open the tail gate and remove the tail gate trim panel

☞Tail Gate Trim Panel Remove

2. Remove 6 fastening nuts of the spoiler assembly.
3. Remove the spoiler assembly.

Refit

1. Stick a round of 3M adhesive tape on the binding face between the spoiler and tail gate.
2. Place the spoiler to the corresponding mounting position of the tail gate outer plate.
3. Open the tail gate and fit 6 fastening nuts.
4. Fit the tail gate trim panel.

☞Tail Gate Trim Panel Refit

Rear Cover Lower Moulding

Remove

1. Remove 2 bolts securing the rear cover to the tail gate trunk lid.
2. Remove the rear cover lower moulding.

Refit

1. Put the rear cover trim panel to the corresponding position of the rear trunk lid.
2. Fit 2 bolts securing the rear cover trim panel to the rear trunk lid.

www.cargeek.ir

www.cargeek.ir

www.cargeek.ir

Tail Gate Moulding

Remove

1. Open the tail gate and remove the tail gate trim panel

☞**Tail Gate Trim Panel Remove**

2. Remove 4 nuts securing the tail gate moulding.
3. Pull out 3 clips to remove the tail gate moulding.

Refit

1. Locate the tail gate moulding to the tail gate and secure with clips.
2. Secure the tail gate moulding to **2–3Nm** with nuts.
3. Fit the tail gate trim panel.

☞**Tail Gate Trim Panel Refit**

Sill Moulding

Remove

1. Remove 4 front and rear fastening screws at wheelhouse side.
2. Remove 7 cotter pins of sill trim panel.
3. Remove the sill trim panel.

Refit

1. Locate the sill trim panel.
2. Fit 7 cotter pins of sill trim panel.
3. Fit 4 front and rear fastening screws at wheelhouse side.

www.cargeek.ir

www.cargeek.ir

Pedal Assembly

Remove

1. Remove 4 front and rear fastening screws at wheelhouse side.
2. Remove 7 cotter pins of pedal assembly.
3. Remove the pedal assembly.

Refit

1. Locate the pedal assembly.
2. Fit 7 cotter pins of pedal assembly.
3. Fit 4 front and rear fastening screws at wheelhouse side.

www.cargeek.ir

www.cargeek.ir

www.cargeek.ir

Mirrors

Specifications

Torque

Description	Value
Nut-door mirror to front door	7–10Nm
Nut-interior mirror to backet of mirror	1.6–2.0Nm

www.cargeek.ir

www.cargeek.ir

Description and Operation

System Layout

Exterior Rearview Mirror Layout

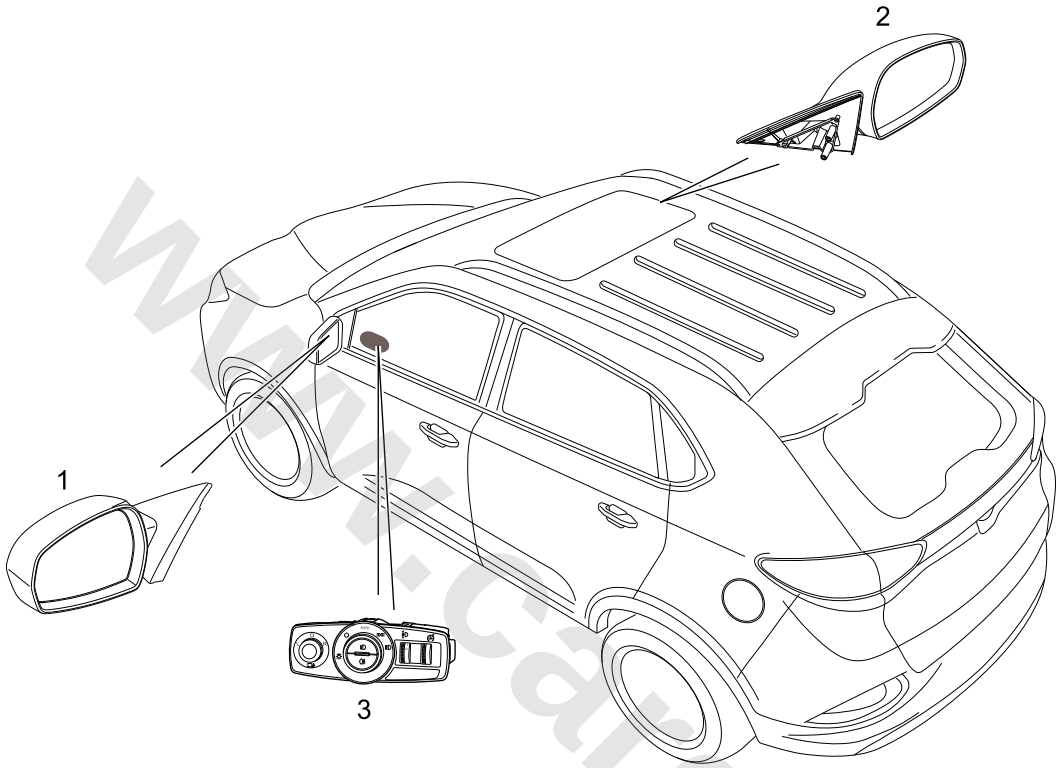

SC410005

1. Left Exterior Rearview Mirror Assembly
2. Right Exterior Rearview Mirror Assembly
3. Master Light Switch

www.cargeek.ir

www.cargeek.ir

www.cargeek.ir

System Control Diagram

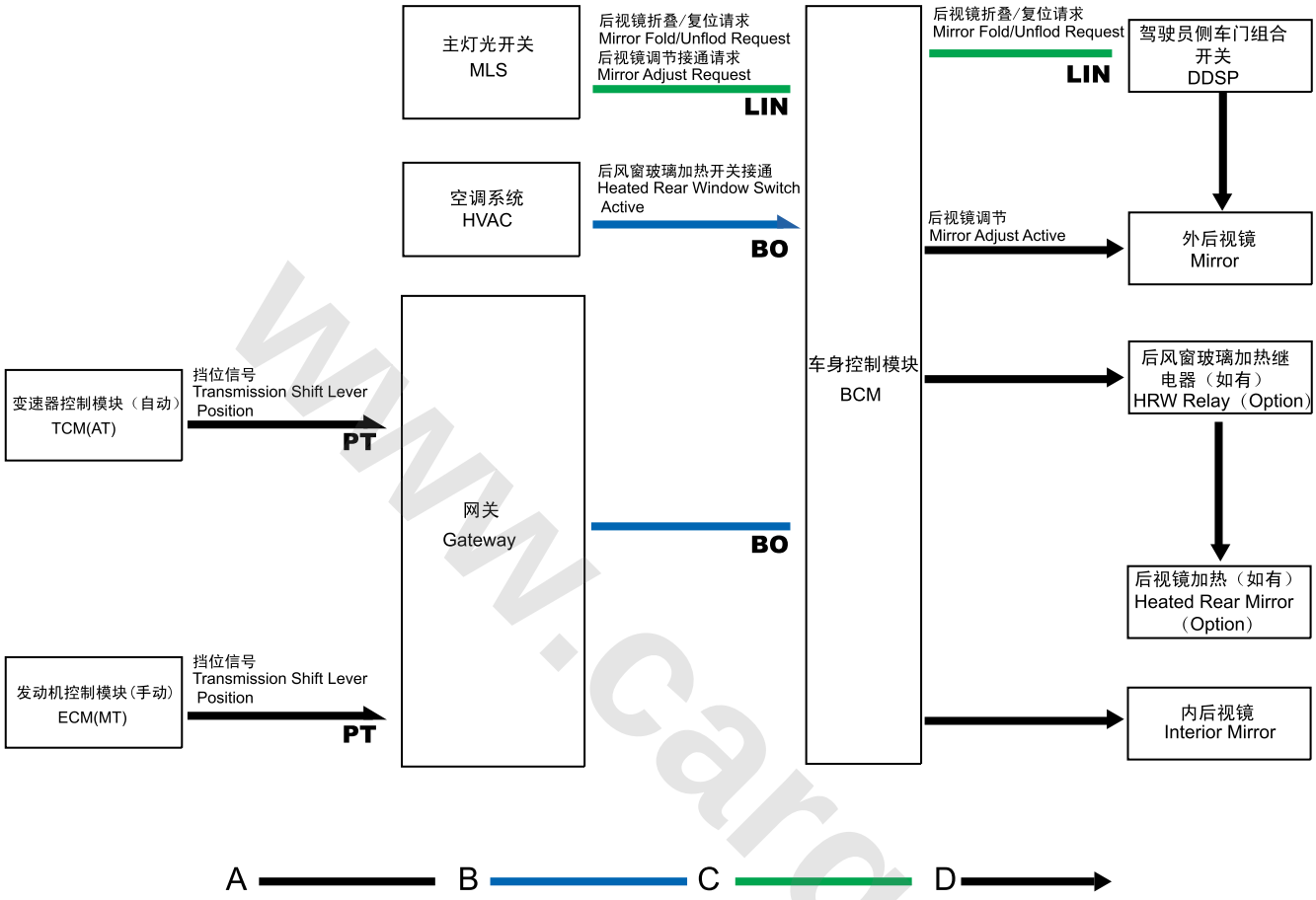

S8361004

A = Power HS CAN Bus; B = Body HS CAN Bus; C = LIN Bus; D = Hard Wire

www.cargeek.ir

www.cargeek.ir

Description

Overview

The power exterior rearview mirror assembly is fitted on all models as a standard configuration. Each exterior rearview mirror assembly is controlled by the circular control switch of the master light switch.

Exterior Rearview Mirror Assembly

The left and right exterior rearview mirror assemblies shall be distinguished, but the basic structures are the same. The housing of the exterior rearview mirror assembly is a plastic mould which includes the exterior rearview mirror steering gear, mirror and side direction indicator lamp. The exterior rearview mirror assembly is fixed on the front door by 3 bolts and 1 locating pin, and the 3 bolts are visible only when the front door pillar trim panel is removed.

The housing of the exterior rearview mirror assembly is unrepairable and shall be replaced as an assembly. The exterior rearview mirror, the exterior rearview mirror seal gasket, the exterior rearview mirror cover and side direction indicator lamp bulb are repairable.

Exterior Rearview Mirror Heater

Heating the rearview mirror glass is to avoid appearance of mist or frost on the mirror. The heating element is located at the back side of the mirror, which works when the rear window is heated. The heating element is connected with the door harness by two terminals behind of the mirror.

www.cargeek.ir

www.cargeek.ir

www.cargeek.ir

Master Light Switch

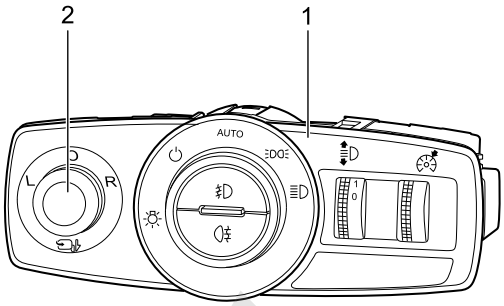

SC410006

1. Master Light Switch

The master light switch is on the closure panel under the driver side instrument panel.

The master light switch has a circular control switch which can operate the vertical and horizontal motors in the exterior rearview mirror assembly. The circular control switch can be adjusted to 4 ways and rotate. Turn the two **LED**s (L & R) above the circular control switch counterclockwise/clockwise to select one of the exterior rearview mirrors. When the width lamp or headlamp illuminates, the **LED** flashes.

2. Exterior Mirror Control Switch

Diagnosis

The exterior rearview mirror assembly system has no diagnosis information. The faults of the exterior rearview mirror assembly system can be judged by detecting the power supply, ground connection, harness continuity and switch status.

www.cargeek.ir

www.cargeek.ir

Operation

Exterior Rearview Mirrors

The steering gear of the exterior rearview mirror includes 2 bidirectional motors (vertical motor and horizontal motor) which provide horizontal and vertical motions for the rearview mirror. The vertical motors is responsible for the up-and-down motion while the horizontal motor is for the left-and-right motion.

According to the configuration, some exterior rearview mirrors are provided with a bidiretional folding motor with power folding or expansion function.

The exterior rearview mirror can provide the following functions:

- Exterior Rearview Mirror Heating
- Exterior Rearview Mirror Folding (power)
- Exterior Rearview Mirror Adjustment

Exterior Rearview Mirror Heating

When operating the A/C control panel, the A/C control unit communicates with the **BCM**, which controls the rear window heater relay to heat the exterior rearview mirror by the **BCM**.

Exterior Rearview Mirror Folding (power)

The **BCM** receives the exterior rearview mirror folding/expansion request from the control switch of the **MLS** and activates the folding motor of the exterior rearview mirror to fold or expand the exterior rearview mirror by sending operation instructions to the **DDSP** via the line of the **LIN**.

Exterior Rearview Mirror Adjustment

The **MLS** is connected with the vertical motor and horizontal motor by hard wire, and the exterior rearview mirror can be adjusted up, down, left or right by the control switch of the **MLS**.

Interior Rearview Mirror

Auto Anti-dazzle Function

During driving, the strong light from the interior rearview mirror may affect the driver. The auto anti-dazzle function can solve this problem and avoid unnecessary consequences from this visual impact. With the shift lever in R gear and the engine working, the **BCM** provides reverse signal for the interior rearview mirror. When the rearview mirror detects this input, it disables the auto anti-dazzle function, this helps the drive to observe the object behind the vehicle by the reflectivity of the rearview mirror during reversing.

www.cargeek.ir

www.cargeek.ir

www.cargeek.ir

Service Procedures

Exterior Rearview Mirror Assembly

Remove

1. Disconnect the battery negative.
2. Release 2 clips securing the front door interior triangle trim panel on the door, and remove the trim panel.
3. Remove the front door interior trim panel.

Front Door Interior Trim Panel Assembly Remove

4. Remove the small cover plate from the farthest inside bolt of the exterior rearview mirror assembly.
5. Disconnect the connector of the exterior rearview mirror assembly.
6. Remove 3 bolts securing the exterior rearview mirror assembly on the door, and remove the exterior rearview mirror assembly.

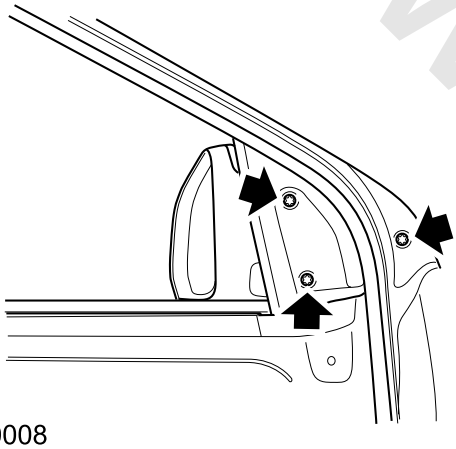

SC410008

Refit

1. With the locating pins on the exterior rearview mirror assembly, position the assembly to the corresponding location hole on the door, fit and tighten 3 bolts to **7–10Nm**.
2. Connect the connector of the exterior rearview mirror assembly.
3. Fit the small cover plate of the farthest inside bolt.
4. Fit the front door interior triangle trim panel.
5. Fit the front door interior trim panel.

Front Door Interior Trim Panel Assembly Refit

6. Connect the battery negative.

Exterior Rearview Mirror Cover

Remove

1. Remove the exterior rearview mirror.
2. Unscrew 2 bolts securing the cover to th exterior rearview mirror assembly.

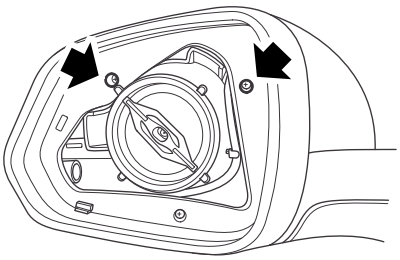

SC410001

3. Prop up the exterior rearview mirror cover outwards with a proper lever.

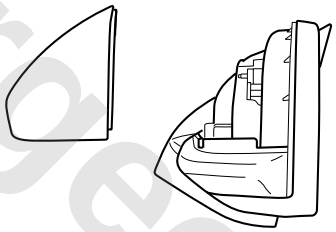

SC410002

Refit

1. Fit the cover to the exterior rearview mirror assembly.
2. Fit 2 bolts to secure the cover.
3. Fit the exterior rearview mirror and check if the mirror is fitted in position.

www.cargeek.ir

www.cargeek.ir

Automatic Anti-dazzle Interior Rearview Mirror Assembly

Remove

1. Disconnect the battery negative.
2. Push the cover down to disconnect it from the roof, and remove the cover.

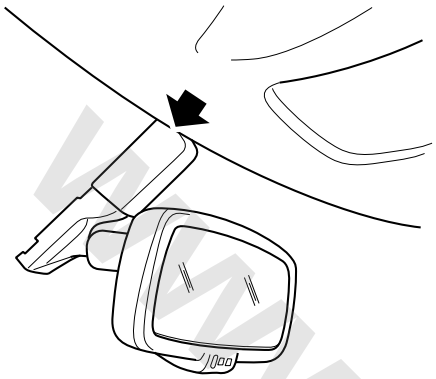

SC410003

3. Release the screw and remove the interior rearview mirror from the windshield base.

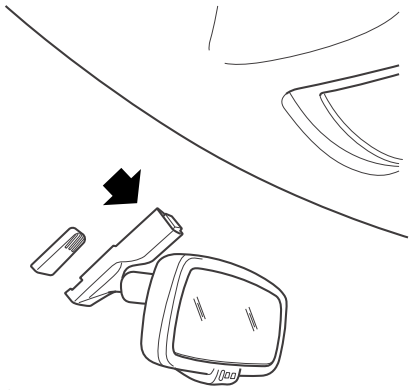

SC410004

4. Disconnect the roof harness connector and interior rearview mirror connector.

Refit

1. Insert the interior rearview mirror to the windshield socket.
2. Fit and tighten the screws to **1.6–2.0Nm** to fit the ceiling harness connector with interior rearview mirror connector.
3. Fit the cover onto the interior rearview mirror, and push upwards to contact with the ceiling.
4. Connect the battery negative.

Manual Anti-dazzle Interior Rearview Mirror Assembly

Remove

1. Knock down the interior rearview mirror assembly with rubber hammer with care to remove it from the socket.

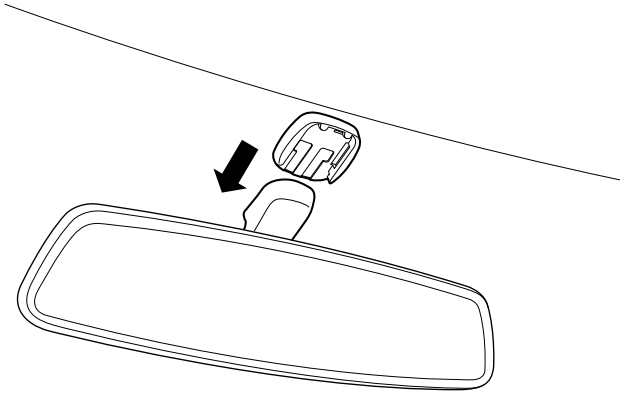

SC410007

Refit

1. Position the interior rearview mirror to the mounting bracket, push it into the slot with care to fit in position.

www.cargeek.ir

www.cargeek.ir

Roof

Specifications

Torque

Description	Value
Bolt - sunroof to vehicle roof	4.5–5.9Nm
screw - sunroof glass to sunroof	4.8–7.2Nm
screw - sun shade to sunroof	0.8Nm
screw - motor to sunroof	2.5Nm

www.cargeek.ir

www.cargeek.ir

www.cargeek.ir

Description and Operation

System Layout

Sunroof Assembly Structure Chart

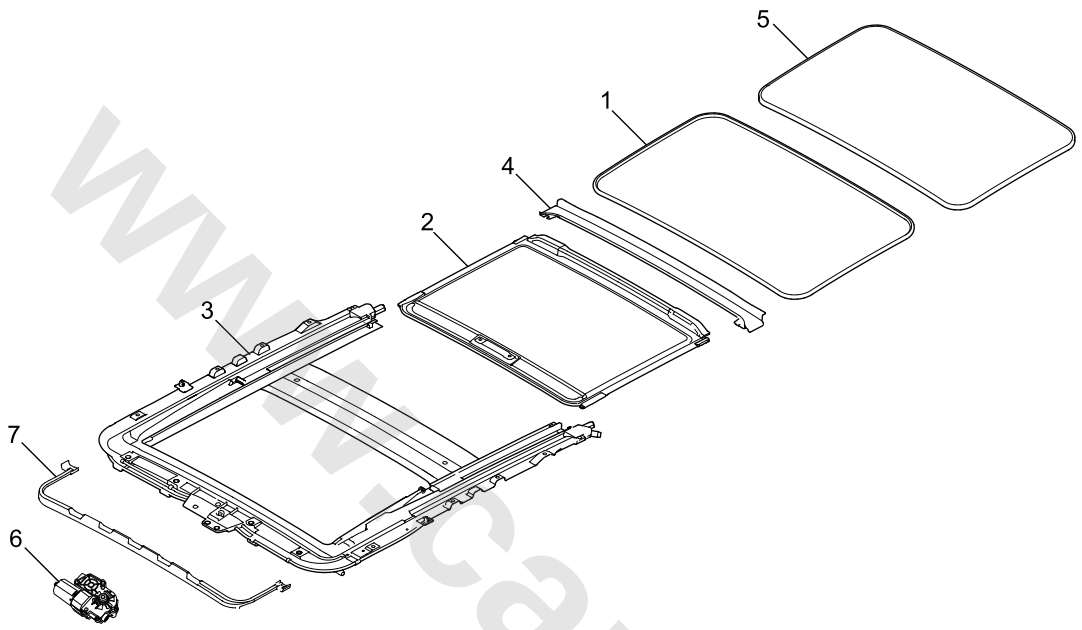

S6310006

1. Sunroof Sealing Strip
2. Sunroof Sun Visor
3. Sunroof Frame Assembly
4. Drain Gutter
5. Sunroof Glass Panel
6. Sunroof Motor
7. Sunroof Deflector

www.cargeek.ir

www.cargeek.ir

System Control Diagram

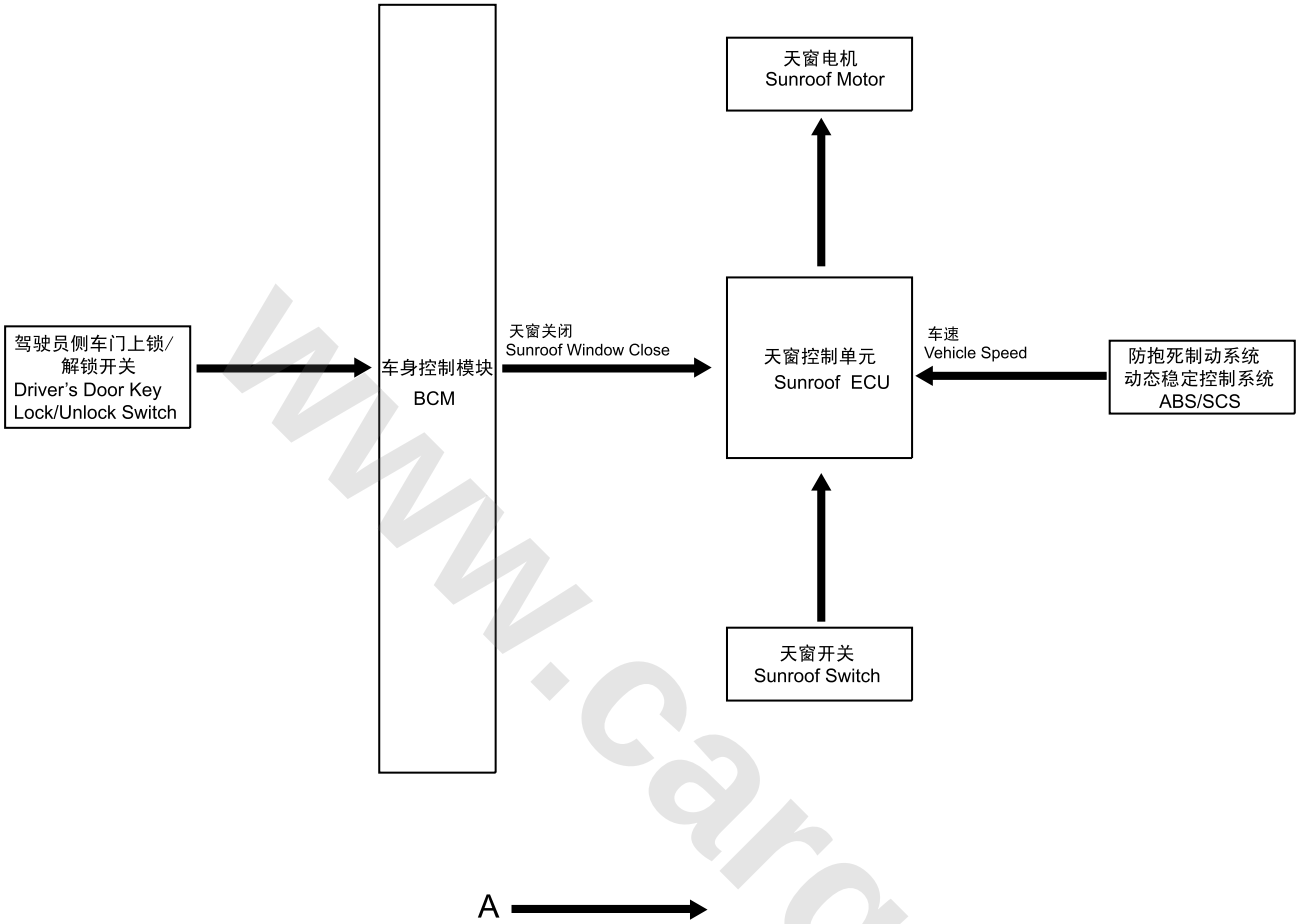

S8361005

A = Hard Wire

www.cargeek.ir

www.cargeek.ir

www.cargeek.ir

Description

Overview

The sunroof system has one-touch slide opening/closing function. All operations on the sunroof system are completed by one switch.

Sunroof Switch

The sunroof switch controls the sunroof assembly to lift and slide.

The rotation of the switch controls the contacts inside the switch and transfers the ground output to the motor and drive unit of the sunroof assembly. The sunroof electronic control unit (**ECU**) analyzes signals and powers the motor to drive the sunroof glass panel to move in the required direction.

Sunroof Assembly

The sunroof assembly consists of a sunroof glass panel, a sun visor, a frame assembly between the roof and the interior roof panel, a deflector (on the frame assembly between the roof and the interior roof panel), a drain gutter and a motor.

The frame assembly is composed of the front frame, middle beam, guide rails on both sides and a drain gutter on the middle beam.

The sunroof deflector is designed with a knife-edge shape, which includes the leaf spring moulding fitted on the guide rail.

The sunroof glass is made of safety glass (thickness: 4mm). The sunroof glass is fixed on the sunroof assembly by 6 screws.

The sunroof sun visor is in the inside edge slot of the front frame side rail, and the sun visor clip is at the rear of the sun visor. When the sunroof assembly closes, the sun visor clip achieves the lower side of the sunroof glass panel. When the sunroof assembly is opened by sliding, the sun visor clip will open the sun visor and sunroof glass panel at the same time.

The sunroof assembly is provided with a drainage control system. Water can be introduced into the drain pipe, and then enters into each wheel house via the drain pipe.

Input and Output of the Motor and Drive Unit

The sunroof **ECU** and motor are powered by the battery via the **BCM** fuse 43. The system ground can be used for the operation of the **ECU**, motor and switch. The switch ground signal and two control signals of the sunroof are input by the switch.

www.cargeek.ir

www.cargeek.ir

Operation

Overview

The sunroof assembly can be operated when the vehicle power is on.

Operation of Sunroof Assembly

Sunroof Switch

The sunroof control unit drives the sunroof motor to slide, open, tilt or switch off according to the input command from the sunroof switch.

Mechanical Key

When using the mechanical key to lock the vehicle from the drive side and the operation continues for more than 2s, the **BCM** will send the lock signal to the sunroof control unit and drive the sunroof motor to switch off.

Anti-pinch Function

If any object occurs in the sunroof sliding/closing channel, the sunroof will stop moving and fully open.

Synchronization of Window Regulator System

When using the mechanical key to lock the vehicle, if the lock status exceeds 2s, all windows will close when the sunroof assembly closes.

Initialization of Sunroof Assembly

If the sunroof is operated manually (not at zero position), the sunroof shall be initialized. Specific steps are as follows:

1. When the TILT button on the sunroof switch is pressed, the sunroof glass panel will lift.
2. When the button is pressed again and held for 8s, the sunroof glass panel will lift further, it will stop after returning to the lift position, then the switch can be released.

Perform the above 2 steps to finish sunroof initialization.

Sunroof Motor Heat Protection

To avoid motor damage by high temperature, the **ECU** controls the motor according to the following principles.

- The maximum operation duration is 120s.
- The minimum cooling time is 35s.

When the heat protection is activated, the sunroof assembly only receives CIOSE command, it can respond to other operation commands only when it achieves the heat protection time set.

After the heat protection operation, if there is a need to operate the sunroof assembly, then the maximum operation duration for the sunroof glass panel is 35s, and the minimum cooling time is 150s.

www.cargeek.ir

www.cargeek.ir

Service Procedures

Sunroof Assembly

Remove

1. Disconnect the battery negative.
2. Remove the interior roof trim panel.

☞ **Interior Roof Trim Panel Remove – With Sunroof**

3. Release the drain pipe clip and disconnect 4 drain pipe clips from the sunroof assembly.
4. Remove 13 bolts fixing the sunroof assembly to the body, and with assistance, remove the sunroof assembly.

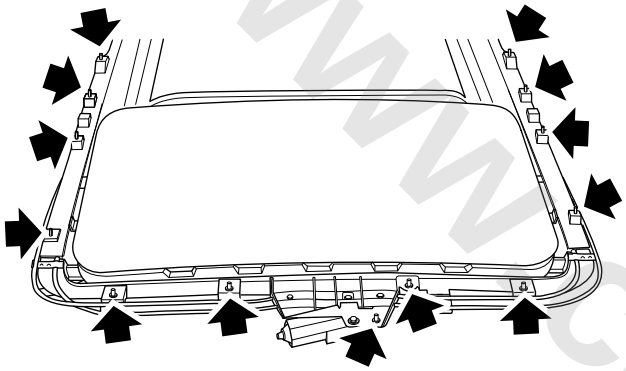

S6310002

Refit

1. Locate the sunroof assembly to the vehicle body with aid, and tighten the bolts to **4.5–5.9Nm** to secure it.
2. Connect the drain pipe to the sunroof assembly and secure with clamps.
3. Fit the roof interior trim.

☞ **Roof Interior Trim Refit – with Sunroof**

4. Connect the battery negative.

Sunroof Glass Panel

Remove

1. Open the sunroof sunvisor.
2. Remove the screws (6 in total on both sides) securing the sunroof glass panel.

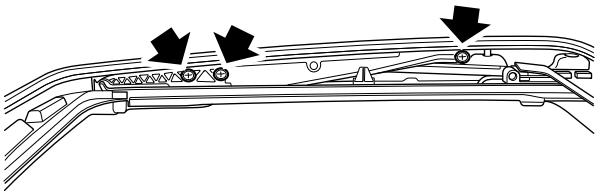

S6310001

3. Take off the sunroof glass panel assembly.

Refit

1. Locate the sunroof glass panel to the vehicle body, prefit 6 screws.
2. Adjust the sunroof glass panel to allow it consistent with the roof panel radian, and tighten the screws to **4.8–7.2Nm**.
3. Operate the sunroof motor to make the sunroof glass panel open for 8 seconds slantways, so as to initialize the sunroof motor.
4. Operate the sunroof glass panel to check for the mounting.
5. Close the sunroof sunvisor.

www.cargeek.ir

Sunroof Sunvisor

Remove

1. Remove the sunroof assembly.

Sunroof Assembly Remove

2. Remove 2 screws securing the rear sunroof sunvisor stopper to the sunroof guide rail and remove the stopper.
3. Slide the sunroof sunvisor backwards to remove.

Refit

1. Locate the sunroof sunvisor to the sunroof assembly.
2. Fit the rear stopper of sunroof sunvisor to the sunrood guide rail and secure with screws, tightening to **0.8Nm**.
3. Operate the sunroof sunvisor to check for the mounting.
4. Fit the sunroof assembly.

Sunroof Assembly Refit

Sunroof Motor

Remove

1. Disconnect the battery negative cable.
2. Remove the roof interior trim panel.

Roof Interior Trim Panel Remove - With Sunroof

3. Remove 3 screws fixing the sunroof motor.

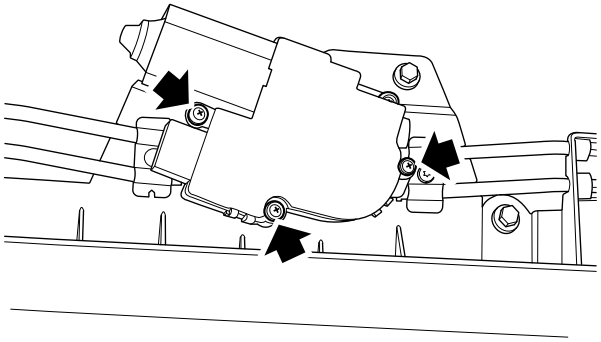

S6310003

4. Disconnect the connector and remove the sunroof motor.

Refit

1. Locate the sunroof motor, and engage the motor drive gear in the sunroof cable.
2. Fit and tighten 3 mounting screws of the sunroof motor, the tightening torque is **2.5Nm**.
3. Refit the roof interior trim panel.

Roof Interior Trim Panel Refit - With Sunroof

4. Connect the battery negative cable.

www.cargeek.ir

Wipers and Washer

Specifications

Torque

Description	Value
Nut - wiper arm to linkage spindle	25–35Nm
screw - linkage spindle to bodywork	8–10Nm
Bolt- wiper container to bodywork	4–6Nm
Nut -rear wiper arm to motor shaft	8–10Nm
Nut - rear wiper motor to tailgate	8–10Nm

www.cargeek.ir

www.cargeek.ir

www.cargeek.ir

Description and Operation

System Layout

Wiper Exploded View

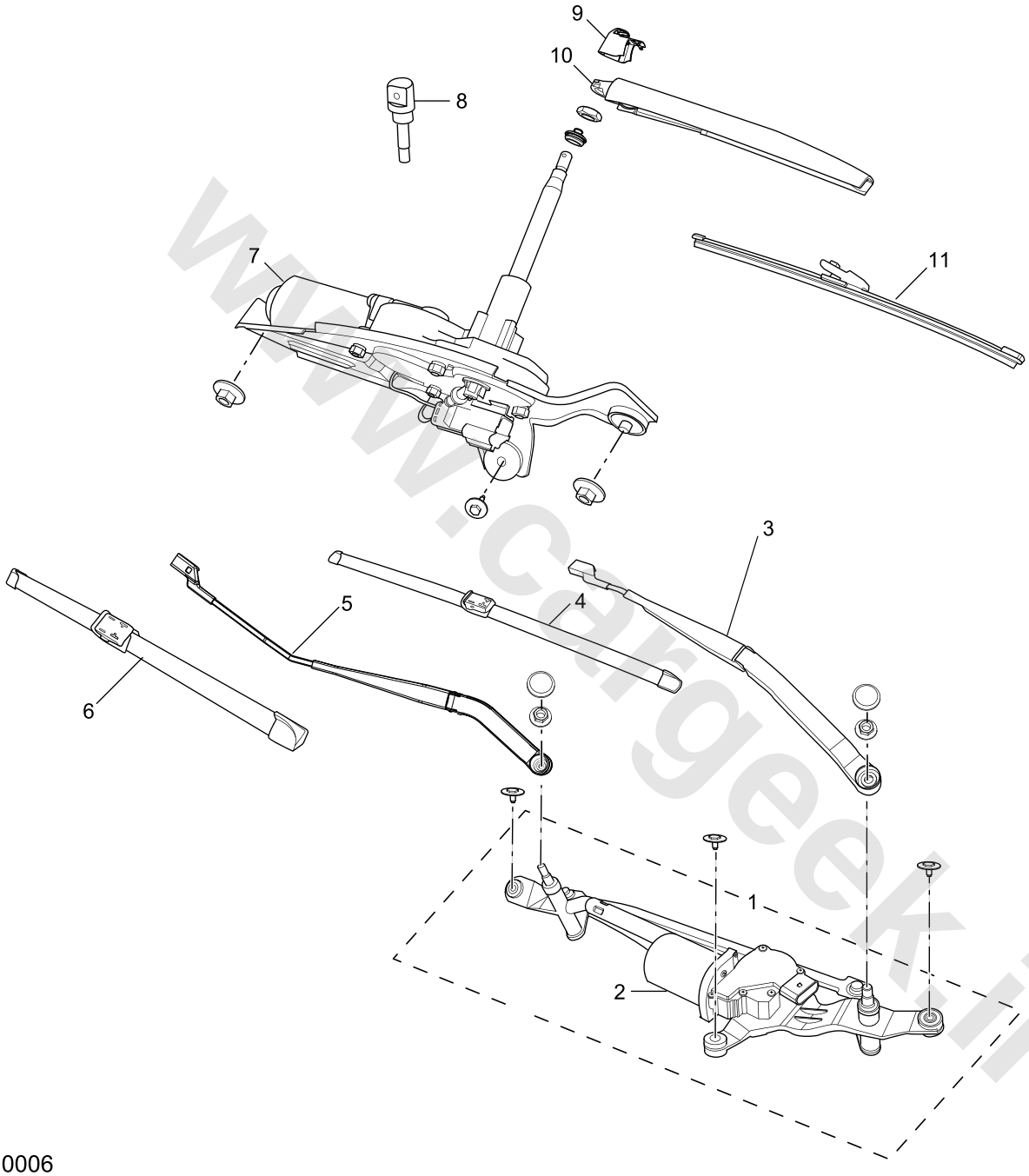

S6810006

1. Windshield Wiper Linkage/Motor Assembly
2. Windshield Wiper Motor
3. Driver Side Wiper Arm Assembly
4. Driver Side Wiper Blade Assembly
5. Front Passenger Side Wiper Arm Assembly
6. Front Passenger Side Wiper Blade Assembly
7. Rear Window Wiper Motor
8. Rear Window Wiper Nozzle
9. Rear Window Wiper Shaft Cap
10. Rear Window Wiper Arm Assembly
11. Rear Window Wiper Blade Assembly

www.cargeek.ir

www.cargeek.ir

Washer Exploded View

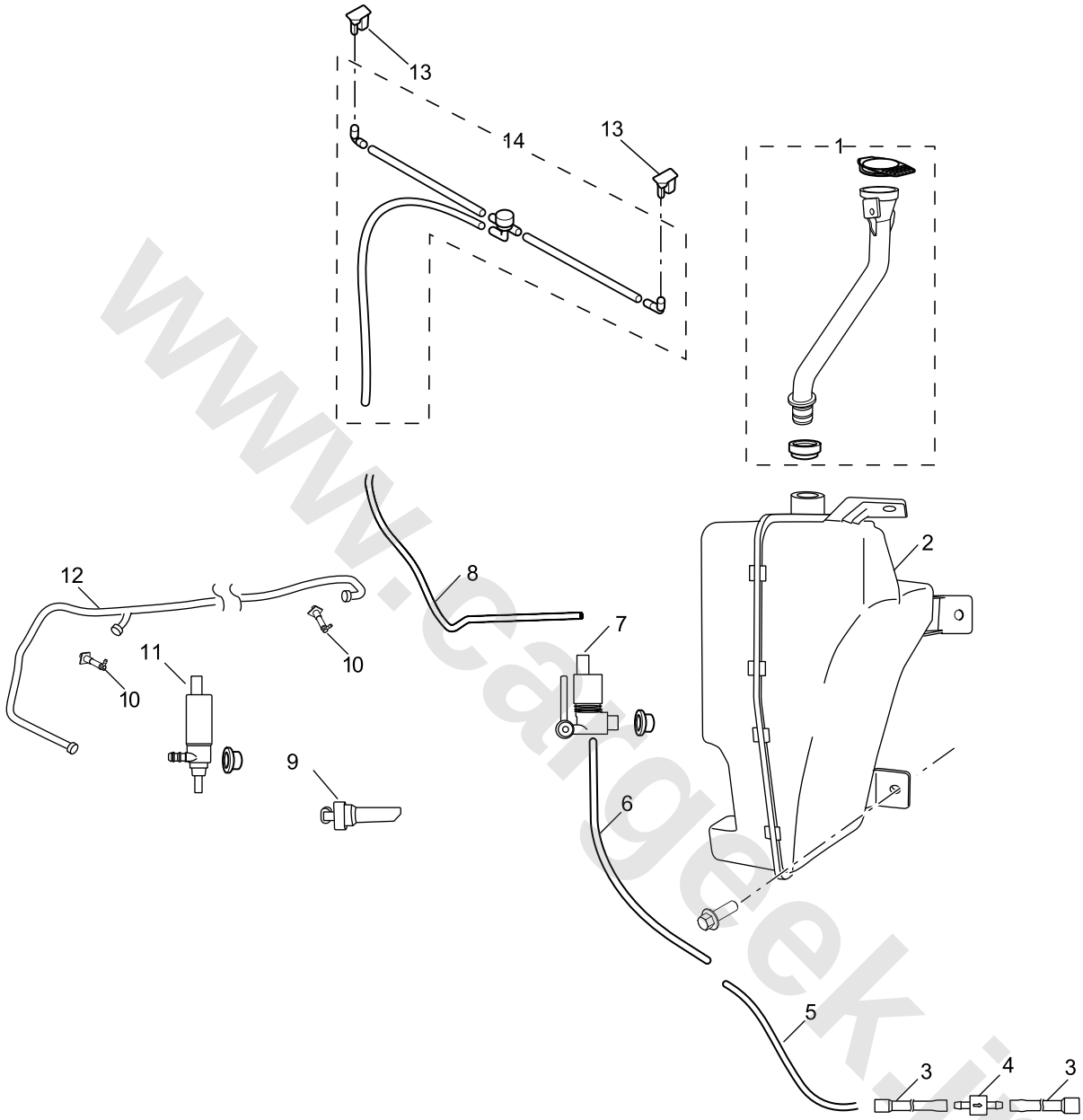

S6810008

1. Washer Reservoir Filler Assembly
2. Washer Reservoir
3. Water Inlet Pipe of Rear Window Washer Nozzle
4. Check Valve
5. Rear Window Washer Water Bellows
6. Central Water Pipe of Rear Window Washer
7. Windshield Washer Pump
8. Windshield Washer Water Bellows
9. Level Sensor
10. Headlamp Washer Nozzle
11. Headlamp Washer Pump
12. Headlight Washer Hose
13. Windshield Washer Nozzle
14. Windshield Washer Hose

www.cargeek.ir

System Control Diagram

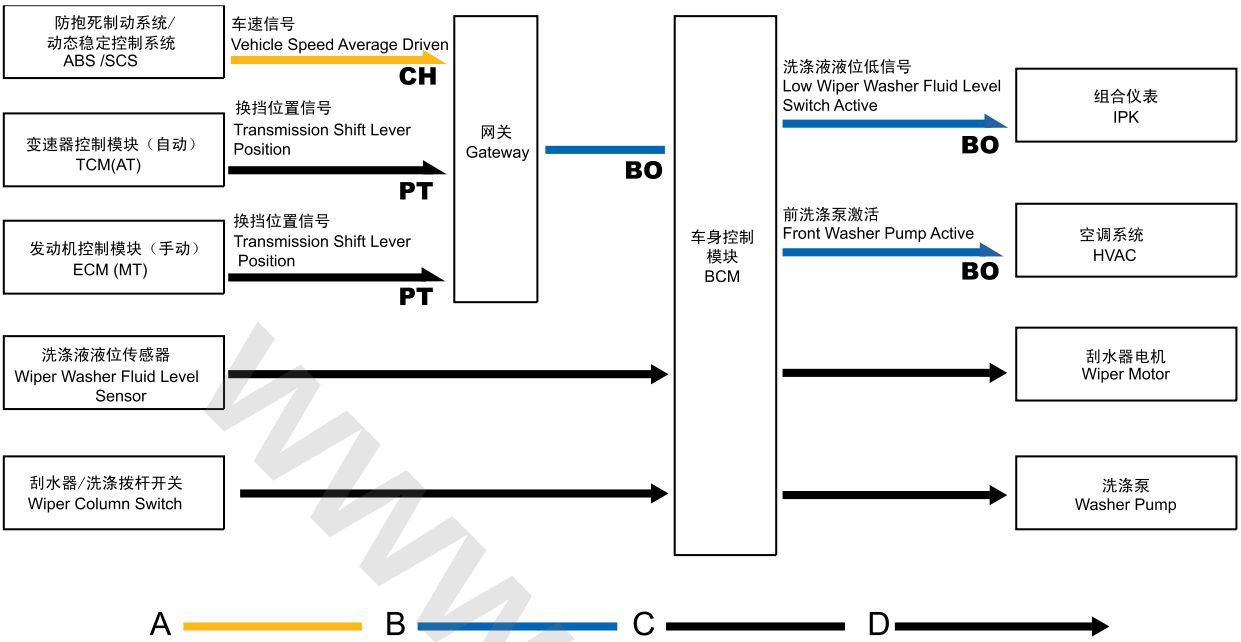

S8361006

A = Chassis HS CAN Bus; B = Body HS CAN Bus; C = Power HS CAN Bus; D = Hard Wire

www.cargeek.ir

Description

Overview

The wiper and washer is controlled by the body control module (**BCM**), which will operate after receiving the command from the driver. All wiper functions are controlled by the wiper/washer lever switch assembly on the right hand side of the steering wheel. The wiper and washer system includes:

- Front Wiper Motor
- Front Wiper Linkage Mechanism
- Two Arms and Blade of Front Wiper
- Two Washer Nozzles (front wiper) and Two Headlamp Washer Nozzles (if fitted)
- Washer Reservoir, Washer Pump and Headlamp Washer Pump (if fitted)
- Rear Wiper Motor
- Rear Wiper Lever and Blade
- Rear Window Washer Nozzle
- Wiper/Washer Lever Switch

The wiper can be operated when the ignition switch is on. All wiper functions will be suspended at the moment of engine starting.

The diagnostic information for the wiper and washer can be read with the scan tool.

Wiper/Washer Lever Switch

The wiper lever switch consists of a 5th gear toggle switch and a rotary switch. The switch of intermittent wipe, low/high speed wipe and "OFF" position are locked, while the switch of single wipe and programmed wipe/wash are unlocked. Use the rotary switch to select intermittent delay.

Functions of Wiper

The wiper system supports the following functions:

- Programmed Wash/Wipe
- Single Wipe
- Low Speed Wipe
- High Speed Wipe
- Intermittent Wipe (adjusted according to speed delay adjustment)

Programmed Wash/Wipe

When pulling the lever switch towards the steering wheel, the washer will operate immediately. After a short interval, the wiper will work with the washer. After the lever switch is released, the wiper will keep wiping for 3 times. After several seconds, the wiper will wipe once more to eliminate the washer fluid on the windshield.

Single Wipe

After the wiper/washer lever switch is pressed and quickly released, the wiper completes a low speed wipe cycle. If the switch is on all the time, the wiper will quickly run, when the switch is off, the wiper will finish a complete wipe cycle at low speed until the motor stops.

Low Speed Wipe

When the switch is turned on and locked in the low speed position, the wiper will wipe continuously at low speed.

High Speed Wipe

When the switch is turned on and locked in the high speed position, the wiper will wipe continuously at high speed.

Intermittent Wipe

The intermittent wipe is controlled by the **BCM**. When the switch is in the intermittent position, the **BCM** starts single low speed wipe operation. The wiper blades are kept in the stop position between two wiper actions until the selected delay period comes to an end. Use the 4-bit rotary switch located at the end of the wiper lever to select the length of delay. If a longer delay time is reselected during intermittent operation, this delay time will be executed for the next wipe operation. If a shorter delay time is reselected during this period, this delay time will be executed immediately. After the intermittent wipe is selected, if the programmed wipe/wash function is required, the programmed wipe/wash operation starts immediately, and the intermittent wipe function will restart after the programmed wipe/wash operation comes to an end and the motor reaches the stop position.

Speed-sensitive Intermittent Wipe

When the switch is in intermittent, low speed or high speed position, the **BCM** will adjust the interval of intermittent wipe according to the vehicle speed. ABS ECU monitors the wheel speed signal and transmits it to the **BCM** through HS CAN bus.

If the wiper switch is in the intermittent position, the **BCM** adjusts the selected delay time by comparing vehicle speed with the resistance corresponding to the intermittent delay rotary switch.

When the wiper switch is ON and locked in low speed, and the vehicle speed is less than 8 km/hr, the **BCM** will activate the intermittent wiper, and the set rotary switch will determine the appropriate delay time.

When the wiper switch is ON and locked in high speed, and the vehicle speed is less than 8 km/hr, then the wiper will work at low speed. When the vehicle speed is above 8 km/hr, the wiper will resume the speed-sensitive intermittent wipe.

www.cargeek.ir

www.cargeek.ir

Wiper

The wiper motor is below the air inlet grille at the bottom of the windshield, which is fitted to a linkage mechanism on the support between the inner and outer compartment walls.

The motor is a DC motor which drives the worm gear through the worm attached to the motor spindle. The outside of the worm gear is connected to the linkage mechanism which can drive the wiper arm attached to the worm gear box at the end of the linkage mechanism.

The motor receives two input signals from the 4-pin connector of the harness. One is a 12V DC power which allows the motor to work at high speed. The other is also a 12V DC power which is in series with a resistance, this can reduce the motor voltage and motor speed. The motor connects the ground by the internal gear rail.

The 4th pin of the motor connector connected with the reset control tab controls the reset switch of the motor.

The wiper arm is fitted to the output shaft of the linkage mechanism. Each wiper arm has a pivot between the arm and arm mounting point. A spring is connected to both ends of the pivot to apply appropriate pressure to the wiper blade on the windshield.

The blade of the boneless wiper is fixed to the wiper arm by clips, which can rotate freely around the mounting point of the wiper arm. This structure ensures that the wiper can clean the windshield at any mode and decrease noise and wind resistance.

Washer

The windshield washer consists of the washer fluid reservoir, reservoir neck, washer pump, headlamp washer pump (if fitted), windshield washer nozzle, headlamp washer nozzle (if fitted), liquid level sensor (if fitted), check valve, hose and hose connector.

The washer reservoir is located in the left wheel house, with a capacity of about 6 liters. The engine compartment is provided with a filler neck with seal cap which can be used to refill the washer reservoir. The washer pump and liquid level sensor (if any) are under the washer reservoir.

When the washer pump is enabled, it will pump the fluid in the washer reservoir into the washer nozzle under the action of pressure. The check valve of the tail gate washer can prevent fluid from flowing back to the washer reservoir through the nozzle and hose, and thus ensures the washer is instant available.

www.cargeek.ir

www.cargeek.ir

Operation

Overview

The front/rear wipers and washers are controlled by the **BCM**. When the **BCM** receives ON signal of the washer/wiper lever switch connected by hard wire, it drives the washer pump and wiper motor to work. The bidirectional washer pump provides washer fluid for the front and rear windows, the washer is directly controlled by the **BCM**, and the rear washer pump is directly controlled by the rear window washer switch.

Front Wiper/Washer

The front wiper includes the **BCM**, washer/wiper lever switch and two relays. One of the relay (1)is used to turn on/off the wiper, and the other (2) is used to control the wiper speed. When the **BCM** receives signals from the washer/wiper lever switch, it drives the front wiper to work by closing the two wiper motors in the engine compartment fuse box.

The switches for single wipe, intermittent wipe, low/high speed wipe form a closed circuit with the **BCM** through relay 1 or 2.

When the ignition switch is in the 1st/2nd gear, the output status of the front wiper is as follows:

	Relay Switch Status	
Front Wiper Mode	Switch 1	Switch 2
Stop	0	0
Single Wipe	1	0
Intermittent Wipe	1	0
Low Speed Wipe	1	0
High Speed Wipe	1	1
0 = Disconnected 1 = Closed		

High Speed Wipe

When choosing high speed mode for the front wiper, the fuse of the engine compartment fuse box will send the corresponding signal to the wiper relay. When relay 2 closes, it connects the motor directly through the resistor for deceleration, at this stage, the wiper works at high speed.

Low Speed Wipe

When choosing low speed mode for the wiper, the fuse of the engine compartment fuse box will send the corresponding signal to the wiper relay. The signal passes through the normally-closed contact of the 2 wiper relays, the signal from relay 2 is connected with the motor by a resistor. The resistor reduces the power, so the wiper works at low speed.

Intermittent Wipe

When the wiper works at intermittent mode, the switches of the wiper/washer lever correspond to different resistance. The **BCM** keeps monitoring this value so as to trigger the corresponding counter and control wiper delay.

When the **BCM** timer reaches the end of the selected delay period, the front wiper completes a low speed cycle and then stops. The **BCM** will start the timer to initiate another selected delay period before operating the wipers again.

Single Wipe

When the **BCM** receives a valid single wipe request from the front wiper, it will control the front wiper to work at low speed. If the single wipe request is valid, the wiper will keep working at low speed.

Programmed Wash/Wipe

When the ignition switch is in the 2nd gear, and the front wiper switch is activated, the **BCM** controls the front wiper to operate at low speed, enables the washer pump and triggers the counter. When the counter value achieves the set value, the **BCM** closes the relay, and the wiper starts to work. When the driver release the washer/wiper lever, the washer pump and front wiper stop.

Caution: *During engine start, the windshield washer is disabled.*

Front Wiper Stop

With the ignition switch ON, turn the wiper switch of the washer/wiper lever to "OFF" position, the wiper relay disconnects immediately and the front wiper then stops promptly.

If turn off the ignition switch when the wiper is working, the wiper relay will remain closed, even if the washer/wiper lever is in "OFF" position, when the wiper shifts to the "RESET" position at low speed, the relay disconnects automatically and the wiper stops working.

Front Wiper Failure Protection

When the wiper is enabled, the **BCM** monitors the position signal of the front wiper switch. If the ignition switch is in "OFF" position, but the switch of the front wiper remains in the original status, the relay of the front wiper will also disconnect automatically.

Rear Wiper/Washer

When the **BCM** receives a valid request from the rear wiper switch, it will control the corresponding relay to work.

Intermittent Wipe

When the ignition switch is in the 1st/2nd gear, if the **BCM** detects that the rear wiper switch is ON, it controls the rear wiper to work at low speed, enables the washer pump and triggers the counter. When the counter value achieves the set value, the **BCM** closes the relay, and the rear wiper starts to work.

www.cargeek.ir

www.cargeek.ir

Programmed Wiper

When the rear wiper switch is activated, the washer pump is enabled, and the **BCM** monitors the status of the rear wiper switch and counts. If the switch is not released, the **BCM** will activate the rear wiper relay to start the rear wiper.

R Gear Wipe

When the ignition switch is in the 1st gear, and the front washer/wiper lever switch is in high speed/low speed/intermittent mode, if turn the shift lever to R gear, the **BCM** will apply the rear wiper relay automatically and activate the rear wiper, this does not affect the front wiper.

Rear Window Washer/ Wiper Failure

If the tail gate is open, the wiper/washer of the rear window will be disabled for any mode.

If the **BCM** detects that the tail gate is open when the rear wiper is working, the rear wiper will be disabled immediately.

After the tail gate is closed, the rear wiper returns to normal state after appr. 5s, this provides enough time for the user to take his hands away from the wash/wipe area.

Operation of Headlamp Washer (if any)

When the ignition switch is in the 1st/2nd gear, the low beam headlamp is activated and the windshield washer fluid is sufficient, pull the washer lever, the **BCM** drives the headlamp washer pump to work by closing the external relay.

If the ignition switch is off or the washer fluid is insufficient during the operation cycle of the headlamp washer, the **BCM** will not drive the washer pump relay to close. If the headlamp is off during the operation cycle of the headlamp washer, the **BCM** will keep the relay closed until the current operation cycle of the washer is completed.

www.cargeek.ir

www.cargeek.ir

www.cargeek.ir

Service Procedures

Windshield Wiper Arm Assembly

Remove

1. Open the engine hood.
2. Take off the mounting shaft cover of the wiper arm.

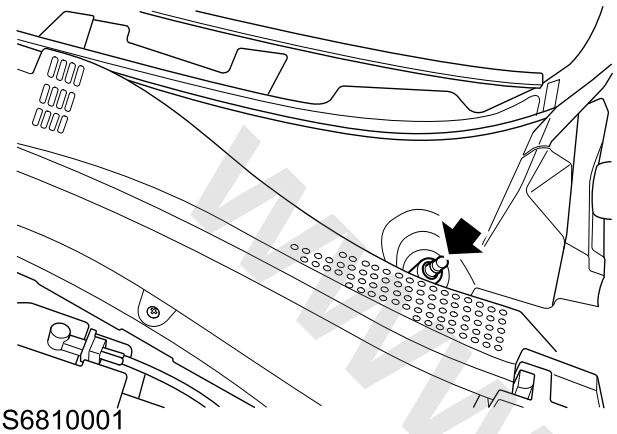

S6810001

3. Take off the nuts fixing the wiper arm to the linkage mechanism.
4. Remove the wiper arm assembly from the linkage mechanism.

Refit

1. Fit the wiper arm to the linkage mechanism.
2. Fit the nuts to the pivot of mechanism, tighten to **25–35Nm**.
3. Fit the mounting shaft cover of the wiper arm.
4. Close the engine hood.

Windshield Wiper Linkage and Motor Assembly

Remove

1. Disconnect the battery negative.
2. Remove the wiper arm assembly at the driver side.

Wiper Arm Assembly Remove

3. Remove the front passenger side wiper arm assembly.

Wiper Arm Assembly Remove

4. Remove the A/C air inlet grille assembly.

A/C Air Inlet Grille Assembly Remove

5. Remove 3 bolts fixing the linkage mechanism to the body.

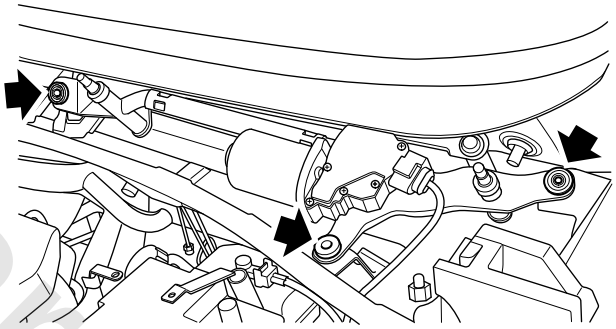

S6810002

6. Disconnect the connector of the windshield wiper motor.
7. Remove the windshield wiper linkage and motor assembly.

Refit

1. Connect the connector to the windshield wiper motor.
2. Fit the windshield wiper linkage and motor assembly, and tighten the bolt to **8–10Nm**.
3. Fit the A/C air inlet grille assembly.

A/C Air Inlet Grille Assembly Refit

4. Fit the front passenger side wiper arm assembly.

Wiper Arm Assembly Refit

5. Fit the wiper arm assembly at the driver side.

Wiper Arm Assembly Refit

6. Connect the battery negative.

www.cargeek.ir

www.cargeek.ir

Windshield Wiper Blade Assembly

Remove

1. Lift the wiper arm away from the windshield.
2. Press the button of the wiper arm, pull the upper part of the wiper blade outwards to allow it out of the wiper arm.
3. Remove the wiper blade from the arm.

Refit

1. Put the connector of new wiper blade in the slot of wiper arm.
2. Push the wiper blade towards the arm until the blade is fully engaged.
3. Put the wiper assembly back to the windshield, and check if the blade is fitted correctly to the arm.

Washer Reservoir Assembly

Remove

1. Disconnect the battery negative cable.
2. Remove the front bumper.

Front Bumper Remove

3. Remove the front wheel house liner.

Front Wheel House Liner Remove

4. Prepare an appropriate container to collect the windshield fluid.
5. Remove the bolt fixing the fluid reservoir neck to the headlamp bracket and remove the reservoir neck from the washer reservoir.
6. Remove 4 bolts fixing the washer reservoir to the body.

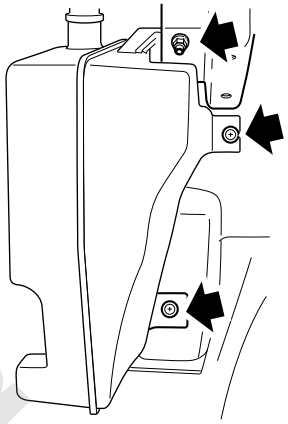

S6810004

7. Remove the washer reservoir hose from the washer reservoir.
8. Disconnect the washer pump connector, and remove the washer reservoir.

Refit

1. Locate the washer reservoir to the body and secure with bolts, then tighten the bolt to **4–6Nm**.
2. Connect the washer pump connector and washer reservoir hose.
3. Fit the reservoir neck to the fluid reservoir, fit it to the headlamp bracket, and tighten to **4–6Nm**.
4. Fit the front wheel house liner.

Front Wheel House Liner Refit

5. Fit the front bumper.

Front Bumper Refit

6. Connect the battery negative cable.

www.cargeek.ir

www.cargeek.ir

Washer Pump

Remove

1. Disconnect the battery negative.
2. Remove the front bumper.

☞ **Front Bumper Remove**

3. Disconnect the washer pump connector.
4. Remove the washer hose from the washer pump.
5. Remove the washer pump from the washer reservoir.

Refit

1. Fit the washer hose on the washer pump.
2. Fit the washer pump onto the washer reservoir.
3. Connect the washer pump connector.
4. Refit the front bumper.

☞ **Front Bumper Refit**

5. Connect the battery negative.

Rear Window Wiper Arm Assembly

Remove

1. Take apart the rear window wiper arm cover, remove the nuts fixing the rear window wiper arm assembly to the rear window.

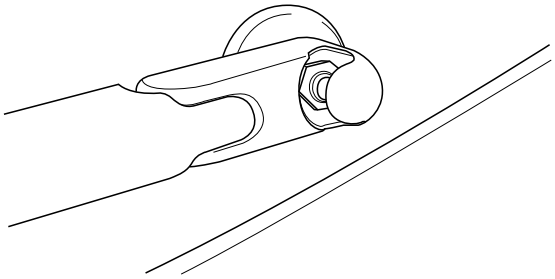

2. Remove the rear window wiper arm assembly.

Refit

1. Fit the rear window wiper arm to the wiper motor shaft.
2. Fit the nuts to the shaft, and tighten to **8–10Nm**.
3. Ensure that the blade tape is fitted to the correct initial position and is aligned with the dot on the black printing edge of the glass.

www.cargeek.ir

www.cargeek.ir

Rear Wiper Blade Assembly

Remove

1. Raise the wiper blade from the windshield.
2. Take out the blade from the wiper arm and remove while pressing the safety clips.

Refit

1. Engage the wiper blade assembly into safety clips, and refit on the wiper arm assembly.
2. Secure the wiper arm to the windshield.

Rear Window Wiper Motor

Remove

1. Disconnect the battery negative.
2. Remove the rear window wiper arm assembly.

Rear Window Wiper Arm Assembly Remove

3. Remove the seal ring of the rear wiper motor from the wiper motor output shaft.
4. Open the tail gate and remove the tail gate trim panel.

Tail Gate Trim Panel Remove

5. Disconnect the electrical connector and rear washer water pipe.
6. Remove 2 nuts and 1 screw fixing the rear window wiper motor assembly to the tail gate.

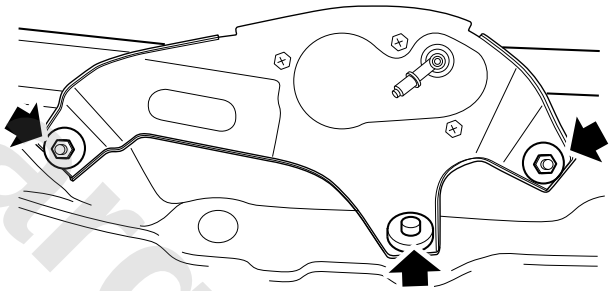

S6810005

7. Remove the rear window wiper motor assembly.

Refit

1. Fit the rear window wiper linkage mechanism assembly with 2 nuts and 1 screw, and tighten them to **8–10Nm**.
2. Connect the electrical connector and rear washer water pipe.
3. Fit the tail gate trim panel.

Tail Gate Trim Panel Refit

4. Fit the seal ring and windshield wiper arm assembly.

Rear Window Wiper Arm Assembly Refit

5. Connect the battery negative.

www.cargeek.ir

www.cargeek.ir

Lighting

Specifications

Torque

Description	Value
Screw-Front courtesy and map reading lamp to roof	3–5Nm

www.cargeek.ir

www.cargeek.ir

Description and Operation

System Layout

Interior Lighting Layout

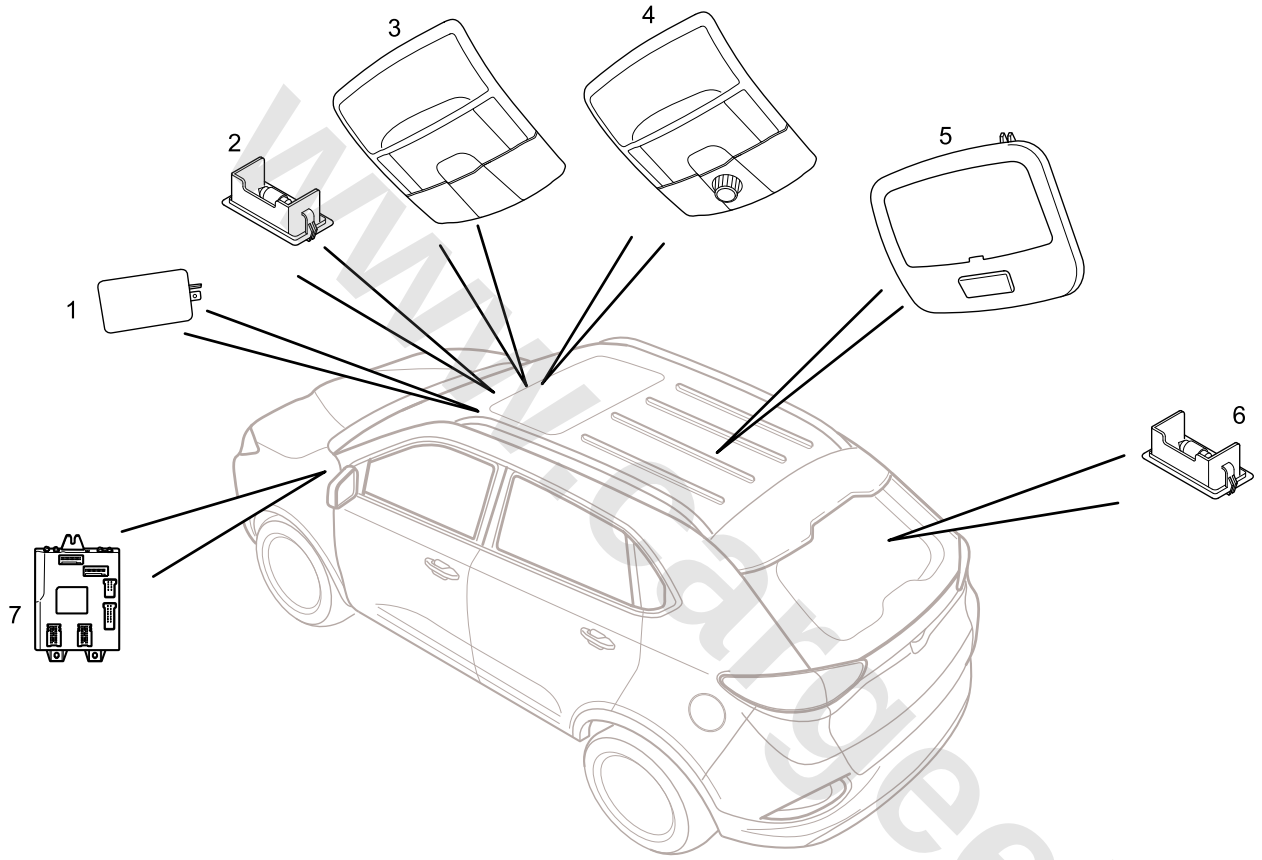

S6510013

1. Vanity Mirror Lamp (if fitted)
2. Glove Box Lamp (if fitted)
3. Front Reading Lamp
4. Front Reading Lamp with Sunroof Switch
5. Rear Reading Lamp
6. Luggage Compartment Lamp
7. **BCM**

www.cargeek.ir

www.cargeek.ir

System Control Diagram

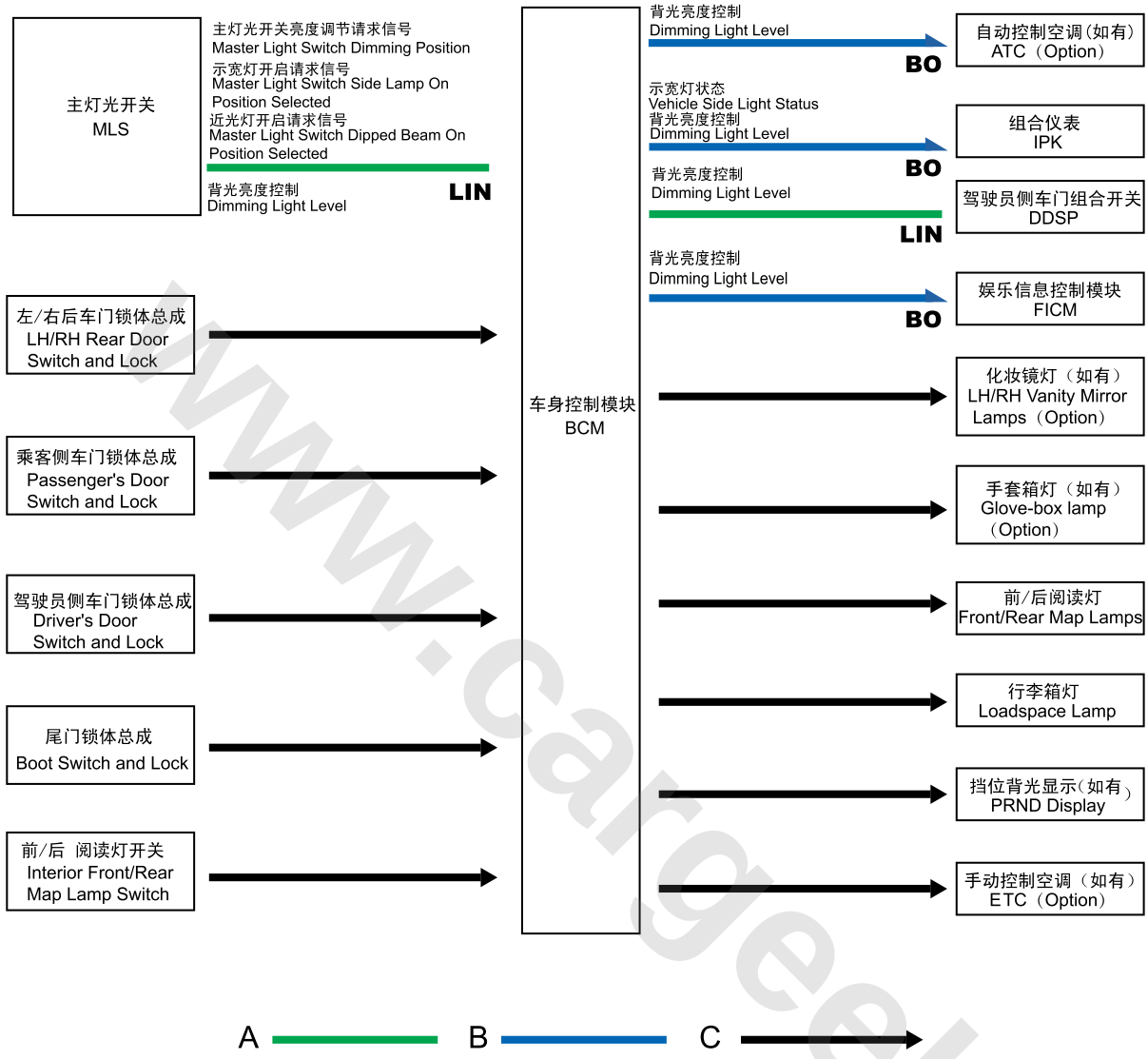

S8361007

A = LIN Bus; B = Body HS CAN Bus; C = Hard Wire

www.cargeek.ir

www.cargeek.ir

Description

Overview

The interior lighting system is controlled by the **BCM** at the left front panel of the A pillar.

Interior lighting system includes:

- Front Reading Lamp
- Rear Reading Lamp
- Glove Box Lamp (if fitted)
- Vanity Mirror Lamp (if fitted)
- Luggage Compartment Lamp
- **LED** of Instrument Panel and Remote Key Port

Front Reading Lamp

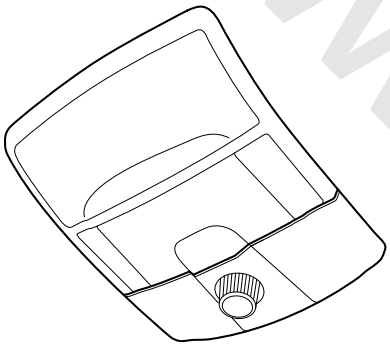

S4410002

The front reading lamp is in the central interior roof trim panel above the windshield. The assembly is fixed by 4 screws and 3 spring clips to the interior roof trim panel.

The front reading lamp assembly contains 3 switches and 3 bulbs. For models with high configuration, the front reading lamp is fitted with the sunroof switch and bluetooth microphone of the car hands-free phone. The device is connected by four-pin connector and roof harness.

The front reading lamp bulb applies the single filament bulb. The front reading lamp lens is subtransparent, this can ensure even interior illumination.

When replacing the bulb, remove the lamp lens, slightly pull the bulb to remove it; and push it into the lamp holder to fit it.

Rear Reading Lamp

The rear reading lamp assembly is in the center behind the interior roof trim panel. The rear reading lamp assembly is on the interior roof trim panel, and carefully pry the assembly to remove it from the interior roof trim panel. The device is connected to the rear reading lamp and roof harness by 3-pin connectors.

Luggage Compartment Lamp

The luggage compartment lamp is on the interior trim panels at the two sides of the luggage compartment. The outside is a plastic case, and the inside contains the lens and lamp clamp. When the luggage compartment is open, the luggage compartment lamp will work automatically. The luggage compartment lamp applies a single filament bulb.

Glove Box Lamp (if fitted)

The glove box lamp is in the hole above the right glove box. This lamp is connected with the 2-pin connector via the microswitch. The microswitch outside the right glove box is controlled by the hinge mechanism of the glove box.

When opening the cover, the glove box lamp illuminates automatically. The glove box lamp bulb is a monofilament bulb.

Vanity Mirror Lamp (if fitted)

The vanity mirror lamp is on the roof interior above the sun visor, with the semitransparent lens, carefully open the lens to remove the bulb.

The vanity mirror lamp is connected to the roof harness by 2-pin connectors. When opening the mirror cover, the mirror lamp illuminates.

Bulb Specification

Lamp	Bulb Type	Voltage Power
Front Reading Lamp	W5W	12V 5W
Rear Reading Lamp	C10W	12V 10W
Luggage Compartment Lamp	C10W	12V 10W
Glove Box Lamp	C10W	12V 10W

www.cargeek.ir

Operation

Overview

The **BCM** receives signals of the interior lighting system via the **CAN**. When the **BCM** receives the reading lamp signal, door switch signal or tail gate OPEN signal, it will illuminate the corresponding lamp inside the vehicle. When the **BCM** detects that the headlamp is on or it detects that the light is dim by the solar/light sensor (if any), the **BCM** illuminates the backlight of the instrument panel and some switches.

The **BCM** controls the range of the interior lighting system:

1. Interior Door Lighting Controlled by **PWM**

   Press the roof lamp switch to illuminate the corresponding lamp. Interior lamps controlled by the **PWM** include the front/rear reading lamps, switch backlight and **LED** indicator lamp. The interior lamp illuminated will turn off at the time of engine start, but it will resume automatically afterwards.

   The interior door lighting system can be controlled by auto mode or manual mode.

   *Auto Mode **PWM** Control* :

   No need to press the switch, the **BCM** will control the working status of the interior lamp according to the signal received.

   The interior lamp will illuminate automatically under the following conditions:

   a. When pressing the UNLOCK button on the remote key, and use the mechanical key or PEPS module (if fitted) to unlock the door, the front/rear reading lamps illuminate gradually. If the door is not unlocked within 30s, the front/rear reading lamps will dim gradually.

   b. After the ignition switch is off, the reading lamp will illuminate gradually. If the door is not unlocked within 30s, the reading lamps will dim gradually.

   c. If the interior lamps illuminate, all doors are in a closed state. When the ignition switch is shifted to other gears from the 1st gear, the interior lamps will dim gradually in 30s.

   d. When you press the LOCK button on the remote key or lock the doors with the mechanical key/PEPS module (if fitted), the interior lamps will dim gradually.

   e. When all doors are in the closed state and the ignition switch is in the 1st gear, the interior lamps will dim gradually.

Note: *In auto mode (**PWM** control), once the impact sensor is triggered, the interior lamp will illuminate immediately, and when the interior lamp switch is pressed, the interior lamp will be disabled at once.*

   *Manual Mode **PWM** Control* :

   Press the master switch on the front reading lamp assembly to turn on/off the front/rear reading lamps. When the interior lamp is turned on/off by manual manner, the the auto delay function will be cancelled. In this mode, if lock the door with the remote control or mechanical key, the auto mode (**PWM** control) function will resume.

   Manual shift between control modes:

   In auto mode, long press the interior lamp switch for more than 5s to cancel the auto mode; and when the auto mode is disabled, long press the interior lamp switch for more than 5s to activate the auto mode.

2. The interior door lighting delay power control includes:

   a. Front Reading Lamp

   b. Rear Reading Lamp

   c. Left/Right Vanity Mirror Lamps (if fitted)

   d. Glove Box Lamp (if fitted)

Delay Control (if fitted)

The **BCM** controls the interior lighting system by the relay. The interior lamp includes reading lamp, vanity mirror lamp (if fitted) and glove box lamp (if fitted). Under the following situations, the **BCM** controls the delay of the front/rear reading lamps by disconnecting the delay relay.

- When the ignition switch is in the 1st gear
- When the UNLOCK button on the remote key is pressed, and the door is unlocked by the PEPS module (if fitted) or mechanical key

The delay function may fail under the following conditions:

- 15min since the ignition is OFF
- When the LOCK button on the remote key is pressed, and the door is locked by the PEPS module (if fitted) or mechanical key
- When vehicle is in the anti-theft state
- When the vehicle is locked externally
- When the ignition switch in "START" position

LEDInterior Backlight Illumination Control

When the width lamp is enabled or the **BCM** determines that the signal of the solar/light sensor (if fitted) is for night driving, the **LED** and backlight lamp on the instrument panel illuminate. It also provides backlight **LED** illumination for the ignition switch (if fitted), entertainment system, cigar lighter, rearview mirror control button, keyless ignition switch (if fitted), upper/lower center console switch, auxiliary A/C

www.cargeek.ir

instrument panel, HMI (front panel) and hazard warning lamp, etc.

The illumination of the **LED** can be controlled by the thumb wheel of the instrument panel backlight (if fitted).

www.cargeek.ir

www.cargeek.ir

Service Procedures

Master Lighting Switch (MLS)

Remove

1. Disconnect the battery negative.
2. Pry up the clips of the instrument panel left end panel, and remove the left end panel.
3. Put the hand inside the instrument panel left end to release the MLS clips and push the MLS outwards.
4. Disconnect the electrical connector of MLS and remove the MLS.

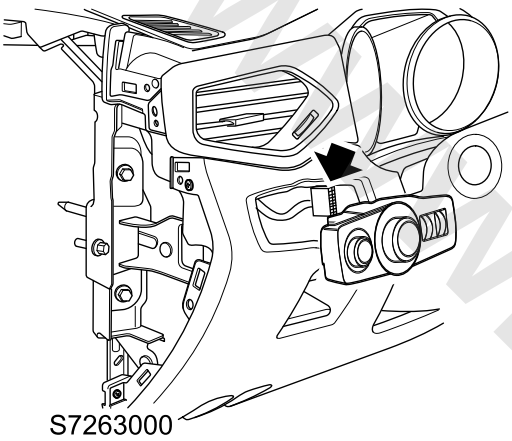

S7263000

Refit

1. Connect the electrical connector of MLS and push MLS to the mounting hole, and ensure the clips are fully engaged.
2. Fit the left end plate of the instrument panel.
3. Connect the battery negative.

Front Reading Lamp Assembly

Remove

1. Disconnect the battery negative.
2. Remove the front reading lamp light-distributing mirror and open the glasses box.
3. Remove 4 screws securing the front reading lamp.

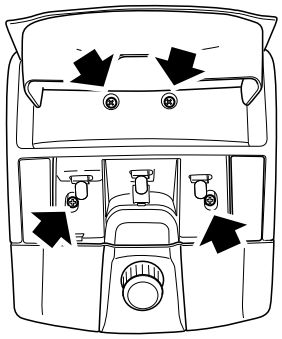

S4410003

4. Release the circlip securing the front reading lamp to the roof interior trim, and remove the lamp from the interior trim panel.
5. Disconnect the connector of the front reading lamp and remove the lamp assembly.

Refit

1. Connect the connector of the front reading lamp assembly, align the screw hole of front reading lamp with the hole in the roof interior trim panel and clip the circlip on the roof interior trim panel.
2. Fit the screw into the plastic clip of the body bracket and tighten to **3–5Nm**.
3. Fit the front reading lamp light-distributing mirror.
4. Connect the battery negative.

www.cargeek.ir

Rear Reading Lamp Assembly

Remove

1. Disconnect the battery negative.
2. Release 3 circlips securing the front part of the lamp assembly to the roof interior trim, release the lamp assembly.
3. Disconnect the connector and remove the rear reading lamp.

Refit

1. Connect the connector of the rear reading lamp assembly, align the rear reading lamp with the hole in the roof interior trim panel and clip the circlip on the roof interior trim panel.
2. Connect the battery negative.

www.cargeek.ir

www.cargeek.ir

Lamps

Specifications

Torque

Description	Value
Screw-Rear fog lamp to rear bumper	1.1–1.3Nm
Bolt-Day time running lamp to front bumper	3–5Nm
Bolt-Front fog lamp to front bumper	3–5Nm
Screw-Headlamp lighting calibration	0.1–0.5Nm
Bolt - head lamp to bodywork	3–5Nm
screw - DHL slave ECU to front lamp	5–7Nm
Screw-CHMSL to plaque	2–3Nm
Nut- tail lamp to tail gate	2.7–3.3Nm
Screw- tail lamp to bodywork	2.7–3.3Nm
Screw-DHL module to body	6–8Nm
Bolt -Front suspension height sensor to body	7–10Nm
Bolt - ASM-RR height sensor to bodywork	7–10Nm

www.cargeek.ir

www.cargeek.ir

www.cargeek.ir

Description and Operation

System Layout

Exterior Lighting Layout

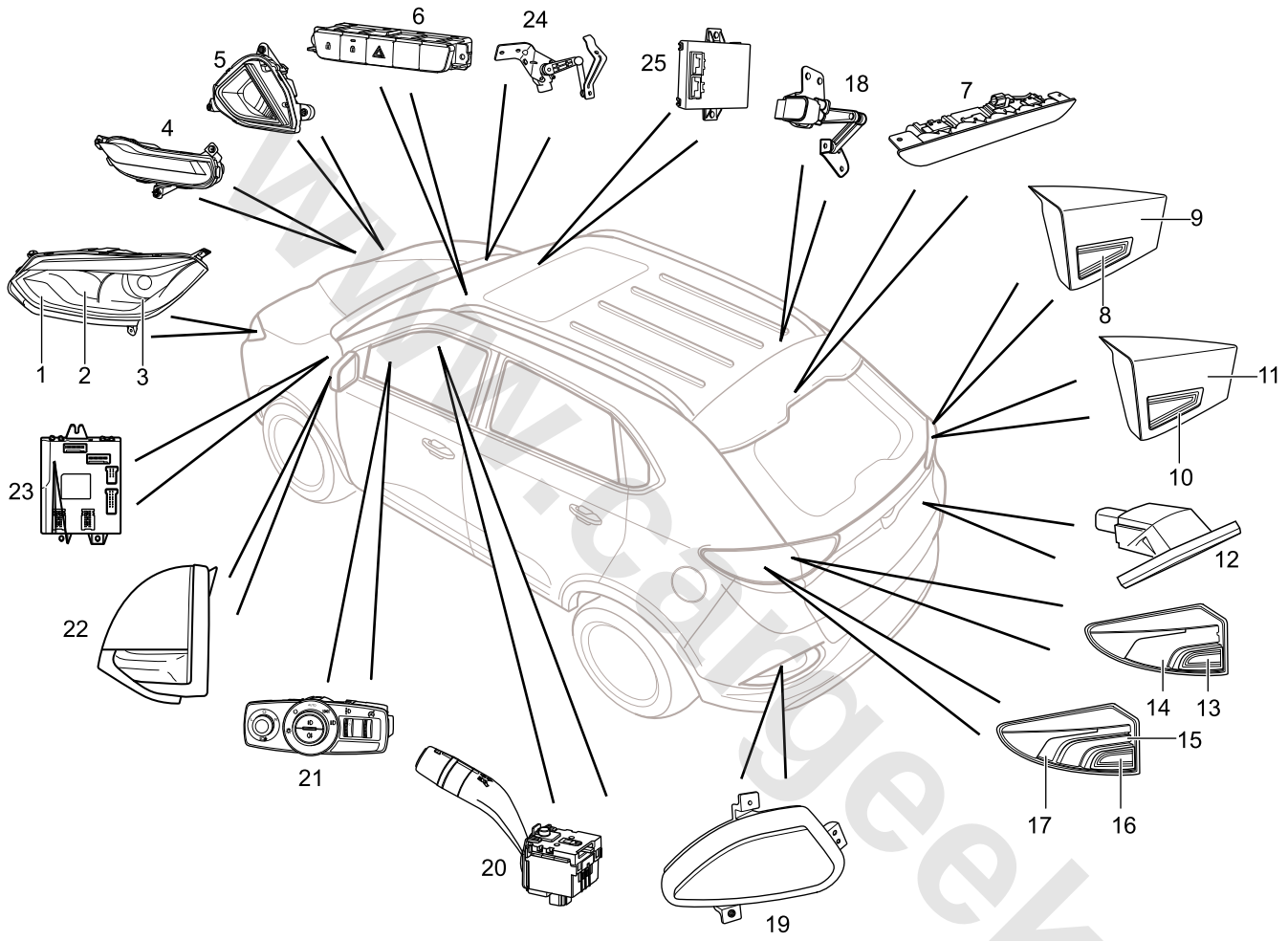

S6510006

1. Front Direction Indicator Lamp
2. High Beam & Position Lamp
3. Low Beam
4. Daytime Running Lamp
5. Front Fog Lamp
6. Hazard Warning Lamp Switch
7. High-mounted Stop Lamp
8. Reverse Lamp (**LED**)
9. Brake Lamp/Tail Lamp (**LED**)
10. Reverse Lamp (bulb)
11. Tail Lamp (bulb)
12. License Plate Lamp
13. Rear Direction Indicator Lamp (**LED**)
14. Brake Lamp/Tail Lamp (**LED**)
15. Tail Lamp (bulb)
16. Rear Direction Indicator Lamp (bulb)
17. Brake Lamp/Tail Lamp (bulb)
18. Headlamp Levelling Rear Suspension Height Sensor
19. Rear Fog Lamp
20. Direction Indicator Lamp/High Beam Lever Switch
21. Master Light Switch (**MLS**)
22. Side Direction Indicator Lamp
23. Body Control Module (**BCM**)
24. Headlamp Levelling Front Suspension Height Sensor
25. Dynamic Headlamp Levelling Control Module

www.cargeek.ir

www.cargeek.ir

System Control Diagram

Exterior Lighting Control Diagram

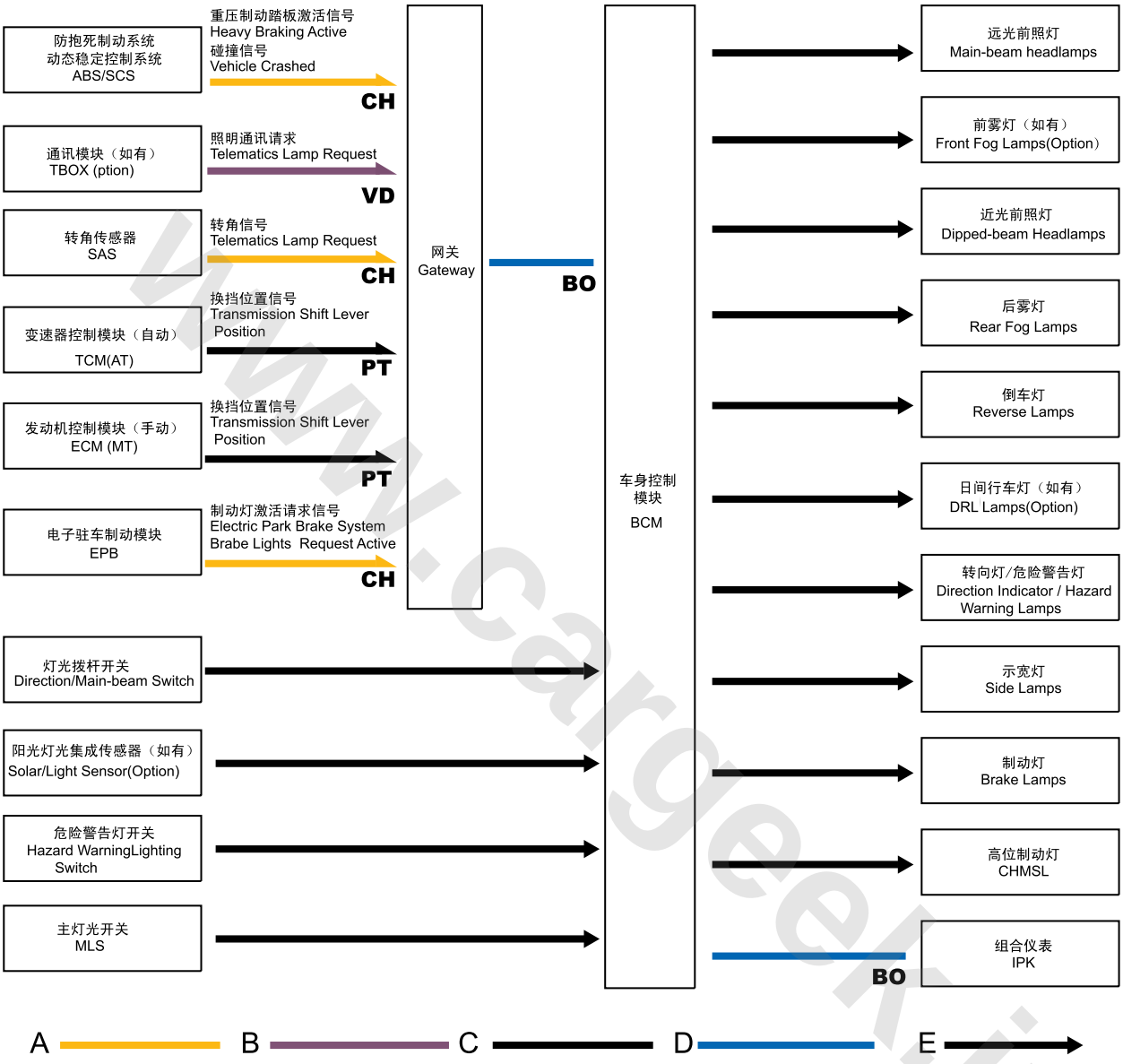

S8361008

A = Chassis HS CAN Bus; B = Diagnostic HS CAN Bus; C = Power HS CAN Bus; D = Body HS CAN Bus; E= Hard Wire

www.cargeek.ir

Dynamic Headlamp Leveling Control Diagram

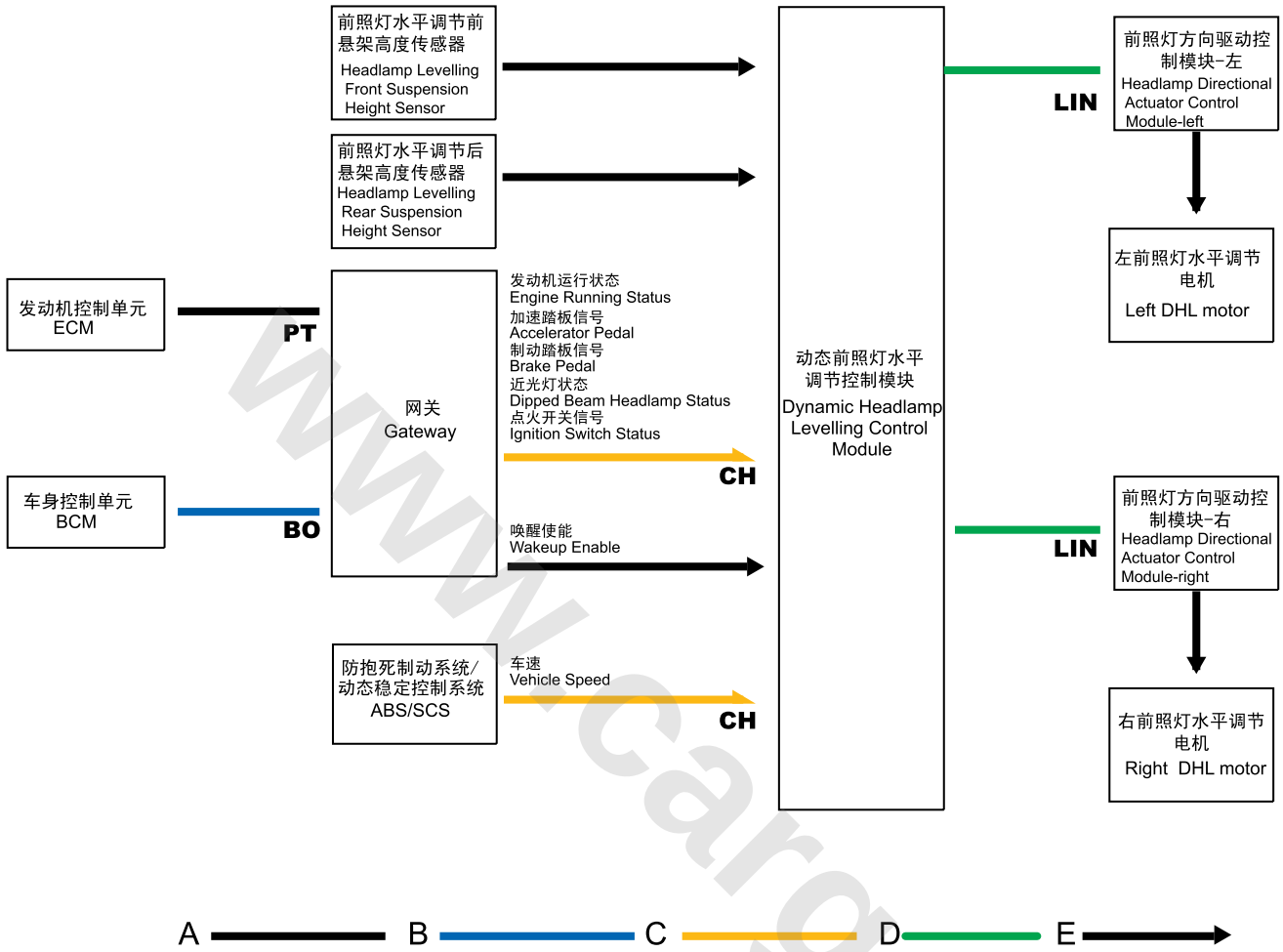

S8361009

A = Power HS CAN Bus; B = Body HS CAN Bus; C = Chassis HS CAN Bus; D = LIN Bus; E = Hard Wire

www.cargeek.ir

Description

Overview

The exterior lighting system includes all external lamps which are controlled by the master light switch and auto lamp control sensor. Exterior lighting system includes:

- Headlamp
- Tail Lamp
- Rear Combination Lamp
- Rear License Plate Lamp
- Direction Indicator Lamp/Side Direction Signal Lamp
- Brake Lamp/High-mounted Stop Lamp
- Front Fog Lamp
- Daytime Running Lamp
- Rear Fog Lamp

Master Light Switch (MLS)

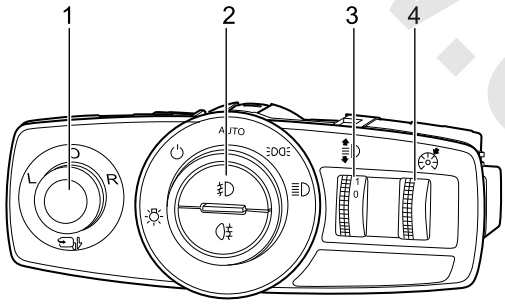

S6510011

1. Exterior Mirror Control Switch
2. Illumination Mode Selection Switch
3. Headlamp Height/Dimming Thumb Wheel
4. Instrument Panel Backlight Dimming Thumb Wheel

Headlamp

The headlamp is fixed on the upper radiator beam by screws. There are two types of headlamps: halogen headlamp and xenon headlamp.

The halogen headlamp assembly is composed of the low beam, high beam, front width lamp and front direction indicator lamp. The halogen headlamp applies halogen bulb, and the small bulb beside the high beam bulb is used for the width lamp. The xenon headlamp assembly consists of the high beam, low beam, front width lamp and front direction indicator lamp. The low beam applies xenon bulb, and the high beam, front width lamp and front direction indicator lamp use halogen bulbs. Each halogen bulb is equipped with a base which guarantees correct mounting of the bulb. The rear of the headlamp assembly is protected by a seal rubber cover to prevent water and dust.

Tail Lamp

The tail lamp is fixed on the body with screws. The tail lamp includes bulb tail lamp and **LED** tail lamp.

The bulb tail lamp assembly includes the brake lamp/rear width lamp, rear width lamp and rear direction indicator lamp. The brake lamp/rear width lamp applies twin-filament bulbs which are in the center area outside the tail lamp assembly, and the rear width lamp and rear direction indicator lamp applies single filament bulbs, the bulb of the rear width lamp is in the center area inside the tail lamp assembly. The **LED** tail lamp assembly contains the brake lamp/rear width lamp and rear direction indicator lamp, the brake lamp/rear width lamp is a C-**LED**, and the rear direction indicator lamp uses single filament bulbs.

Rear Combination Lamp

The rear combination lamp is fixed to the tail gate by nuts, which includes bulb rear combination lamp and **LED** rear combination lamp.

The bulb rear combination lamp assembly consists of the rear width lamp and reverse lamp. The tail lamp and reverse lamp apply single filament bulbs, and the **LED** rear combination lamp assembly consists of the rear width lamp and reverse lamp. The rear width lamp is a C-**LED**, and the reverse lamp applies single filament bulbs.

Rear License Plate Lamp

The two rear license plate lamps are inside the lower molding of the tail gate.

Direction Indicator Lamp

The bulb of the direction indicator lamp is under the headlamp assembly (near the inside). The rear direction indicator lamp is under the tail lamp assembly (near the inside). The bulb of the side direction signal lamp is integrated in the exterior rearview mirror.

Direction Indicator Lamp/High Beam Lever Switch

The direction indicator lamp/headlamp high beam lever switch is located at the left side of the steering column, it is used to control the following components:

- Left Direction Signal Lamp
- Right Direction Signal Lamp
- Headlamp Flash
- Low Beam/High Beam Switching

High-mounted Stop Lamp (CHMSL) and Brake Lamp Switch

The CHMSL is in the upper side of the rear window, which consists of 5 bulbs and is fixed by 3 bolts to the interior trim panel of the tail gate.

www.cargeek.ir

www.cargeek.ir

The brake lamp switch is connected with the pedal bracket behind the instrument panel. The brake lamp switch is a Hall effect proximity sensor which is activated by the brake pedal.

The brake pedal is on the engine compartment bulkhead (pedal bracket). The vacuum booster input rod is linked to the brake pedal with rod pin and U-clamp.

Front Fog Lamp

The front fog lamp is on the front bumper and each front fog lamp includes a halogen bulb.

Daytime Running Lamp (if fitted)

The daytime running lamp is the rectangular **LED** under the front fog lamp of the front bumper.

Rear Fog Lamp

The rear fog lamp is on the rear bumper. The rear fog lamp bulb is a single filament bayonet-socket bulb which extends from the lens of the rear fog lamp and illuminates the area around the lens.

DHL

The DHL system is an intelligent system. The main function of the system is to provide an optimum road illumination for the driver.

End View and Pin Information of DHL Module Harness Connector BY113

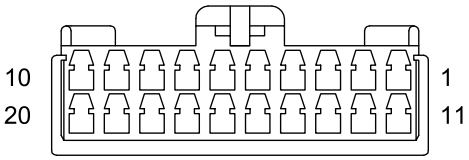

Pin No.	Description
1	—
2	—
3	—
4	—
5	Lin Signal
6	CAN L
7	CAN H
8	—
9	—
10	—
11	Front Height Sensor Ground
12	Rear Height Sensor Ground
13	Front Height Sensor Signal
14	Rear Height Sensor Signal
15	Wake-up Enabled
16	—
17	Front Height Sensor Power
18	Rear Height Sensor Power
19	—
20	—

End View and Pin Information of DHL Module Harness Connector BY114

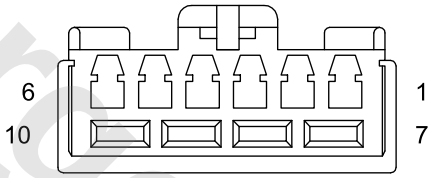

Pin No.	Description
1	—
2	—
3	—
4	—
5	—
6	—
7	Ground
8	KL.30
9	—
10	—

www.cargeek.ir

www.cargeek.ir

End View and Pin Information of DHL Module Harness Connector BY115

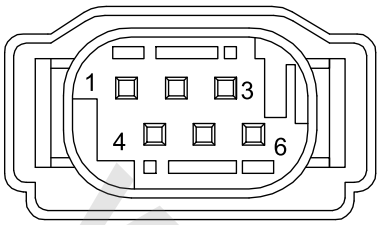

Pin No.	Description
1	Front Height Sensor Ground
2	—
3	—
4	Front Height Sensor Signal
5	Front Height Sensor Power
6	—

End View and Pin Information of DHL Module Harness Connector BY116

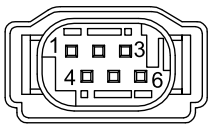

Pin No.	Description
1	Rear Height Sensor Ground
2	—
3	—
4	Rear Height Sensor Signal
5	Rear Height Sensor Power
6	—

Bulb Specification

Lamp		Bulb Type	Voltage Power
Headlamp	Low Beam (halogen)	H7	12V 55W
	Low Beam (xenon)	D3S	12V 35W
	High Beam	H7	12V 55W
	Front Direction Indicator Lamp	WY21W	12V 21W
	Front Width Lamp	W5W	12V 5W
Tail Lamp	Rear Width Lamp	W5W	12V 5W
	Brake Lamp/Rear Width Lamp	W21/5W	12V 21W/5W
	Rear Direction Indicator Lamp	WY21W	12V 21W
Rear Combination Lamp	Rear Width Lamp	W5W	12V 5W
	Reverse Lamp	W16W	12V 16W
Front Fog Lamp		H8	12V 35W
Rear Fog Lamp		W21W	12V 21W
Licence Plate Light		W5W	12V 5W
Side Direction Indicator Lamp		WY5W	12V 5W
High-mounted Stop Lamp		W5W	12V 5W

www.cargeek.ir

www.cargeek.ir

Operation

Overview

Exterior Lighting Control and Detection

The BCM controls the following lamps:

- High Beam Headlamp
- Front Fog Lamp (if fitted)
- Side Direction Indicator Lamp

The BCM detects and controls the following lamps:

- Direction Indicator Lamp/Hazard Warning Lamp (bulb detection)
- Brake Lamp (including high-mounted stop lamp)
- Low Beam Headlamp (bulb detection)
- Rear Fog Lamp
- Width Lamp (front/rear fog lamp and license plate lamp)
- Reverse Lamp
- Daytime Running Lamp (if fitted)

Auto Lamp Control (if fitted)

When the master light switch is in "AUTO" position (if fitted), the light sensor of the solar/light sensor (if fitted) turns on/off the headlamp automatically according to the outside light (visible light). When the master light switch is in other positions, the priority of the switch command is higher than that of the request signal from the solar/light sensor (if fitted).

Brake Lamp

When the brake pedal is not used, the tang of the brake pedal leans against the sensor end and is in idle state. When the brake pedal is depressed, the tang moves away from the sensor, which causes change of the sensor output voltage. For some models, the brake lamp switch has two pedal status inputs, one signal is sent to the **BCM**, the other is sent to the **ECM**; some models may only transmit the signal directly to the **ECM** by the hard wire.

Emergency Brake Lamp Control

The brake lamp will flash under the following conditions:

1. The brake pedal inputs activation signal.
2. The **ABS** or **SCS** sends the corresponding activation signal.

When the emergency brake is activated, if the hazard warning lamp is working, the emergency brake lamp will not flash.

If the activated hazard warning lamp causes failure of the emergency brake lamp, the emergency brake lamp will not flash again after the hazard warning lamp is cancelled unless the above conditions are met.

The emergency brake lamp can be activated only when the vehicle speed exceeds 50km/h. After the emergency brake lamp is activated, when the activation signal of the **ABS**/hard brake disappears (more than 2s), the emergency brake lamp will be disabled. After the emergency brake lamp is activated, when the activation signal of the **ABS**/hard brake disappears and the vehicle speed is less than 2km/h, the emergency brake lamp will be disabled after a 5s' illumination.

When the vehicle speed is less than 10km/h for 1s, if the emergency brake lamp is disabled, the hazard warning lamp will be activated automatically; when the vehicle speed remains above 10km/h, if the emergency brake lamp stops flashing, the hazard warning lamp will not be activated even if the vehicle speed is already below 10km/h. When the hazard warning lamp is activated, the hazard warning lamp cannot be enabled by pressing the lamp switch, keeping the vehicle speed above 20km/h for 5s or restarting the vehicle.

When the **SCS** cannot receive any activation signal for the hard brake, the **BCM** can illuminate the emergency brake lamp as per the acceleration signal of the **SCS**.

Brake Lamp Activation Request from Other Systems

When the **BCM** receives the brake lamp activation request from the **EPB** and **SCS**, the **BCM** will illuminate the brake lamp according to the valid signal.

Brake Lamp Illumination Control (if fitted)

When the **BCM** detects that the daytime mode or width lamp is disabled, the **BCM** will drive the brake lamp to output 100% **PWM**. When the **BCM** detects that the night mode or width lamp is enabled, the **BCM** will drive the brake lamp to output 80% **PWM**.

Direction Indicator Lamp

When the ignition switch is in the 1st gear and the direction indicator lamp switch is enabled, the **BCM** flashes the corresponding direction indicator lamp by identifying the switch status of the direction indicator lamp. Then the direction indicator lamp flashes and provides the current status of the direction indicator lamp for the driver by acoustic warning.

Front Fog Lamp (if fitted)

According to the switch signal of the front fog lamp on the master light switch, the **BCM** closes and disconnects the relay and allows the front fog lamp to work. It also sends the ON/OFF status of the front fog lamp to the IPK, the main zone of the information center on the IPK displays "Front Fog Lamp ON" (if fitted), and this information will disappear after few seconds. When the width lamp is activated, the front fog lamp can be enabled by pressing the front fog lamp switch. In order to provide maximum current for the starter motor, the front

www.cargeek.ir

www.cargeek.ir

fog lamp will be disabled at the time of engine start, and it will resume later.

Rear Fog Lamp

When the ignition switch is in the 2nd gear, the low beam headlamp or front fog lamp is enabled, activation of the rear fog lamp switch can illuminate the rear fog lamp. The **BCM** sends the ON/OFF status of the rear fog lamp to the IPK by receiving the activation signal of the rear fog lamp. The main zone of the information center on the IPK shows "Rear Fog Lamp ON" (if fitted), and this information will disappear after few seconds. When the rear fog lamp switch, low beam headlamp or front fog lamp switch is disabled, the rear fog lamp is cancelled. If the rear fog lamp is already activated at the time of engine start, it will remain ON.

Hazard Warning Lamp

The hazard warning lamp is comprised of the front/rear direction indicator lamp and side direction indicator lamp.

The hazard warning lamp switch is marked with a triangle, which is a touch switch. When the hazard warning lamp is activated, the triangle mark on the switch will flash. When the width lamp or headlamp is enabled, the triangle mark dims, but it will still flash. The hazard warning lamp can be activated manually regardless of current position of the ignition switch.

Operation Priority of Direction Indicator Lamp and Hazard Warning Lamp

If the direction indicator lamp switch is enabled when the hazard warning lamp is working, the direction indicator lamp will cancel the hazard warning lamp. Then, the hazard warning lamp will still flash after the direction indicator lamp or ignition switch is disabled.

If the hazard warning lamp switch is enabled when the direction indicator lamp is working, the hazard warning lamp will cancel the direction indicator lamp. The direction indicator lamp will resume after the hazard warning lamp is disabled.

The hazard warming lamp can be activated automatically under the following situations:

- In case of impact, when the **BCM** detects an impact signal, it will activate the hazard warning lamp automatically. Accidental activation of the hazard warning lamp during impact can be cancelled by pressing the hazard warning lamp switch for 5s.
- When the security system is activated and the engine is running, once a door is opened, the hazard warning lamp will flash for 15s, after the door is closed, the warning will be cancelled immediately.

Low Beam Headlamp

When the master light switch is turned to the low beam, the **BCM** closes the low beam relay and illuminates the low beam headlamp.

High Beam Headlamp

When the ignition switch is in position 2, the **BCM** closes the low beam relay and illuminates the low beam headlamp by identifying the status of the lamp lever switch. When the high beam is enabled, the blue indicator lamp on the IPK illuminates.

Width Lamp

When turning the master light switch to the width lamp or low beam headlamp, the width lamp illuminates.

The master light switch is in the "**AUTO**" position (if any), when the **BCM** receives the "Outside Illumination Intensity Low" signal from the solar/light sensor (if fitted), it will illuminate the width lamp automatically. When the **BCM** receives the identified status signal of the TPMS (if fitted), the **BCM** will flash the width lamp. When the ignition switch is off, and the master light switch is in the width lamp, the width lamp will be disabled within 20min.

Reverse Lamp

When the ignition switch is in the 2nd gear, and the **ECM** (MT) or **TCM** (AT) detects that the shift lever is in the R gear, it will send reverse signal to the **BCM** through the **CAN** bus. Once the **BCM** considers the signal is valid, it illuminates the reverse lamp immediately. When the **BCM** detects that the signal is invalid (the ignition switch is not in the 2nd gear or the shift lever is not in the R gear), it turns off the reverse lamp.

When the ignition switch is in the 2nd gear, if the **BCM** receives a fault signal of the R gear switch, the reverse lamp will remain on.

Note: *For vehicles with automatic transmission, to avoid shifting to R gear and illuminating the reverse lamp accidentally, when the* **BCM** *detects that the shift lever is in R gear, it will hold it there for more than 1s before illuminating the reverse lamp.*

Additional Function

Battery Save Mode (if fitted)

If the master light switch remains in the width lamp after the ignition switch is off, the battery power-saving system will turn off the exterior lamp automatically after a while so as to avoid unnecessary battery discharge.

Follow Me Home (if fitted)

When the driver turns off the ignition switch and is about to leave the vehicle, the Follow Me Home function can control the timed illumination of the low beam headlamp and/or rear

www.cargeek.ir

www.cargeek.ir

fog lamp (optional) to illuminate the area around the vehicle. The duration of the illumination (0-300s) can be set according to individual needs (increase at an increment of 30s). If the door is opened after the Follow Me Home timer is working, the timer will repeat the operation. The following lamps can provide Follow Me Home function: low beam headlamp, front fog lamp (if fitted), high beam headlamp, daytime running lamp (if fitted), rear fog lamp, reverse lamp and brake lamp.

The Follow Me Home function can be set by auto mode and manual mode. The **BCM** can identify the status of the Follow Me Home function according to the activation signal of this function.

- Auto mode: when the master light switch is in "**AUTO**" position (if fitted), and the outside illumination is weak, the vehicle will enter into the Follow Me Home mode automatically after the vehicle power is off.
- Manual mode: after the ignition switch is off, turn the lamp lever switch to the high beam, the system enters into the Follow Me Home mode.

With the Follow Me Home activated, pull the high beam headlamp lever or shift the ignition switch to disable the Follow Me Home. With the Follow Me Home activated, the main zone of the information center on the IPK will show "Follow Me Home Enabled ##.# min".

When enabled ignition switch, alternator failure or battery overdischarge is detected, the Follow Me Home cannot work properly.

Vehicle Locating Function (if fitted)

This function helps the driver to quickly locate his car with the body lamp during night driving. This function can be activated or cancelled by the combination switch menu on the entertainment and navigation interface, and the duration of the illumination (0-300s) can also be set according to individual needs (increase at an increment of 30s). Lamps that can provide vehicle locating function include low beam, rear fog lamp and reverse lamp.

If the solar/light sensor (if fitted) receives the activation signal of the outside auto lamp or vehicle locating request from the TBOX (if fitted) through the UNLOCK request, the vehicle locating mode will be enabled.

The vehicle locating function can be disabled by shifting the ignition switch/master light switch, overdischarging the battery or receiving a valid LOCK request from the remote control.

If the illumination duration is set to 0s, the vehicle locating function will ignore the valid signal from the the solar/light sensor (if fitted).

The vehicle locating function cannot be cancelled by opening the door.

Park Lamp (if fitted)

The **BCM** can identify the ON/OFF status of the park lamp by the status signal of the width lamp. When the ignition switch is off, and the direction indicator lamp switch is on, the corresponding width lamp will illuminate. When the system power mode is enabled, and the direction signal switch is disabled or the width lamp is enabled by manual manner, the park lamp will be disabled.

License Plate Lamp (if fitted)

With the ignition switch OFF, the license plate lamp can be activated (appr. 30s) by pressing the tail gate UNLOCK button on the remote key. If press the UNLOCK button again within 30s, the time will be reset, the maximum duration will be within 5 min.

Daytime Running Lamp (if fitted)

The **BCM** controls the daytime running lamp (if fitted) through 2 different high side driver circuits. When the direction indicator lamp flashes, the corresponding daytime running lamp (if fitted) is disabled; when the direction indicator lamp is disabled, the daytime running lamp illuminates. The **BCM** can configure the front fog lamp and use it as the daytime running lamp (if fitted).

Lamp of Security System

Lamp of the security system consists of the low beam headlamp and high beam headlamp.

If the **BCM** receives a valid request signal of the outside lock, and the vehicle is in the security system, locked or completely in the anti-theft state, it controls the direction indicator lamp to give 3 flashes.

If the anti-theft function of the security system is disabled, the direction indicator lamp gives 1 flash.

If the vehicle is not fully locked (engine cover, tail gate and door are open), the direction indicator lamp will not flash.

Auto Lamp Control (if fitted)

When the master light switch is in "**AUTO**" position (if fitted) for night driving, the following lamps illuminate:

- When the ignition switch is off, the low beam headlamp does not illuminate.
- When the ignition switch is in the 1st gear, the park lamp illuminates.
- When the ignition switch is in the 2nd gear, the low beam headlamp illuminates.
- When the ignition switch is in the 3rd gear, the low beam headlamp stops and the park lamp illuminates.

www.cargeek.ir

Operation of Emergency Mode

The **BCM** possesses a completely independent microprocessor. During data processing or peripheral equipment failure and low battery, the **BCM** can ensure normal operation of the vehicle security system.

The following functions can be used in emergency mode:

- When the ignition switch is in the 2nd gear, the low beam headlamp and width lamp illuminate no matter whether the master light switch is enabled.
- With the ignition switch in the 2nd gear and the brake pedal depressed, the brake lamp will be enabled.

After reset, the emergency mode will be activated for 2.5s, this allows the low beam headlamp to illuminate when the ignition switch is in the 2nd gear. However, the direction indicator lamp, high beam headlamp, front fog lamp, rear fog lamp and **CAN** bus or **LIN** line will not work in emergency mode.

DHL

The DHL system is an intelligent system which can adjust headlamp levelling automatically. It controls headlamp levelling based on the vehicle speed and input from the high speed sensor, etc. The DHL system can provide an optimum road illumination for the driver.

www.cargeek.ir

www.cargeek.ir

www.cargeek.ir

Service Procedures

Tail Lamp Bulb

Remove

1. Remove the tail lamp assembly.

☞ **Tail Lamp Assembly Remove**

2. Remove the holder (1) of the rear direction indicator lamp.
3. Remove the bulb of the rear direction indicator lamp from the lamp holder and discard the bulb.
4. Remove the holder (2) of the tail lamp.
5. Remove the bulb of the tail lamp from the lamp holder and discard the bulb.
6. Remove the holder (3) of the brake lamp/tail lamp.
7. Remove the bulb of the brake lamp/tail lamp from the lamp holder and discard the bulb.

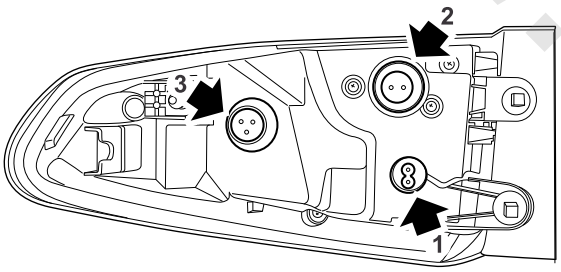

S6610004

Refit

1. Fit the new brake lamp / tail lamp bulb to the holder, and then fit the holder to the lamp assembly.
2. Fit the new tail lamp bulb to the holder, and then fit the holder to the lamp assembly.
3. Fit the new rear direction indicator bulb to the holder, and then fit the holder to the lamp assembly.
4. Refit the tail lamp assembly.

☞ **Tail Lamp Assembly Refit**

Rear License Plate Lamp Bulb

Remove

1. Disconnect the battery negative.
2. Release the trunk lid lock catch.
3. Remove the rear cover bottom moulding.

☞ **Rear Cover Bottom Moulding Remove**

4. Remove the rear license plate lamp light-distributing mirror.
5. Remove the rear license plate lamp bulb from the lamp holder and discard.

Refit

1. Fit the new rear license plate lamp bulb to the holder, and then fit the holder to the lamp assembly.
2. Fit the rear license plate lamp light-distributing mirror.
3. Fit the rear cover bottom moulding.

☞ **Refit of Rear Cover Bottom Moulding**

4. Close the luggage compartment lid.
5. Connect the battery negative.

www.cargeek.ir

Rear Fog Lamp Bulb

Remove

1. Disconnect the battery negative.
2. Remove the rear bumper.

Rear Bumper Assembly Remove

3. Rotate the bulb holder counterclockwise to remove.

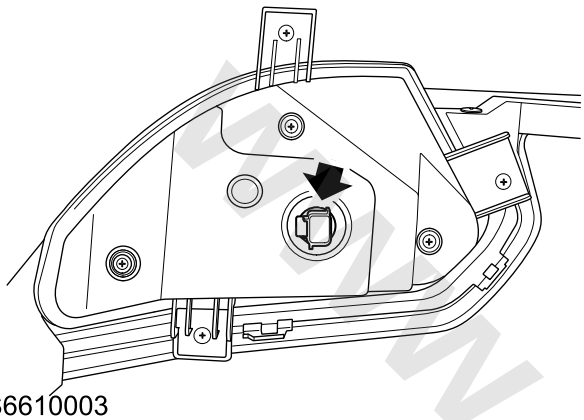

S6610003

4. Pull the bulb out of the bulb holder.

Refit

1. Fit the bulb to the holder.
2. Rotate the bulb holder clockwise to fit it to the rear fog lamp assembly.
3. Fit the rear bumper.

Rear Bumper Assembly Refit

4. Connect the battery negative.

Rear Combination Lamp Bulb

Remove

1. Disconnect the battery negative.
2. Remove the nut cap from the interior trim panel of the tail gate.
3. Remove 3 nuts fixing the rear combination lamp to the tail gate.
4. Remove the holder (1) of the reverse lamp.
5. Remove the bulb of the reverse lamp from the lamp holder and discard the bulb.
6. Remove the holder (2) of the tail lamp.
7. Remove the bulb of the tail lamp from the lamp holder and discard the bulb.

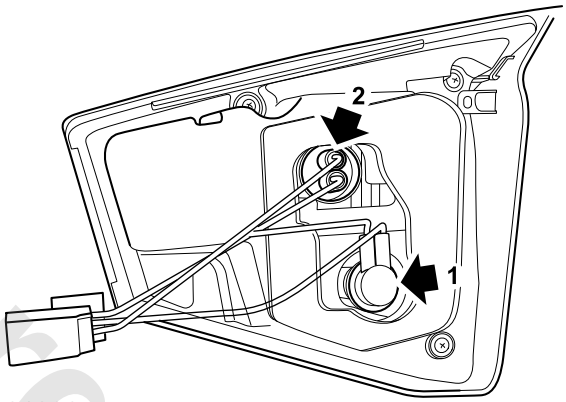

S6610005

Refit

1. Fit the new reverse lamp bulb to the holder, and then fit the holder to the lamp assembly.
2. Fit the new tail lamp bulb to the holder, and then fit the holder to the lamp assembly.
3. Secure the rear combination lamp to the tail gate.
4. Fit the nut block cover to the tail gate interior trim panel.
5. Connect the battery negative.

www.cargeek.ir

www.cargeek.ir

Rear Fog Lamp Assembly

Remove

1. Disconnect the battery negative cable.
2. Remove the rear bumper.

Rear Bumper Assembly Remove

3. Disconnect the connector from the rear fog lamp assembly.
4. Remove 3 screws fixing the rear fog lamp assembly to the rear bumper.

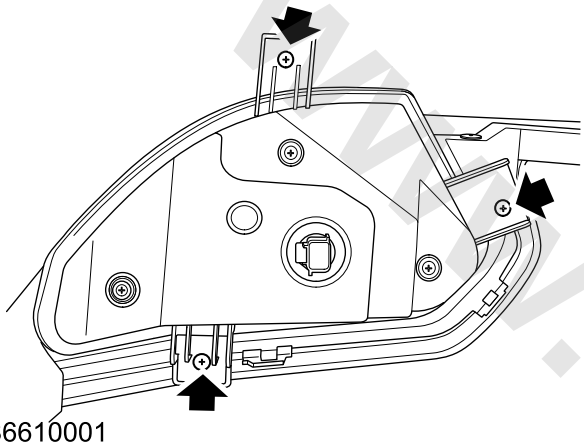

S6610001

5. Remove the rear fog lamp assembly.

Refit

1. Align the pin hole bushing on the rear fog lamp with the pin on the bumper, meanwhile align other screw holes.
2. Fit the screws fixing the rear fog lamp assembly to the rear bumper and tighten to **1.1–1.3Nm**.
3. Connect the rear fog lamp connector.
4. Refit the rear bumper.

Rear Bumper Assembly Refit

5. Connect the battery negative cable.

Daytime Running Lamp Assembly

Remove

1. Disconnect the battery negative cable.
2. Remove the front bumper.

Front Bumper Assembly Remove

3. Disconnect the connector from the daytime running lamp assembly.
4. Remove 3 screws fixing the daytime running lamp assembly to the front bumper.

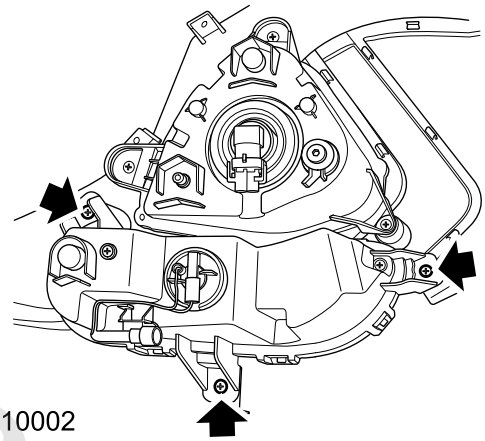

S6510002

5. Remove the daytime running lamp assembly.

Refit

1. Fit the daytime running lamp assembly on the front bumper.
2. Fit the screws fixing the daytime running lamp assembly to the front bumper and tighten to **3–5Nm**.
3. Connect the connector to the daytime running lamp assembly.
4. Refit the front bumper assembly.

Front Bumper Assembly Refit

5. Connect the battery negative cable.

www.cargeek.ir

www.cargeek.ir

Low Beam Bulb

Remove

1. Disconnect the battery negative.
2. Remove 3 bolts connecting the upper headlamp mounting panel and the body and 3 bolts connecting the upper radiator beam, and remove the upper headlamp mounting panel.

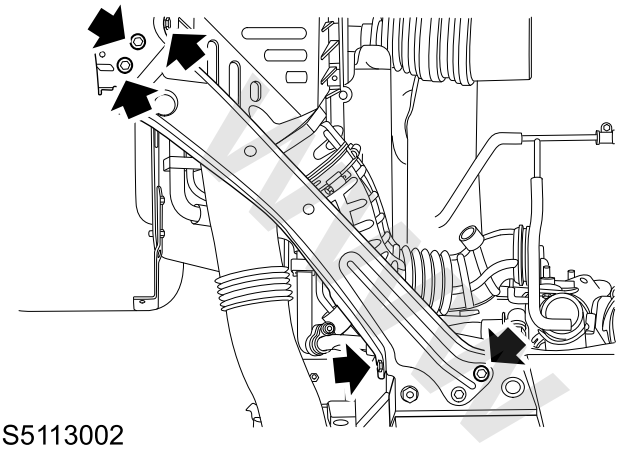

S5113002

3. Remove the low beam bulb cover from the headlamp.
4. Release the circlip securing the bulb, and remove and discard the bulb.

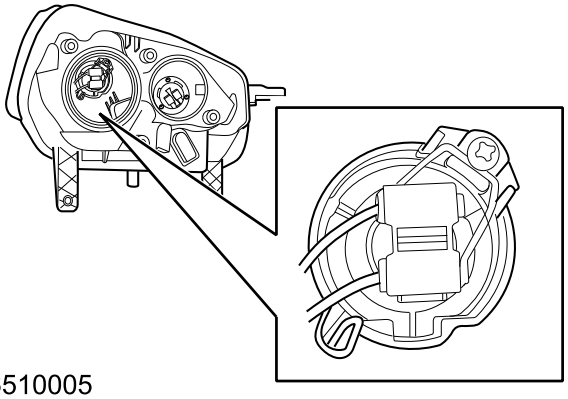

S6510005

Refit

1. Fit the bulb to the bulb holder.
2. Fit the bulb holder with circlip to the headlamp assembly.
3. Fit the low beam bulb cover.
4. Fit the headlamp upper mounting plate, and tighten 3 bolts connecting the upper mounting plate with the vehicle body and 3 bolts connecting it with the upper radiator beam.
5. Connect the battery negative.

Front Fog Lamp Bulb

Remove

1. Disconnect the battery negative.
2. Remove the bottom deflector.

Bottom Deflector Remove

3. Rotate the bulb holder counterclockwise to remove.

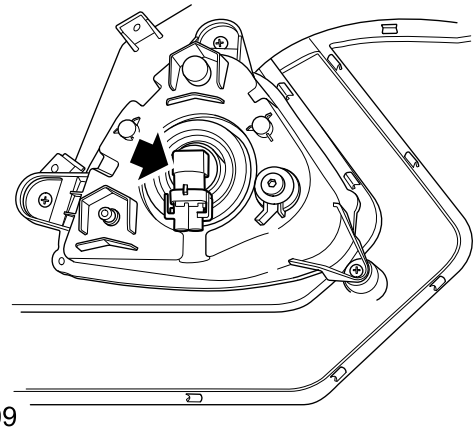

S6510009

4. Pull the bulb out of the bulb holder.

Refit

1. Fit the bulb to the holder.
2. Rotate the bulb holder clockwise to fit it to the front fog lamp assembly.
3. Refit the bottom deflector.

Bottom Deflector Refit

4. Connect the battery negative.

www.cargeek.ir

www.cargeek.ir

Front Fog Lamp Assembly

Remove

1. Disconnect the battery negative.
2. Remove the front bumper.

Front Bumper Assembly Remove

3. Disconnect the connector from the front fog lamp assembly.
4. Remove 3 bolts securing the front fog lamp assembly to the front bumper.

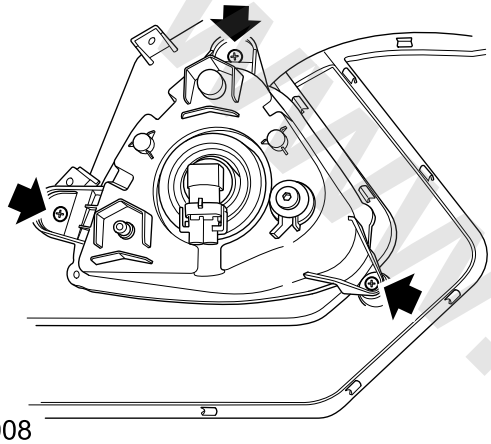

S6510008

5. Remove the headlamp assembly.

Refit

1. Refit the front fog lamp assembly onto the front bumper.
2. Fit the screws fixing the front fog lamp assembly to front bumper and tighten to **3–5Nm**.
3. Connect the connector to the front fog lamp assembly.
4. Refit the front bumper assembly.

Refit of Front Bumper Assembly

5. Connect the battery negative.

Headlamp Lighting Calibration (Low Beam and High Beam)

Check

1. Unload the cargo in the vehicle and keep the vehicle empty.
2. Turn on the low beam and allow the beam to fall on the screen 10m away from it.
3. Adjust the headlamp, and the height of the cut-off line or central height of the low beam shall be 0.7H-0.9H (H = 937mm).
4. Turn on the high beam and allow the beam to fall on the screen 10m away from it.
5. Adjust the headlamp, ensure the central height of the high beam on the screen is 0.85H-0.95H (H = 913mm), it shall not be lower than the cut-off line or center of the low beam.
6. For requirements on beam illumination location, please refer to GB 7258-2012 (Safety Specifications for Motor Vehicles Operating on Roads).

Adjustment

Warning: The light deflection caused by the bracket deformation or wrong lamp fixing position can't be corrected by adjusting and the excessive adjustment will break the lamp.

1. Low beam levelling can be achieved by turning the screw (1), and the torque is **0.1–0.5Nm**.
2. Low beam vertical adjustment can be achieved by turning the screw (3), and the torque is **0.1–0.5Nm**.
3. High beam vertical adjustment can be achieved by turning the screw (2), and the torque is **0.1–0.5Nm**.
4. High beam levelling can be achieved by turning the screw (4), and the torque is **0.1–0.5Nm**.

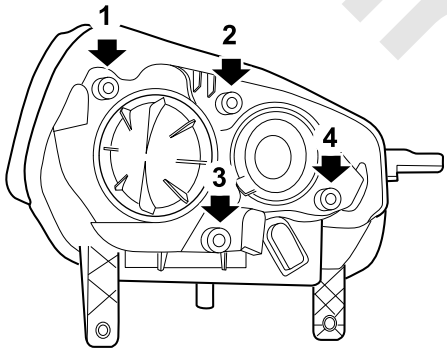

S6510012

www.cargeek.ir

Headlamp Assembly

Remove

1. Disconnect the battery negative.
2. Remove the front bumper.

☞**Front Bumper Assembly Remove**

3. Remove 4 bolts securing the headlamp to the body.

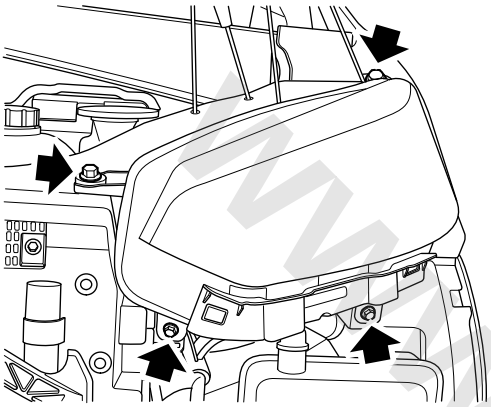

S6510001

4. Disconnect the connector from the headlamp assembly.
5. Remove the headlamp assembly.

Refit

1. Connect the connector to the headlamp.
2. Fit the headlamp assembly.
3. Align the headlamp assembly with the mounting point, fit the bolt and tighten to **3–5Nm**.
4. Fit the front bumper assembly.

☞**Front Bumper Assembly Refit**

5. Connect the battery negative.
6. Check if the headlamp is aligned.

☞**Headlamp Lighting Calibration (Low Beam and High Beam)**

Front Direction Indicator Bulb

Remove

1. Disconnect the battery negative.
2. Remove the front bumper.

☞**Front Bumper Assembly Remove**

3. Counterclockwise turn the bulb cover of the front direction indicator lamp to an appropriate position, and remove the bulb cover.
4. Turn the holder of the front direction indicator lamp counterclockwise to remove the lamp holder.

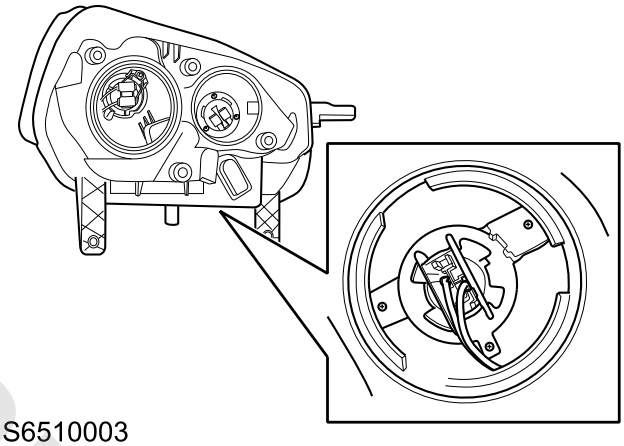

S6510003

5. Remove the bulb from the bulb holder.

Refit

1. Fit the bulb to the bulb holder.
2. Fit the bulb holder to the headlamp assembly.
3. Fit the front direction indicator bulb cover.
4. Refit the front bumper assembly.

☞**Front Bumper Assembly Refit**

5. Connect the battery negative.

www.cargeek.ir

www.cargeek.ir

Rectifier

Remove

1. Disconnect the battery negative.
2. Remove the headlamp assembly.

Headlamp Assembly Remove

3. Turn over the headlamp assembly, and remove 3 screws securing the rectifier to the headlamp assembly.

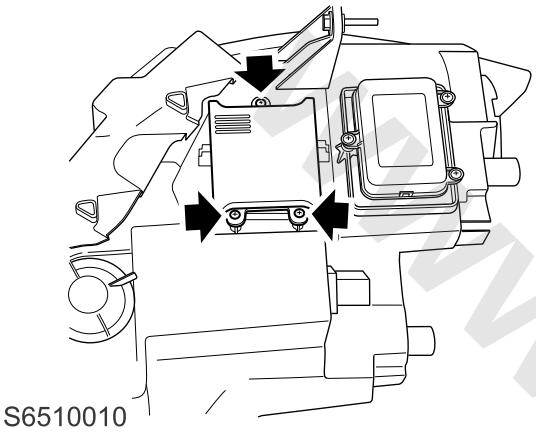

4. Disconnect the high pressure shielded wire and remove the rectifier.

Refit

1. Connect the high pressure shielded wire to rectifier.
2. Secure the rectifier to the headlamp assembly, fit 3 screws and tighten to **5–7Nm**.
3. Refit the headlamp assembly.

Headlamp Assembly Refit

4. Connect the battery negative.

High Mounted Stop Lamp Assembly

Remove

1. Disconnect the battery negative.
2. Open the tail gate, and pry up 2 screw caps of tail gate upper interior trim panel.
3. Remove 2 screws securing the tail gate upper interior trim panel to the tail gate, and remove the tail gate upper interior trim panel.
4. Disconnect the connector from high mounted stop lamp.
5. Remove 3 nuts securing the high mounted stop lamp to the tail gate upper interior trim panel, and take down the high mounted stop lamp.

Refit

1. Fit the high mounted stop lamp to the tail gate upper interior trim panel and secure with nuts.
2. Connect the connector of high mounted stop lamp.
3. Fit the upper interior trim panel of the tail gate.
4. Fit 2 screws securing the tail gate upper interior trim panel and tighten to **2–3Nm**, and fit 2 screw caps of the tail gate upper interior trim panel.
5. Connect the battery negative.

www.cargeek.ir

www.cargeek.ir

Tail Lamp LED Bulb

Remove

1. Remove the tail lamp assembly.

Tail Lamp Assembly Remove

2. Remove the rear direction indicator holder.

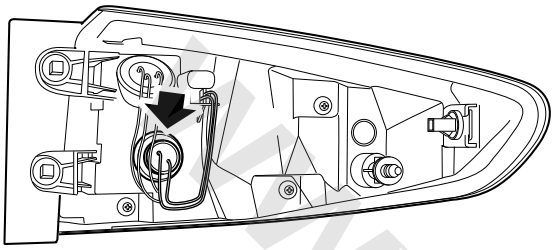

S6610007

3. Remove the rear direction indicator bulb from the holder and discard.

Refit

1. Fit the new rear direction indicator bulb to the holder, and then fit the holder to the lamp assembly.
2. Refit the tail lamp assembly.

Tail Lamp Assembly Refit

LED Rear Combination Lamp Bulb

Remove

1. Disconnect the battery negative cable.
2. Remove the nut cap from the tail gate interior trim panel.
3. Remove 3 nuts fixing the rear combination lamp to the tail gate.
4. Remove the reverse lamp holder and disconnect the connector above the lamp holder.

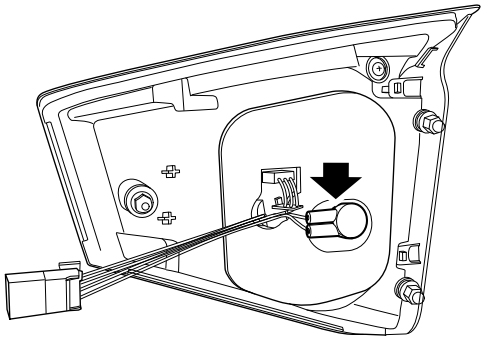

S6610006

5. Remove and discard the reverse lamp bulb from the lamp holder.

Refit

1. Refit the new reverse lamp bulb into the bulb holder, and then refit the bulb holder into the lamp assembly.
2. Connect the connector.
3. Fix the rear combination lamp to the tail gate with nuts.
4. Fit the nut caps on the tail gate interior trim panel.
5. Connect the battery negative cable.

www.cargeek.ir

www.cargeek.ir

Rear Combination Lamp Assembly

Remove

1. Disconnect the battery negative cable.
2. Remove the tail gate interior trim panel.

☞ **Tail Gate Interior Trim Panel Remove**

3. Remove 3 nuts fixing the rear combination lamp assembly to the tail gate.
4. Remove the clips fixing the rear combination lamp harness to the tail gate, disconnect the connector and remove the rear combination lamp assembly.

Refit

1. Refit the rear combination lamp assembly on the tail gate with nuts and tighten to **2.7–3.3Nm**.
2. Connect the connector and fix the rear combination lamp harness to the tail gate with clips.
3. Refit the tail gate interior trim panel.

☞ **Tail Gate Interior Trim Panel Refit**

4. Connect the battery negative cable.

Tail Lamp Assembly

Remove

1. Disconnect the battery negative.
2. Release the trunk lid lock catch.
3. Remove 2 plugs for securing the tail lamp assembly screws.

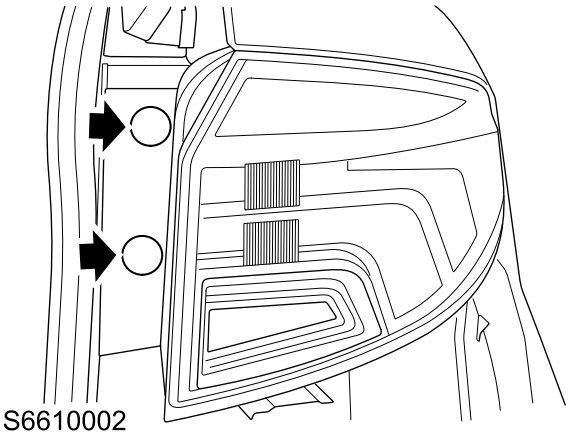

4. Remove 2 bolts securing the tail lamp assembly to the body.
5. Release the tail lamp assembly and disconnect the connector.
6. Remove the tail lamp assembly and discard 2 bolt sealing washers.

Refit

1. Fit 2 new sealing washers to tail lamp assembly.
2. Connect the connector of the tail lamp and fit the tail lamp assembly.
3. Fix the tail lamp assembly to **2.7–3.3Nm** with nuts.
4. Fit the plugs of 2 mounting holes.
5. Close the luggage compartment lid.
6. Connect the battery negative.

www.cargeek.ir

www.cargeek.ir

High Beam Bulb

Remove

1. Disconnect the battery negative.
2. Remove 3 bolts connecting the upper headlamp mounting panel and the body and 3 bolts connecting the upper radiator beam, and remove the upper headlamp mounting panel.
3. Remove the high beam bulb cover.
4. Turn the holder of the high beam counterclockwise to remove the lamp holder.

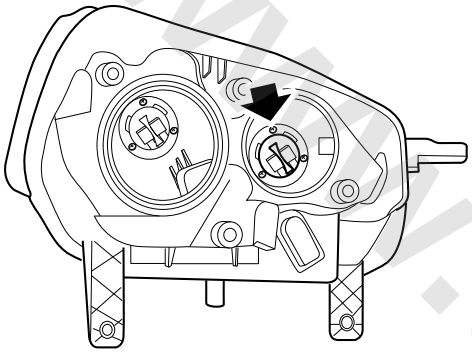

S6510008

5. Remove the bulb from the bulb holder.

Refit

1. Fit the bulb to the bulb holder.
2. Fit the bulb holder to the headlamp assembly.
3. Fit the high beam bulb cover.
4. Fit the headlamp upper mounting plate, and tighten 3 bolts connecting the upper mounting plate with the vehicle body and 3 bolts connecting it with the upper radiator beam.
5. Connect the battery negative.

Headlamp Xenon Bulb

Remove

1. Disconnect the battery negative.
2. Remove 3 bolts connecting the upper headlamp mounting panel and the body and 3 bolts connecting the upper radiator beam, and remove the upper headlamp mounting panel.
3. Turn the bulb cover counterclockwise to remove the xenon bulb cover.
4. Turn the bulb counterclockwise to remove the xenon bulb.

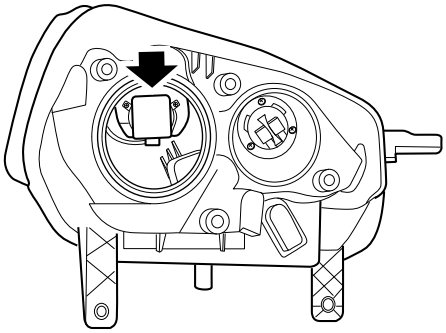

S6510004

5. Disconnect the connector of the bulb.

Refit

1. Connect the connector on the bulb.
2. Fit the xenon lamp bulb.
3. Fit the xenon lamp bulb cover.
4. Fit the headlamp upper mounting plate, and tighten 3 bolts connecting the upper mounting plate with the vehicle body and 3 bolts connecting it with the upper radiator beam.
5. Connect the battery negative cable.

www.cargeek.ir

www.cargeek.ir

Dynamic Headlamp Leveling Control Module

Remove

1. Disconnect the battery negative.
2. Remove the PEPS module.

☞**PEPS Module Remove**

3. Disconnect the connector of the DHL module.
4. Remove 2 bolts fixing the DHL module to the body.

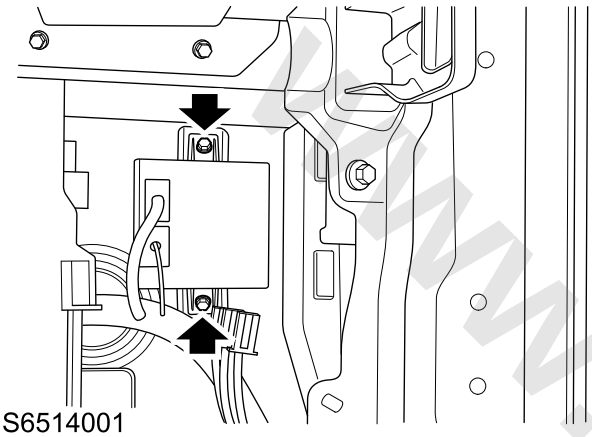

S6514001

5. Remove the DHL module from the body.

Refit

1. Fix the DHL module to the body, fit 2 bolts and tighten to **6–8Nm**.
2. Connect the connector of the DHL module.
3. Connect the battery negative.
4. Programme and code the DHL module.

☞**Self-learning and Adjustment, Programming and Coding - DHL Module Replacement**

5. After replacement, disconnect the battery negative and fit the PEPS module.

☞**PEPS Refit**

Headlamp Leveling Front Suspension Height Sensor

Remove

1. Disconnect the battery negative.
2. Raise the vehicle on the elevator.
3. Disconnect the connector from the headlamp leveling front suspension height sensor.
4. Remove 4 bolts securing the headlamp leveling front suspension height sensor to right front subframe and right front lower swing arm.

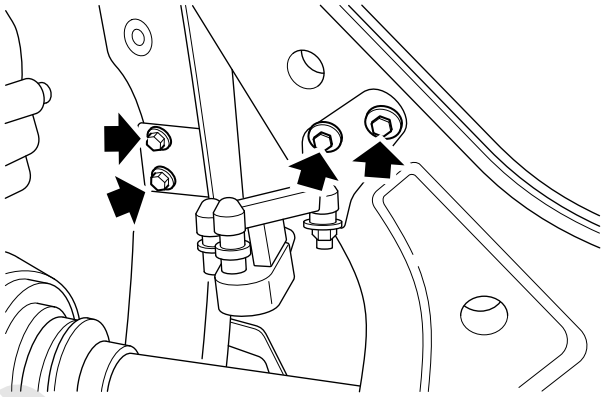

S6563000

5. Remove the headlamp leveling front suspension height sensor.

Refit

1. Fix the DHL front suspension height sensor to the right front subframe and right front lower swing arm, fit 4 bolts and tighten to **7–10Nm**.
2. Connect the connector of the DHL front suspension height sensor.
3. Lift down the vehicle.
4. Connect the battery negative.
5. Perform height sensor null voltage self-learning.

☞**Self-learning and Adjustment, Programming and Coding - Height Sensor Null Voltage Self-learning**

www.cargeek.ir

www.cargeek.ir

Headlamp Leveling Rear Suspension Height Sensor

Remove

1. Disconnect the battery negative.
2. Raise the vehicle on the elevator.
3. Disconnect the electrical connector from the headlamp leveling rear suspension height sensor.
4. Remove 3 bolts securing the headlamp leveling rear suspension height sensor to the body and right rear trailing arm.

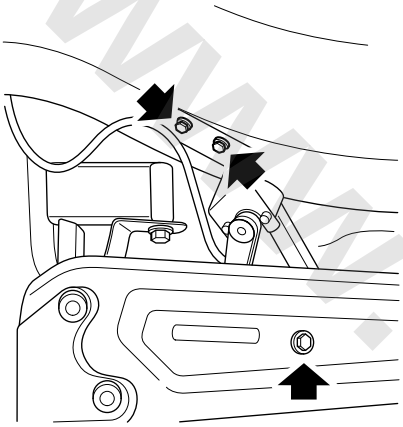

S8523000

5. Remove the headlamp leveling rear suspension height sensor.

Refit

1. Fix the DHL rear suspension height sensor to the body and right rear trailing arm (note the curved surface of the sensor bracket shall fit the trailing arm), fit 3 bolts and tighten to **7–10Nm**.

Caution: In the refit process, please check the rear suspension height sensor control arm, make sure the direction of control arm point to vehicle head (arrow direction indicated on diagram).

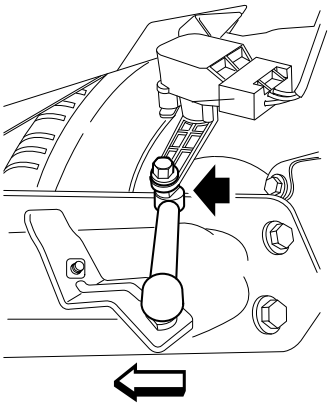

S8523001

2. Connect the electrical connector of the DHL rear suspension height sensor.
3. Lift down the vehicle.
4. Connect the battery negative.
5. Perform height sensor null voltage self-learning.

☞Self-learning and Adjustment, Programming and Coding - Height Sensor Null Voltage Self-learning

www.cargeek.ir

www.cargeek.ir

Left Headlamp Direction Drive Control Module

Remove

1. Remove the left headlamp assembly.

☞ **Headlamp Assembly Remove**

2. Turn over the left headlamp assembly, remove 3 screws fixing the left headlamp direction drive control module to the left headlamp assembly.

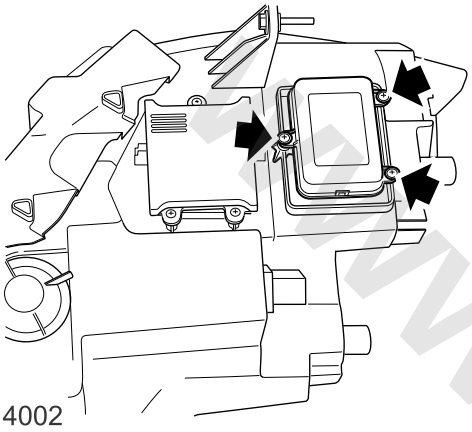

S6514002

3. Disconnect the connector between the control module and headlamp, remove the module assembly.

Refit

1. Connect the connector and direction actuator control module of the left headlamp.
2. Fix the direction actuator control module of the left headlamp to left headlamp assembly, fit 3 screws and tighten to **5–7Nm**.

Caution: Please ensure seal ring fixed correctly when refit AFS slave ECU, if there is water leakage, it may cause headlamp damage.

3. Fit the headlamp assembly.

☞ **Headlamp Assembly Refit**

Right Headlamp Direction Drive Control Module

Remove

1. Remove the right headlamp assembly.

☞ **Headlamp Assembly Remove**

2. Turn over the right headlamp assembly, remove 3 screws fixing the right headlamp direction drive control module to the right headlamp assembly.

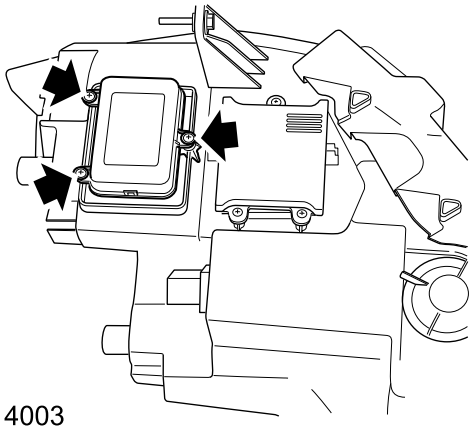

S6514003

3. Disconnect the connector between the control module and headlamp, remove the module assembly.

Refit

1. Connect the connector and direction actuator control module of the right headlamp.
2. Fix the direction actuator control module of the right headlamp to right headlamp assembly, fit 3 screws and tighten to **5–7Nm**.

Caution: Please ensure seal ring fixed correctly when refit AFS slave ECU, if there is water leakage, it may cause headlamp damage.

3. Fit the right headlamp assembly.

☞ **Headlamp Assembly Refit**

www.cargeek.ir

www.cargeek.ir

Door

Specifications

Torque

Description	Value
Bolt - door hinge to door	42–48Nm
Bolt - door striker to body	19–25Nm
Bolt-body- checker	21–29Nm
Screw - exterior handle backplate to door	2–2.5Nm
Bolt - door hinge to body	30–36Nm
Bolt - door lock to door	8–12Nm
Bolt - door striker	15–21Nm
-	
Bolt - door lock	8–12Nm
Bolt-From weather-strip to door inner panel	1–2Nm
Bolt-From glass to regulator	6.5–10Nm

www.cargeek.ir

www.cargeek.ir

www.cargeek.ir

Description and Operation

System Layout

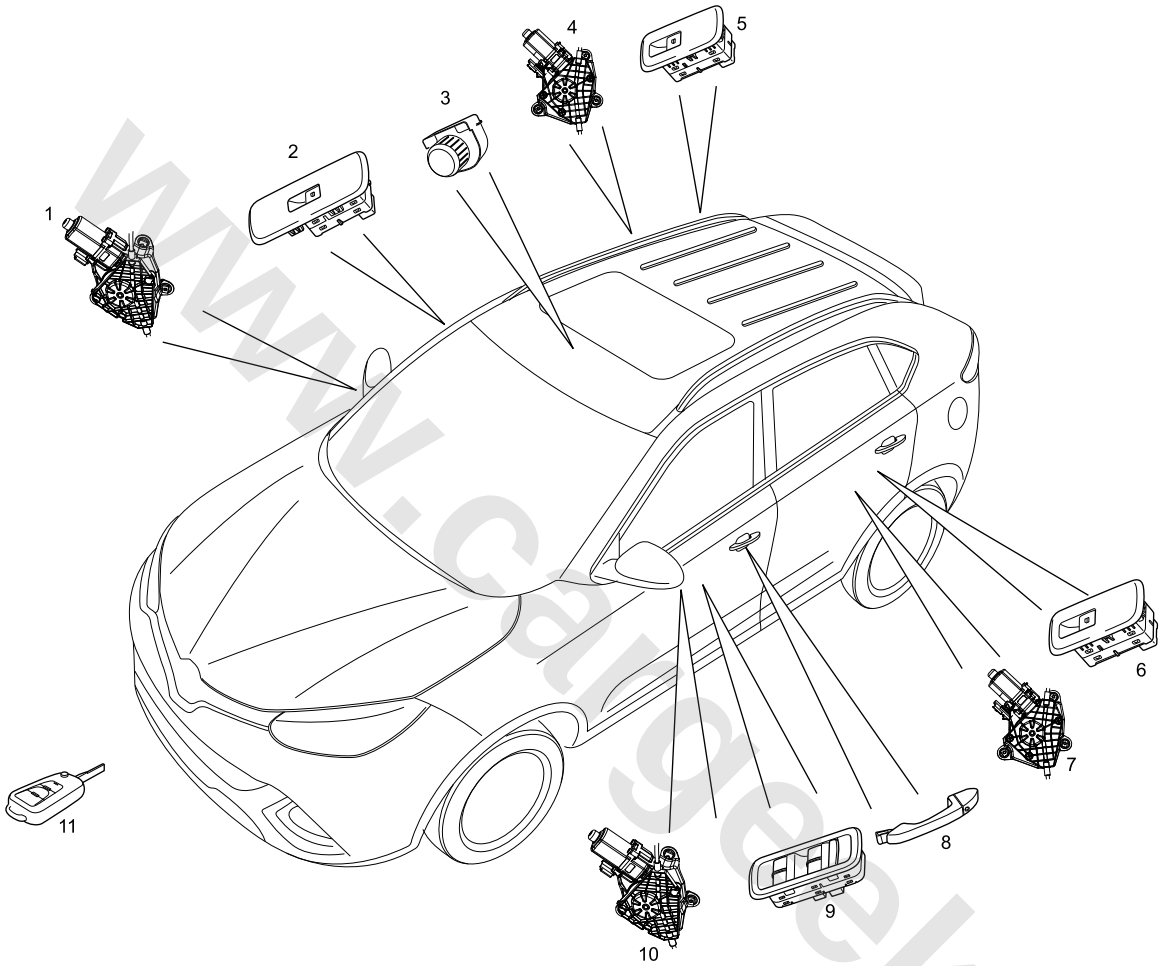

S7210001

1. Window Regulator Motor of Front Passenger
2. Front Passenger Window Switch
3. Sunroof Switch (if any)
4. Window Regulator Motor of Rear Passenger
5. Rear Passenger Window Switch
6. Rear Passenger Window Switch
7. Window Regulator Motor of Rear Passenger
8. Left Front Door Handle
9. Driver Window Switch
10. Driver Window Regulator Motor
11. Remote Key

www.cargeek.ir

www.cargeek.ir

System Control Diagram

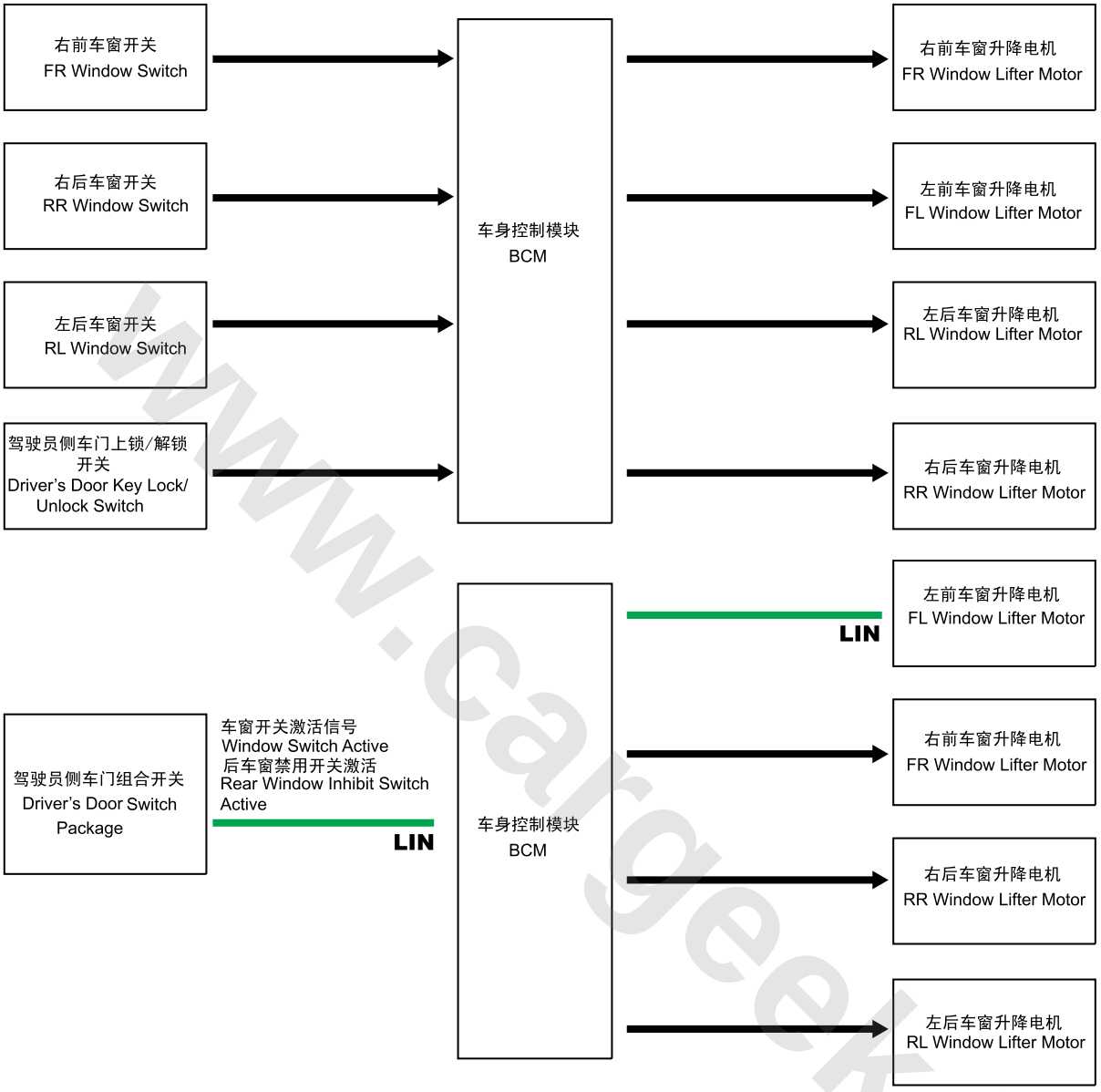

S7211001

A= 硬线 ; B=LIN

www.cargeek.ir

Description

The power window system consists of the following components:

- Driver Window Switch
- Front Passenger Window Switch
- Rear Left Window Switch
- Rear Right Window Switch
- Window Motor
- Sunroof Switch
- **BCM**

Overview

BCM controls the window regulator system:

- Manually ascend/descend the individual window glass.
- Automatically (one-button control) ascend/descend the window glass by using window motor.
- Automatically (one-button control) descend the window glass by using the window regulator system with heat protection (for individual front/rear window glass only).
- Manually ascend/descend all windows.
- Automatically (one-button control) ascend/descend all windows.

The window regulator system transmits information by the **LIN** and low current switch. The LSDs or intelligent motor allows the **BCM** to control the relay:

- The **BCM** receives the hard wire input of the window switch, remote key radiofrequency and the UNLOCK/LOCK signal of the mechanical key from the **DDSP** through the **LIN**. By this way, it controls the relay via the LSD (standard motor).
- The **BCM** sends the request signal to the intelligent motor through the **LIN** and hard wire of the local switch and controls the internal relay.

For power window systems with standard regulator motor, the **BCM** receives the ASCEND/DESCEND signal directly. The motor uses the LSD integrated circuit to control the relay.

For power window systems with intelligent regulator motor, the **BCM** sends operation signal via the **LIN** or hard wire of the local switch.

When locking/unlocking the driver door, and the remote key gives radiofrequency signal or when any impact occurs, the window can be opened/closed simultaneously.

DDSPEnd View and Pin Information of Harness Connector DD004

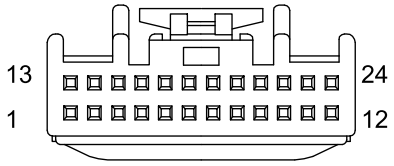

Pin No.	Description
1	KL.30
2	—
3	Ground
4	**LIN**
5	—
6	—
7	—
8	—
9	Left Front Window Up (1.5T, without anti-pinch window)
10	Left Front Window Down (1.5T, without anti-pinch window)
11	Exterior Rearview Mirror Folding (with power rearview mirror)
12	Exterior Rearview Mirror Expansion (with power rearview mirror)
13	—
14	—
15	—
16	—
17	—
18	—
19	—
20	—
21	—
22	—

www.cargeek.ir

Pin No.	Description
23	—
24	—

DDSPEnd View and Pin Information of Harness Connector DD007

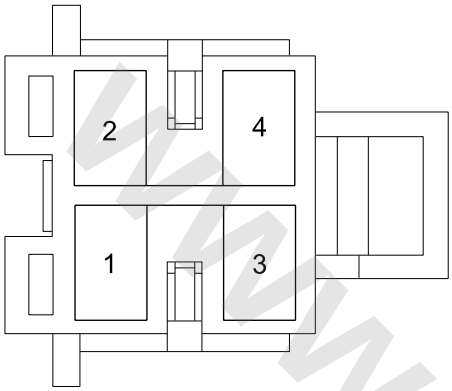

Pin No.	Description
1	Left Front Window Down Output
2	Left Front Window Up Output
3	KL.30
4	Ground

End View and Pin Information of Front Passenger Window Combination Switch Harness Connector PD006

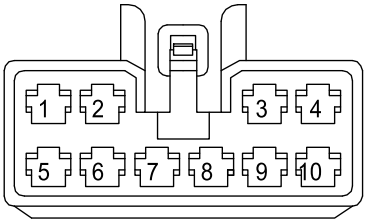

Pin No.	Description
1	KL.30
2	Switch Backlight
3	Window Up
4	Window Up Output
5	Ground
6	Window Down Switch
7	Auto Window (one-button control) Switch
8	Window Down
9	Window Up Switch
10	Window Down Output

End View and Pin Information of Rear Window Switch Harness Connector RD004

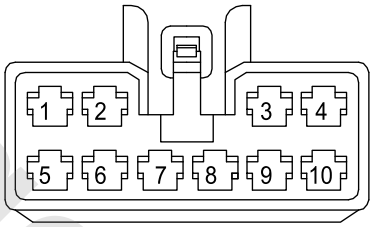

Pin No.	Description
1	KL.30
2	Switch Backlight
3	Window Up
4	Window Up Output
5	Ground
6	Window Down Switch
7	Auto Window (one-button control) Switch
8	Window Down
9	Window Up Switch
10	Window Down Output

www.cargeek.ir

www.cargeek.ir

Operation

Power Window

Control of the window regulator can be achieved by the following operations:

- Use the switch of the **DDSP** to control power window regulator and disable the rear power window.
- Use the front/rear passenger side switch to control the regulator of the corresponding power window.
- Apply the mechanical key to lock/unlock the driver door (if fitted) and hold the operation for several seconds, then all windows will close/open (if fitted).

Window Regulator Switch

DDSP

The **DDSP** sends control command to the motor of the four windows through the **BCM**, including such request signals as open, quick move to memory location to close, manual lock/unlock, one-button lock/unlock, etc. The **DDSP** is fitted with the rear window disable switch, when the disable switch is activated, the rear passenger window switch will be disabled.

Independent Passenger Window Switch

The independent passenger window switch controls the regulator of the corresponding passenger window through the **BCM**. When the rear passenger window is disabled, the switch of the rear passenger window cannot ascend/descend this window.

Window Regulator Control Mode

Manual Mode

Press/lift the window switch to perform manual mode. The window will continue ascending/descending until the switch is released.

One-button Control

The driver window switch is provided with one-button control function.

- One-button unlock: short press and then release the driver window switch of the **DDSP** to descend the window to the bottom.
- One-button lock: short lift and then release the driver window switch of the **DDSP** to ascend the window to the top.

The passenger window switch is provided with one-button control function.

- One-button unlock: short press and then release the passenger window switch to descend the window to the bottom.

Anti-pinch Function

The driver window is provided with anti-pinch function. When the one-button lock function is applied, if there is any object in the ascending channel of the window, the window will stop before the obstacle and return to the bottom automatically.

Heat Protection and Self-learning

Heat Protection

If the power window switch is operated repeatedly within a short time, for the purpose of protecting the window motor, the power window switch will be disabled temporarily. The power window can be operated after a short while.

Driver Power Window Self-learning

If recharge the battery, disconnect the connector, or if the battery cannot work, the information center of the IPK will show the relevant icon and text and request a self-learning for the driver power window. Before self-learning, ensure the battery can provide sufficient power.

Procedures for self-learning:

1. Place the ignition switch in the 1st/2nd gear;
2. Press the power window switch until the window is wide open;
3. Lift the power window switch until the window is fully closed;

After completion of the above procedures, self-learning of the driver power window is finished.

Synchronization of Window Regulator System

If the vehicle is locked by the mechanical key, or if the vehicle is locked by the remote control emitter for more than 2s, all windows will close, including the sunroof.

www.cargeek.ir

www.cargeek.ir

Service Procedures

Front Door Adjustment

Front Door Hinge Adjustment

1. Open the front door.
2. Put the wood block on the jack, and put the jack under the door to support the front door.
3. Unscrew 2 bolts securing the upper and lower door hinges to the door side.

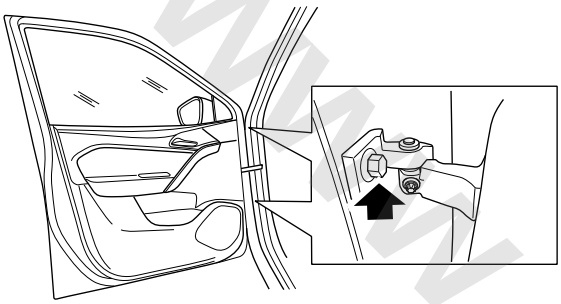

SC110020

4. Use a jack to support the vehicle and adjust the door.
5. Pre-tighten the hinge bolts.
6. Take away the jack, close the door and check if the adjustment is proper.
7. When the desired adjustment is achieved, tighten the hinge bolts to **42–48Nm**, and check the torque.

Front Door Striker Adjustment

Front door striker is a latch with two screws. In most cases, it is necessary to adjust the striker upward/downward or inward/outward:

- Frame damage resulting from a collision.
- Fit a new door weatherstrip.
- The customer complains that the wind noise is too loud.
- It is difficult to open or close the door.

Adjust the lock catch upward/downward or inward/outward according to the following procedures:

1. The door must be positioned correctly.
2. Open the front door.
3. Loosen 2 striker screws. Adjust the striker to align the door pin, and then pre-tighten the screws.

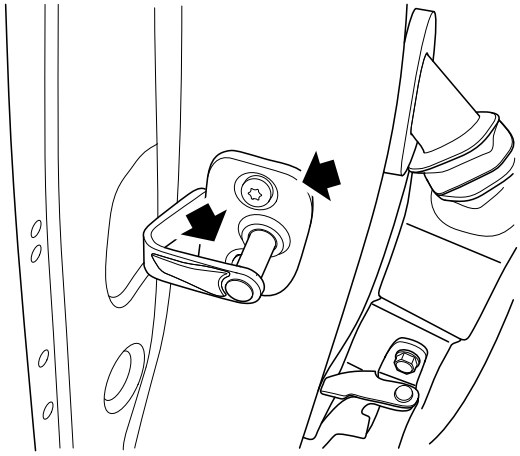

4. Close the door, and check if the rear of the door is flush with the panel of the body side panel and if the door can open and close normally.
5. After the adjustment, open the door, and tighten the screws to **19–25Nm**, and check the torque.
6. Close the door.

www.cargeek.ir

www.cargeek.ir

Front Door Assembly

Remove

1. Disconnect the battery negative.
2. Open the front door.
3. Put the wood block on the jack, and put the jack under the door to support the front door.
4. Remove the bolt fixing the door check to the body, and discard the bolt.

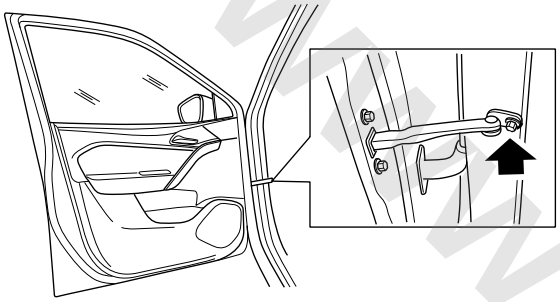

SC110021

5. With the help of an assistant, hold the door, then remove and discard 2 bolts fixing the upper/lower hinges to the door.

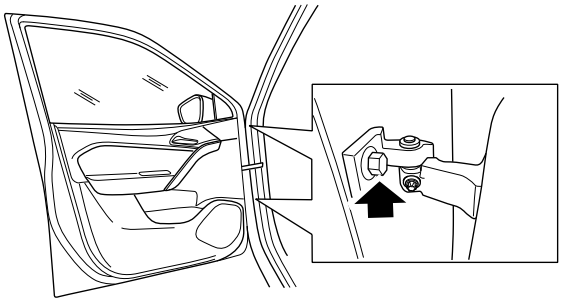

SC110020

Caution: Please protect paint from scratch when removing or refitting the door assembly.

6. With the help of an assistant, hold the door, remove the rubber seal ring on the body, and pull out the connector to disconnect the harness connector plug.

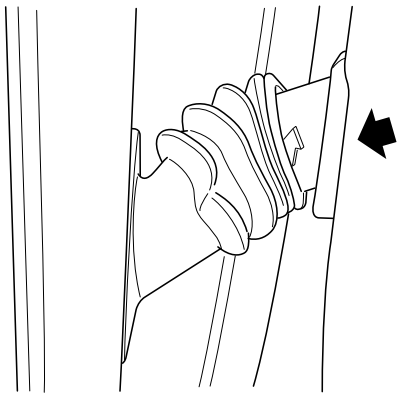

7. Remove the front door assembly.

Refit

1. Position the door to the body with the help of an assistant.
2. Connect the connector plug, and insert the rubber seal ring into the mounting hole of the body.
3. Fit the set bolts between the upper and lower hinges of the front door and the door side, and tighten the torque to **42–48Nm** and check the torque.
4. Fit the set bolts between the door check and the body side, and tighten the torque to**21–29Nm** and check the torque.
5. Close the door and check if the door can be properly opened or closed.
6. Connect the battery negative.

www.cargeek.ir

www.cargeek.ir

www.cargeek.ir

Drive Side Door Outer Handle

Remove

1. Open the driver side door.
2. Remove the driver side door lock cylinder.

☞ **Front Door Lock Cylinder Remove**

3. Lightly pull the outer handle towards the rear of vehicle, and pull out the rear end of the outer handle, then pull out its front end to remove the outer handle.

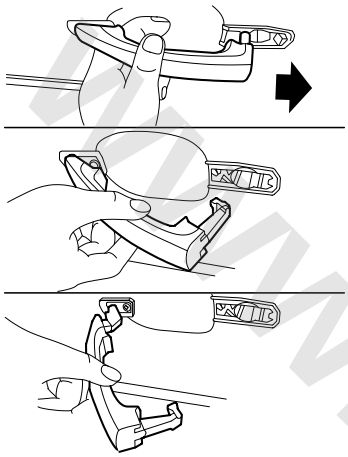

SC110017

Refit

1. Refit the front end of the outer handle into the front mounting hole of the door, and move the outer handle towards the rear vehicle.
2. Refit the rear shim of the outer handle.

Caution: Ensure door handle gaskets are fitted correctly.

3. Refit the rear end of the outer handle, and move it towards the front of the body.
4. Fix the front door lock cylinder to the outer handle plate, tighten the screw to **2–2.5Nm**, and check the torque.
5. Press the plug into the round hole on the door and secure the plug clip firmly so that seal can be achieved.

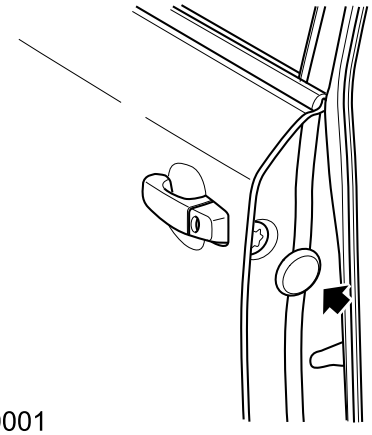

SC110001

6. Close the door and check if the outer handle can work properly.

Driver Side Door Outer Handle (with Keyless Entry)

Remove

1. Open the driver side door and ensure that the windows rise to the highest position.
2. Disconnect the battery negative.
3. Remove the lock cylinder of the driver side door.

☞ **Front Door Lock Cylinder Remove**

4. Remove the driver side door interior trim panel.

☞ **Front Door Interior Trim Panel Remove**

5. Remove the waterproof membrane of the driver side door.
6. Disconnect the antenna harness connector of the driver side door outer handle from the door cavity.

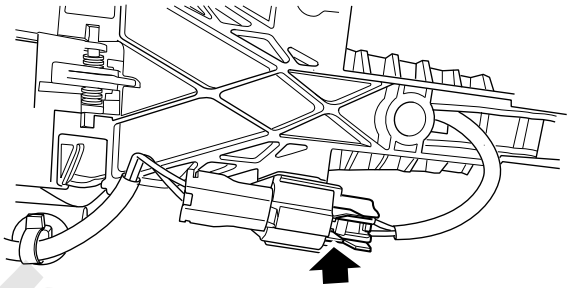

SC110007

7. Lightly pull the outside handle towards the rear of vehicle, and pull out the rear end of the outer handle, then pull out its front end to remove the outer handle.

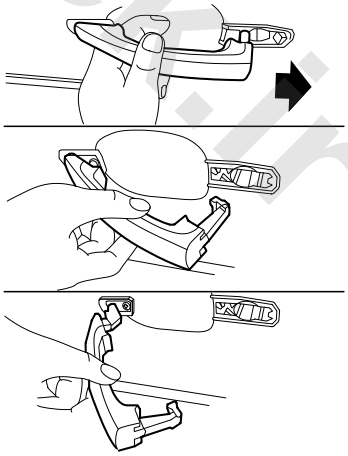

SC110017

Refit

1. Pass the antenna from the outside through the mounting hole of the door, and connect the harness connector.
2. Refit the front end of the outer handle into the front mounting hole of the door, and move the outer handle towards the rear vehicle.
3. Refit the rear shim of the outer handle.

www.cargeek.ir

4. Refit the rear end of the handle, and move it towards the front of the body.
5. Fit the front door lock cylinder to the outer handle plate, tighten the screw to**2–2.5Nm** and check the torque.
6. Check if the door handle can work properly.
7. Press the plug into the round hole on the door and secure the plug clip firmly so that seal can be achieved.

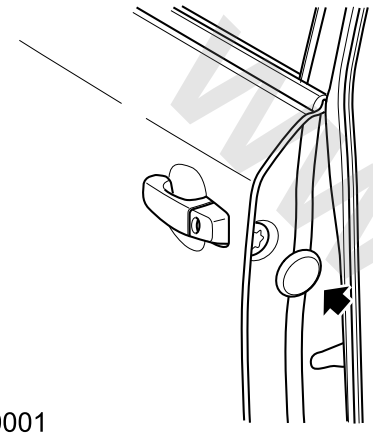

SC110001

8. Refit the waterproof membrane for the driver side door.
9. Refit the driver door interior trim panel.

Front Door Interior Trim Panel Refit

10. Connect the battery negative.
11. Close the driver side door.

Front Passenger Door Outer Handle

Remove

1. Open the front passenger side door.
2. Remove the cap beside the front passenger door.

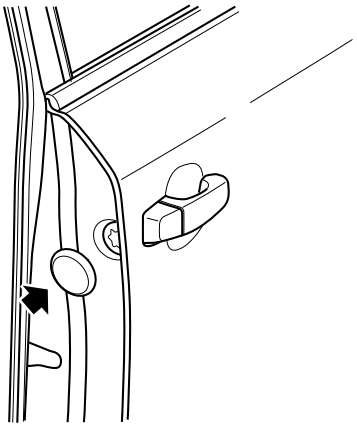

SC110003

3. Loosen the screw fixing the outer handle cover to the outer handle plate , but do not remove it for it is clamped inside.
4. Lightly pull the rear end of the outer handle to remove the outer handle cover.
5. Lightly pull the outer handle towards the rear of vehicle, and pull out the rear end of the outer handle, then pull out its front end to remove the outer handle.

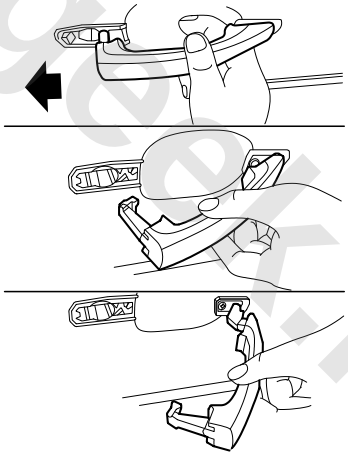

Refit

1. Refit the front end of the outer handle into the front mounting hole of the door, and move the outer handle towards the rear vehicle.
2. Refit the rear shim of the front passenger side door outer handle.
3. Refit the rear end of the handle, and move it towards the front of the body.
4. Refit the front door lock cylinder to the outer handle plate, tighten the screw to**2–2.5Nm**, and check the torque.
5. Check if the outer handle of the front passenger side

www.cargeek.ir

door can work properly.

6. Press the plug into the round hole on the door and secure the plug clip firmly so that seal can be achieved.

Front Passenger Door Exterior Handle (with Keyless Entry)

Remove

1. Open the front side passenger door and ensure that the windows rise to the highest position.
2. Disconnect the battery negative.
3. Remove the cap at the end of the front passenger side door.

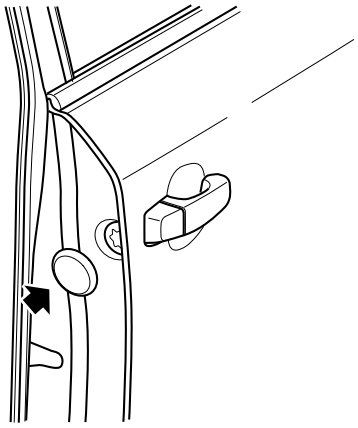

SC110003

4. Loosen the screw fixing the outer handle cover to the outer handle plate, but do not remove it for it is clamped inside.
5. Pull the rear end of the outer handle to remove the outer handle cover.
6. Remove the interior door trim panel.

☞ **Front Door Interior Trim Panel Remove**

7. Remove the door waterproof membrane.
8. Disconnect the antenna harness connector of the outer door handle from the door cavity.

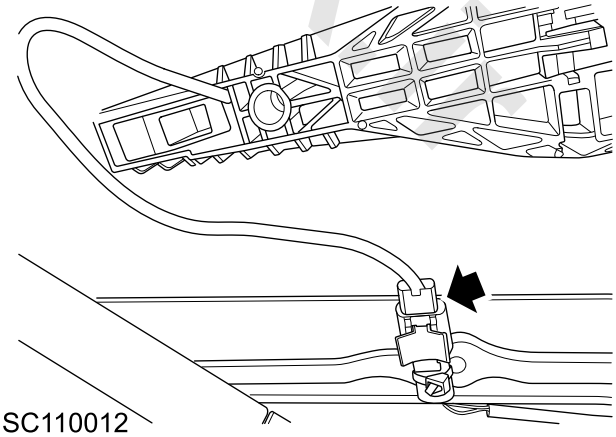

SC110012

9. Lightly pull the outer handle towards the rear of vehicle, and pull out the rear end of the outer handle, then pull out its front end to remove the outer handle.

www.cargeek.ir

www.cargeek.ir

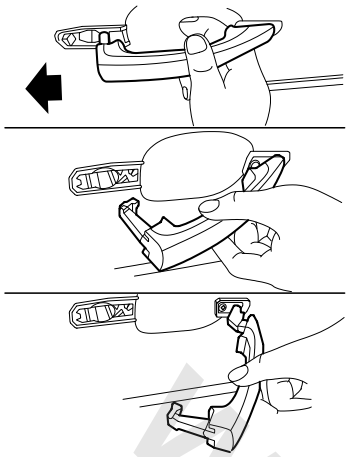

10. Remove the outer handle of the passenger door and take out the outer handle antenna.

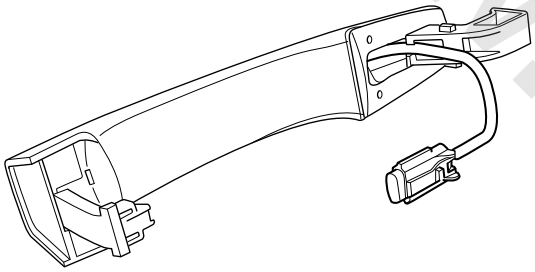

SC110023

Refit

1. Pass the antenna from the outside through the mounting hole of the front door, and connect the harness connector.
2. Refit the front end of the outer handle into the front mounting hole of the door, and move the outer handle towards the rear vehicle.
3. Refit the rear shim of the outer handle.
4. Refit the rear end of the handle, and move it towards the front of the body.
5. Fit the front door lock cylinder to the outer handle plate, tighten the screw to**2–2.5Nm**, and check the torque.
6. Check if the outer door handle can be properly opened.
7. Press the plug into the round hole on the door and secure the plug clip firmly so that seal can be achieved.
8. Fit the door waterproof membrane.
9. Fit the interior door trim panel.

Front Door Interior Trim Panel Refit

10. Connect the battery negative.
11. Close the passenger door.

Front Door Hinge Assembly

Remove

1. Open the front door.
2. With the help of an assistant, remove the front door assembly.

Front Door Assembly Remove

3. From the outside of the body, remove 2 bolts (1) fixing the upper/lower hinges to the body, and discard the bolt.
4. Remove the A pillar lower trim panel.

A Pillar Lower Trim Panel Remove

5. Remove the instrument panel beam assembly.

Instrument Panel Beam Assembly Remove

6. From the inside of the A pillar, remove 2 bolts (2) fixing the upper/lower hinges to the body, and discard the bolt. Remove the upper/lower hinges of the front door.

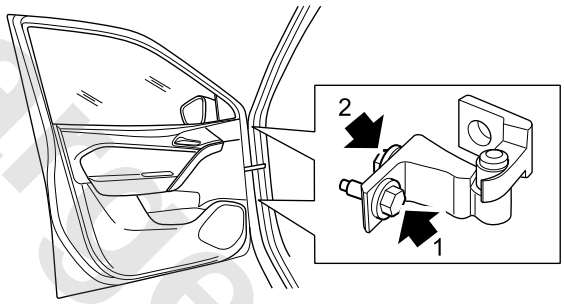

SC110036

Refit

1. Locate the upper hinge of the front door to the body A pillar.
2. Fit a new bolt fixing the upper hinge to the body from the inside of the A pillar, tighten the bolt to **30–36Nm** and check the torque.
3. Locate the lower hinge of the front door to the body A pillar.
4. Fit a new bolt fixing the lower hinge to the body from the inside of the A pillar, tighten the bolt to **30–36Nm** and check the torque.
5. Fit 2 new bolts fixing the lower hinge to the body from the outside of the A pillar, tighten the bolt to **30–36Nm** and check the torque.
6. Fit the instrument panel beam assembly.

Instrument Panel Beam Assembly Refit

7. Fit the A pillar lower trim panel.

A Pillar Lower Trim Panel Refit

8. Fit the front door assembly.

www.cargeek.ir

Front Door Assembly Refit

Front Door Lock Cylinder

Remove

1. Open the driver side door.
2. Remove the cap of the lock cylinder screw at the end of the front door.

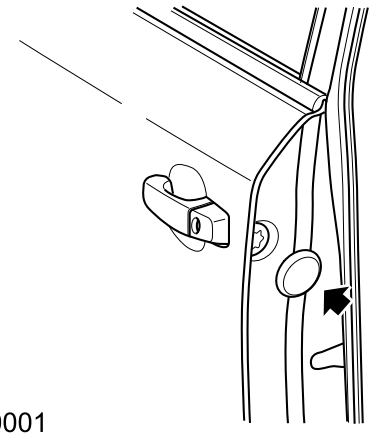

SC110001

3. Loosen the screw fixing the door lock cylinder to the outer door handle plate, but do not remove it for it is clamped inside.
4. Pull the rear end of the outer handle to remove the front door lock cylinder.
5. Disconnect the lock cylinder cover and lock cylinder.

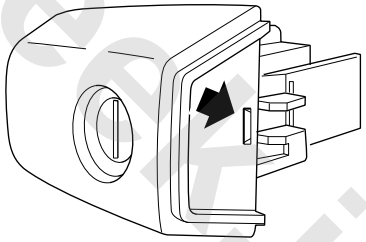

SC110032

Refit

1. Connect the lock cylinder with the cover.
2. Pull up the rear end of front door outer handle and locate the front door lock cylinder assembly to the front door mounting hole. Tighten the screws to the torque **2–2.5Nm**, and check the torque.
3. Press the screw cap into the round hole at the side of the door, and make sure that the clips on the cap are fully engaged for good sealing effect.

www.cargeek.ir

Front Door Lock Assembly

Remove

1. Open the front door.
2. Ensure that the windows rise to the highest position.
3. Disconnect the battery negative.
4. Remove the front door interior trim panel.

Front Door Interior Trim Panel Remove

5. Remove the front door waterproof membrane.
6. Release the clips securing the lock cylinder link and the outer handle link.

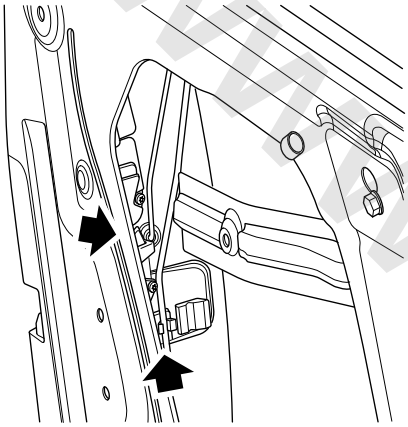

SC110005

7. Remove 3 screws fixing the door lock to the door.

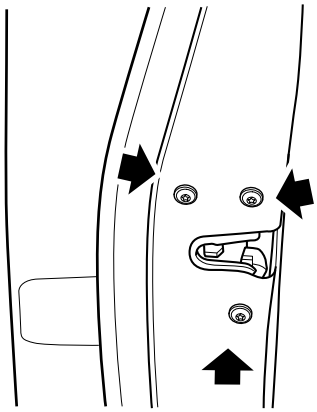

SC110022

8. Disconnect the harness connector of the door lock.
9. Disconnect the inner cable from the lock.

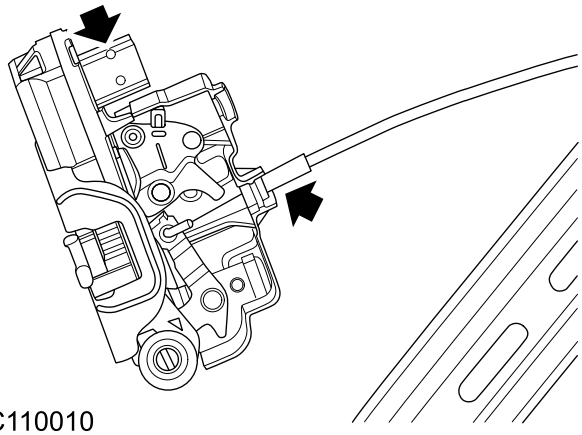

SC110010

Refit

1. Connect the inner cable of the front door to the front door lock.
2. Connector the harness connector of the front door lock.
3. Locate the lock assembly to the door panel from the cavity inside the door, and tighten the screw to **8–12Nm** from top to bottom, and check the torque.
4. Fix the outer handle link and lock cylinder link of the front door into the corresponding clip of the front door lock.
5. Fit the front door waterproof membrane.
6. Fit the front door interior trim panel.

Front Door Interior Trim Panel Refit

7. Check if the outer/inner handles of the front door can work properly.
8. Connect the battery negative.
9. Close the front door.

www.cargeek.ir

www.cargeek.ir

Front Door Outer Handle Plate

Remove

1. Open the front door.
2. Ensure that the windows rise to the highest position.
3. Remove the front door interior trim panel.

Front Door Interior Trim Panel Remove

4. Remove the front door waterproof membrane.
5. Remove the outer handle of the front door.

Front Door Outer Handle Remove

6. Remove the rear shim of the front door outer handle.
7. Remove the screw fixing the outer handle plate of the front door outer handle.

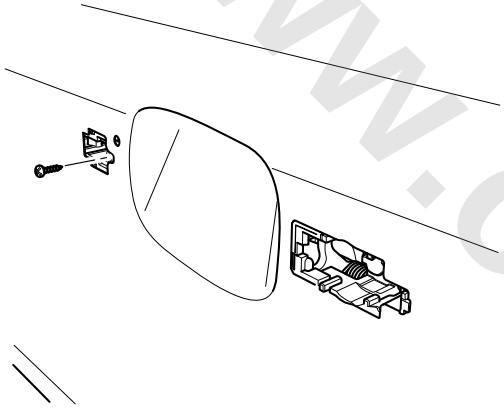

SC110004

8. Release the clip fixing the lock cylinder link and outer handle link.

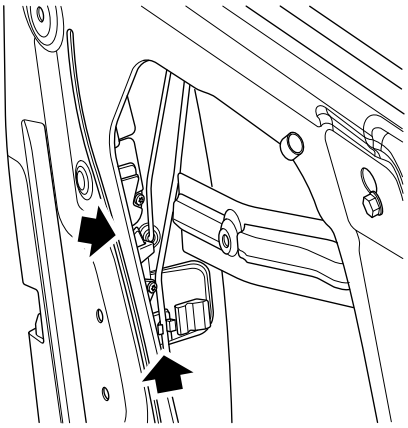

SC110005

9. Remove the outer handle plate assembly from the cavity inside the door.
10. Disconnect the outer handle link and lock cylinder link of the front door from the outer handle plate of the front door outer handle.

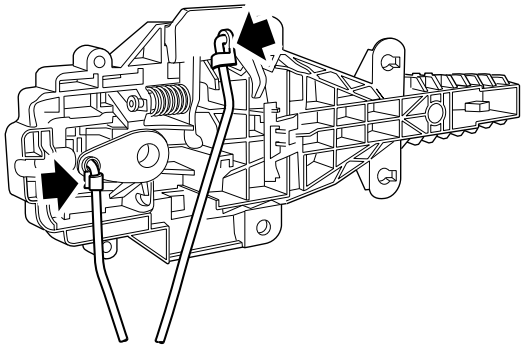

SC110029

Refit

1. Fix the outer handle link and lock cylinder link to the corresponding clip of the front door outer handle plate.
2. Fit the outer handle plate assembly of the front door from the cavity of the front door, and locate it to the mounting position on the outside door panel.
3. Fit the screw fixing the outer handle plate to the door from the outside of the door, tighten the screw to **2–2.5Nm**, and check the torque.
4. Fix the outer handle link and lock cylinder link to the corresponding slot of the door lock.
5. Fit the front/rear shim of the front door outer handle.
6. Fit the front door outer handle.

Front Door Outer Handle Refit

7. Try to open the door with the outer handle and lock cylinder and ensure all parts are correctly fitted.
8. Fit the front door waterproof membrane.
9. Fit the front door interior trim panel.

Front Door Interior Trim Panel Refit

www.cargeek.ir

www.cargeek.ir

Rear Door Outer Handle

Remove

1. Open the rear door.
2. Remove the cap at the side of the rear door.
3. Loosen the screw fixing the outer handle cover to the outer handle plate, but do not remove it for it is clamped inside.

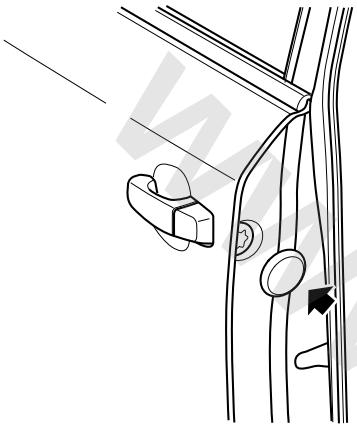

4. Pull the rear end of the outer handle to remove the outer handle cover.
5. Lightly pull the outer handle towards the rear of vehicle, and pull out the rear end of the outer handle, then pull out its front end to remove the outer handle.

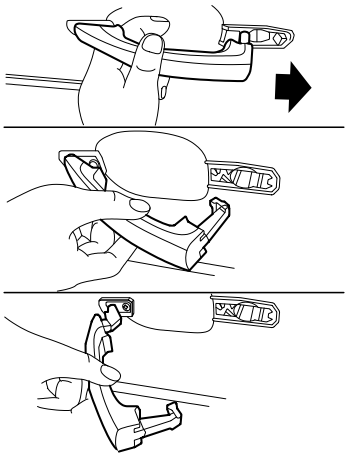

SC110017

Refit

1. Fit the front of the rear door outer handle into the front mounting hole of the door, and move the outer handle towards the rear vehicle.
2. Fit the rear shim of the outer handle.
3. Fit the rear of the rear door outer handle into the plate of the outer handle.
4. Fix the outer handle cover to the outer handle plate, tighten the screw to **2–2.5Nm** and check the torque.
5. Press the cap into the round hole on the door and secure the cap clip firmly so that seal can be achieved.
6. Close the door and check if the outer handle can work properly.

www.cargeek.ir

www.cargeek.ir

Rear Door Adjustment

Rear Door Hinge Adjustment

1. Open the rear door.
2. Put the wood block on the jack, and put the jack under the door to support the rear door.
3. Loosen 2 bolts securing the upper/lower door hinges of the rear door to the rear door.

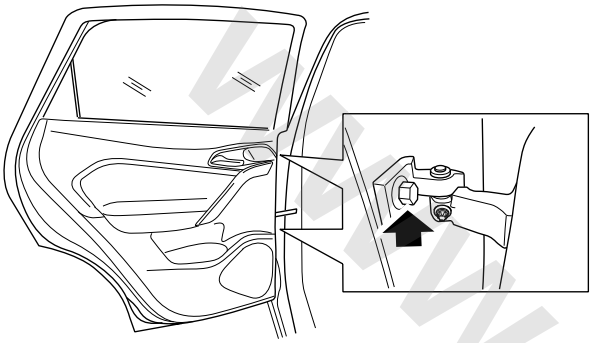

SC120002

4. Use a jack to support the vehicle and adjust the door.
5. Pre-tighten the bolt fixing the hinge to the door.
6. Take away the jack, close the door and check if the adjustment is proper.
7. When the desired adjustment is achieved, tighten the hinge bolts to **42–48Nm**, and check the torque.

Rear Door Lock Catch Adjustment

Rear door striker is a latch with two screws. In most cases, it is necessary to adjust the striker upward/downward or inward/outward:

- Frame damage resulting from a collision.
- Fit a new door weatherstrip.
- The customer complains that the wind noise is too loud.
- It is difficult to open or close the door.

Adjust the lock catch upward/downward or inward/outward according to the following procedures:

1. The door must be positioned correctly.
2. Open the rear door.
3. Loosen 2 striker screws. Adjust the striker to align the door pin, and then pre-tighten the screws.

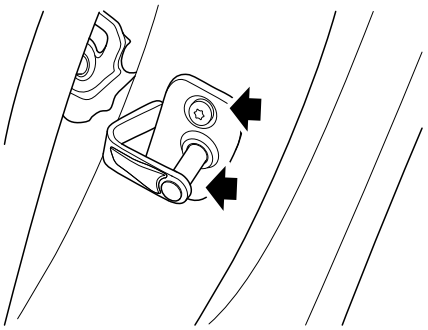

4. Close the door, and check if the rear of the door is flush with the panel of the body side panel and if the door can open and close normally.
5. After the adjustment, open the door, and tighten the screws to **15–21Nm**, and check the torque.
6. Close the door.

www.cargeek.ir

www.cargeek.ir

www.cargeek.ir

Rear Door Assembly

Remove

1. Disconnect the battery negative.
2. Open the rear door.
3. Put the wood block on the jack, and put the jack under the door to support the rear door.
4. Remove the bolt fixing the door check to the body, and discard the bolt.

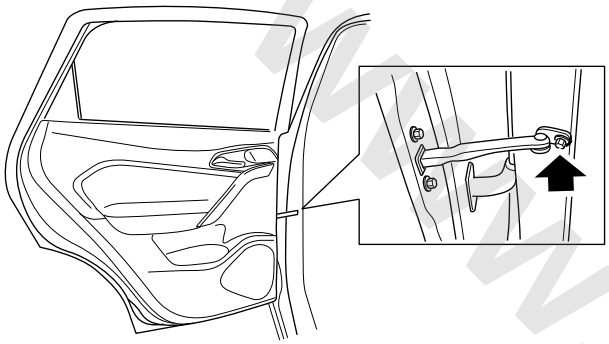

SC120001

5. Prize up the rubber seal ring on the body, and pull out the connector to disconnect the connector interface.
6. With the help of an assistant, hold the outside of the door, then remove and discard 2 bolts fixing the upper/lower hinges to the door.

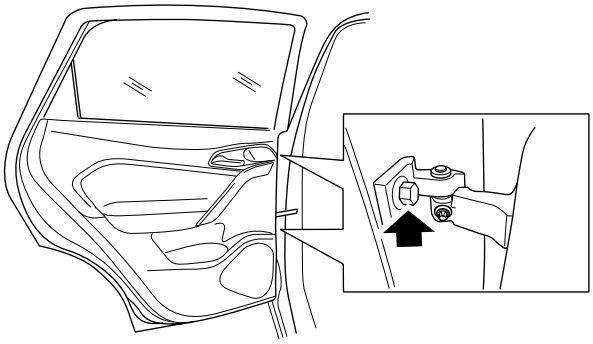

SC120002

Caution: Please protect paint from scratch when removing or refitting the door assembly.

7. Remove the rear door assembly.

Refit

1. With assistance, locate the door to the vehicle body.
2. Connect the connector port, and embed the rubber seal ring into the mounting hole of the body.
3. Fit 2 new bolts fixing the upper and lower hinges of the rear door to the door, tighten to **42–48Nm** and check the torque.
4. Fit new bolts fixing the door checker to the body, tighten to and check the torque.
5. Close the door and check if the door can be properly opened or closed.
6. Connect the battery negative.

www.cargeek.ir

www.cargeek.ir

Rear Door Hinge Assembly

Remove

1. With the help of an assistant, remove the rear door assembly.

Rear Door Assembly Remove

2. From the outside of the body, remove 2 bolts (1) fixing the upper/lower hinges to the body, and discard the bolt.
3. Remove the B pillar lower trim panel.

B Pillar Lower Trim Panel Remove

4. From the inside of the B pillar, remove 1 bolt (2) fixing the upper hinge of the rear door to the body, and discard the bolt. Remove the upper hinge of the rear door.
5. From the inside of the B pillar, remove 1 bolt (2) fixing the lower hinge of the rear door to the body, and discard the bolt. Remove the lower hinge of the rear door.

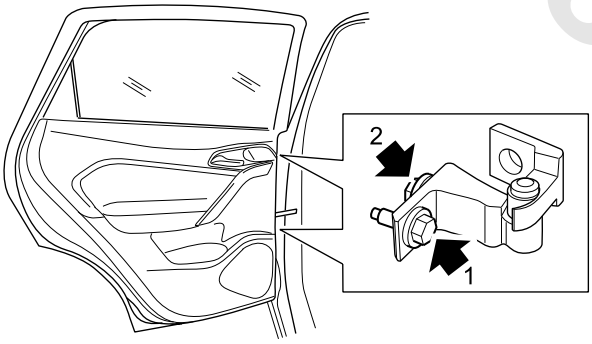

SC120035

Refit

1. Locate the lower hinge of the rear door to the body B pillar.
2. Fit a new bolt fixing the lower hinge to the body from the inside of the B pillar, tighten the bolt to **30–36Nm** and check the torque.
3. Locate the upper hinge of the rear door to the body B pillar.
4. Fit a new bolt fixing the upper hinge to the body from the inside of the B pillar, tighten the bolt to **30–36Nm** and check the torque.
5. Fit the B pillar lower trim panel.

B Pillar Lower Trim Panel Refit

6. Fit 2 new bolts fixing the upper/lower hinges to the body from the outside of the B pillar, tighten the bolt to **30–36Nm** and check the torque.
7. Fit the rear door assembly.

Rear Door Assembly Refit

Rear Door Lock Assembly

Remove

1. Open the rear door.
2. Ensure that the window rise to the highest position.
3. Remove the rear door interior trim panel assembly.

Rear Door Interior Trim Panel Assembly Remove

4. Carefully remove the waterproof membrane.
5. With a flat blade screwdriver, carefully remove the clip fixing the outer handle link to the lock.
6. Remove 3 bolts fixing the rear door lock, and take out the door lock from the door cavity carefully.

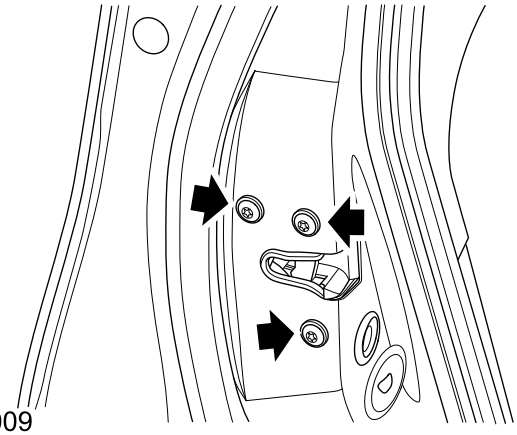

SC110009

7. Disconnect the harness connector of the lock.
8. Carefully disconnect the inner handle cable from the lock assembly to remove the lock assembly.

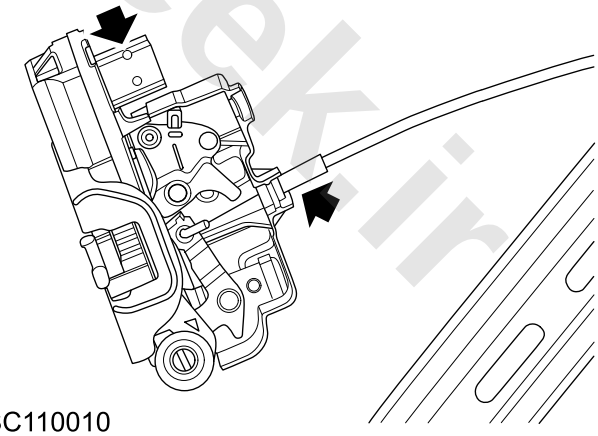

SC110010

Refit

1. Fit the inner cable of the rear door to the lock.
2. Connect the harness connector of the lock.
3. Locate the lock to the mounting position from the cavity inside the door, fit 3 screws and tighten to **8–12Nm**, and check the torque.
4. Connect the outer handle link and lock of the rear door, and secure the clip.
5. Fit the rear door waterproof membrane.

www.cargeek.ir

www.cargeek.ir

6. Fit the rear door interior trim panel.

Rear Door Interior Trim Panel Refit

7. Check if the outer/inner handles of the rear door can work properly.

Front Side Door Window Weatherstrip

Remove

1. Disconnect the battery negative.
2. Remove the front door interior trim panel.

Front Door Interior Trim Panel Remove

Caution: Before taking down the panel, please raise the glass so that the bolts is just in the mounting holes of the door.

3. Remove the front door waterproof membrane from the door panel.
4. Remove the front door glass.

Front Door Glass Remove

5. Remove the weatherstrip of the front side door window carefully.

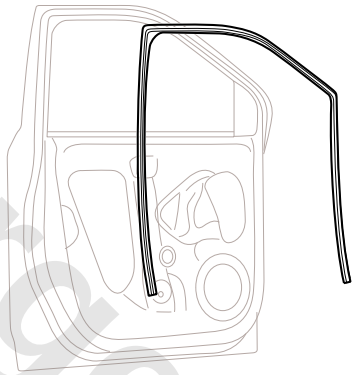

SC110040

Refit

1. Fit the weatherstrip of the front door window.
2. Fit front door glass.

Front Door Glass Refit

3. Fit the front door waterproof membrane.

Front Door Waterproof Membrane Refit

4. Fit the front door interior trim panel.

Front Door Interior Trim Panel Refit

5. Connect the battery negative.

www.cargeek.ir

www.cargeek.ir

Front Door Window Inner Weatherstrip

Remove

1. Open the front door.
2. Remove the front door interior trim panel.

☞ **Remove of Front Door Interior Trim Panel**

3. Pull up and remove the front door window inner weatherstrip.

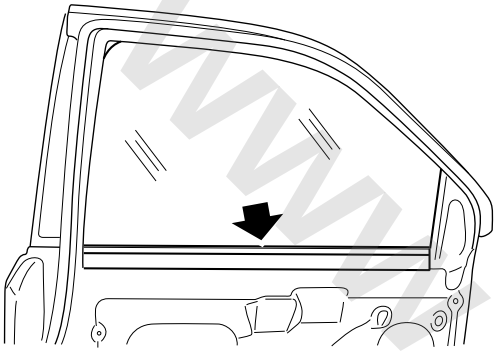

SC110031

Refit

1. Align the opening of weatherstrip with the sealing part of door inner panel, and fit the front door window inner weatherstrip.
2. Refit the front door interior trim panel.

☞ **Refit of Front Door Interior Trim Panel**

Front Door Window Outer Weatherstrip

Remove

1. Open the front door.
2. Remove the screw securing the front door window outer weatherstrip to door panel.

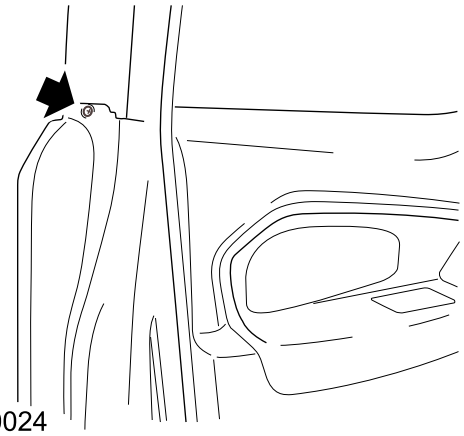

SC110024

3. Carefully release the clips securing the outer weatherstrip to the door from the front to the end of the door and remove it.

Refit

1. Align 5 plastic clips on the front door window outer weatherstrip with 5 mounting holes on the door panel, then fit them to the door panel from A pillar to B pillar.
2. Fit a screw securing the front door window outer weatherstrip to the body, tighten to **1–2Nm**, and check the torque.
3. Close the front door.

www.cargeek.ir

www.cargeek.ir

Front Door Window Regulator

Remove

1. Open the front door.
2. Disconnect the battery negative.
3. Remove the front door interior trim panel.

Front Door Interior Trim Panel Remove

Caution: Before taking down the panel, please raise the glass so that the bolts is just in the mounting holes of the door.

4. Remove the front door waterproof membrane from the door panel.
5. Remove the front door glass.

Front Door Glass Remove

6. Remove 5 bolts fixing the glass regulator to the door panel.

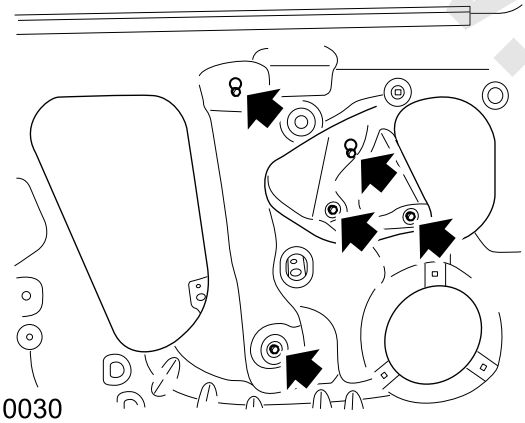

SC110030

7. Carefully remove the glass regulator from the door cavity.

Refit

1. Fit the glass regulator into the front door cavity, fit 5 bolts securing the glass regulator on the door panel, tighten the bolt to **6.5–10Nm** from top to bottom/left to right and check the torque.
2. Fit front door glass.

Front Door Glass Refit

3. Fit the front door waterproof membrane.

Front Door Waterproof Membrane Refit

4. Fit the front door interior trim panel.

Front Door Interior Trim Panel Refit

5. Connect the battery negative.
6. Check if the window glass regulator can work. For glass regulators with "one-button control" and "anti-pinch" functions, when the battery is disconnected, these functions will be disabled; when the battery is connected, these function can be resumed by initialization of the regulator.

Caution: For a glass regulator which with "one-touch ascending " function , once power off, the "one-touch ascending " function will be lost. After power on, press the switch to ascend the window to the top, press and hold it for 5s to complete the glass regulator initialization, then the "one-touch ascending "function will be recovered.

www.cargeek.ir

www.cargeek.ir

Front Door Window Glass

Remove

1. Open the front door.
2. Disconnect the battery negative.
3. Remove the front door interior trim panel.

Front Door Interior Trim Panel Remove

Caution: Before taking down the panel, please raise the glass so that the bolts is just in the mounting holes of the door.

4. Remove the front door waterproof membrane from the door panel.
5. Remove the inner weatherstrip of the front door window.

Front Door Window Inner Weatherstrip Remove

6. Remove the outer weatherstrip of the front door window.

Front Door Window Outer Weatherstrip Remove

7. Remove 2 screws securing the glass to the window regulator.

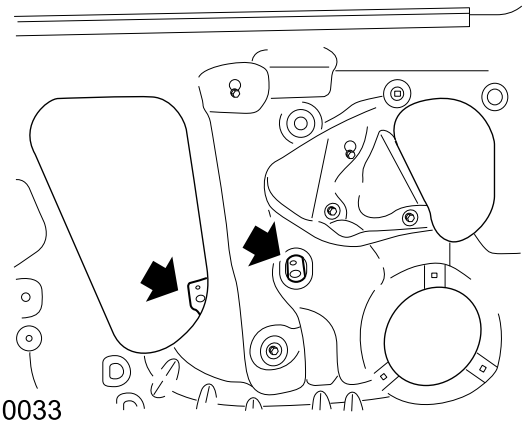

SC110033

8. Carefully remove the glass from the door window frame.

Refit

1. Carefully place the glass between the inner panel and outer panel through the window frame, and fit the slot weatherstrip from the two sides.
2. Descend the glass slowly until it touches the slider of the glass regulator, fix the glass clip to the small terrace of the slider and align the hole of the glass clip with the slider hole of the regulator.
3. Fit 2 screws fixing the front door glass to the front door glass regulator, tighten to **6.5–10Nm** and check the torque.
4. Fit the front door waterproof membrane.
5. Fit the inner weatherstrip of the front door window.

Front Door Window Inner Weatherstrip Refit

6. Fit the outer weatherstrip of the front door window.

Front Door Window Outer Weatherstrip Refit

7. Fit the front door interior trim panel.

Front Door Interior Trim Panel Refit

8. Connect the battery negative.

www.cargeek.ir

www.cargeek.ir

Power Window Switch - Rear Door

Remove

1. Remove the rear door interior trim panel.

☞**Rear Door Interior Trim Panel Remove**

2. Release 4 clips securing the rear door power window switch to the rear door interior trim panel.
3. Disconnect the harness connector from the back of rear door power window switch.
4. Remove the rear door power window switch.

Refit

1. Connect the connector at the back of rear door power window switch to the rear door harness.
2. Fit the rear door power window switch to the rear door interior trim panel and secure.
3. Refit the rear door interior trim panel.

☞**Refit of Rear Door Interior Trim Panel**

Power Window Switch - Driver

Remove

1. Remove the left front door interior trim panel.

☞**Remove of Front Door Interior Trim Panel**

2. Carefully release 6 clips securing the driver power window switch to the front door interior trim panel.
3. Disconnect the harness connector from the back of driver power window switch.
4. Remove the drive power window switch.

Refit

1. Connect the connector at the rear of the driver power window switch to the left front door harness.
2. Fit the driver power window switch to the interior trim panel of the front door and secure it.
3. Fit the left front door interior trim panel.

☞**Front Door Interior Trim Panel Refit**

4. Connect the battery negative.
5. Check if the window glass regulator can work. When removing, the "one-button up" and "anti-pinch" functions may fail, in this case, perform ☞**self-learning for the driver power window switch**
.

www.cargeek.ir

www.cargeek.ir

www.cargeek.ir

Power Window Switch - Front Passenger

Remove

1. Remove the right front door interior trim panel.

☞ **Remove of Front Door Interior Trim Panel**

2. Carefully release 6 clips securing the passenger power window switch to the front door interior trim panel handle.
3. Disconnect the harness connector from the back of passenger power window switch.
4. Remove the passenger power window switch.

Refit

1. Connect the connector at the back of passenger power window switch to the right front door harness.
2. Fit the passenger power window switch to the front door interior trim panel and secure.
3. Refit the right front door interior trim panel.

☞ **Refit of Front Door Interior Trim Panel**

Rear Door Window Outer Weatherstrip

Remove

1. Open the rear door.
2. Remove the screw securing the rear door window outer weatherstrip to door panel from the rear door B pillar.

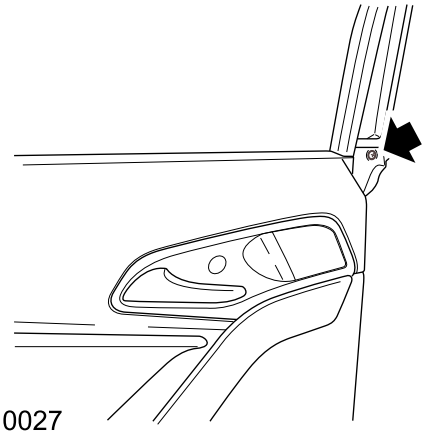

3. Carefully release the clips securing the outer weatherstrip to the rear door from the front to the end of the rear door and remove.

Refit

1. Align 5 plastic clips on the rear door windowsill outer weatherstrip with 5 mounting holes on the door panel, then fit them to the revers of the door panel from the front to the end of the rear door.
2. Fit a screw securing the rear door window outer weatherstrip to the rear panel, tighten to **1–2Nm**, and check the torque.
3. Close the rear door.

www.cargeek.ir

www.cargeek.ir

Rear Door Window Inner Weatherstrip

Remove

1. Open the rear door.
2. Remove the rear door interior trim panel.

Rear Door Interior Trim Panel Remove

3. Remove the rear door window inner weatherstrip.

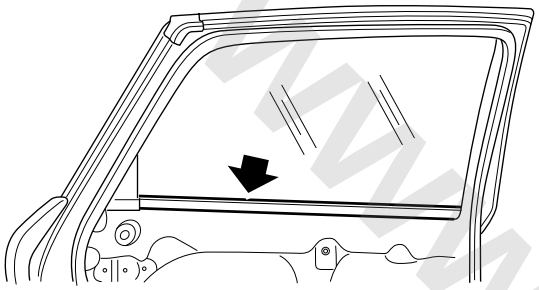

SC110026

Refit

1. Align the opening of weatherstrip with the sealing part of door inner panel, and fit the rear door window inner weatherstrip.
2. Refit the rear door interior trim panel.

Refit of Rear Door Interior Trim Panel

Rear Door Window Weatherstrip

Remove

1. Open the rear door.
2. Disconnect the battery negative.
3. Remove the rear door interior trim panel.

Rear Door Interior Trim Panel Remove

Caution: Before taking down the panel, please raise the glass so that the bolts is just in the mounting holes of the door.

4. Remove the rear door waterproof membrane from the door panel.
5. Remove the rear door glass.

Rear Door Glass Remove

6. Remove the weatherstrip of the rear door glass.

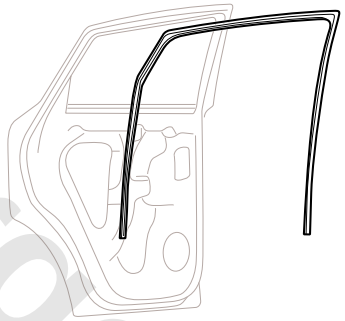

SC120025

Refit

1. Refit the rear door window weatherstrip.
2. Refit the rear door window.

Rear Door Window Refit

3. Refit the rear door waterproof membrane.
4. Refit the rear door interior trim panel.

Refit of Rear Door Interior Trim Panel

5. Connect the battery negative.

www.cargeek.ir

www.cargeek.ir

Rear Door Window Regulator

Remove

1. Open the rear door.
2. Disconnect the battery negative.
3. Remove the rear door interior trim panel.

Rear Door Interior Trim Panel Remove

Caution: Before taking down the panel, please raise the glass so that the bolts is just in the mounting holes of the door.

4. Remove the rear door waterproof membrane from the door panel.
5. Remove the rear door glass.

Rear Door Glass Remove

6. Remove 5 bolts fixing the glass regulator to the door panel.

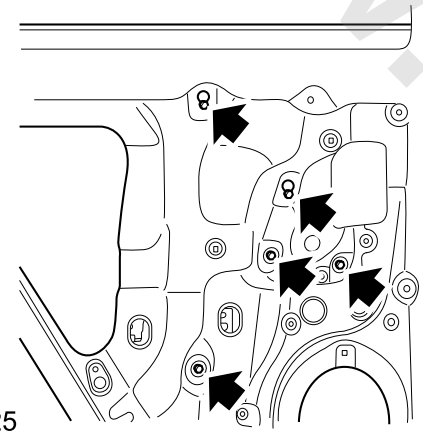

SC110025

7. Carefully remove the glass regulator from the door window frame.

Refit

1. Fit the glass regulator into the rear door cavity, fit 5 bolts securing the glass regulator on the door panel, tighten the bolt to **6.5–10Nm** from top to bottom/left to right and check the torque.
2. Fit the rear door glass.

Rear Door Glass Refit

3. Fit the rear door waterproof membrane.

Rear Door Waterproof Membrane Refit

4. Fit the rear door interior trim panel.

Rear Door Interior Trim Panel Refit

5. Connect the battery negative.
6. Check if the window glass regulator can work.

Rear Door Window Glass

Remove

1. Open the rear door.
2. Disconnect the battery negative.
3. Remove the rear door interior trim panel.

Rear Door Interior Trim Panel Remove

Caution: Before taking down the panel, please raise the glass so that the bolts is just in the mounting holes of the door.

4. Remove the inner weatherstrip of the rear door window.

Rear Door Window Inner Weatherstrip Remove

5. Remove the outer weatherstrip of the rear door window.

Rear Door Window Outer Weatherstrip Remove

6. Remove the rear door waterproof membrane from the door panel.
7. Remove 2 screws securing the glass to the window regulator.

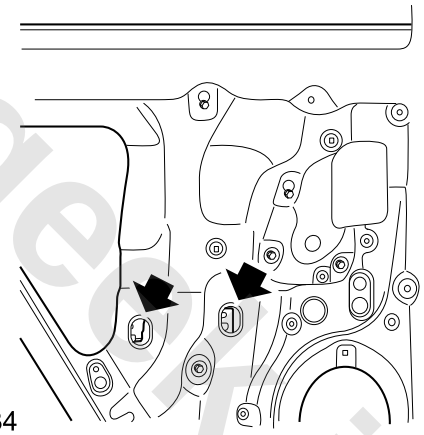

SC110034

8. Carefully remove the glass from the door window frame.

Refit

1. Place the glass between the inner panel and outer panel through the door window frame, and fit the rear door window weatherstrip.
2. Descend the glass slowly until it touches the slider of the glass regulator, fix the glass clip to the small terrace of the slider and align the hole of the glass clip with the slider hole of the regulator.
3. Fit 2 screws fixing the rear door glass to the rear door glass regulator, tighten to **6.5–10Nm**, and check the torque.
4. Fit the rear door waterproof membrane.
5. Fit the outer weatherstrip of the rear door window.

Rear Door Window Outer Weatherstrip Refit

www.cargeek.ir

www.cargeek.ir

6. Fit the inner weatherstrip of the rear door window.

☞ **Rear Door Window Inner Weatherstrip Refit**

7. Fit the rear door interior trim panel.

☞ **Rear Door Interior Trim Panel Refit**

8. Connect the battery negative.

www.cargeek.ir

www.cargeek.ir

www.cargeek.ir

Front Closures

Specifications

Torque

Description	Value
Bolt - hood latch safety to hood panel	7–10Nm
Nut - hood hinge to hood panel	19–25Nm
Bolt - hood hinge to body	26–34Nm
Bolt - hood hinge to body	26–34Nm
Bolt - hood latch to platform	7–10Nm
Screw - hood open handle	1.3–1.9Nm
Bolt - fender to body	7–10Nm
Bolt-From front bumper impact bar to fend upper tie bar	7–10Nm
Bolt-intercooler to platform	4–6Nm
Bolt-From front bumper impact bar to body in white	40–50Nm
Nut-Air conditioner pipe to condenser	19–25Nm
Bolt - head lamp bracket to body	7–10Nm
Bolt - head lamp bracket to MFE	7–10Nm
Bolt- wiper container to bodywork	4–6Nm
Bolt- expansion tank to body	4–6Nm
Bolt - battery bracket to body	19–25Nm
Nut - nut to battery clip	3–5Nm

www.cargeek.ir

www.cargeek.ir

www.cargeek.ir

Service Procedures

Bonnet Assembly

Remove

Warning: Take special attention to avoid vehicle damage and personal injury.

1. Open and support the bonnet properly.
2. Remove 4 nuts fixing the bonnet hinges to the bonnet.

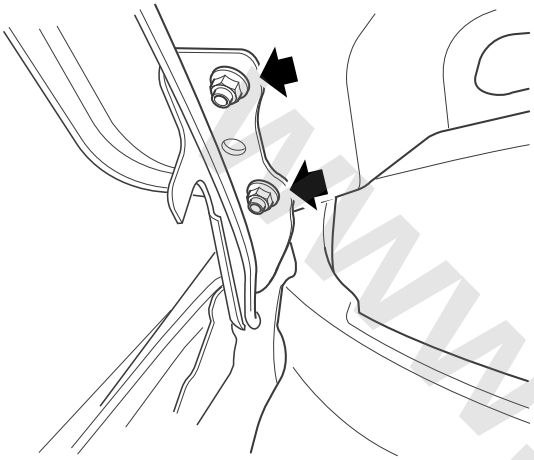

3. With the help of an assistant, remove the bonnet.
4. Remove the bonnet safety lock from the bonnet.

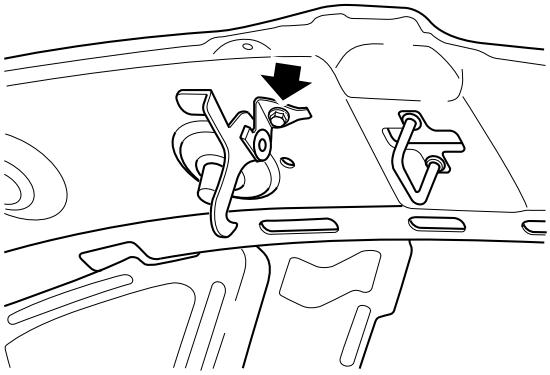

SC310001

Refit

Warning: Bonnet will drop under its own weight during removal and refit, ensure panel is fully supported.

1. Secure the bonnet safety lock on the bonnet with bolts, tighten the bolts to **7–10Nm** and check the torque.
2. With the help of an assistant, position the bonnet to the body.

Caution: DO NOT damage the thread on the bolt when inserting the bolt into the fit hole.

3. Fit 4 nuts securing the bonnet hinges to the bonnet on both sides, but do not tighten the nuts.
4. Check if the bonnet is properly positioned, and adjust the clearance and surface difference between the bonnet and the front fender. It shall meet DTS (dimension technical specification) requirements.
5. After adjustment, tighten the 4 nuts to **19–25Nm**, check the torque and close the bonnet.

www.cargeek.ir

www.cargeek.ir

Bonnet Hinge Assembly

Remove

Warning: Take special attention to avoid vehicle damage and personal injury.

1. Mark the hinge relative to the bonnet for positioning during installation.
2. With assistance, remove the bonnet.

☞ **Bonnet Assembly Remove**

3. Remove 4 bolts fixing the hinges to the body side on both sides.

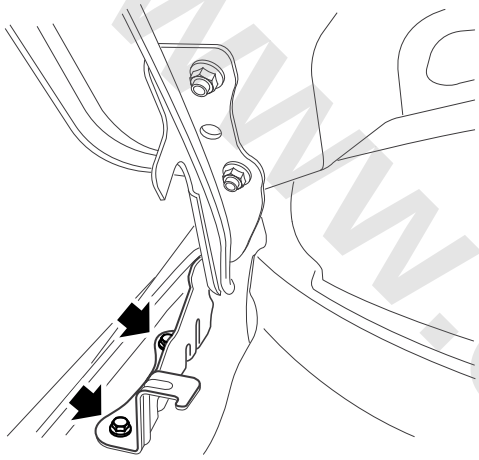

4. Remove the hinges on both sides.

Refit

1. Locate the hinges to the body on both sides, and align it with the position marked when removing.
2. Fit 4 bolts fixing the hinges to the body on both sides , tighten the bolts to **26–34Nm**, and check the torque.
3. With assistance, fit the bonnet.

☞ **Bonnet Assembly Refit**

Warning: Bonnet will drop under its own weight during removal and refit, ensure panel is fully supported.

Bonnet Inspection and Adjustment

Inspections

Inspect the positioning of the bonnet:

1. The curve from the bonnet to the front fender must be unblocked;
2. The gap between the bonnet and the front fender must be uniform;
3. The front rake of the bonnet must be kept level with the front fender.

Adjustment

1. Mark the profile of the bonnet hinges with a non permanent marker.
2. Loosen the nuts securing the hinges to the bonnet.

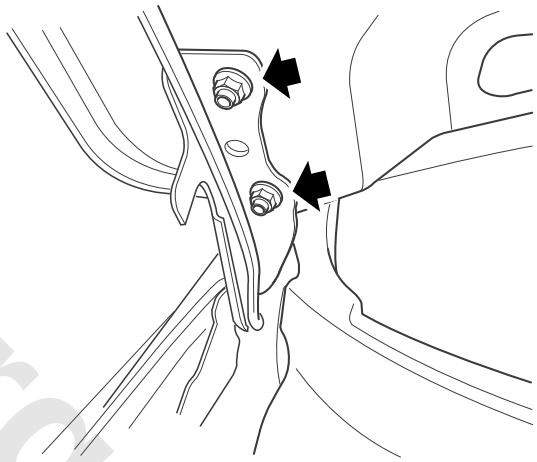

3. Adjust the bonnet and align it with the front fender.
4. Tighten the nut on the bonnet hinge to**19–25Nm**, and check the torque.
5. Loosen the bolts securing the hinges to the body.
6. Adjust the position of the bonnet at lateral and front/rear direction to align the bonnet with the front fender, and the front corner of the bonnet should be horizontal with the front fender.
7. Tighten the hinge bolts (body side) to **26–34Nm**, and check the torque.

www.cargeek.ir

www.cargeek.ir

Bonnet Lock Body Assembly

Remove

1. Open and support the bonnet securely.
2. Remove the front bumper assembly.

☞ **Front Bumper Remove**

3. Mark the lock position on the upper radiator beam bracket, which is used for alignment when fitting it.
4. Remove three bolts (1) fixing the bonnet lock to the upper radiator beam.
5. Disconnect the harness connector (2) of the bonnet lock.

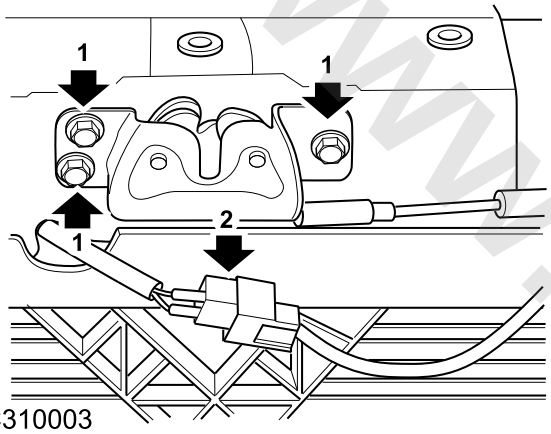

SC310003

6. Disconnect the bonnet cable assembly from the lock assembly to remove the lock assembly.

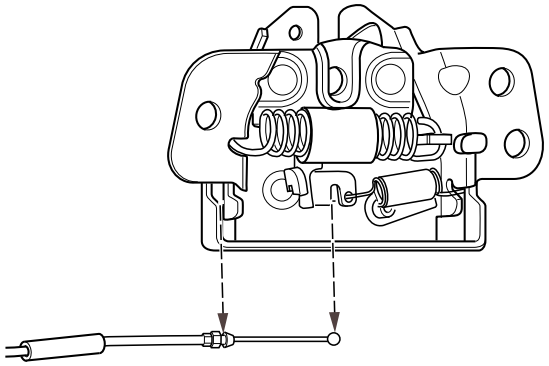

SC310002

Refit

1. Connect the bonnet cable assembly to the lock body assembly securely, put the ball end of the cable core wire into the stop hook groove on the bonnet lock body and the core wire into the long groove on the bonnet lock housing respectively, and align the ring groove on the main cable protector pipe end with the mounting groove on the lock case, then firmly push it until a "click" sound is heard.
2. Position the bonnet lock body assembly to the bracket of the upper radiator beam, and align it with the position marked when removing.
3. Secure the lock body assembly to the bracket of the upper radiator beam with 3 bolts, and do not tighten the bolts to the specified torque at this step.
4. Close the bonnet, observe the relative position of the lock and the striker, then adjust the position of the lock body to make sure that the striker can enter the tab smoothly.
5. After adjustment, tighten the 3 bolts to **7–10Nm**, and check the torque.
6. Fit the front bumper.

☞ **Front Bumper Refit**

7. Close the bonnet.

www.cargeek.ir

www.cargeek.ir

Bonnet Release Cable

Remove

1. Open the bonnet and support it securely with the rod.
2. Remove the bonnet lock assembly.

Bonnet Lock Assembly Remove

3. Release the bonnet cable assembly from the bonnet lock.

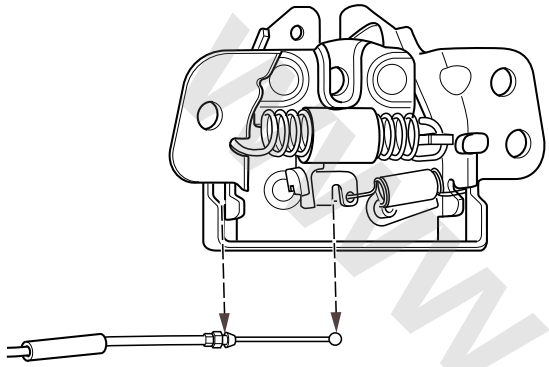

SC310002

4. Release the clip of the bonnet cable assembly from the engine compartment.
5. Release the bonnet cable assembly from the release handle.
6. Pull out the bonnet cable assembly from the engine compartment.

Refit

1. Locate the cable assembly of the bonnet to the engine compartment, fit the flat blade end to the driver compartment through the bulkhead hole of the front engine compartment, and secure it in the bulkhead hole with the rubber seal ring of the cable assembly.
2. Insert the column shape end of the cable assembly to the column hole of the release handle, put the core wire into the long slot of the handle simultaneously, and align the ring groove on the cable protector pipe end with the mounting groove on the release handle, then firmly push it until a "click" sound is heard, which indicates that the connection is completed.

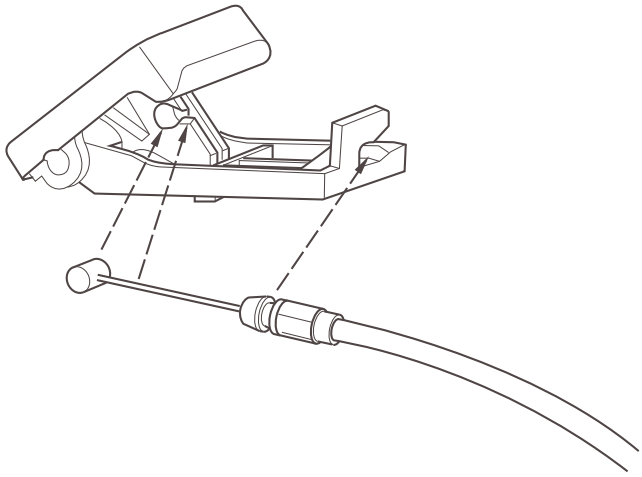

3. Connect the bonnet cable assembly and lock assembly firmly, i.e. fit the spherical end of the cable core wire into the hook slot of the bonnet lock, put the core wire into the long slot of the bonnet lock case, and align the circular groove of the main cable pipe connector with the mounting slot of the lock case, then press it hard until it clicks.
4. Fit the bonnet lock assembly.

Bonnet Lock Assembly Refit

5. Pull the release handle of the bonnet in the driver's compartment to inspect the opening effect of the bonnet.

www.cargeek.ir

www.cargeek.ir

Bonnet Open Handle Assembly

Remove

1. Pull up the bonnet open handle.
2. Remove 2 self-tapping screws fixing the bonnet open handle assembly to the instrument panel lower closing plate.

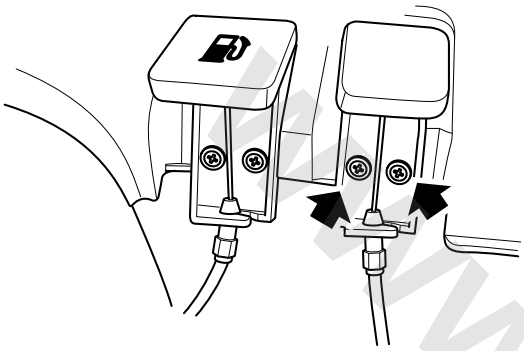

SC310004

3. Pull the bonnet release cable assembly out of the open handle to remove the release handle assembly.

Refit

1. Align the 2 circular mounting holes on the bonnet opener handle assembly base with the 2 mounting holes on the instrument panel, and align the quadrate salience with the quadrate hole on the instrument panel, and make the two fitting surfaces snug.
2. Secure the opener handle to the instrument panel with 2 self-tapping screws, the torque is **1.3–1.9Nm**, and check the torque.
3. Fit one side of the cable assembly column shape end to the bonnet opener handle assembly.

Fender Assembly

Remove

1. Remove the front bumper assembly.

Front Bumper Assembly Remove

2. Remove the head lamp assembly.

Head lamp Assembly Remove

3. Remove 3 screws of the front bumper bracket, and the remove the bracket.

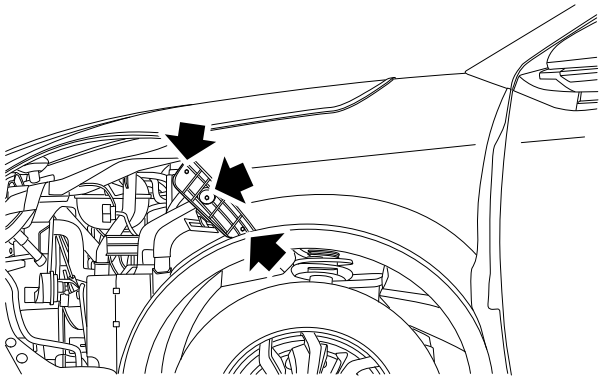

SC323001

4. Remove the front wheel house trim panel.

Front Wheel House Trim Panel Remove

5. Remove the pedal assembly.

Pedal Assembly Remove

6. Remove the acoustic pad of fender.
7. Remove the cover of the A/C air inlet grille panel.
8. Release 7 bolts and 1 nut connecting the fender and body to remove the fender.

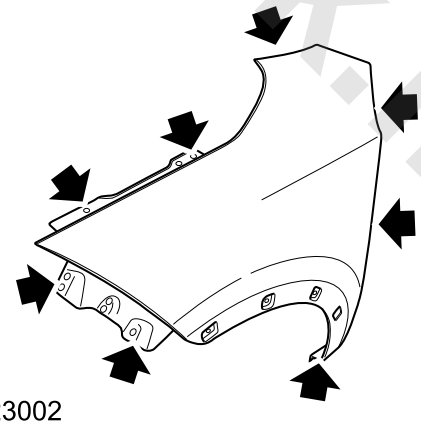

SC323002

Refit

1. Locate and adjust the fender.
2. Fix the fender to the body, do not secure the bolts.
3. Adjust the gap between the fender and adjacent panels and ensure uniform gap. Then tighten 7 bolts securing the fender and body to **7–10Nm** and check the torque. And tighten 1 nut fixing the fender to the body.

www.cargeek.ir

www.cargeek.ir

4. Fit the cover of the A/C air inlet grille panel.
5. Fit the acoustic pad of fender.
6. Fit the pedal assembly.

Pedal Assembly Refit

7. Fit the front wheel house trim panel.

Front Wheel House Trim Panel Refit

8. Fit the front bumper bracket.
9. Fit the headlamp assembly.

Headlamp Assembly Refit

10. Fit the front bumper assembly.

Front Bumper Assembly Refit

Upper Radiator Beam

Remove

1. Remove the front bumper assembly.

Front Bumper Assembly Remove

2. Remove the headlamp assembly.

Headlamp Assembly Remove

3. Release 3 split pins of the air filter inlet pipe, and remove the air filter inlet pipe.

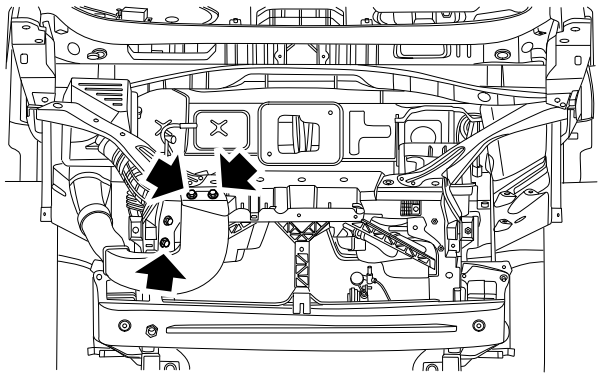

S5113001

4. Remove 2 bolts fixing the coolant expansion tank to the upper mounting panel of the left headlamp.

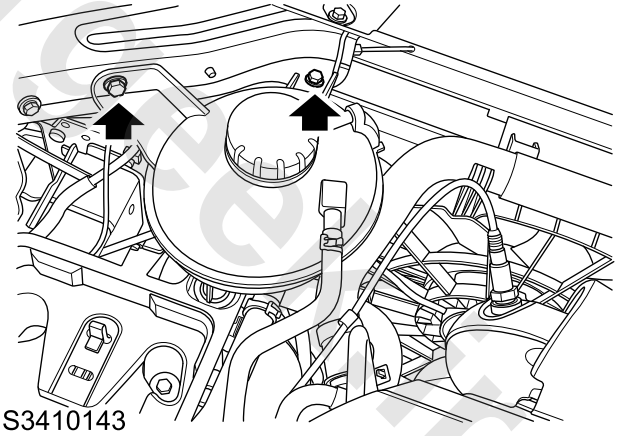

S3410143

5. Remove 1 bolt fixing the washer reservoir neck to the upper mounting panel of the left headlamp.

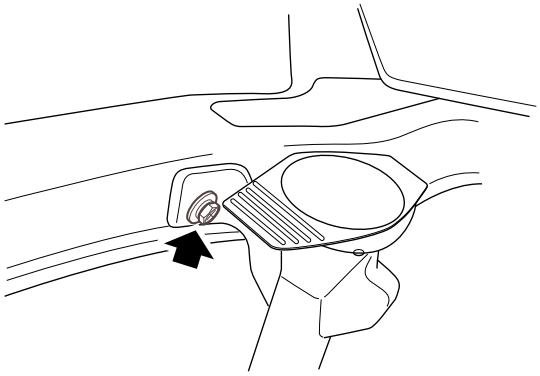

S6810003

www.cargeek.ir

www.cargeek.ir

6. Remove 2 bolts connecting the upper mounting panel of the left headlamp and the body and 3 bolts connecting the upper mounting panel of the left headlamp and the upper radiator beam, and remove the upper mounting panel of the left headlamp.

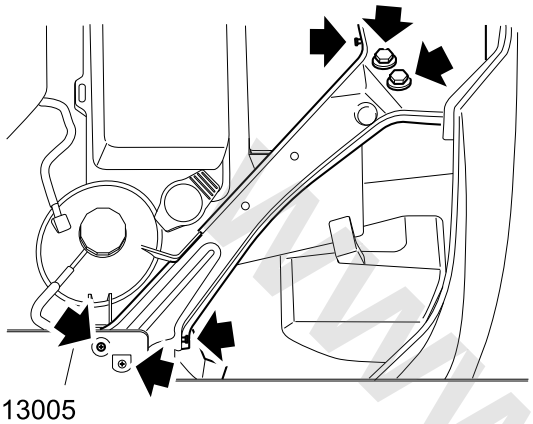

S5113005

7. Remove 2 bolts connecting the upper mounting panel of the right headlamp and the body and 3 bolts connecting the upper mounting panel of the right headlamp and the upper radiator beam, and remove the upper mounting panel of the right headlamp.
8. Release the clamp and disconnect the radiator inlet hose (3).
9. Release the clamp and disconnect the radiator outlet hose (2).
10. Prepare a proper container to collect the transmission fluid.
11. Disconnect the transmission fluid cooling pipe at the radiator side.
12. Disconnect the connector of the low-speed cooling fan resistance.
13. Disconnect 2 connectors of the front impact sensor in the upper radiator beam, and disconnect the clip fixing the harness of the front impact sensor to the upper radiator beam.

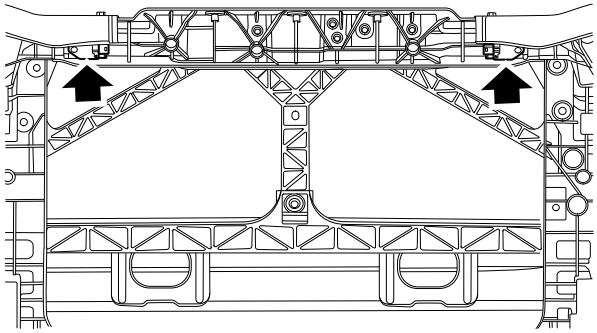

S5113003

14. Remove the engine cover lock assembly.

Engine Cover Lock Assembly Remove

15. Disconnect the connector of the ambient temperature sensor.
16. Remove 1 nut (2) securing the A/C hard pipe assembly (condenser) on the condenser.

Caution: Always fit plugs to open connections to prevent contamination.

17. Remove the nut (1) securing the A/C pipe (compressor/condenser) on the condenser.

Caution: Always fit plugs to open connections to prevent contamination.

18. Loosen the clamps and disconnect the air inlet hose from the intercooler.
19. Loosen the clamps and disconnect the air outlet hose from the intercooler (3).
20. Remove 6 bolts and 2 nuts connecting the front bumper assembly and the BIW, and remove the upper radiator beam and front bumper assembly.
21. Remove 2 bolts and 2 screws connecting the upper radiator beam, radiator and the intercooler.
22. Remove 5 screws connecting the upper radiator beam and front bumper assembly, and remove the upper radiator beam.

Refit

1. Connect the front bumper beam and upper radiator beam with screws, tighten the screw to **7–10Nm** and check the torque.
2. Fix the intercooler and radiator to the upper radiator beam, fit 2 bolts and screw, tighten to **4–6Nm** and check the torque.
3. Fit the front bumper beam and upper radiator beam to the body, connect them with bolts and nuts respectively, tighten to **40–50Nm** and check the torque.
4. Fit the intercooler air inlet hose to the intercooler, and fix it with clamps.
5. Connect the intercooler air inlet hose to the turbocharger, and fix it with clamps.
6. Secure the compressor exhaust hose to the condenser, fit 1 nut, tighten it to **19–25Nm**, and check the torque.
7. Secure the A/C hard pipe assembly (condenser) on the condenser, fit 1 nut, tighten to **19–25Nm** and check the torque.
8. Connect the connector of the ambient temperature sensor.
9. Fit the engine cover lock assembly.

Engine Cover Lock Assembly Refit

10. Connect the connector of the front impact sensor.

www.cargeek.ir

www.cargeek.ir

11. Connect the connector of the low-speed cooling fan resistance.
12. Fix the upper mounting panel of the right headlamp to the upper radiator beam and body, tighten 2 bolts connecting the upper mounting panel of the right headlamp and the body to **7–10Nm**, tighten 3 bolts connecting the upper mounting panel of the right headlamp and the upper radiator beam to **7–10Nm** and check the torque.
13. Fix the upper mounting panel of the left headlamp to the upper radiator beam and body, tighten 2 bolts connecting the upper mounting panel of the left headlamp and the body to **7–10Nm**, tighten 3 bolts connecting the upper mounting panel of the left headlamp and the upper radiator beam to **7–10Nm** and check the torque.
14. Fix the washer reservior bolt to the upper mounting panel of the left headlamp, tighten the bolt to **4–6Nm** and check the torque.
15. Secure the coolant expansion tank on the frame, fit 2 bolts, and tighten to **4–6Nm**.
16. Fit the air filter inlet pipe.
17. Fit the headlamp assembly.

☞ Headlamp Assembly Refit

18. Fit the front bumper.

☞ Front Bumper Refit

Battery Tray

Remove

1. Disconnect the battery negative and positive.
2. Remove 2 battery plate nuts, and remove the battery plate.

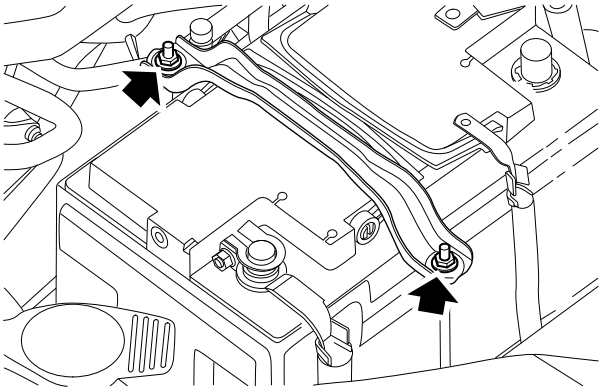

S8423001

3. Remove the battery sleeve.
4. Remove the battery assembly.
5. Remove 4 battery tray bolts, and remove the battery tray.

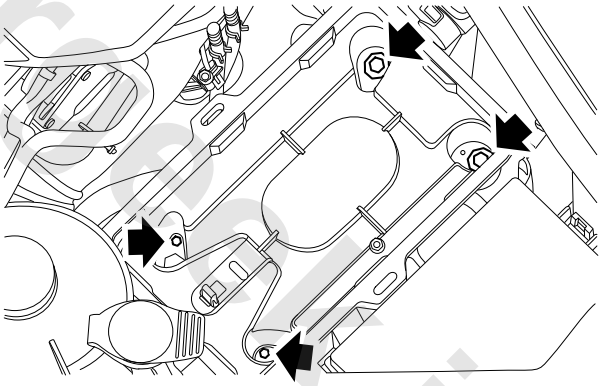

S8423002

Refit

1. Fit the battery tray, tighten 4 battery tray bolts to **19–25Nm** and check the torque.
2. Fit the battery sleeve.
3. Fit the battery assembly.
4. Fit the battery plate, tighten 2 battery plate nuts to **3–5Nm** and check the torque.
5. Connect the battery positive and negative.

www.cargeek.ir

www.cargeek.ir

Rear Closures

Specifications

Torque

Description	Value
Bolt - Fuel filler door to body	7–10Nm
Screw - hood open handle	1.3–1.9Nm
Bolt - tailgate hinge to body	8–12Nm
Bolt - tailgate latch to tailgate	19–25Nm
Bolt - tailgate striker to tailgate sill	19–25Nm
Nut - tailgate hinge to body	26–34Nm
Spigot-gas strut - spigot gas strut to welding nut	20–29Nm

www.cargeek.ir

www.cargeek.ir

www.cargeek.ir

Service Procedures

Fuel Filler Door Assembly

Remove

1. Pull up the open handle of the fuel filler door under the driver side instrument panel assembly to open the fuel filler door.
2. Release the fuel filler cap connecting wire from fuel filler door, as shown in figure 1.
3. Remove 2 bumper blocks from fuel filler door.
4. Unscrew 2 bolts connecting the fuel filler door to the body, as shown in figure 2, and remove the fuel filler door assembly.

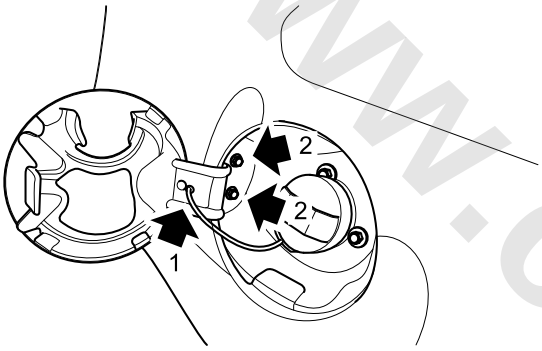

S532001

Refit

1. Locate the fuel filler door to the body, take care to adjust the gap around the fuel filler door to avoid the interference with side panel.
2. Refit the bolt, tighten to **7–10Nm**, and check the torque.
3. Fit the fuel filler door bumper block.
4. Stuck the fuel filler cap connecting wire into the fuel filler door, and close fuel filler door.

Fuel Filler Door Release Cable Assembly

Remove

1. Pull up the open handle of the fuel filler door on the panel under the driver side instrument panel, and open the fuel filler door.
2. Release the cable assembly of the fuel filler door from the open handle of the fuel filler door (see the arrow).

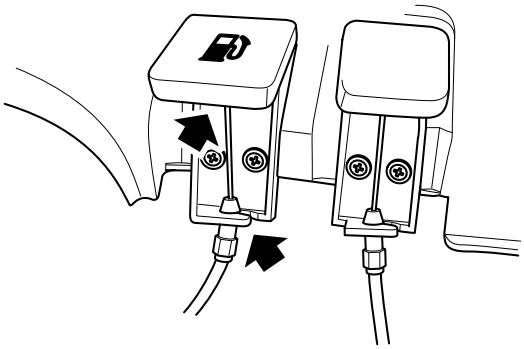

S5320004

3. Remove the lower trim panel of the left C pillar.
4. Remove the sill trim panel of the left rear door.
5. Remove the lower trim panel of the left B pillar.
6. Remove the sill trim panel of the left front door.
7. Remove the lower trim panel of the left A pillar.
8. Lift the carpet at the left side to expose the cable assembly, and release the cable from the clips of the electrical harness.

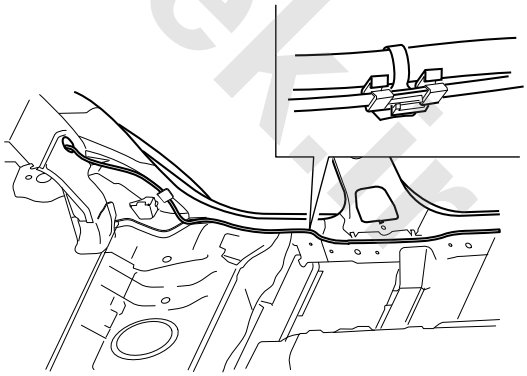

S5320003

9. Disconnect the cable from the body, and draw the whole release cable assembly of the fuel filler door from the fuel filler door.

www.cargeek.ir

www.cargeek.ir

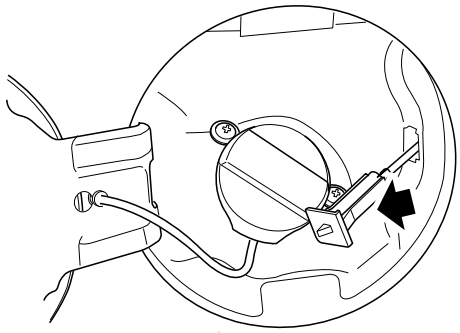

S5320002

Refit

1. Fit the small end of the release cable assembly to the luggage compartment through the hole of the side panel, push the shutter into the hole along the hole axis till it clicks and clips at both sides of the shutter are completely stuck into the side panel.
2. Fit the cable assembly to the rear compartment through the left luggage compartment, and fix the cable to the clip of the electrical harness (near the instrument panel) along the left door sill, then fit the cylindrical end of the cable assembly into the notch of the handle under the instrument panel.
3. Pull the fuel filler door open handle on the panel under the instrument panel assembly at the driver side, check the connections of the release cable assembly.
4. Arrange the carpet at the left compartment.
5. Fit the lower trim panel of the left A pillar.
6. Fit the trim panel of the left front door sill.
7. Fit the B pillar lower trim panel.
8. Fit the trim panel of the left rear door sill.
9. Fit the lower trim panel of the left C pillar.
10. Close the fuel filler door.

Fuel Filler Door Open Handle

Remove

1. Pull the fuel filler door open handle.
2. Remove 2 self-tapping screws fixing the fuel filler flap open handle assembly to the instrument panel lower closing plate.

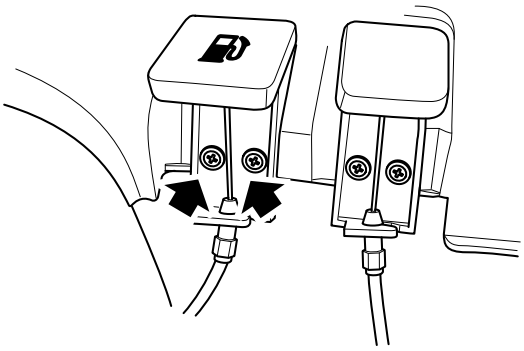

S5320005

3. Release the fuel filler door release cable from the open handle to remove the fuel filler door open handle assembly.

Refit

1. Insert the cylindrical end of the fuel filler door release cable assembly into the cylindrical hole of the open handle, place the core wire into the long slot of the handle, and align the cable pipe connector with the mounting slot of the open handle, then press it hard until it clicks.
2. Align the two round mounting holes on the base of the fuel filler door open handle assembly with the two mounting holes on the lower closure plate of the instrument panel, and align the square protrusion of the base with the square hole on the lower closure plate of the instrument panel. The two mounting surfaces shall fit.
3. Fit 2 self-tapping screws fixing the open handle of the fuel filler door to the instrument panel, tighten the screw to **1.3–1.9Nm**, and check the torque.

www.cargeek.ir

www.cargeek.ir

Tail Gate Assembly

Remove

1. Open the tail gate, and disconnect the battery negative.
2. Open the tail gate.
3. Remove the tail gate lower trim panel.

Tail Gate Lower Trim Panel Remove

4. Disconnect the harness connector of the rear window wiper motor.
5. Disconnect the tail gate lock connector.
6. If it is required to refit the tail gate, a reference position shall be marked on the hinge.
7. Release the interface of the resistance heater wires at both sides of the tail gate window.
8. As indicated by the arrow, release the harness sheath at both sides of the tail gate, draw the electrical harness from the tail gate cavity.

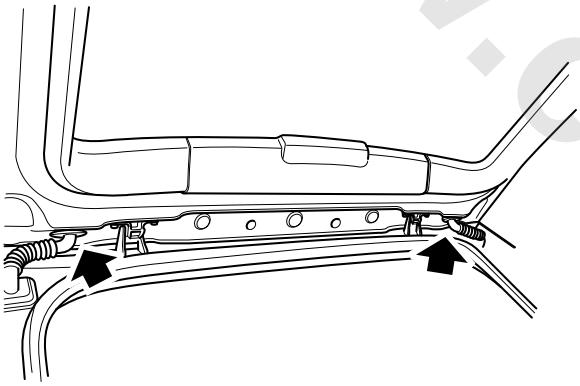

SC21002

9. With assistance, remove 4 bolts fixing the hinges to the tail gate on both sides.

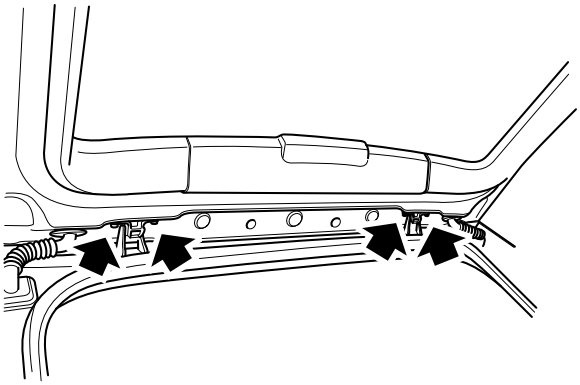

SC210003

Warning: As the large weight of the tailgate, operations should be performed after the safety feature is set, and take extra care to prevent the vehicle from damaging and personal injury.

10. With assistance, carefully pry the clips of the gas spring pistons at both sides of the tail gate, pull out the ball head socket of the piston from the ball head of the tail gate, and remove the tail gate assembly.

Warning: As the large weight of the tailgate, operations should be performed after the safety feature is set, and take extra care to prevent the vehicle from damaging and personal injury.

11. Remove the lock assembly from the tail gate assembly.

Tail Gate Lock Remove

12. Remove the rear wiper motor.

Rear Wiper Motor Remove

Refit

1. Locate the tail gate to the body with assistance, and align it with the marked position.
2. Fit the bolt fixing the tail gate hinge to the tail gate, but do not tighten it to the specified torque.

Warning: As the large weight of the tailgate, operations should be performed after the safety feature is set, and take extra care to prevent the vehicle from damaging and personal injury.

3. Press the ball head socket of the gas spring pistons at both sides into the ball head of the tail gate side panel till it clicks. Fit the steel piece.

Caution: Oil seals are waxed and must not be lubricated prior to fitting.

4. Fit the electrical harness into the tail gate cavity, and connect the interface of the resistance heater wires at both sides of the windshield.
5. Fit the tail gate lock assembly.

Tail Gate Lock Assembly Refit

6. Connect the harness connector of the tail gate lock.
7. Fit the rear wiper motor and its connector.

Rear Wiper Motor Refit

8. Check and adjust the clearance and surface distance between the tail gate and the side body panel/back panel. After adjustment, tighten the bolt to **8–12Nm**, and check the torque.
9. Fit the tail gate trim panel.

Tail Gate Trim Panel Refit

10. Connect the battery negative.

www.cargeek.ir

www.cargeek.ir

Tail Gate Lock Assembly

Remove

1. Open the tail gate, and disconnect the battery negative.
2. Remove the lower trim panel assembly of the tail gate.

☞ **Tail Gate Trim Panel Remove**

3. Remove 3 bolts fixing the tail gate lock to the tail gate.

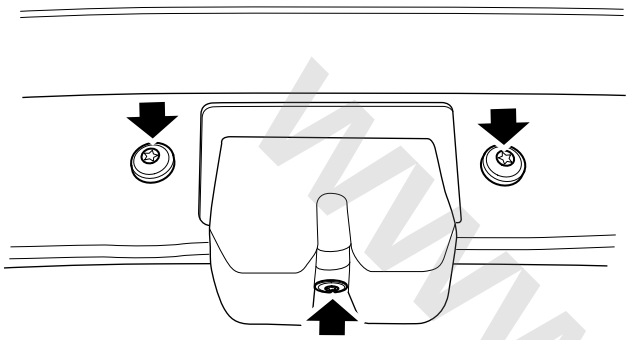

SC210004

4. Remove the tail gate lock sleeve.
5. Release the clip fixing the tail gate emergency cable to the inner panel of the tail gate.
6. Disconnect the harness connector of the lock.

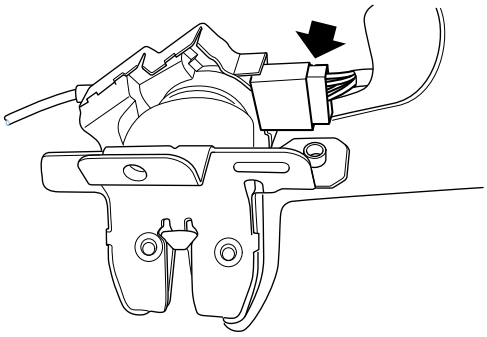

SC210006

7. Remove the tail gate lock.
8. Release the tail gate emergency cable from the tail gate lock.

Refit

1. Fit the emergency cable of the tail gate to the tail gate lock.
2. Locate the tail gate lock to the tail gate panel through the tail gate cavity.
3. Connect the harness connector.
4. Hold the end of the tail gate emergency cable, pass it through the through hole of the tail gate inner panel, and fit the connector.
5. Fit 3 bolts fixing the tail gate lock to the tail gate, but do not tighten the bolts.
6. Check and adjust the fit clearance and the surface distance between the tail gate lock and the surrounding panels, then tighten the lock bolt to **19–25Nm**, and check the torque.
7. Push the tail gate lock sleeve into the lock until it clicks.
8. Fit the lower trim panel of the tail gate.

☞ **Tail Gate Trim Panel Refit**

9. Close the tail gate.
10. Connect the battery negative.

www.cargeek.ir

www.cargeek.ir

www.cargeek.ir

Tail Gate Striker

Remove

1. Open the tail gate.
2. Remove the tail gate sill trim panel.

Tail Gate Sill Trim Panel Remove

3. Mark the tail gate position relative to the back panel.
4. Remove 2 screws fixing the tail gate striker to the rear panel.

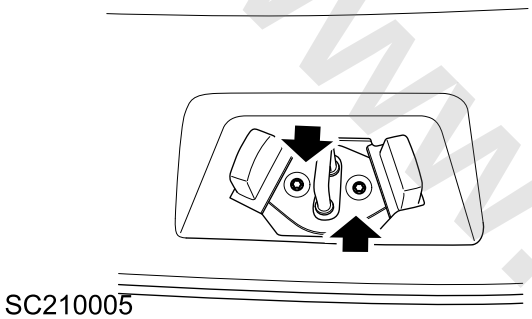

5. Remove the tail gate striker.
6.

Refit

1. Pre-fit the tail gate striker according to the scale of the tail gate striker and body.
2. Open/close the tail gate repeatedly, and adjust the fit clearance and surface difference between the tail gate and the surrounding panels by moving the striker.
3. Make sure that the tail gate lock is fully locked, and check if the electrical signal of the tail gate lock is correct.
4. Tighten the bolt securing the striker to the body to **19–25Nm**, and check the torque.
5. Fit the tail gate sill trim panel.

Tail Gate Sill Trim Panel Refit

Tail Gate Hinge Assembly

Remove

1. Open the tail gate.
2. Remove the tail gate assembly.

Tail Gate Assembly Remove

3. Mark the position of the tail gate hinge on the vehicle body with a non-permanent marker.
4. Remove the roof interior.

Roof Interior Remove

5. Remove the nut fixing the hinge assembly to the body (the hinge bolt indicated corresponds to the nut fitted from the inside of the body), and remove the tail gate hinge assembly.

Warning: As the large weight of the tailgate, operations should be performed after the safety feature is set, and take extra care to prevent the vehicle from damaging and personal injury.

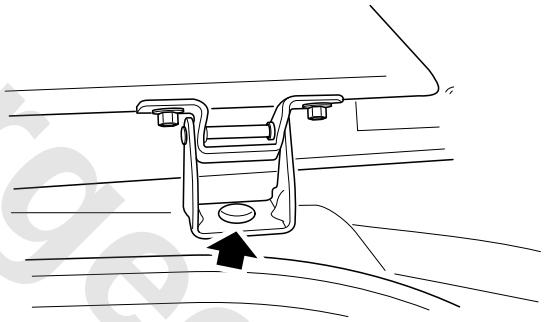

6. Remove the tail gate hinge assembly.

Refit

1. Locate the tail gate hinge assembly to the marked mounting position on the body.
2. Fit the nut fixing the tail gate hinge to the body, tighten the nut to **26–34Nm**, and check the torque.
3. Fit the roof interior.

Roof Interior Refit

4. Fit the tail gate assembly.

Tail Gate Assembly Refit

5. Close the tail gate, and check if the fit clearance and surface difference between the side body panel and the back panel meet the DTS (dimension technical specification) requirements.

www.cargeek.ir

www.cargeek.ir

Tail Gate Air Spring and Mounting Ball Head

Remove

1. Open the tail gate, and when removing the tail gate, make sure it is securely supported.

Warning: As the large weight of the tailgate, operations should be performed after the safety feature is set, and take extra care to prevent the vehicle from damaging and personal injury.

2. Carefully unclench retaining clip at piston end of the left gas spring, forcibly unplug ball cup at piston end from ball head of end door.
3. Then forcibly unplug ball cup at socket end of gas spring from ball head of small wall bracket at the left side of vehicle body.
4. Repeat step 2-3 to remove the right gas spring.
5. Finally, remove the gas spring ball heads from the tail gate inner panel and body side brackets respectively.

Refit

1. Align the gas spring ball head with the through hole of the left gas spring bracket and the left through hole of the tail gate inner panel.
2. Tighten the gas spring ball head to **20–29Nm**, and check the torque.
3. Align the ball head socket on the gas spring sleeve with the ball head on the left bracket, and make sure the gas spring piston is downward.
4. Hold the sleeve, push the ball head socket into the ball head with thumb, if the two parts are fitted well, a "crack" sound will be heard.

Caution: To avoid damaging the airtightness of the air spring, never hold the centre of the air spring and laterally apply force to it by hand.

5. Align the ball head socket on the left gas spring piston with the ball head on the tail gate inner panel. Hold the end of the piston, push the ball head socket into the ball head with thumb, if the two parts are fitted well, a "crack" sound will be heard.
6. Check the steel spring piece on both ball head sockets of the gas spring, and ensure it is properly located in the spring piece slot.
7. Repeat step 1-6, fit the right gas spring of the tail gate.

www.cargeek.ir

www.cargeek.ir

www.cargeek.ir

Horn

Specifications

Torque

Description	Value
Bolt-A	7–10Nm

www.cargeek.ir

www.cargeek.ir

www.cargeek.ir

Service Procedures

Horn

Remove

1. Disconnect the battery negative.
2. Remove the front bumper.
   ☞ **Front Bumper Remove**
3. Disconnect the connector (1) of tweeter/woofer.
4. Remove the bolt (2) securing the tweeter/woofer to the front wheelhouse front connector.

Refit

1. Fix the horn to the front connector of front wheelhouse, fit 1 bolt, tighten to **7–10Nm** and check the torque.
2. Connect the connector of the horn.
3. Refit the front bumper.
   ☞ **Front Bumper Refit**
4. Connect the battery negative.

www.cargeek.ir

www.cargeek.ir

www.cargeek.ir

Body Control Module

Specifications

Torque

Description	Value
Screw-A	5–7Nm

www.cargeek.ir

www.cargeek.ir

www.cargeek.ir

Description and Operation

System Layout

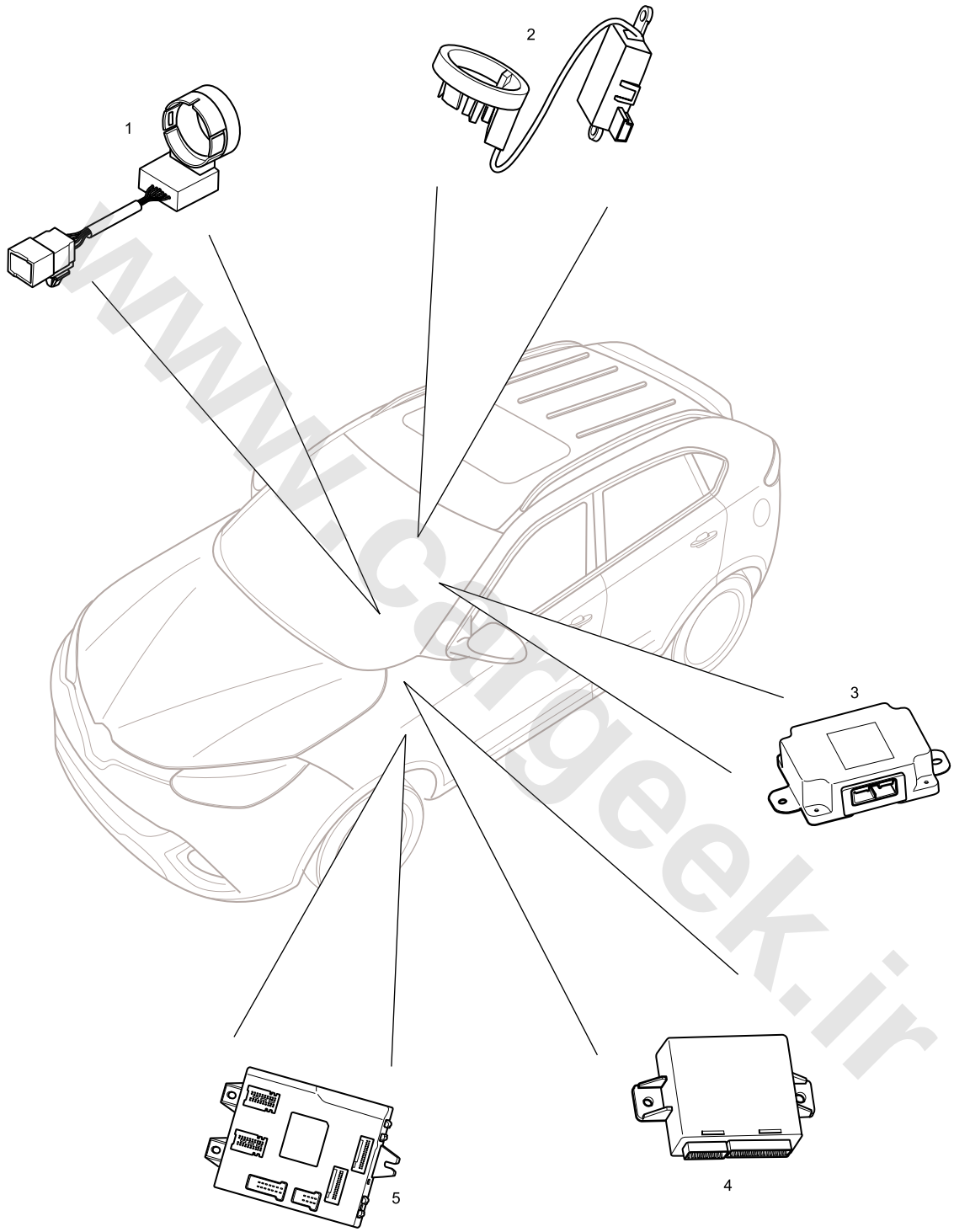

S8360001

1. LF Anti-theft Coil (if any)
2. Spare Coil (if any)
3. PMDC Module
4. GW Module
5. **BCM**

www.cargeek.ir

www.cargeek.ir

System Control Diagram

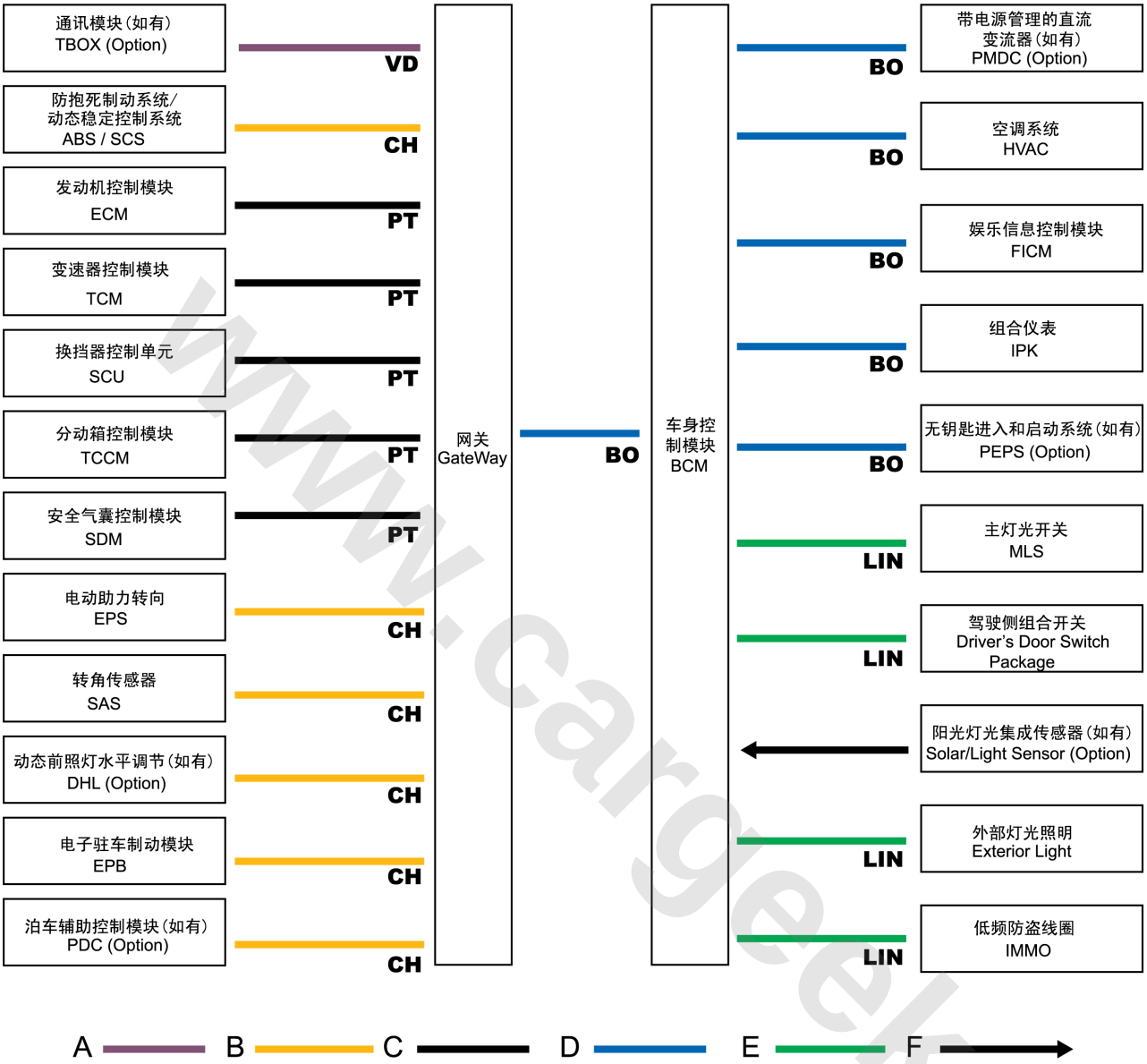

S8361001

www.cargeek.ir

www.cargeek.ir

Description

Mounting position:

BCM is on the left front panel of the A pillar.

The **BCM** consists of the low power microprocessor, **EEPROM**, **CAN**, **LIN** transceiver and power supply. The **BCM** contains discrete input/output terminals which controls most of the body functions. It interacts with other primary electrical systems through the HS **CAN** bus and with other secondary electrical systems through the **LIN** bus. The PMM of the **BCM** provides power for most of the vehicle electric components.

The **BCM** communicates with the following components via the HS **CAN** bus:

- PMDC (DC converter with the power management) (2.0T only)
- **ACM** (A/C)
- FICM (entertainment system)
- **IPK** (IPK)
- PEPS (PEPS module)
- GATEWAY

The body control module communicates with the following parts through the **LIN** bus:

- IMMO (low frequency immobilizer coil)
- **MLS** (Master Light Switch)
- **DDSP** (driver side combination switch)
- PWL (power window regulator motor)
- ALT (alternator)

BCMEnd View and Pin Information of Harness Connector BY084

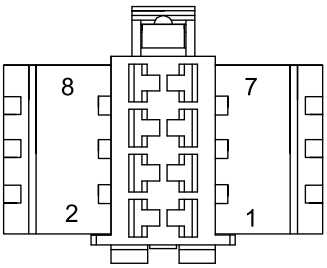

Pin No.	Description
1	KL.30
2	Right Low Beam Output
3	—
4	KL.30
5	Ground
6	KL.30
7	Daytime Running Lamp Output
8	—

BCMEnd View and Pin Information of Harness Connector BY085

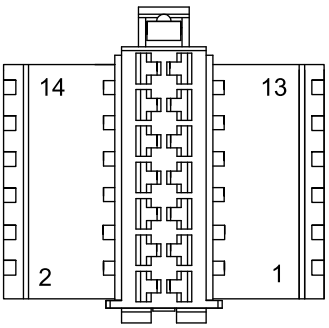

Pin No.	Description
1	KL.30
2	—
3	—
4	Left Low Beam Output
5	Ground
6	Unlock Output
7	—
8	Ground
9	KL.30
10	Driver Door Unlock Output
11	KL.30
12	Luggage Compartment Unlock Output
13	Driver Door Lock Output
14	—

www.cargeek.ir

www.cargeek.ir

BCMEnd View and Pin Information of Harness Connector BY086

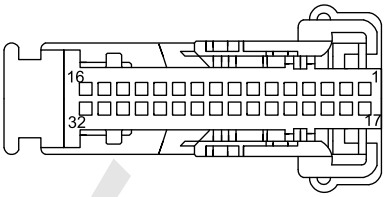

Pin No.	Description
1	Front Wiper Stop Position Feedback
2	—
3	KL.15 Relay Coil Output
4	Starter Relay Coil Output (stop/start only)
5	Horn Relay Coil Output
6	—
7	—
8	—
9	Heated Rear Window Output
10	Relay Coil Output of Rear Window Washer Pump
11	Relay Coil Output of Windshield Washer Pump
12	Relay Coil Output of Rear Wiper Motor
13	Speed Relay Coil Output of Front Wiper Motor
14	Enable Relay Coil Output of Front Wiper Motor
15	Relay Coil Output of Front Fog Lamp
16	Relay Coil Output of High Beam
17	High Side Driver Output
18	—
19	Engine Hood Input
20	—
21	—
22	—
23	—
24	—
25	—
26	—
27	—
28	—
29	—
30	—
31	Left Position Lamp Output
32	Right Position Lamp Output

BCMEnd View and Pin Information of Harness Connector BY087

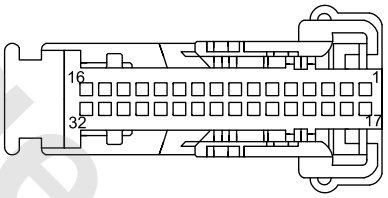

Pin No.	Description
1	Left Front Window Up Output
2	Left Front Window Down Output
3	Right Front Window Up Output
4	Right Front Window Down Output
5	Right Rear Window Up Output
6	Right Rear Window Down Output
7	Left Rear Window Up Output

www.cargeek.ir

www.cargeek.ir

8	Left Rear Window Down Output
9	—
10	High-mounted Stop Lamp Output
11	License Plate Lamp Output
12	Interior Roof Lamp PWM Output
13	Right Rear Position Lamp A Output
14	Left Rear Position Lamp A Output
15	—
16	—
17	—
18	—
19	—
20	—
21	—
22	Right Brake Lamp Output
23	Right Rear Direction Indicator Lamp/Right Width Lamp Output
24	Right Front Direction Indicator Output
25	Right Position Lamp Output
26	Reverse Lamp Output
27	Left Brake Lamp Output
28	Rear Fog Lamp Output
29	Left Position Lamp Output
30	Left Front Direction Indicator Lamp Output
31	Left Rear Direction Indicator Lamp/Left Width Lamp Output
32	Interior Roof Lamp Delay Relay Output

BCMEnd View and Pin Information of Harness Connector BY088

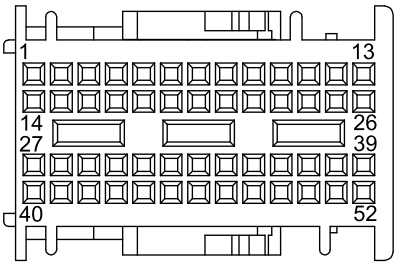

Pin No.	Description
1	—
2	—
3	—
4	—
5	Backlight Regulator IP Output
6	Backlight Regulator BD Output
7	—
8	—
9	P Gear Lock Output
10	Luggage Compartment Lamp Output
11	—
12	—
13	—
14	—
15	—
16	Left Rear Window Down Switch Input
17	Clutch Switch Input (6-speed MT)
18	Left Rear Window Auto Switch Input
19	Left Rear Window Up Switch Input
20	N Gear Switch Input (6-speed MT)
21	—

www.cargeek.ir

www.cargeek.ir

22	Left Rear Door Status Input
23	Luggage Compartment Lid Status Input
24	Right Rear Window Down Switch Input
25	**LIN**5
26	—
27	Right Front Window Auto Switch Input
28	—
29	Right Rear Window Auto Switch Input
30	Right Rear Window Up Switch Input
31	Right Front Window Down Switch Input
32	Right Front Window Up Switch Input
33	Right Rear Door Status Switch Input
34	Right Front Door Status Switch Input
35	Driver Door Lock Input
36	—
37	—
38	—
39	**LIN**1
40	—
41	Luggage Compartment Release Switch Input
42	Left Front Door Status Switch Input
43	Driver Door Unlock Input
44	—
45	—
46	Washer Fluid Level Alarm Input
47	—
48	—
49	Rear Wiper Motor Stop Switch Input
50	Brake Pedal Switch Input (6-speed MT)
51	Body HS **CAN** High
52	Body HS **CAN** Low

BCMEnd View and Pin Information of Harness Connector FA026

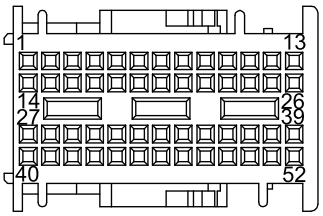

Pin No.	Description
1	Sunroof Lazy Lock Input
2	Stop/Start Disable Indicator
3	—
4	—
5	Lock Signal Input of Upper Center Console Switch
6	—
7	—
8	Direction Indicator Lamp Switch Input
9	—
10	Private LIN
11	—
12	—
13	Unlock Signal Input of Upper Center Console Switch
14	Headlamp Washer Output
15	Rear Window Heater Indicator Output (MTC)
16	—
17	—
18	—
19	—
20	Hazard Warning Lamp Switch Input

www.cargeek.ir

www.cargeek.ir

21	—
22	Lamp Sensor Ground
23	—
24	—
25	KL.15
26	Indicator Output of One-button Control ACC Gear
27	Ground
28	—
29	Normally On Switch Input (when high beam flashes)
30	—
31	—
32	—
33	Rear Window Heater Switch Input (MTC)
34	—
35	DISABLE Input of Intelligent Stop/Start Energy Saving System Switch
36	—

37	Indicator Output of One-button Control ST/RUN Gear
38	Lamp Sensor Request Signal
39	—
40	Rear Washer Switch Input
41	Front Wiper Switch Input 2
42	Front Wiper Intermittent Switch Input
43	Rear Wiper Switch Input
44	Front Washer Switch Input
45	One-button Start Switch Input
46	—
47	Front Wiper Switch Input 1
48	Horn Switch Input
49	Indicator Output of Center Console Lock Switch
50	Lamp Sensor Power
51	ACC Wake-up Signal
52	—

www.cargeek.ir

www.cargeek.ir

www.cargeek.ir

Operation

Overview

When the ignition switch is enabled, the **BCM** will wake up the security system, lighting system and diagnostic system. When the ignition switch is in the "**AUX**" position, the **BCM** allows the washer/wiper and power window system to operate. When the ignition switch is in the "IGN" position, the fuel system starts to work, and the **BCM** communicates with other **ECU**s through the **CAN** and **LIN** bus.

Load Management

The **BCM** can manage the load of some electric appliances by configuration and ensure low battery power consumption during storage and transportation or idle time.

Production Mode

It is configured for the **BCM** during vehicle assembly.

Transportation Mode

After vehicle assembly, programme the **BCM** so that the transportation mode can be used during transportation and low battery problem can be avoided when the factory delivers the vehicle to the authorized local after-sales service center. This mode may restrict the function of some electric appliances:

- The rear fog lamp does not work when the engine is off.
- The front fog lamp (if fitted) does not work when the engine is off.
- The high beam headlamp does not work when the engine is off.
- The low beam headlamp does not work when the engine is off.
- The reverse lamp does not work when the engine is off.
- The park lamp does not work when the engine is off.
- The direction indicator lamp does not work when the engine is off.
- The daytime running lamp (if fitted) does not work when the engine is off.
- The auto lamp control (if fitted) does not work when the engine is off.
- Follow Me Home and Vehicle Locating cannot be used.
- If the engine is disabled, the hazard warning lamp backlight does not work, but the function of this lamp is not affected.
- When the engine is disabled, the window can be ascended, but cannot be descended.

With the aftermarket diagnostic tool, the authorized local after-sales service center can shift the vehicle load management configuration from transportation mode to normal mode.

Normal Mode

This mode applies the default setting, after completion of the PDI, the vehicle can enter into normal operation.

Sleep Mode

With the ignition switch off, and the **CAN** and **LIN** buses disabled, if the battery is still connected, the **BCM** will stay in sleep mode and be prepared for receiving the signal from the **CAN** and **LIN** buses.

Wake-up Mode

In sleep mode, when one of the following operations is done, the **BCM** will be waked up.

- Activation signal of hazard warning lamp switch is received.
- Activation signal of direction indicator lamp switch is received.
- LOCK signal of internal lock is received.
- UNLOCK signal of internal lock is received.
- Activation signal of driver door switch is received.
- Activation signal of passenger door switch is received.
- Activation signal of engine cover switch is received.
- Activation signal of tail gate switch is received.
- Activation signal of tail gate release switch is received.
- Activation signal of driver door lock switch is received.
- Activation signal of driver door unlock switch is received.
- The ignition switch is in the 1st gear.
- The ignition switch is in the 2nd gear.
- Signal of depressing brake pedal
- SSB Data (PEPS)
- Activation signal of internal lamp switch
- Wake-up signal from **LIN** line
- Wake-up signal from **CAN** line
- Wake-up signal from local hard wire
- Valid radiofrequency signal

Load Management

To meet the demand of the starter motor for high current during engine start, some electric appliances shall be powered off. For example, disconnect the **HRW** and DISABLE switch of the intelligent stop/start energy saving system, and power off the front fog lamp (if fitted), high beam headlamp, reverse lamp, horn, interior lamp, etc. After the engine is started, reactivate each electric appliance to limit the current consumption of the battery.

www.cargeek.ir

www.cargeek.ir

Diagnosis

BCM monitors information input and output, if any fault is detected, the corresponding DTC will be stored in the fault records. The **BCM** can detect short and open circuits as well as wrong signals of the **CAN** and **LIN** buses. When any fault is detected, the **BCM** will close the corresponding functions. When the fault is eliminated, the corresponding function will be activated next time when the activation request is received.

The **BCM** can exchange information with the aftermarket diagnostic tool through the diagnostic socket. It is on the closure panel of the driver side instrument panel (driver's leg) and is made according to the **ISO** standards. There is a special diagnostic bus between the GW and the TBOX, the diagnostic bus allows use of the scan tool to read diagnostic information and programme some functions.

www.cargeek.ir

www.cargeek.ir

www.cargeek.ir

Service Procedures

Body Control Module (BCM)

Remove

1. Disconnect the battery negative.
2. Remove the lower closure plate of the driver side instrument panel.
   ☞**Driver Side Instrument Panel Lower Closure Plate Remove**
3. Disconnect the **BCM** connector (1).
4. Remove 3 screws (2) fixing the **BCM** to the right front body panel.

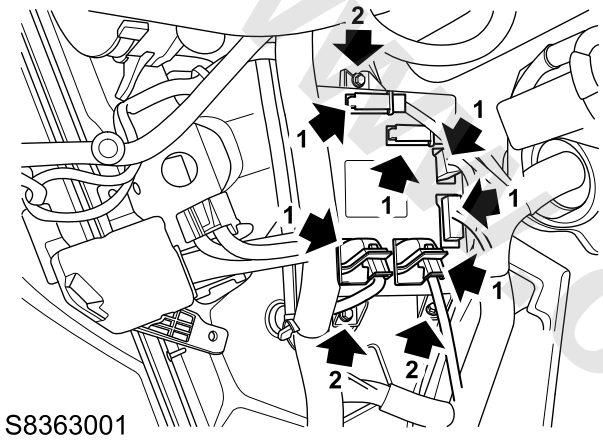

5. Remove the **BCM**.

Refit

1. Connect the connector of the **BCM**.
2. Connect the battery negative.
3. Programme and code the **BCM**.

☞**Self-learning and Adjustment, Programming and Coding - BCM Replacement**

4. Fix the **BCM** to the left front body panel, fit 3 screws, tighten to **5–7Nm** and check the torque.
5. Fit the lower closure plate of the driver side instrument panel.
   ☞**Driver Side Instrument Panel Lower Closure Plate Refit**

www.cargeek.ir

www.cargeek.ir

PMDC

Specifications

Torque

Description	Value
Blot-A	7–10Nm

www.cargeek.ir

www.cargeek.ir

www.cargeek.ir

Description and Operation

System Layout

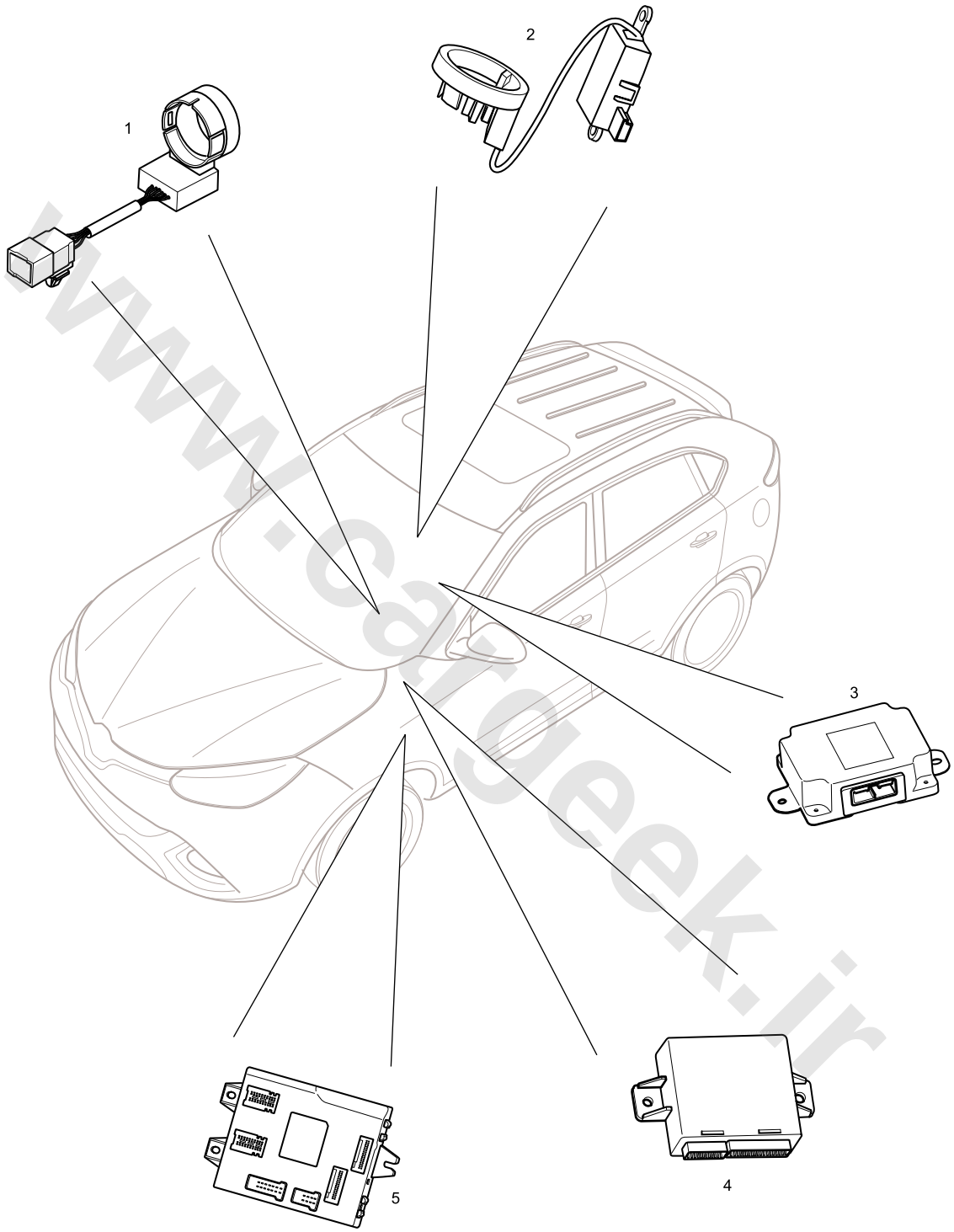

S8360001

1. LF Anti-theft Coil (if any)
2. Spare Coil (if any)
3. PMDC Module
4. GW Module
5. **BCM**

www.cargeek.ir

www.cargeek.ir

System Control Diagram

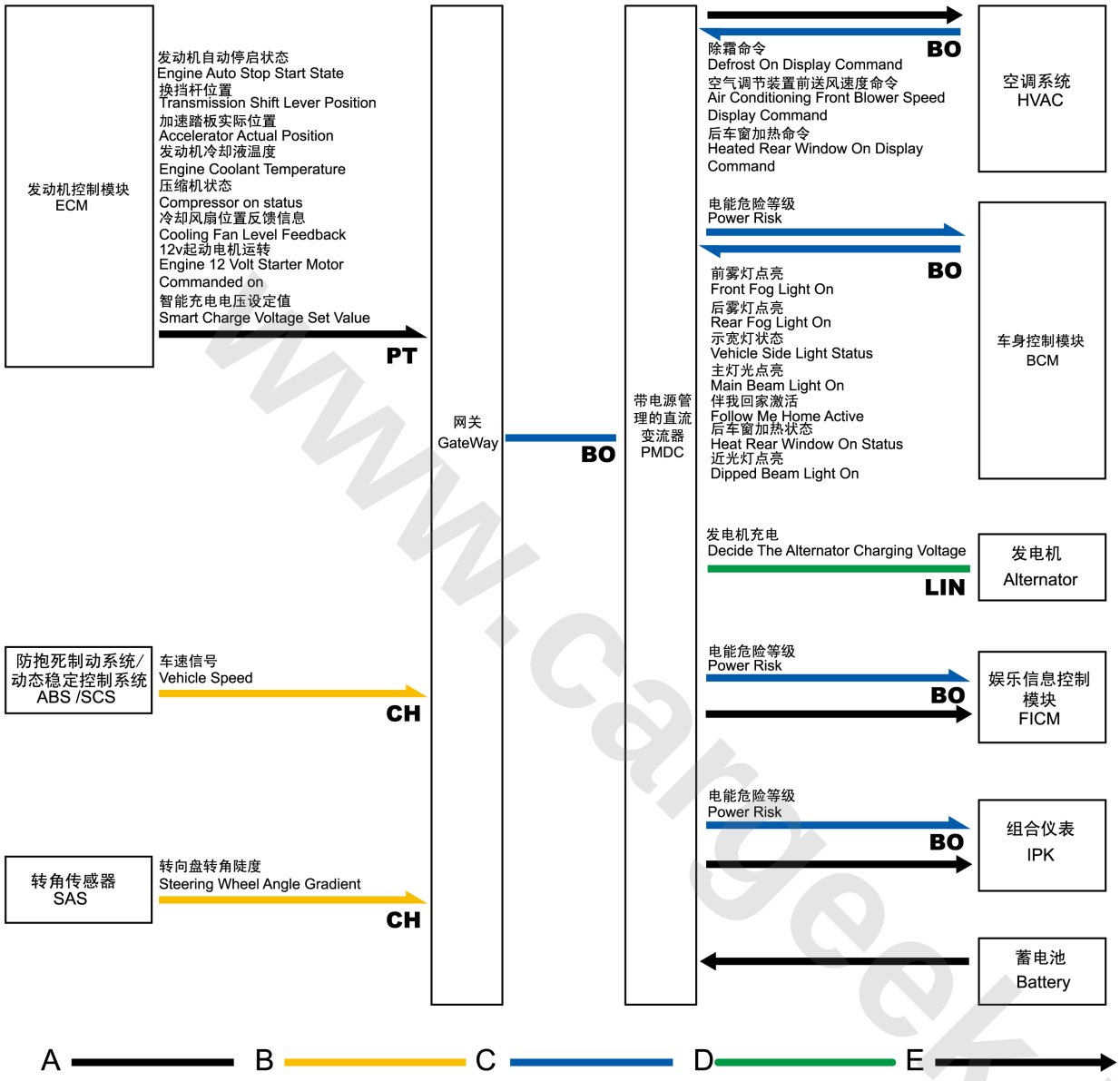

S8431001

www.cargeek.ir

www.cargeek.ir

Description

Mounting position

The PMDC module is under the driver seat (below the carpet), which performs power management and DC conversion.

End View and Pin Information of PMDC Harness Connector BY031

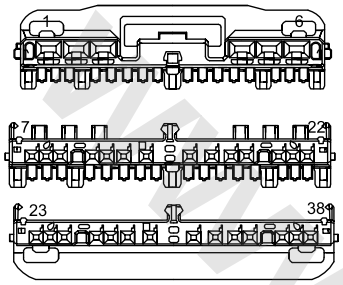

Pin No.	Description
1	Output Voltage 1
2	Output Voltage 2
3	**DC-DC** Power Input 2
4	**DC-DC** Power Input 1
5	**DC-DC** Ground 2
6	**DC-DC** Ground 1
7	Body HS **CAN** Low
8	Body HS **CAN** High
9	—
10	**LIN** Bus
11	—
12	Current Sensor Power
13	—
14	Current Sensor Ground
15	Battery -
16	—
17	KL.15
18	—
19	KL.50
20	—
21	—
22	—
23	Power Management Module (PMG) Ground
24	—
25	—
26	—
27	Power Management Module (PMB) Power
28	—
29	Current Signal
30	—
31	—
32	Battery +
33	—
34	—
35	—
36	—
37	—
38	—

www.cargeek.ir

www.cargeek.ir

www.cargeek.ir

Operation

Function

Power Management

- Battery status detection: this function detects real-time battery status and collects information involving the voltage, current and temperature of the battery. After the vehicle is locked, it can determine battery status by the self wake-up signal of less than 1s every hour. If high power consumption is detected, the PMDC will continue detecting the discharge current of the battery. After the vehicle is unlocked, the PMDC reports the battery status and acquires vehicle working condition by the **CAN**, and it also communicates with the **LIN** bus of the alternator and has it prepared for starting. During start, the PMDC continues detecting the action of the battery. To ensure quick response, the PMDC will enter into the specific start detection mode when the start signal is valid.
- Intelligent charge control: it can improve charge efficiency by calculating the charge voltage of the alternator and adjusting the alternator output voltage automatically according to the battery status and fuel efficiency. The charge indicator lamp on the instrument panel provides status information of the alternator for the user. During start, no alternator status will be displayed; when the engine is working, if overvoltage, undervoltage or mechanical fault occurs in the alternator, the power controller requests the instrument to display the fault.
- Load management: this function manages the load according to vehicle load and power. When the battery is low, apply electrical load limit mode, and the hazard level will be displayed on the instrument.

DC conversion

The DC converter module includes boost mode and bypass mode.

- Boost mode: it is enabled when the stop/start is activated and the battery is in good state. During start, the stop/start mode ensures normal operation of the IPK, entertainment system and A/C by providing a stable voltage (appr. 12V) for some electric equipment that ensures ride comfort.
- Bypass mode: it is enabled when the boos mode is disabled, which can directly use the input voltage of the PMDC as an output voltage.

Self-learning

The PMDC detects real-time battery status and collects information involving the voltage, current and temperature of the battery. When the battery negative is reconnected after disconnection or when the battery is replaced, vehicles with the intelligent stop/start energy saving system shall be stationary for at least 4hr so that the PMDC can acquire stable and accurate battery status information and meet the operation requirement of the intelligent stop/start energy saving system. Failure to observe the above requirements can lead to failure of the intelligent stop/start energy saving system before the PMDC can acquire any accurate battery status information.

www.cargeek.ir

www.cargeek.ir

www.cargeek.ir

Service Procedures

DC Converter with Electrical Power Management

Remove

1. Disconnect the battery negative.
2. Search for the preset cutting mark on the carpet near the sliding rail on the right of driver seat.
3. Cut the carpet along the mark.
4. Disconnect the connector (1) from PMDC.
5. Remove 2 bolts (2) securing PMDC to the body.

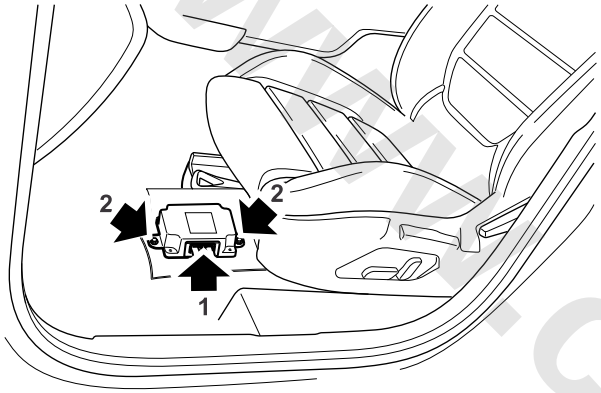

S8433001

6. Remove PMDC.

Refit

1. Connect the connector of the PMDC.
2. Connect the battery negative.
3. Programme and code the PMDC.

☞ **Self-learning and Adjustment, Programming and Coding - PMDC Replacement**

4. Fix the PMDC to the body, fit 2 bolts, tighten to **7–10Nm** and check the torque.
5. Resume the carpet, and try not to damage the cotton felt of the carpet for the felt can prevent depression of the carpet.

www.cargeek.ir

www.cargeek.ir

www.cargeek.ir

Body Dimension

Point to Point Dimensional Information

Side and Top

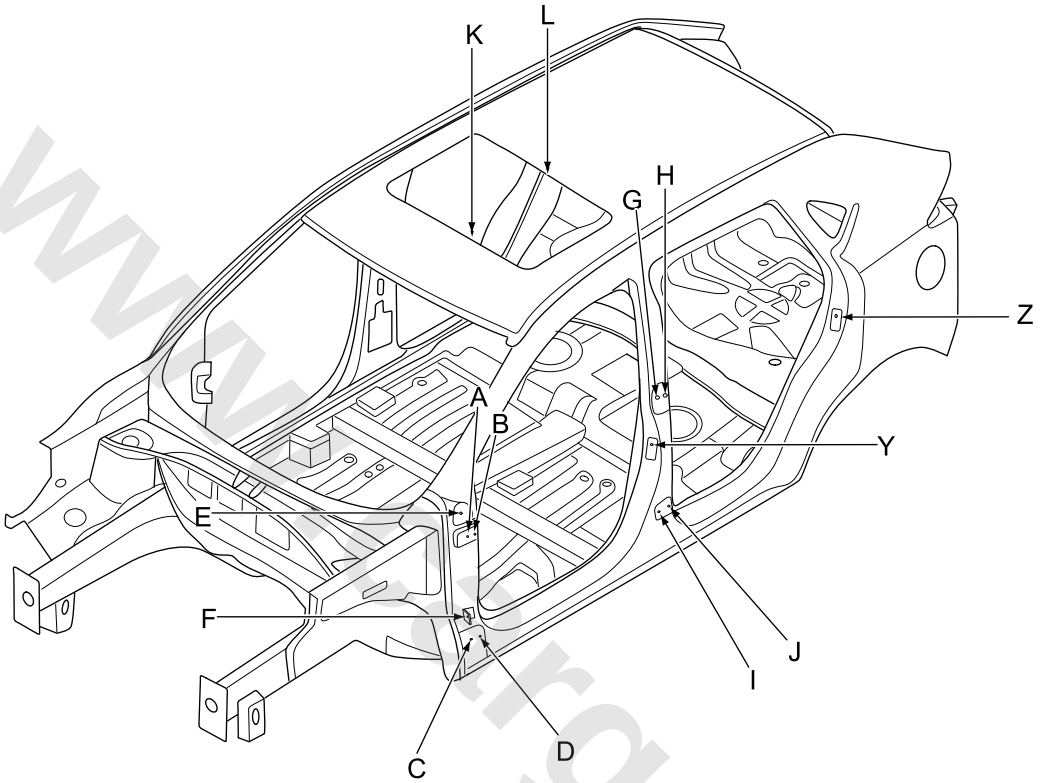

S5210005

Position	From	To	Length (mm)
A-Y	Front Door Hinge Mounting Hole	Front Door Buckle Mounting Hole	1013
B-Y	Front Door Hinge Mounting Hole	Front Door Buckle Mounting Hole	987
C-Y	Front Door Hinge Mounting Hole	Front Door Buckle Mounting Hole	1064
D-Y	Front Door Hinge Mounting Hole	Front Door Buckle Mounting Hole	1039
E-Y	Fender Mounting Hole	Front Door Buckle Mounting Hole	1015
F-Y	Fender Mounting Hole	Front Door Buckle Mounting Hole	1080
G-Z	Rear Door Hinge Mounting Hole	Rear Door Buckle Mounting Hole	973
H-Z	Rear Door Hinge Mounting Hole	Rear Door Buckle Mounting Hole	946
I-Z	Rear Door Hinge Mounting Hole	Rear Door Buckle Mounting Hole	1069
J-Z	Rear Door Hinge Mounting Hole	Rear Door Buckle Mounting Hole	1045

www.cargeek.ir

www.cargeek.ir

K-L	Sunroof Matching Point	Sunroof Matching Point	476

Note: All dimensions are to hole/slot centres.

www.cargeek.ir

www.cargeek.ir

www.cargeek.ir

Bottom

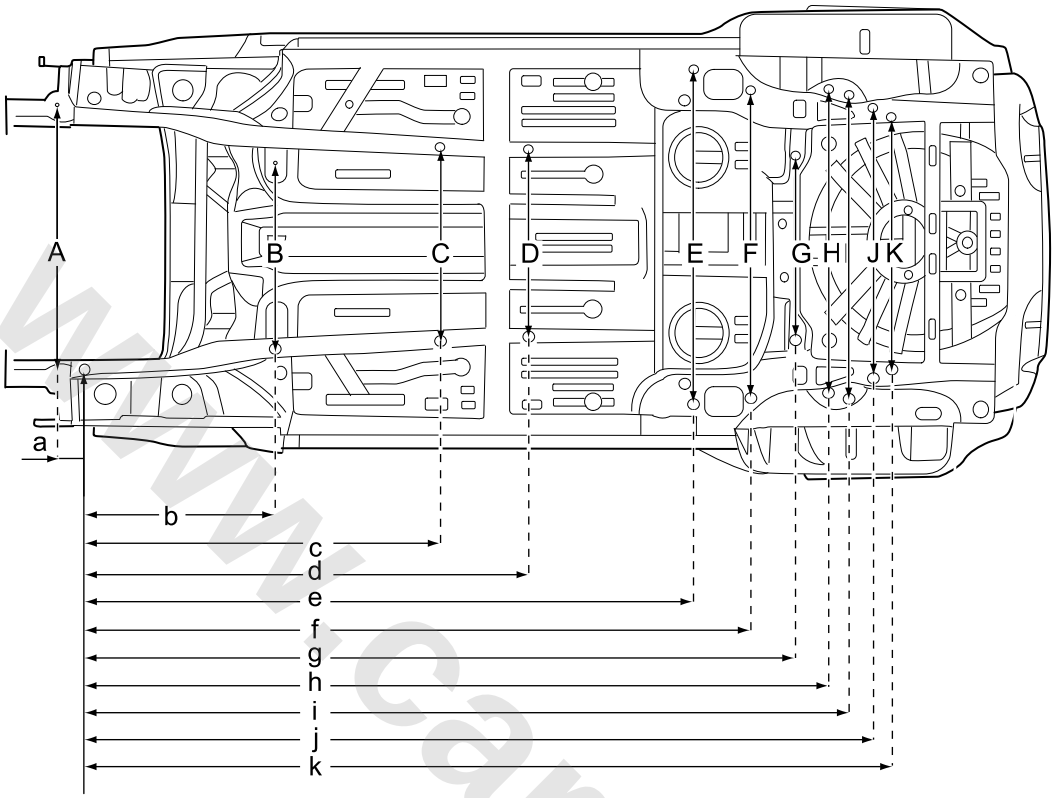

S5120005

Position	From	To	Length (mm)
A	Front Subframe Mounting Hole - LH	Front Subframe Mounting Hole - RH	1054
B	Front Subframe Mounting Hole - LH	Front Subframe Mounting Hole - RH	550
C	Front Longitudinal Beam Mounting Hole - LH	Front Longitudinal Beam Mounting Hole - RH	738
D	Fuel Tank Mounting Hole - LH	Fuel Tank Mounting Hole - RH	712
E	Trailing Arm Mounting Hole - LH	Trailing Arm Mounting Hole - RH	1309
F	Trailing Arm Mounting Hole - LH	Trailing Arm Mounting Hole - RH	1272
G	Rear Subframe Mounting Hole - LH	Rear Subframe Mounting Hole - RH	707
H	Rear Damper Mounting Hole - LH	Rear Damper Mounting Hole - RH	1147
I	Rear Damper Mounting Hole - LH	Rear Damper Mounting Hole - RH	1148
J	Rear Subframe Mounting Hole - LH	Rear Subframe Mounting Hole - RH	1034
K	Rear Subframe Mounting Hole - LH	Rear Subframe Mounting Hole - RH	990

www.cargeek.ir

www.cargeek.ir

a	Main Datum Hole	Front Subframe Mounting Hole	113
b	Main Datum Hole	Front Subframe Mounting Hole	733
c	Main Datum Hole	Front Longitudinal Beam Mounting Hole	1357
d	Main Datum Hole	Fuel Tank Mounting Hole	1794
e	Main Datum Hole	Trailing Arm Mounting Hole	2372
f	Main Datum Hole	Trailing Arm Mounting Hole	2554
h	Main Datum Hole	Rear Subframe Mounting Hole	2754
h	Main Datum Hole	Rear Damper Mounting Hole	2855
i	Main Datum Hole	Rear Damper Mounting Hole	2961
j	Main Datum Hole	Rear Subframe Mounting Hole	3063
k	Main Datum Hole	Rear Subframe Mounting Hole	3099

Note: All dimensions are to hole/slot centres.

www.cargeek.ir

www.cargeek.ir

www.cargeek.ir

Rear End

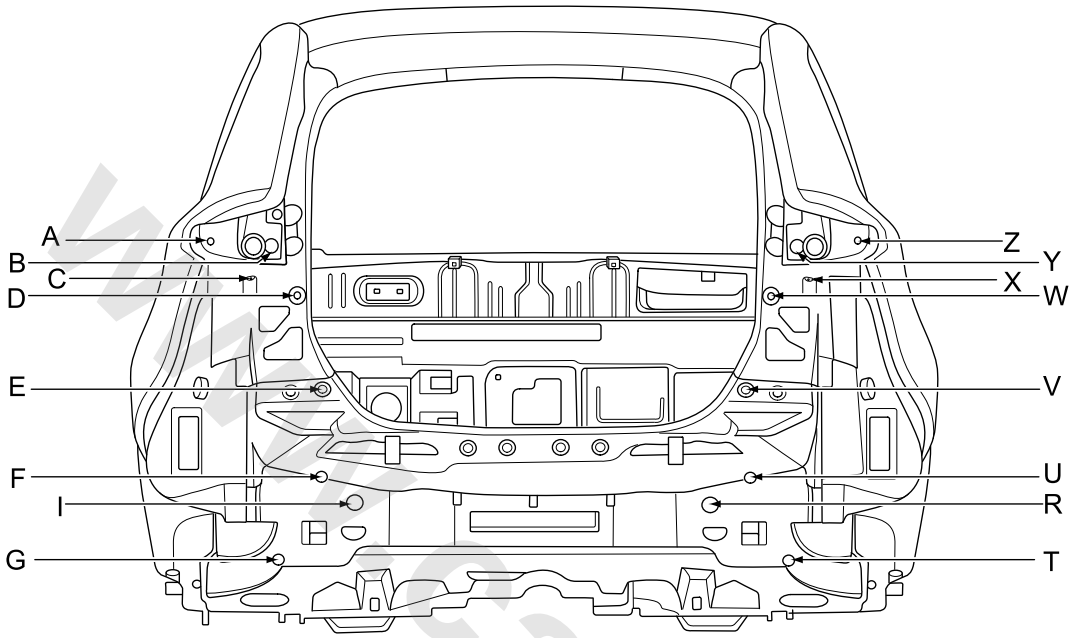

SC250005

Position	From	To	Length (mm)
A-Z	Rear Lamp Mounting Hole - LH	Rear Lamp Mounting Hole - RH	1168
B-Y	Rear Lamp Mounting Hole - LH	Rear Lamp Mounting Hole - RH	1455
C-X	Rear Lamp Mounting Hole - LH	Rear Lamp Mounting Hole - RH	1175
D-W	Rear Bumper Bracket Mounting Hole - LH	Rear Bumper Bracket Mounting Hole - RH	1255
E-V	Rear Bumper Bracket Mounting Hole - LH	Rear Bumper Bracket Mounting Hole - RH	1074
F-U	Rear Bumper Mounting Hole - LH	Rear Bumper Mounting Hole - RH	962
G-T	Rear Bumper Mounting Hole - LH	Rear Bumper Mounting Hole - RH	780
H-S	Rear Bar Mounting Hole - LH	Rear Bar Mounting Hole - RH	1100
I-R	Rear Bar Mounting Hole - LH	Rear Bar Mounting Hole - RH	1014

Note: All dimensions are to hole/slot centres.

www.cargeek.ir

www.cargeek.ir

Internal

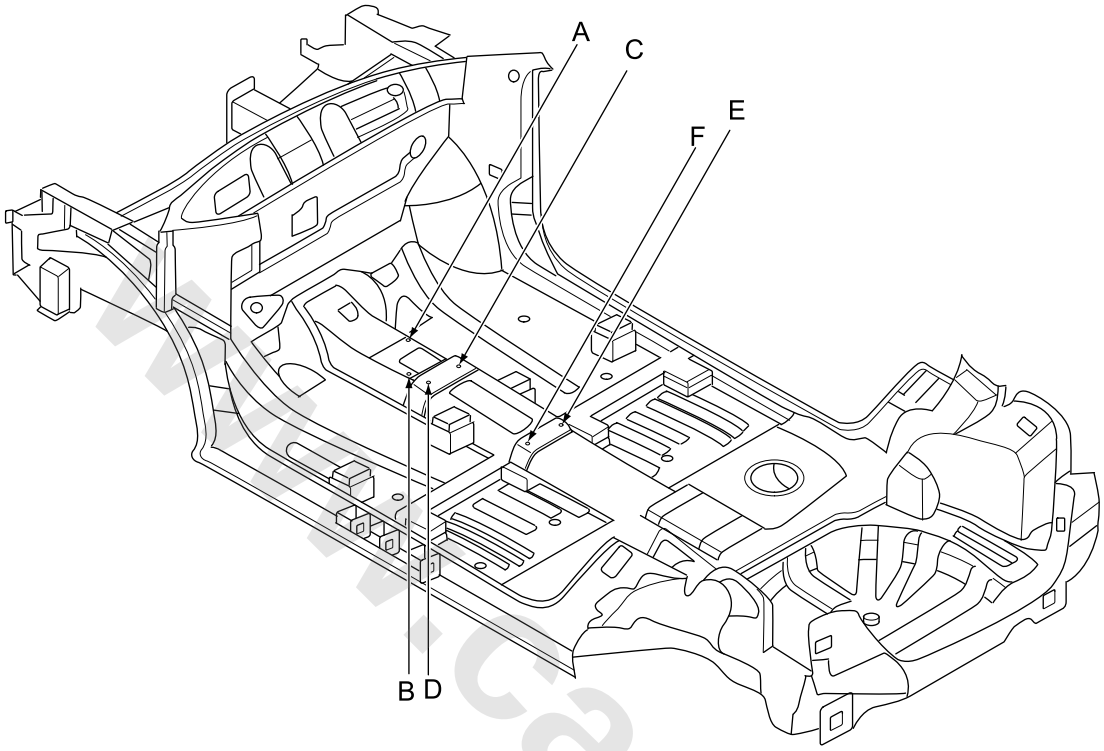

S5130005

Part	From	To	Length (mm)
A-C	Airbag ECU Mounting Point	Gear Shift Mechanism Mounting Point	138
A-D	Airbag ECU Mounting Point	Gear Shift Mechanism Mounting Point	163
A-E	Airbag ECU Mounting Point	Gear Shift Mechanism Mounting Point	470
B-C	Airbag ECU Mounting Point	Gear Shift Mechanism Mounting Point	112
B-D	Airbag ECU Mounting Point	Gear Shift Mechanism Mounting Point	69
B-F	Airbag ECU Mounting Point	Gear Shift Mechanism Mounting Point	400

Note: All dimensions are to hole/slot centres.

www.cargeek.ir

www.cargeek.ir

Front End

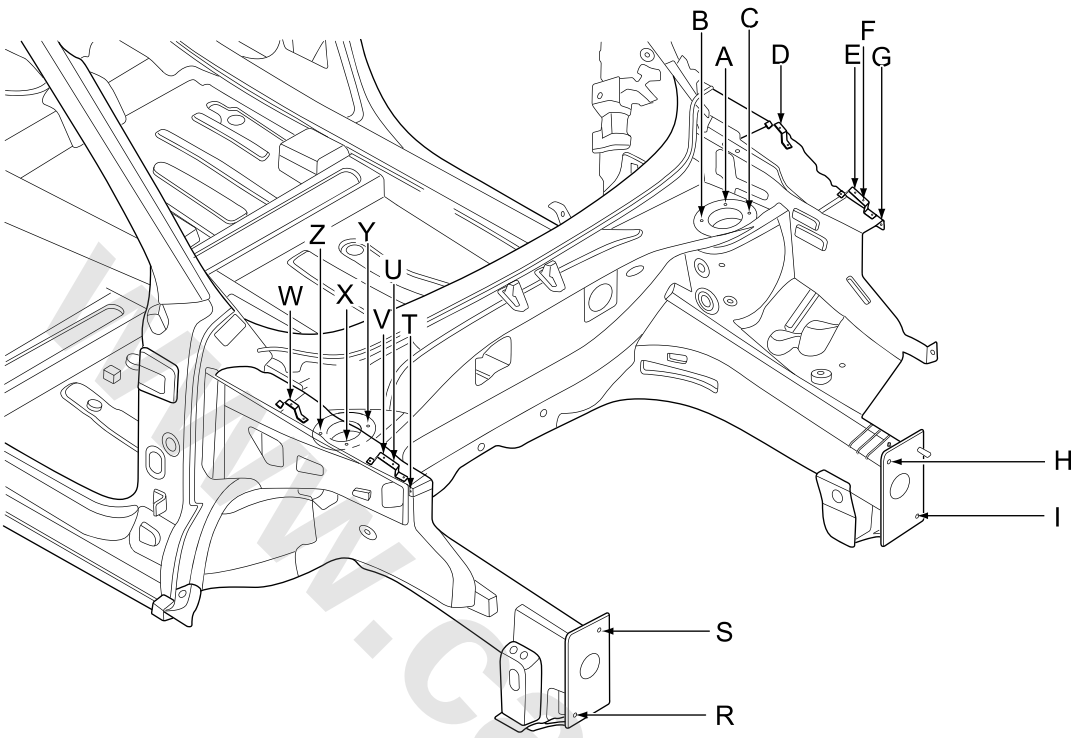

S5110005

Position	From	To	Length (mm)
A-Z	Front Bar Mounting Hole - LH	Front Bar Mounting Hole - RH	1241
B-Y	Front Bar Mounting Hole - LH	Front Bar Mounting Hole - RH	1053
C-X	Front Bar Mounting Hole - LH	Front Bar Mounting Hole - RH	1241
D-W	Fender Mounting Hole - LH	Fender Mounting Hole - RH	1517
E-V	Fender Mounting Hole - LH	Fender Mounting Hole - RH	1493
F-U	Fender Mounting Hole - LH	Fender Mounting Hole - RH	1486
G-T	Fender Mounting Hole - LH	Fender Mounting Hole - RH	1498
H-S	Front Bumper Mounting Hole - LH	Front Bumper Mounting Hole - RH	921
I-R	Front Bumper Mounting Hole - LH	Front Bumper Mounting Hole - RH	1095

Note: All dimensions are to hole/slot centres.

www.cargeek.ir

www.cargeek.ir

Gap Information

Information of Bodyside and Fuel Fill Door

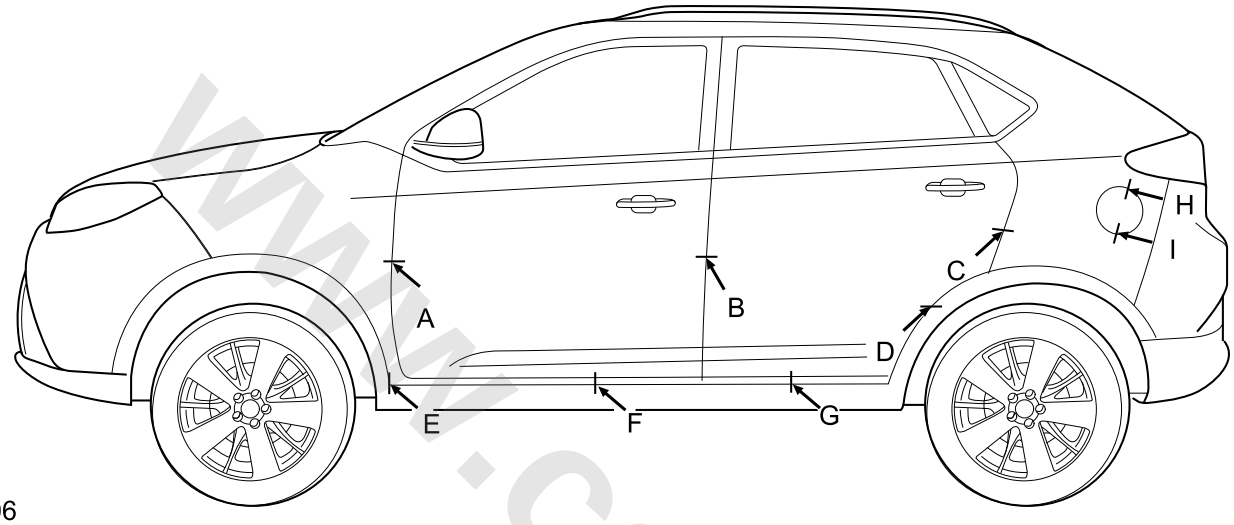

S5210006

Section	Description	Gap (mm)	Flushness (mm)
A	Fender to Front Door	4.0±0.7 //0.5	0+1.0/0
B	Front Door to Rear Door	4.0±0.7 //0.5	0+1.0/0
C	Rear Door to Bodyside	4.0±0.7 //0.5	0+1.0/0
D	Rear Door to Wheel Opening Molding	4.0±1.0 //1.0	N/A
E	Fender to Door Sill	2.0±1.0	N/A
F	Door Sill to Front Door	6.0±1.5	N/A
G	Door Sill to Rear Door	6.0±1.5	N/A
H	Fuel Fill Door to Bodyside	3.0±0.8 //0.8	-0.5±0.5
I	Fuel Fill Door to Bodyside	3.0±0.8 //0.8	0+0/-0.5

Note: "Part 1" to "Part 2", "Part 2" is base part to measure flush.

Note: "//" represents parallel requirement, It means the difference between maximum clearance and minimum clearance should be within the required range.

www.cargeek.ir

www.cargeek.ir

Front End Information

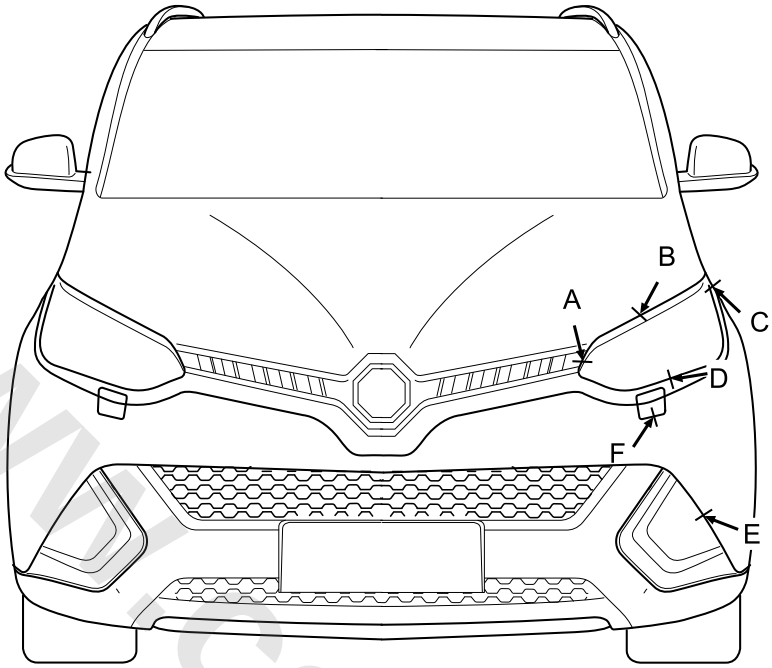

S6510005

Section	Description	Gap (mm)	Flushness (mm)
A	Grille to Front Lamp	2.5±1.2 //1.0	N/A
B	Headlamp to Bonnet	(6.5-5.0)±1.5	N/A
C	Headlamp to Fender	2.0±1.0	-0.5±1.0
D	Headlamp to Bumper	2.0±1.0 //1.0	N/A
E	Fog Lamp to Bumper	2.0±0.8	N/A
F	Bumper to Washer Cover	0.5±0.3	-0.5±0.5

Note: "Part 1" to "Part 2", "Part 2" is base part to measure flush.

Note: "//" represents parallel requirement, It means the difference between maximum clearance and minimum clearance should be within the required range.

www.cargeek.ir

www.cargeek.ir

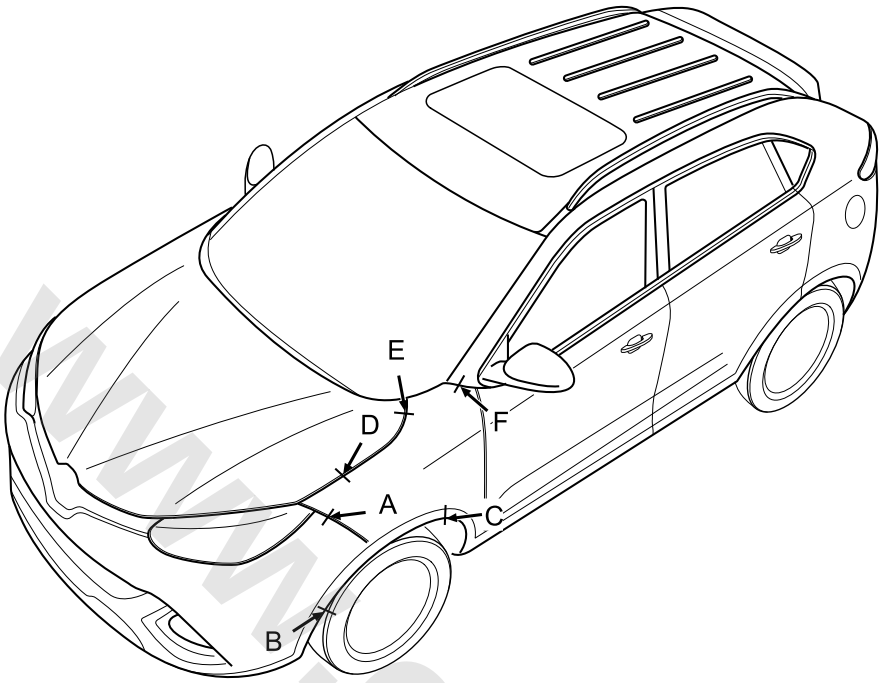

SC320005

Section	Description	Gap (mm)	Flushness (mm)
A	Bumper to Fender	0±0.5	-0.5±0.5
B	Bumper to Wheel Opening Molding	0.3±0.3	N/A
C	Fender to Wheel Opening Molding	0.3±0.3	N/A
D	Bonnet to Fender	4.0±0.8 //0.8	0±0.8
E	Bonnet to Fender	4.0±0.8 //0.8	0±0.8
F	Fender to A Post	2.0±1.0 //1.0	N/A

Note: "Part 1" to "Part 2", "Part 2" is base part to measure flush.

Note: "//" represents parallel requirement, It means the difference between maximum clearance and minimum clearance should be within the required range.

www.cargeek.ir

www.cargeek.ir

Rear End Information

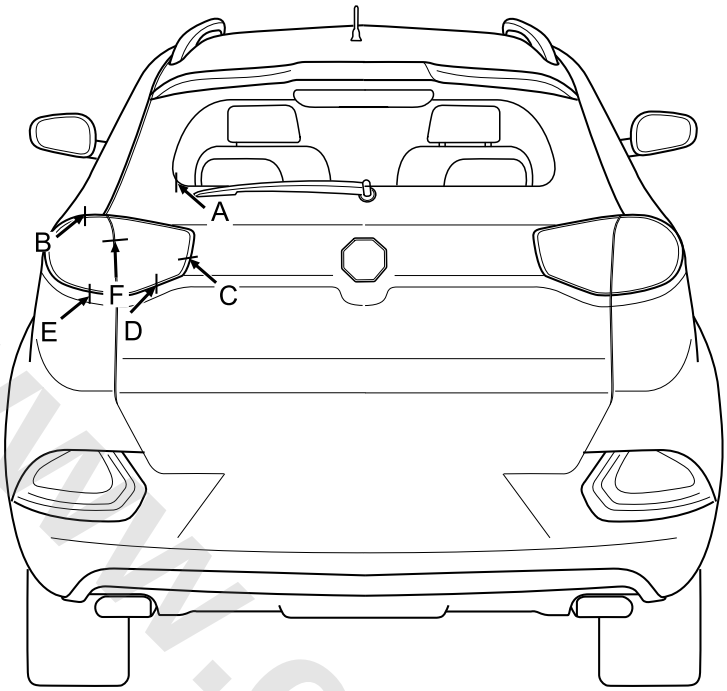

SC250006

Section	Description	Gap (mm)	Flushness (mm)
A	Rear Glass to Rear Lamp	3.0±1.0 //1.0	0±1.0 //1.0
B	Rear Lamp A to Bodyside	1.5±0.8 //0.8	N/A
C	Rear Lamp B to Tailgate Applique	1.5±1.0 //0.8	0±1.0 //0.8
D	Rear Lamp B to Tailgate	1.5±1.0 //0.8	N/A
E	Rear Lamp A to Rear Bumper	1.5±1.0 //0.8	N/A
F	Rear Lamp A to Rear Lamp B	4.0±1.0 //1.0	0±1.0

Note: "Part 1" to "Part 2", "Part 2" is base part to measure flush.

Note: "//" represents parallel requirement, It means the difference between maximum clearance and minimum clearance should be within the required range.

www.cargeek.ir

www.cargeek.ir

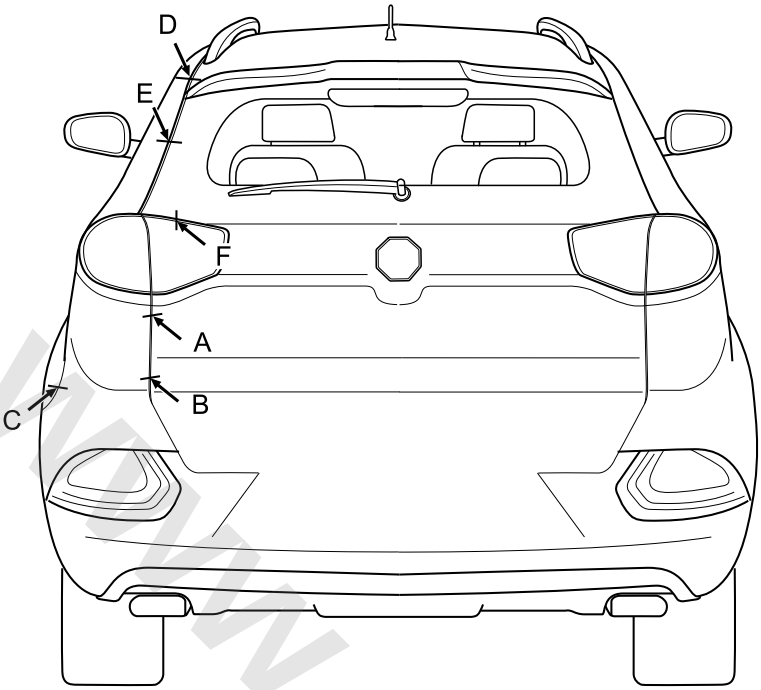

SC250007

Section	Description	Gap (mm)	Flushness (mm)
A	Rear Bumper to Tailgate	4.0±1.0 //1.0	0±1.0
B	Rear Bumper to Tailgate	4.0±1.0 //1.0	0.5±1.0
C	Rear Bumper to Bodyside	0+0.5/0	-0.5±0.5
D	Spoiler to Bodyside	4.0±1.2 //1.0	N/A
E	Rear Screen to Bodyside	4.0±1.0 //1.0	N/A
F	Rear Screen to Rear Lamp	3.0±1.0 //1.0	0±1.0 //1.0

Note: "Part 1" to "Part 2", "Part 2" is base part to measure flush.

Note: "//" represents parallel requirement, It means the difference between maximum clearance and minimum clearance should be within the required range.

www.cargeek.ir

www.cargeek.ir

Sunroof Information

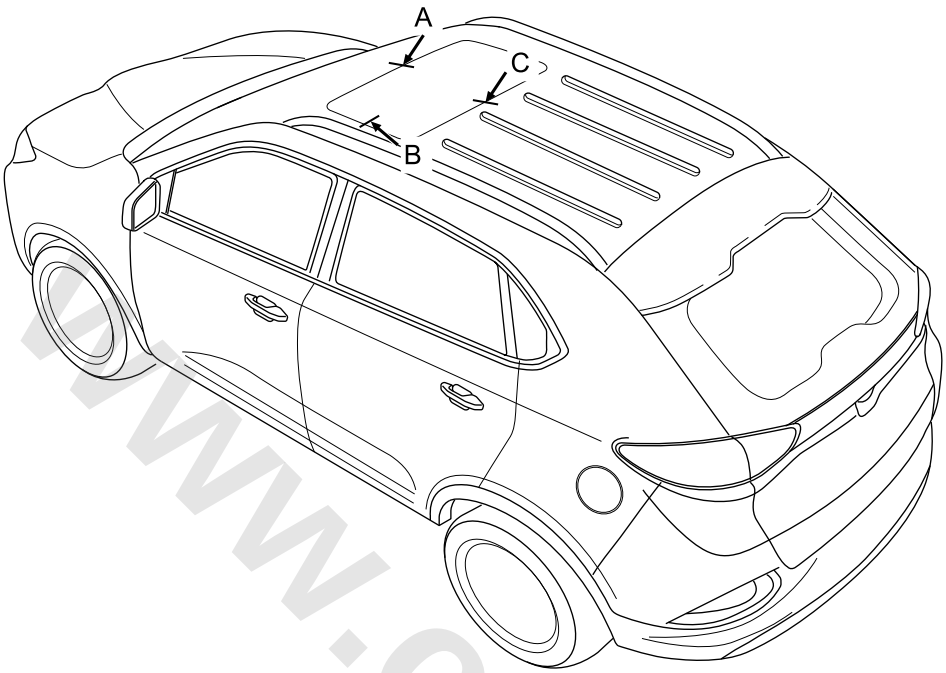

S6310005

Section	Description	Gap (mm)	Flushness (mm)
A	Sunroof Glass to Roof	0	0+0/-1.0
B	Sunroof Glass to Roof	0	0±1.0
C	Sunroof Glass to Roof	0	0+1.0/0

Note: "Part 1" to "Part 2", "Part 2" is base part to measure flush.

www.cargeek.ir

www.cargeek.ir

Paint and Coatings

Overview

Panel Preparation

Replacement panels are supplied with a cathodic primer coating as part of the panel protection and in compliance with the vehicle's Corrosion Warranty, where applicable.

DO NOT remove the primer before paint refinishing. In the event of localised surface damage or imperfections, ensure that only the minimum of primer is removed during rectification work for effective repair.

Rectify damage as far as possible by panel beating or straightening. To remove corrosion or paint runs on outer surfaces, abrade the primer coat in the affected area as necessary, then follow the procedure below:

1. Clean the panel using a solvent wipe.
2. Treat exposed areas of metal with an etch phosphate process.
3. Re-treat the affected area using either a separate acid-etch primer and two-pack surfacer, or an integrated etch primer/filler.

Welded Panels

When replacing welded panels the following procedure must be observed:

1. Remove primer from the immediate vicinity of new and existing panel flanges, cleaning to bright metal finish.
2. On joints to be spot welded, apply weldthrough zinc rich primer to joint faces of both flanges. Make spot welds while primer is still wet or according to the manufacturer's instructions.
3. Dress accessible weld joints.
4. Clean panel using solvent wipe.
5. Treat bare metal with an etch phosphate process.
6. Re-treat repaired areas.

Sectioned Panels

When replacing part or sectioned panels, the basic procedure is the same as for welded panels described above, with the following variations:

1. Remove primer from both new and existing joint faces, cleaning to a bright metal finish.
2. Where an overlap joint with the existing panel is to be spot welded, apply weldthrough, zinc rich primer to both joint faces and spot weld while the primer is still wet, or according to the manufacturer's instructions.
3. **MIG** weld butt joints where applicable.
4. Dress weld joints.
5. Clean the panel with a solvent wipe.
6. Treat bare metal areas using an etch phosphate process.
7. Re-treat the affected area using either a separate acid-etch primer and two-pack surfacer, or an integrated etch primer/filler.
8. Treat the inner faces of lap or butt joints with a suitable cavity wax.

Clinched Panels

When replacing clinched panels the following procedure must be observed:

1. Abrade primer on new and existing panel joint faces, and clean using a solvent wipe.
2. Apply metal-to-metal adhesive where applicable.
3. Where joints are to be spot welded, apply suitable weld-through, zinc rich primer to weld areas.
4. Where joints are to be welded (**MIG**/**MAG** or spotweld) , apply zinc rich primer in adjacent areas.
5. To retain the panel while clinching the flanges, tack spot weld or plug weld as appropriate.
6. Clean the panel with a solvent wipe.
7. Treat bare metal areas with a suitable etch phosphate process.
8. Re-treat the affected area using either a separate acid-etch primer and two-pack surfacer, or an integrated etch primer/filler.

Paint Preparation - Paint Refinishing

The following process must be adhered to for paint refinishing operations.

1. Seal required exterior and interior seams with an approved seam sealer.
2. Repair any damage to underbody sealers.
3. Apply a two-pack paint refinishing system. This meets with original build integrity.
4. Apply cavity wax to all interior surfaces which have not received refinish paint.

Paint Repairs

The following process must be adhered to for paint repair operations.

1. Before carrying out paintwork repairs, clean the vehicle thoroughly using either a steam cleaner or high-pressure washer.
2. Wash locally repaired areas using a mild water-mixable detergent and wipe them clean with solvent, immediately before paint application.
3. Ensure that damaged paintwork which has led to exposed metal is abraded until the metal is clean, extending beyond the area of the original damage.

www.cargeek.ir

4. Treat the bare metal with an etch phosphate to remove all traces of rust and to provide a key for new paint coats.
5. Re-treat the affected area using either a separate acid-etch primer and two-pack surfacer or an integrated etch primer/filler, and follow with a two-pack paint system.
6. Treat those surfaces not receiving paint using an approved cavity wax, following paint operations.

Paint Construction

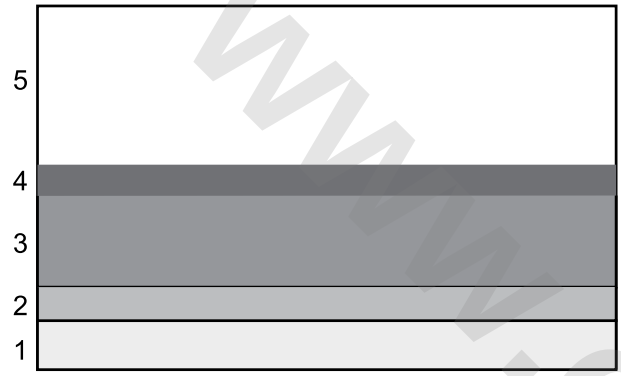

S882044

1. Vehicle body.
2. Etch primer.
3. Primer filler.
4. Basecoat colour.
5. Clear coat.

Caution: When heat curing paint repairs: The temperature must not exceed 60°C (140°F) metal temperature and maximum cycle time 30 - 40 minutes. Temperatures/times above these figures will cause damage to the vehicle electrical system and plastic parts may distort.

Paint procedure system

The following process must be adhered to for paint refinishing operations.

- Strip and refinish.
- Flat and refinish.
- Local respray.
- Fine flat, compound and polish.
- Compound and polish.
- Local compound and polish.
- Brush touch up.
- Local strip. The term "local" defines repairs limited to an area of approximately 380mm×380mm (15in×15in) and which forms a section of a panel.

This Paint Refinishing section includes check lists have been collated to assist the painter. These lists are categorised into three main popular repair types:

1. Repairs to panels with scratches down to baremetal.
2. Refinishing new original replacement panels.
3. Refinishing painted panels that are original equipment or two-component material

   This is a guideline only. Use specific Paint Manufacturers recommendations as per the individual data sheet systems.

Repairs to Panels with Scratches Down to Bare Metal

- Degrease area or panel that requires repair.
- Abrade the damaged area with Dry P240- wet P400 grade paper, feather edge the paint film.
- Abrade complete panel.
- For complete panel abrade: Dry P240 grade paper if priming the entire panel.
- For spot repairs: Dry P400 or wet P800 grade paper with abrading block. Finalise preparation with wet P1000 grade paper by hand.
- Clean panel with airline blower gun and degrease.
- If bare metal is visible, apply a Wash Etch type primer. Minimum build 25-30 µm.
- Do not abrade Etch primer; Apply tinted two-component primer to the suggested micron build. (Tinted primer to replicate original sealer coat).
- To aid sanding use a dark coloured guide coat. (Do not use black cellulose aerosol) Use a basecoat mix or dry powder type.
- Abrade with dry P500 or wet P1000 grade paper. (Minimum build of two-component primer, 80 µm).
- Remove all traces of contamination using airline blower gun and degrease.
- Apply the base coat to achieve opacity.
- After flash off of the basecoat solvents, apply Clear coat to a minimum build of 45- 50 µm.

Refinishing New Original Replacement Panels

- Degrease area or panel that requires repair.
- Abrade complete panel with Dry P240 grade paper.
- Clean panel with airline blower gun and degrease.
- If bare metal is visible, apply a Wash Etch type primer. Minimum build 25-30 µm.
- Do not abrade Etch primer; Apply tinted two-component primer to the suggested micron build. (Tinted primer to replicate original sealer coat).

www.cargeek.ir

www.cargeek.ir

- To aid sanding use a dark coloured guide coat. (Do not use black cellulose aerosol) Use a basecoat mix or dry powder type.
- Abrade with dry P500 or wet P1000 grade paper. (Minimum build of two component primer, 80 µm).
- Remove all traces of contamination using airline blower gun and degrease.
- Apply the base coat to achieve opacity.
- After flash off of the basecoat solvents, apply Clear coat to a minimum build of 45- 50 µm.
- Degrease area or panel that repuires repair.
- Abrade complete panel with dry P240 grade paper or wet P800 grade paper with abrading block.For optimum performance , finalise with wet P1000 grade paper by hand.
- Clean panel with airline blower gun and degrease.
- Apply the base coat to achieve opacity.
- After flash off of the basecoat solvents, apply Clear coat to a minimum build of 45- 50 µm.

Refinishing Original Equipment Painted Panels or Two-component Material

- Degrease area or panel that requires repair.
- Abrade complete panel with Dry P240 grade paper or abrade wet with P800 and block. For optimum performance finalise with wet P1000 grade paper by hand.
- Clean panel with airline blower gun and degrease.
- Apply the base coat to achieve opacity.
- After flash off of the basecoat solvents, apply Clear coat to a minimum build of 45- 50 µm.

www.cargeek.ir

www.cargeek.ir

www.cargeek.ir

Collision Repair

Description and Operation

General Welding Protection Measures

Overview

For ease of reference, the diagrams on the following pages show only the type of weld used in repair where it varies from that used in production.

The replacement welds in the welding diagrams are denoted by the following symbols:

S883029

A.= Single/Multiple thickness plug welds

B.= **MIG** seam weld

When carrying out welding operations the following criteria must be observed:

- Where resistance spot welds have been used in production, these must be reproduced with new spot welds in replacement where possible. All such reproduction spot welds must be spaced 30 mm apart.
- When spot welding, it is recommended that test coupons of the same metal gauges and materials are produced to carry out peel tests to ensure that welding equipment being used can produce a satisfactory joint. Plug welds must be used if a satisfactory spot weld cannot be produced.
- The electrode arms on hand-held spot welding guns must not exceed 300 mm in length.
- Single-side spot welding is not acceptable.
- Gas welding and brazing are not acceptable.
- Where 3 metal thicknesses or more are to be welded together it is imperative to use **MIG** plug welds to ensure joint strength.
- **MIG** plug welds must be used in repair joints where there is no access for a resistance spot welder. To replace each production spot weld, an 8mm (approx.) hole must be drilled and/or punched, and a **MIG** plug weld then made in its place. The number of plug welds must match exactly the number of spot welds which have been removed.
- Where holes are left in an existing panel after removal of the spot welds, a single **MIG** plug weld will be made in each hole as appropriate.

Electronic Control Unit

The Electronic Control Units (**ECU**) fitted to vehicles make it advisable to follow suitable precautions prior to carrying out welding repair operations.

Harsh conditions of heat and vibration may be generated during these operations which could cause damage to the units.

In particular, it is essential to follow the appropriate precautions when disconnecting or removing the Supplementary restraint system Diagnostic Module.

Supplementary Restraint System Precautions

Any work undertaken which involves the removal or replacement of any item of the Supplementary Restraint System (**SRS**) , requires extreme caution and adherence to the appropriate precautions.

Equipment

Prior to commencing any test procedure on the vehicle, ensure that the relevant test equipment is working correctly and any harness or connectors are in good condition.

This particularly applies to electronic control units.

Seat Belt Anchorages

Seat belt anchorages are safety critical. When making repairs in these areas, it is essential to follow design specifications. Note that High Strength Low Alloy (**HSLA**) steel may be used for seat belt anchorages.

Where possible, the original production assembly should be used, complete with its seat belt anchorages, or the cut line should be so arranged that the original seat belt anchorage is not disturbed.

All welds within 250 mm of seat belt anchorages must be carefully checked for weld quality, including spacing of spot welds.

Panel Replacement Procedure

This procedure is designed to explain the basic panel removal and replacement method. The main criterion in removal and replacement of body panels is that the original standard is maintained as far as possible. While individual repairs will differ in detail, this procedure has been devised placing emphasis on ease of repair and the elimination of unnecessary work.

Body panels are being increasingly manufactured in high strength steels to meet design requirements for safety and weight saving. As panels in high strength steels cannot be

www.cargeek.ir

www.cargeek.ir

visually identified, and as they are more sensitive to excess heat than panels manufactured from low carbon steel, it is advisable that the following procedure be observed at all times.

Remove Panel

1. Expose resistance spot welds. For those spot welds which are not obviously visible, use a rotary drum sander or wire brush fitted to an air drill, or alternatively a hand held wire brush.

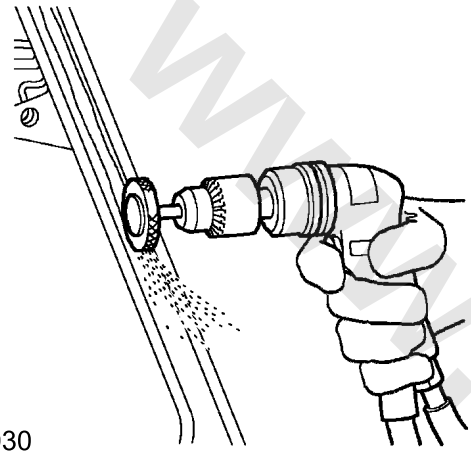

S883030

Caution: In wheel arch areas it may be necessary to soften underbody coating, using a hot air gun, prior to exposing spot welds.

2. Cut out welds using a cobalt drill.

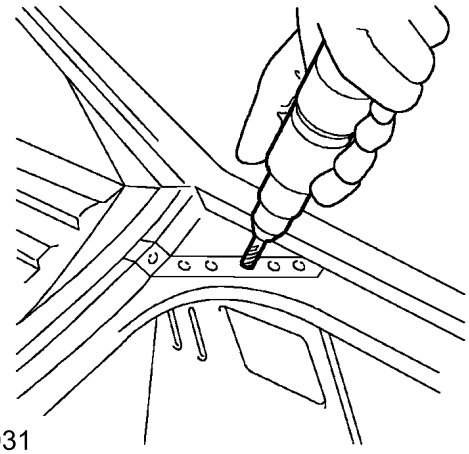

S883031

3. Alternatively, use a clamp-type spot weld remover.

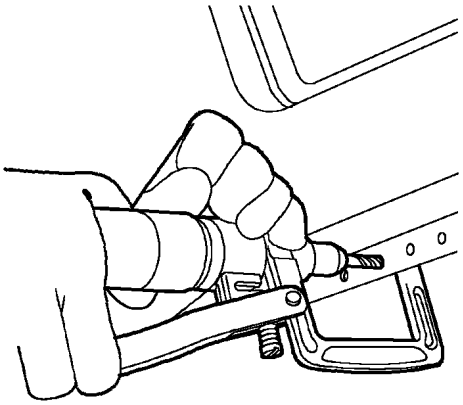

S883032

4. Cut away the bulk of the panel as necessary using an air saw.

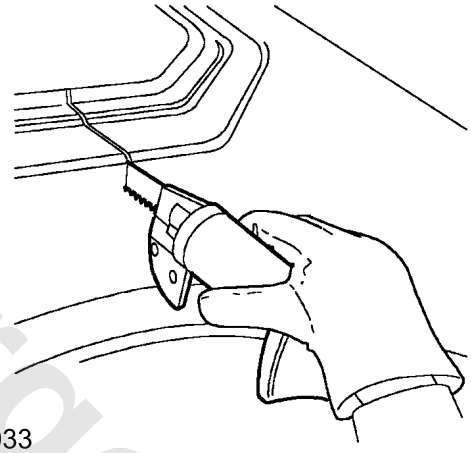

S883033

Caution: On certain panel joints MIG welds and braze should be removed using a sander where possible, before cutting out the panel bulk.

5. Separate spot welded joints and remove panel remnants using hammer, bolster chisel and pincers.

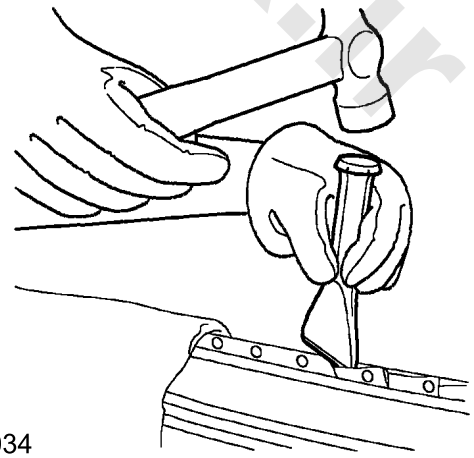

S883034

Prepare Old Surfaces

1. Remove any remaining sealant using a hot air gun to minimise the risk of toxic fumes caused by heat generated during welding.

www.cargeek.ir

www.cargeek.ir

Warning: Care must be taken to avoid excessive heat build-up when using the hot air gun.

2. Clean all panel joint edges to a bright smooth finish, using a belt-type sander.

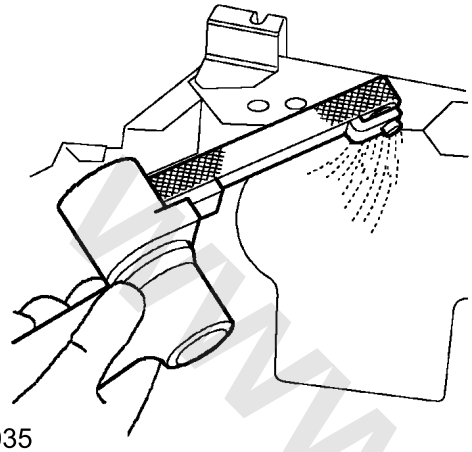

S883035

3. Straighten existing panel joint edges using a shaping block and hammer.

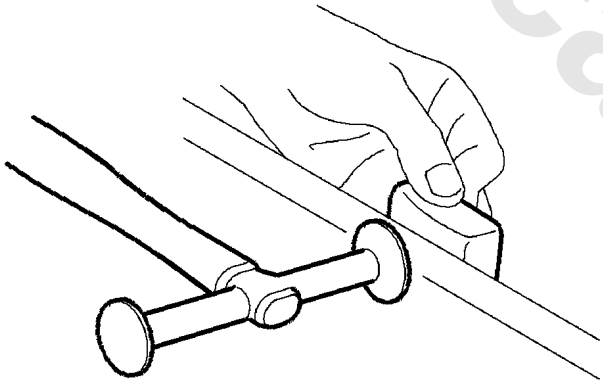

S883036

Prepare New Surfaces

1. Mark out bulk of new panel and trim to size, leaving approximately 50 mm overlap with existing panel. Offer up new panel/section, align with associated panels (e.g. new body side panel aligned with door and boot lid) and clamp it properly

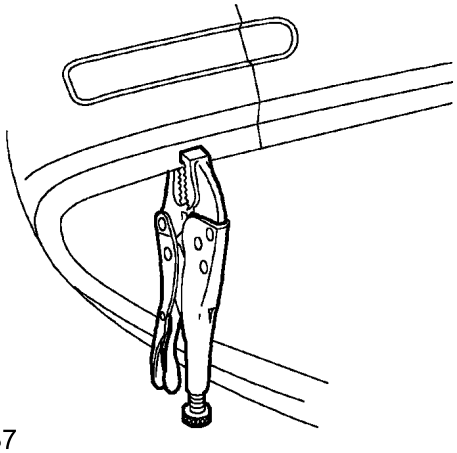

S883037

2. Cut new and existing panels as necessary to form butt, joggle or brace joint as required, Remove all clamps and metal remnants.

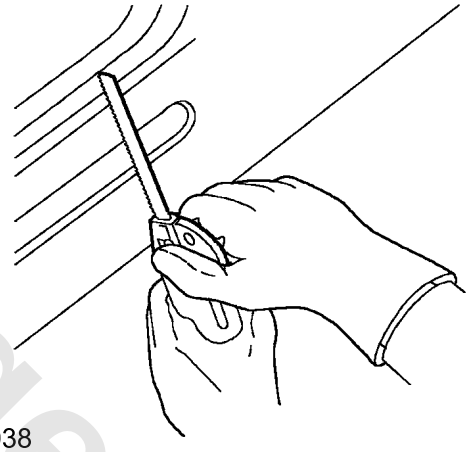

S883038

3. Prepare new panel joint edges for welding by sanding to a bright finish. This must include inner as well as outer faces.

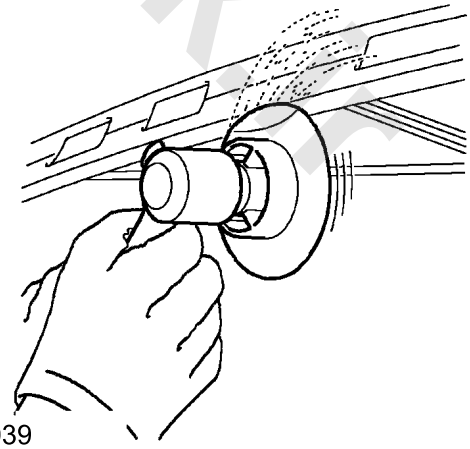

S883039

4. Apply suitable weld-through primer, to panel joint surfaces to be welded, using brush or aerosol can.

www.cargeek.ir

www.cargeek.ir

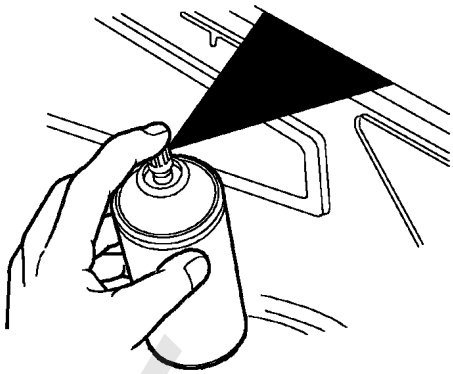

S883040

5. Apply correct sealant or adhesive, as applicable, to panel joint surfaces.

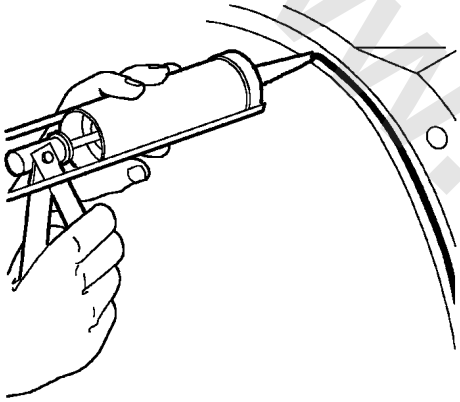

S883041

Offer up and Align

Offer up new panel and align with associated panels.

Clamp into position using welding clamps or other clamps.

Where a joggle or brace joint is being adopted, make a set in the original panel joint edge or insert a brace behind the joint.

Caution: In cases where access for welding clamps is difficult, it may be necessary to use tack welds.

1. Select arms for resistance spot welding and shape electrode tips using a tip trimmer. Tips should be dressed so the diameter is equal to twice the thickness of the metal to be welded plus 3.0 mm.

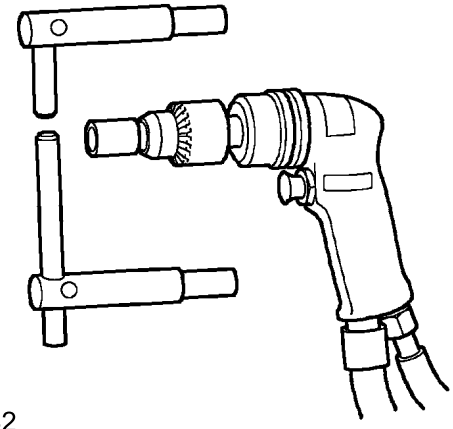

S883042

Caution: Use arms not exceeding 300 mm in length.

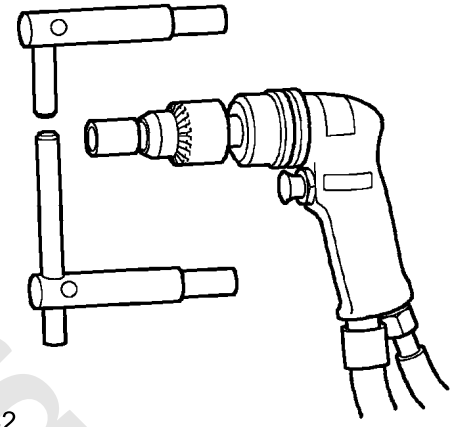

S883042

2. Fit resistance spot welding arms and test equipment for satisfactory operation, using test coupons. Where monitoring equipment is not available, verify weld strength by checking that metal around the weld puddle pulls apart under tension during pulling.

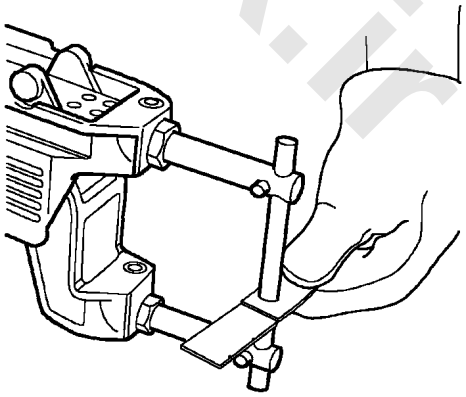

S883043

3. Use a resistance spot welder where access permits. Try to ensure weld quality by using a welding monitor where possible.

www.cargeek.ir

www.cargeek.ir

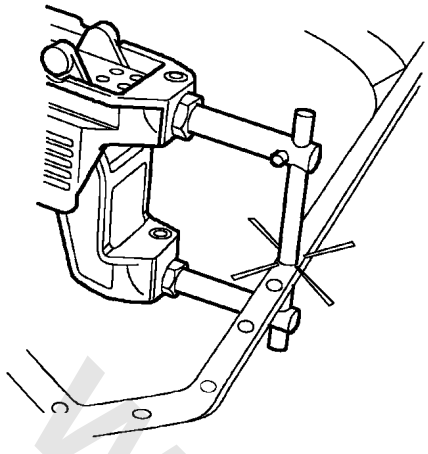

S883044

4. MIG tack weld butt joints and re-check alignment and panel contours where necessary, Ensure that a gap is maintained to minimise welding distortion, by inserting a hacksaw blade as an approximate guide.

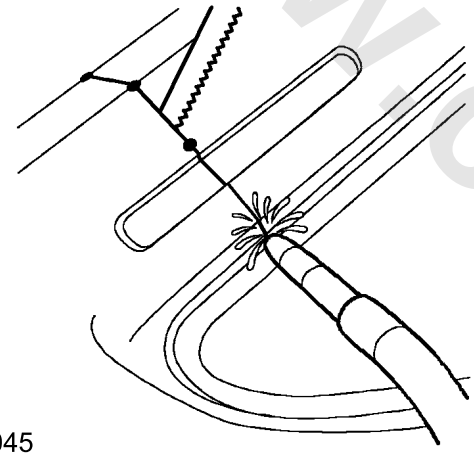

S883045

5. Dress **MIG** tack welds using a sander with 36 grit disc, or a belt-type sander where access is limited.

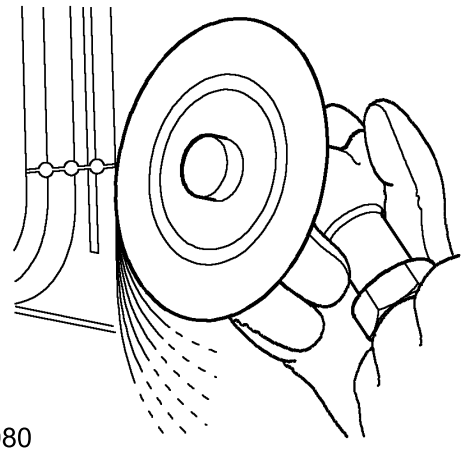

S883080

6. **MIG** seam weld butt joints.

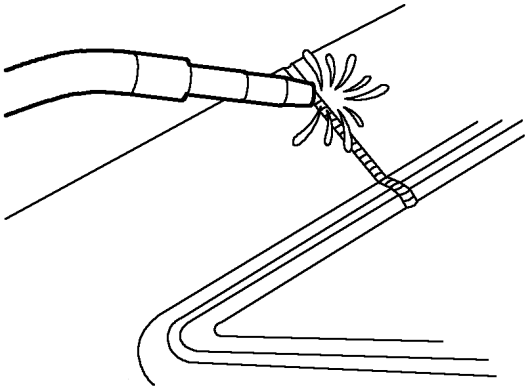

S883081

7. Always use **MIG** plug welds where excessive metal thickness or limited access makes resistance spot welding impractical. Make plug welds either by using holes left by the spot weld cutter, or through holes punched and drilled for the purpose, approximately 8mm diameter.

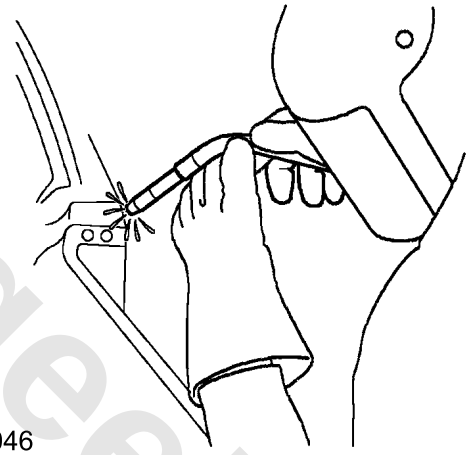

S883046

8. Dress all welds using either a sander with 36 grit disc, or a belt-type sander and/or wire brush. When dressing welds ensure an area as small as possible is removed to protect the zinc coating.

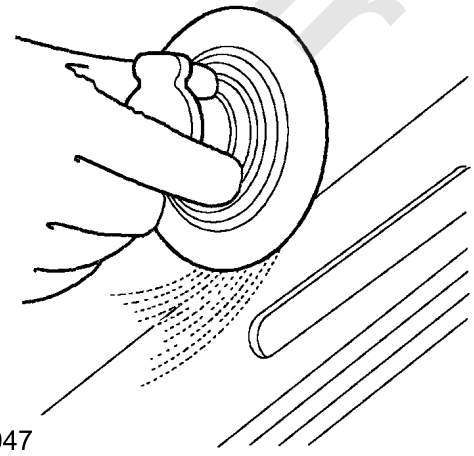

S883047

www.cargeek.ir

www.cargeek.ir

Corrosion Protection

Factory Treatments

During production, vehicle bodies are treated with the following anti-corrosion materials:

- A **PVC**-based underbody sealer which is sprayed onto the underside of the main floor, rear floor and the rear wheel arches;
- An application of cavity wax which is sprayed into the sill panels, side member extensions and the lower areas of the door panels;
- A coat of protective wax is applied to areas of the wheel arch not covered by the liners.

Whenever body repairs are carried out, ensure the anti-corrosion materials in the affected area are repaired or renewed as necessary using the approved materials.

Precautions During Body Repairs and Handling

Take care when handling the vehicle in the workshop.

Underbody sealers, seam sealers, underbody wax and body panels may be damaged if the vehicle is carelessly lifted.

Proprietary Anti-Corrosion Treatments

The application of proprietary anti-corrosion treatments, in addition to the factory-applied treatment, could invalidate the Corrosion Warranty and should be discouraged. This does not apply to homologated compatible, preservative waxes which may be applied on top of existing coatings.

Fitting Approved Accessories

When fitting accessories, ensure that the vehicle's corrosion protection is not affected, either by breaking the protective coating or by introducing a moisture trap.

Do not screw self-tapping screws directly into body panels.

Fit suitable plastic inserts to the panel beforehand.

Always ensure that the edges of holes drilled into panels, chassis members and other body parts are protected with a suitable zinc rich or acid etch primer, and follow with a protective wax coating brushed onto the surrounding area.

Do not attach painted metal surfaces of any accessory directly to the vehicle's bodywork unless suitably protected. Where metal faces are bolted together always interpose a suitable interface material such as weldable zinc rich primer, extruded strip, or zinc tape.

Steam Cleaning and De-waxing

Due to the high temperatures generated by steam cleaning equipment, there is a risk that certain trim components could be damaged and some adhesives and corrosion prevention materials softened or liquefied.

Adjust the equipment so that the nozzle temperature does not exceed 90°C(194°F). Take care not to allow the steam jet to dwell on one area, and keep the nozzle at least 300 mm from panel surfaces.

DO NOT remove wax or lacquer from underbody or underbonnet areas during repairs. Should it be necessary to steam clean these areas, apply a new coating of wax or underbody protection as soon as possible.

Maintenance Inspection

Carry out the following operations to check bodywork for corrosion:

- With the vehicle on a lift, carry out visual check of underbody sealer for damage.
- With the vehicle lowered, inspect exterior paintwork for damage and body panels for corrosion.

Note: If the vehicle is dirty, it will need to be washed prior to inspection of bodywork.

The checks described above are intended to be visual only. It is not intended that the operator should remove trim panels, finishers, rubbing strips or sound-deadening materials when checking the vehicle for corrosion and paint damage.

1. With the vehicle on a lift, and using an inspection or spot lamp, visually check for the following:

- Corrosion damage and damaged paintwork, condition of underbody sealer on front and rear lower panels, sills and wheel arches;
- Damage to underbody sealer. Corrosion in areas adjacent to suspension mountings and fuel tank fixings.

Note: In case no exposure of metal, the little bubble on underbody sealing material can be neglected.

Pay special attention to signs of damage caused to panels or corrosion protection material by incorrect jack positioning.

Warning: It is essential to follow the correct jacking and lifting procedures.

2. With the vehicle lowered, visually check for evidence of damage and corrosion on all visible painted areas, in particular the following:

- Front edge of bonnet.
- Visible flanges in engine compartment.
- Lower body and door panels.

Rectify any bodywork damage or evidence of corrosion found during inspection as soon as is practicable, both to minimise the extent of the damage and to ensure the

www.cargeek.ir

www.cargeek.ir

long term effectiveness of the factory-applied corrosion prevention treatment.

Where corrosion has become evident and is emanating from beneath a removable component (e.g. trim panel, window glass, seat etc.), remove the component as required to permit effective rectification.

Underbody Protection Repairs

Whenever body repairs are carried out, ensure that full sealing and corrosion protection treatments are reinstated. This applies both to the damaged areas and also to areas where protection has been indirectly impaired, as a result either of accident damage or repair operations.

Remove corrosion protection from the damaged area before straightening or panel beating. This applies in particular to panels coated with wax, **PVC** underbody sealer, sound deadening pads etc.

Warning: DO NOT use oxy-acetylene gas equipment to remove corrosion prevention materials. Large volumes of fumes and gases are liberated by these materials when they burn.

Note: The device used for removing strong anti-corrosion sealant can provide several speeds and efficiency. The scraper (not pneumatic chisel) driven by compressed air provides a relatively quiet mechanical method by using a very rapid reciprocating motion. Move the operating edge of the tool along with the workpiece surface to remove the sealing material.

The most common method of removal is by means of a hot air blower with integral scraper. One of the most efficient methods is the rapid cutting 'hot knife'. This tool uses a wide blade and is able to be used easily in profiled sections where access is otherwise difficult.

Use the following procedure when repairing underbody coatings:

1. Remove existing underbody coatings.
2. After panel repair, clean the affected area with a solvent wipe, and treat bare metal with an etch phosphate material.
3. Re-prime the affected area.

Caution: DO NOT, under any circumstances, apply underbody sealer directly to bare metal surfaces.

4. Replace all heat-fusible plugs which have been disturbed. Where such plugs are not available use rubber grommets of equivalent size, ensuring that they are embedded in sealer.
5. Mask off all mounting faces from which mechanical components, hoses and pipe clips, have been removed. Underbody sealer must be applied before such components are refitted.
6. Brush sealer into all exposed seams.
7. Spray the affected area with an approved service underbody sealer.
8. Remove masking from component mounting faces, and touch-in where necessary.

After refitting mechanical components, including hoses and pipes and other fixtures, mask off the brake discs and apply a coat of approved underbody wax.

Note: Where repairs include the application of finish paint coats in the areas requiring underbody wax, carry out paint operations before applying wax.

Underbody Wax

The underbody wax must be reinstated following all repairs affecting wheel arch panels. The wax is applied over paints and underbody sealers.

Remove old underbody wax completely from a zone extending at least 200 mm beyond the area where new underbody sealer is to be applied.

Cavity Wax Injection

After repairs, always treat areas with an approved cavity wax. In addition, treat all interior surfaces which have been disturbed during repairs whether they have been treated in production or not. This includes all box members, cavities and door interiors. It is permissible to drill extra holes for access where necessary, provided these are not positioned in load-bearing members.

Ensure that such holes are treated with a suitable zinc rich primer, brushed with wax and then sealed with a rubber grommet.

Before wax injection, ensure that the cavity to be treated is free from any contamination or foreign matter. Where necessary, clear out any debris using compressed air.

Ensure that cavity wax is applied AFTER the final paint process and BEFORE refitting any trim components.

During application, ensure that the wax covers all flange and seam areas and that it is adequately applied to all repaired areas of both new and existing panels.

It should be noted that new panel assemblies and complete body shells are supplied without wax injection treatment. Ensure that such treatment is carried out after repairs.

Effective cavity wax protection is vital. Always observe the following points:

- Complete all paint refinish operations before wax application.

www.cargeek.ir

www.cargeek.ir

- Clean body panel areas and blow-clean cavities if necessary before treatment.
- Maintain a temperature of 18°C (64°F) during application and drying.
- Check the spray pattern of injection equipment.
- Mask off all areas not to be wax coated and which could be contaminated by wax overspray.
- Remove body fixings, such as seat belt retractors, if contamination is at all likely.
- Move door glasses to fully closed position before treating door interiors.
- Treat body areas normally covered by trim before refitting items.
- Check that body and door drain holes are clear after the protective wax has dried.
- Keep all equipment clean, especially wax injection nozzles. Areas treated with cavity wax are shown in the following figures.

www.cargeek.ir

www.cargeek.ir

www.cargeek.ir

Body Seal

Process Area of Under Body Seal

Underfloor areas and sill outer panels should be processed with plasticizing **PVC** underfloor glue. This glue is not applicable to repeated use. When repairing the sealant for the underfloor areas, the underfloor glue upon delivery should be peeled off and returned to the proper breakpoint. Do expose the clean metal surface, and the current sealing edge should also be obedient to the panels.

Use new underpan glue between the primer and the second primer. If necessary, use the jointing sealant before applying the underpan glue. Before coating the underpan glue, do firstly fit the plugs and insulating ring on the disk type floor (except for the part for cere spraying). Refit the heat-fusible plugs damaged in repair with heat blower or replace them with rubber insulating ring.

Caution: Ensure that suspension units, wheels, tyres, power unit, exhaust and brakes (including all mounting points) are shielded prior to application of fresh underbody sealer.

Jointing Sealant

When the welding special joints during the assembly, it applies a kind of **PVC** sealant processed by thermofixation. This kind of material is not suitable for repair, so the approved jointing sealant should be used for check.

Jointing sealant is used after the primer spraying and before the second primer and the outer coat spraying. Jointing sealant must be sprayed smoothly and continuously, and the spraying line depends on the jointing type. If the sealant is coated by brush, pay special attention to keep the due cover area for welding. At the places needing sealant formation, cloths dipped in the solvent oil can be used to complete the required operations.

Do seal all the jointing need to process after each repair. The area away from the joggled joints often distorts when the vehicle is damaged. Thus, in the following repair and alignment, the sealant at this place is often met. Check all the jointing around the repaired area to see whether it is damaged, then process the damages as required, then coat new sealant. Specific steps are as follows:

Clean the affected jointing, re-process the exposed metal area with proper etch primer;

Coat proper sealant at the required places;

Process the affected area with acid-etch primer (underpan glue is also available), coating proper color paint film.

After the re-assembly or refit of parts is completed, if the jointing is plugged, then paste jointing sealant can be used to apply such jointing. After the panels are finished, the jointing can be plugged. Under this case, the sealant and paint can be coated after assembly. If the inlet is of proper size, coat the two sides of the repaired joints with jointing sealant. If the spray coating can be only operated to one side (such as compartment), then use cavity cere to process the affected compartment beam.

The jointing sealed with sealant when assembling is described in detail as below.

Caution: Look through all the joints near the fixed areas. If necessary, all the combined ,fixed or replaced areas should be sealed. These areas can't be ruined. Sealing could protect from waters and wind noises and so on. Before the final inspection, it is necessary to look through all the sealed areas.

www.cargeek.ir

www.cargeek.ir

Diagnostic

Leak Test

Overview

Where water leakage is involved, always adopt a logical approach to the problem using a combination of skill, experience and intuition. Do not reach a conclusion based only on visual evidence, such as assuming that a wet footwell is caused by a leak emanating from the windscreen. It will often be found that the source of the leak is elsewhere. Use of the correct procedure will increase the chance of locating a leak, however obscure it may seem.

Tools and Equipment

The following tools and equipment are recommended for the purpose of detection and rectification of water leaks:

1. Garden sprayer (hand-operated)
2. Wet/dry vacuum cleaner
3. Dry, absorbent cloths
4. Battery torch
5. Small mirror
6. Weatherstrip locating tool
7. Trim panel remover
8. Small wooden or plastic wedges
9. Dry compressed air supply
10. Hot air blower
11. Sealer applicators
12. Ultrasonic leak detector

During leak detection, the vehicle should be considered in three basic sections:

- The front interior space.
- The rear passenger space.
- The loadspace or boot.

Testing

From the information supplied by the customer it should be possible for the bodyshop operator to locate the starting point from which the leak may be detected. After the area of the leak has been identified, find the actual point of entry into the vehicle.

A simple and effective means in the first instance is an ordinary garden spray with provision for pressure and jet adjustment, which will allow water to be directed in a jet or turned into a fine spray. Use a mirror and a battery-powered torch (NOT a mains voltage inspection lamp) to see into dark corners.

The sequence of testing is particularly important. Start at the lowest point and work slowly upwards, to avoid testing in one area while masking the leak in another.

For example, if testing started at the level of the windscreen, any water cascading into the plenum chamber could leak through a bulkhead grommet and into the footwells. Even at this point it could still be wrongly assumed that the windscreen seal was at fault.

Another important part of identifying a water leak is by visual examination of door aperture seals, grommets and weatherstrips for damage, deterioration or misalignment, together with the fit of the door itself against the seals.

Note: Check the colour of the water around the leak. If the water is dirty, the leak is from under the vehicle. If the water is clean, it is from above.

Sealing

When the point of the leak has been detected, it will then be necessary to rectify it using the following procedure:

1. Renew all door aperture seals and weatherstrips which have suffered damage, misalignment or deterioration
2. Check all body seals to ensure that they are correctly located on their mounting flanges/ faces using a lipping tool if necessary
3. Dry out body seams to be treated using compressed air and/or a hot air blower as necessary
4. Apply sealant on the outside of the joint wherever possible to ensure the exclusion of water
5. When rectifying leaks between a screen glass and it's weatherstrip (or in the case of direct glazing, between the glass and bodywork), avoid removing the glass if possible.

   Apply the approved material at the appropriate location (i.e. glass to weatherstrip or glass to body)

Primary Door Seal Replacement

The primary door seals on the front and rear doors are bonded into position. It is imperative that the following points are adhered to when replacing a seal:

- The area of the door where the seal is to be bonded must be thoroughly cleaned. Do not use paint thinners for cleaning the door.
- The ideal temperature of the seal and door when bonding is 25°C(77°F). The seal will not bond properly if either the door or seal is below 18°C (64°F).
- When initially fitting the seal, apply only a light pressure, this allows the seal to be removed and repositioned if necessary. If repositioning the seal, do not touch or allow the contact surfaces to be contaminated in any way.

www.cargeek.ir

www.cargeek.ir

Service Procedures

Roof Panel

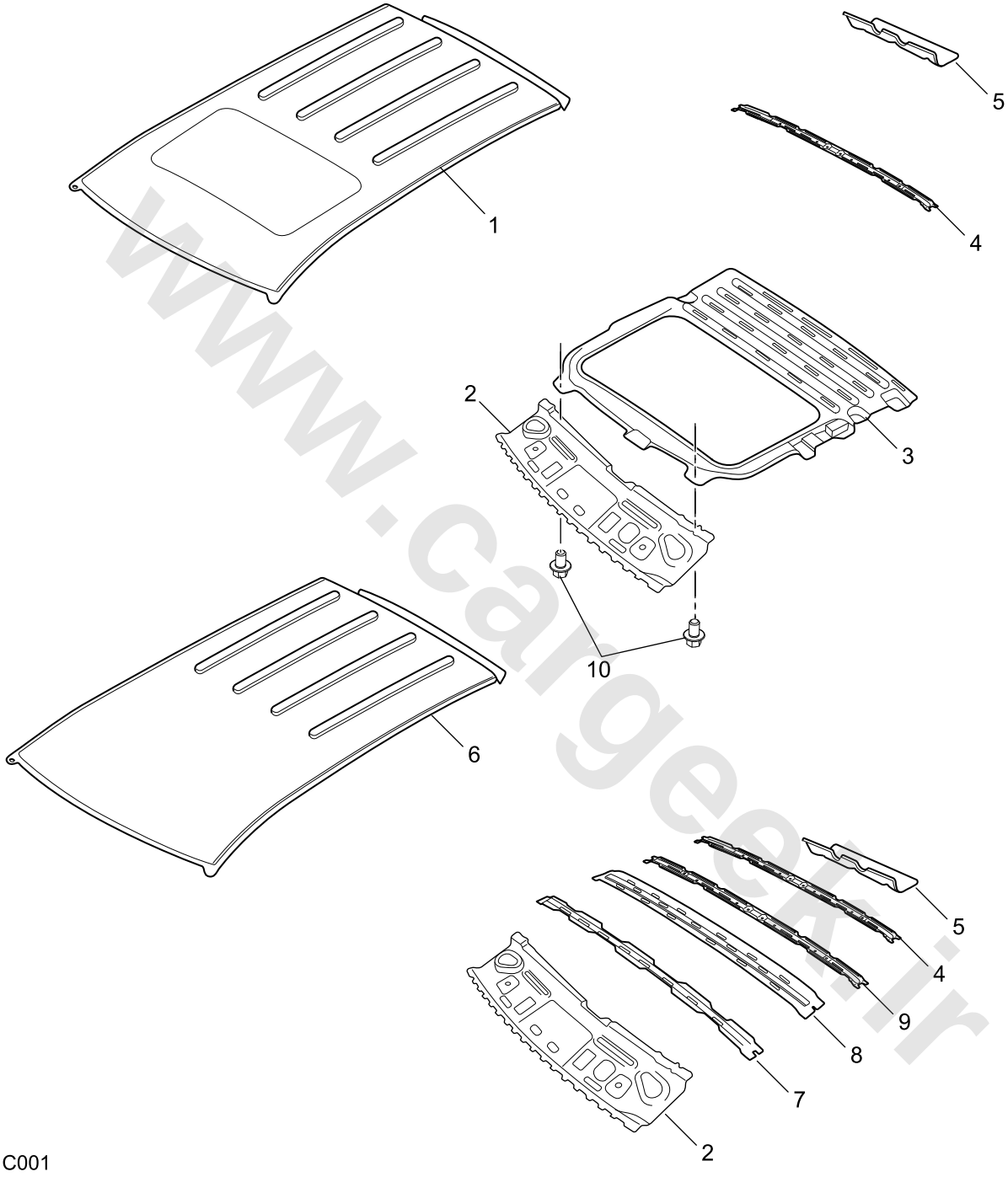

1. Sunroof Panel
2. Front Roof Beam Assembly
3. Sunroof Window Reinforcement Panel Assembly
4. Middle Roof No.3 Beam
5. Rear Roof Beam
6. Roof Panel
7. Middle Roof No.4 Beam
8. Middle Roof No.2 Beam
9. Middle Roof No.1 Beam
10. Bolt - Sunroof Assembly

www.cargeek.ir

www.cargeek.ir

Engine Compartment Panel

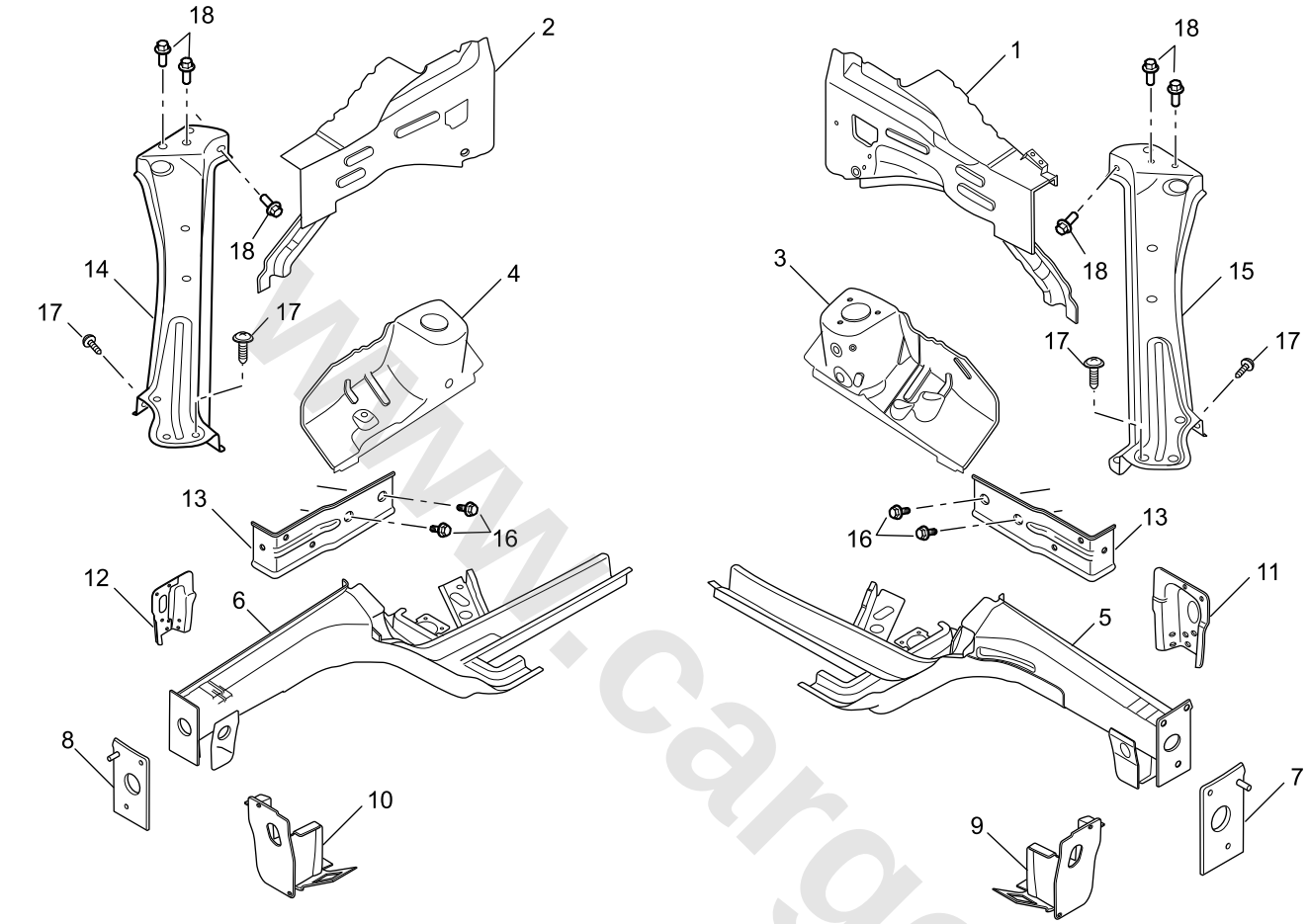

1. Front Wheelhouse Inner Upper Longitudinal Beam Assembly - LH
2. Front Wheelhouse Inner Upper Longitudinal Beam Assembly - RH
3. Front Tower Cover Plate Assembly - LH
4. Front Tower Cover Plate Assembly - RH
5. Front Longitudinal Beam Assembly - LH
6. Front Longitudinal Beam Assembly - RH
7. Front Longitudinal Beam Closing Panel Assembly - LH
8. Front Longitudinal Beam Closing Panel Assembly - RH
9. Front Subframe Mounting Bracket Assembly - LH
10. Front Subframe Mounting Bracket Assembly - RH
11. Front Subframe Rear Mounting Bracket Assembly - LH
12. Front Subframe Rear Mounting Bracket Assembly - RH
13. Front Headlamp Mounting Bracket Assembly
14. Upper Headlamp Mounting Bracket - RH
15. Upper Headlamp Mounting Bracket Assembly - LH
16. Bolt - Headlamp Bracket
17. Bolt - Headlamp Bracket
18. Bolt - Headlamp Bracket

www.cargeek.ir

www.cargeek.ir

Dash Panel

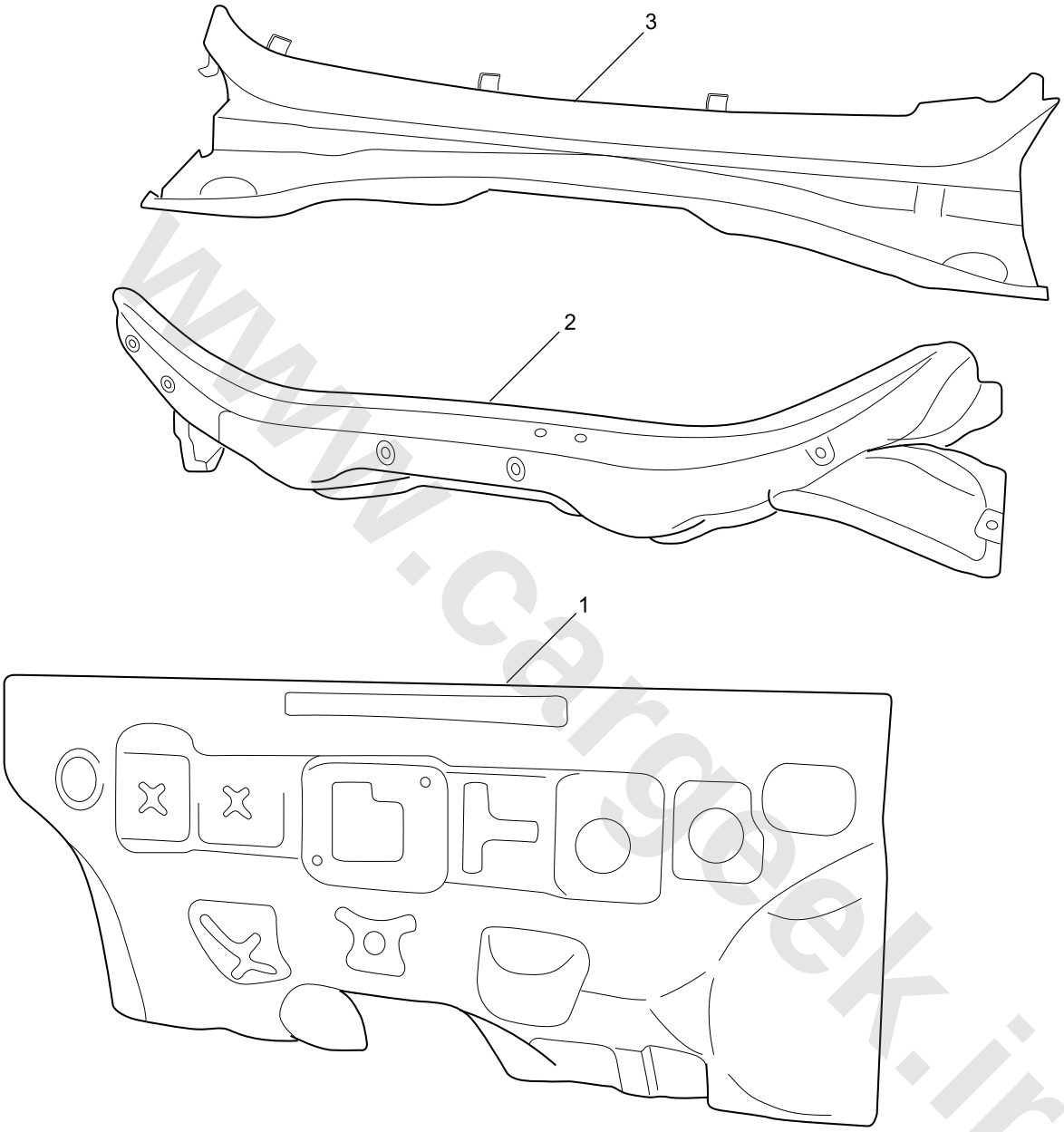

S511A001

1. Dash Panel Lower Beam Assembly
2. Dash Panel Lower Panel Assembly
3. Dash Panel Upper Panel Assembly

www.cargeek.ir

www.cargeek.ir

Bodyside Panel

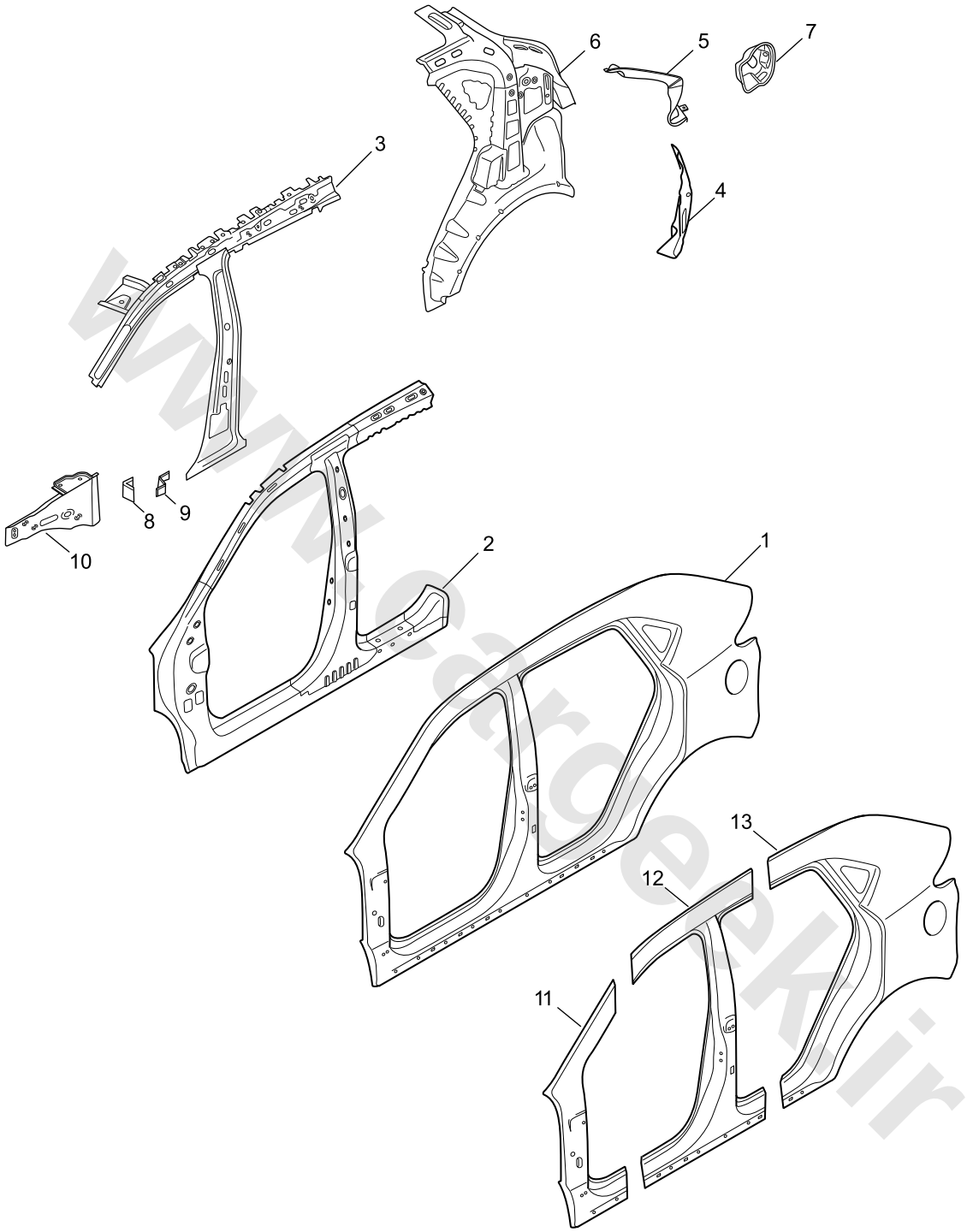

S521A001

1. Bodyside Outer Panel
2. Bodyside Reinforcement Panel Assembly
3. B/C Pillar Upper Closing Panel Assembly
4. Rear Bodyside Extension Panel
5. Drain Channel Extension Panel Assembly
6. Rear Bodyside and Rear Wheelhouse Panel Welding Assembly
7. Fuel Fill Housing Assembly
8. Lower Fender Bracket
9. Lower Fender Bracket
10. Front Outer Valance Panel Assembly
11. Front Bodyside Outer Panel
12. Middle Bodyside Outer Panel
13. Rear Bodyside Outer Panel

www.cargeek.ir

www.cargeek.ir

Front Floor

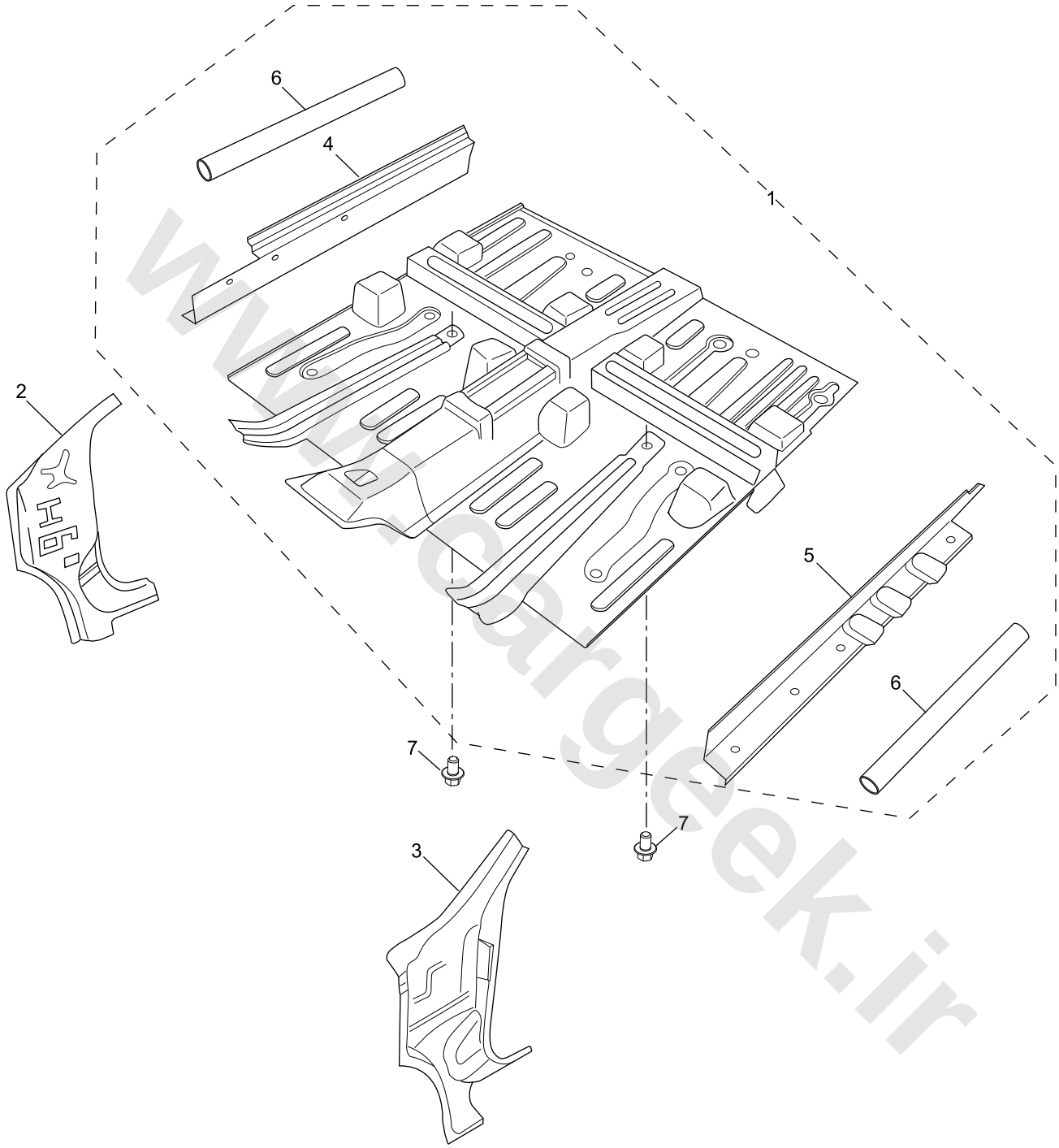

S512A001

1. Front Floor Assembly
2. A Pillar Closing Panel Assembly - RH
3. A Pillar Closing Panel Assembly - LH
4. Doorsill Inner Panel Assembly - RH
5. Doorsill Inner Panel Assembly - LH
6. Front Doorsill Inner Reinforcement Panel Assembly
7. Bolt - Front Floor Reinforcement Panel

www.cargeek.ir

www.cargeek.ir

Rear Floor

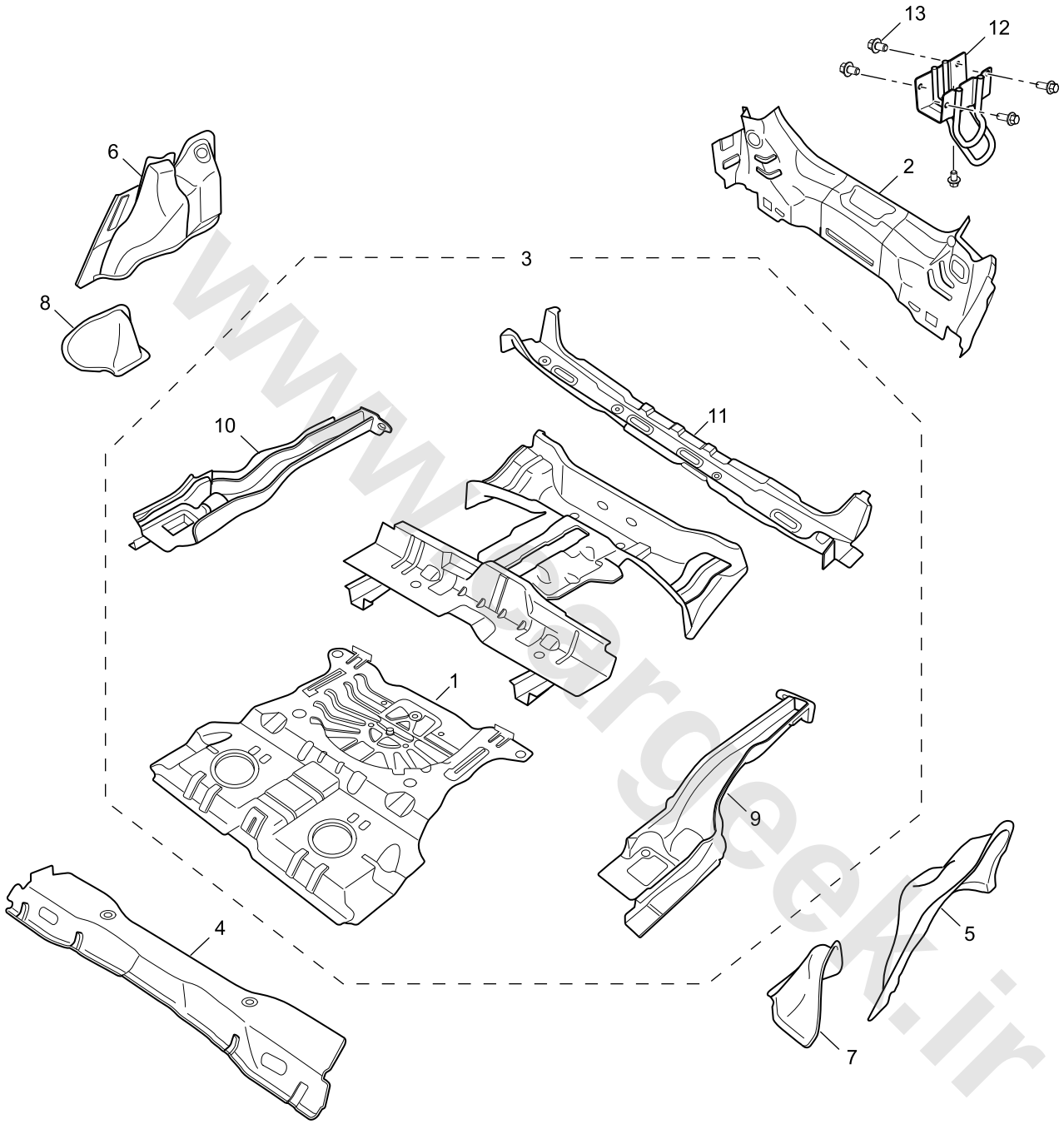

S513A001

1. Rear Floor Assembly
2. Rear End Panel Assembly
3. Rear Floor Frame Assembly
4. Rear Seat Supporter Assembly
5. Rear Wheelhouse Panel Assembly - LH
6. Rear Wheelhouse Panel Assembly - RH
7. Rear Wheelhouse Extension Panel - LH
8. Rear Wheelhouse Extension Panel - RH
9. Rear Longitudinal Beam Assembly - LH
10. Rear Longitudinal Beam Assembly - RH
11. Rear Floor Lower Cross Member Assembly
12. Towing Hook Assembly
13. Bolt - Rear Towing Hook

www.cargeek.ir

www.cargeek.ir

Door Panel Assembly

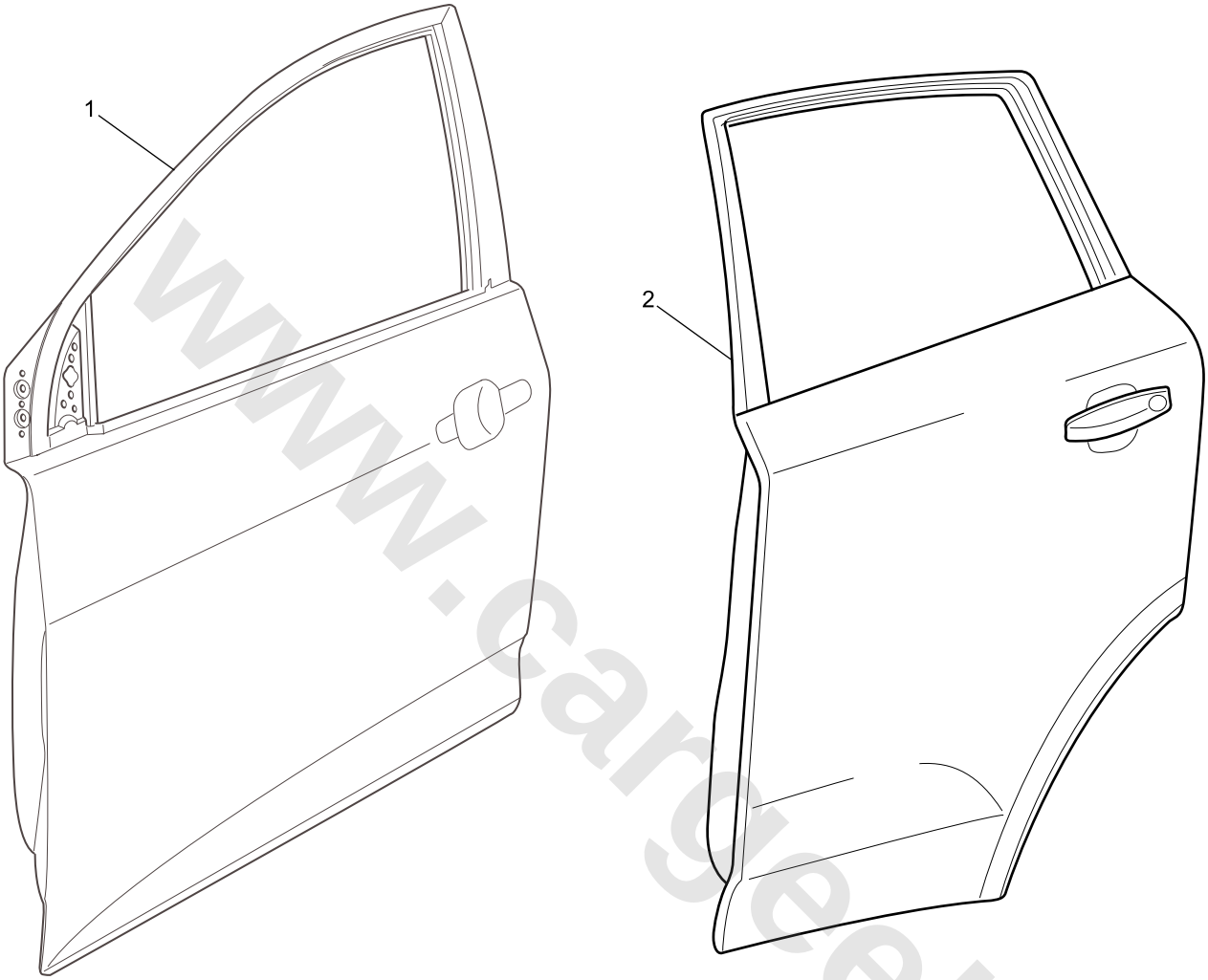

SC11A001

1. Front Door Panel Assembly
2. Rear Door Panel Assembly

www.cargeek.ir

www.cargeek.ir

www.cargeek.ir

Bonnet Panel Assembly

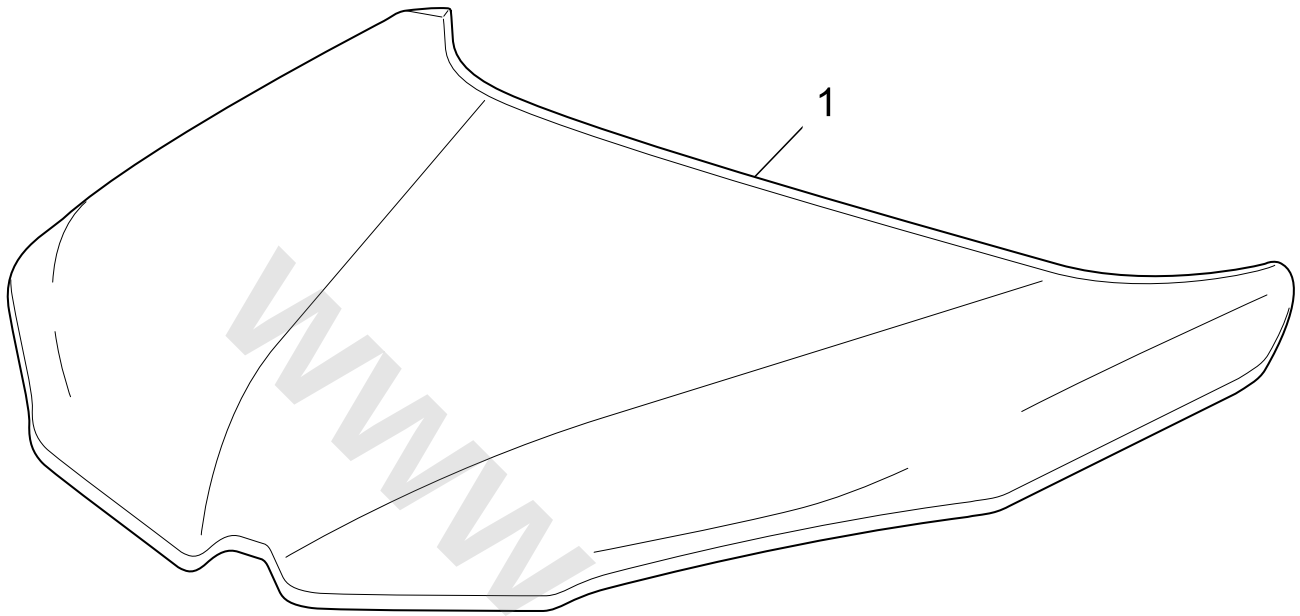

SC31A001

1. Bonnet Panel Assembly

www.cargeek.ir

www.cargeek.ir

www.cargeek.ir

Tail Gate Panel Assembly

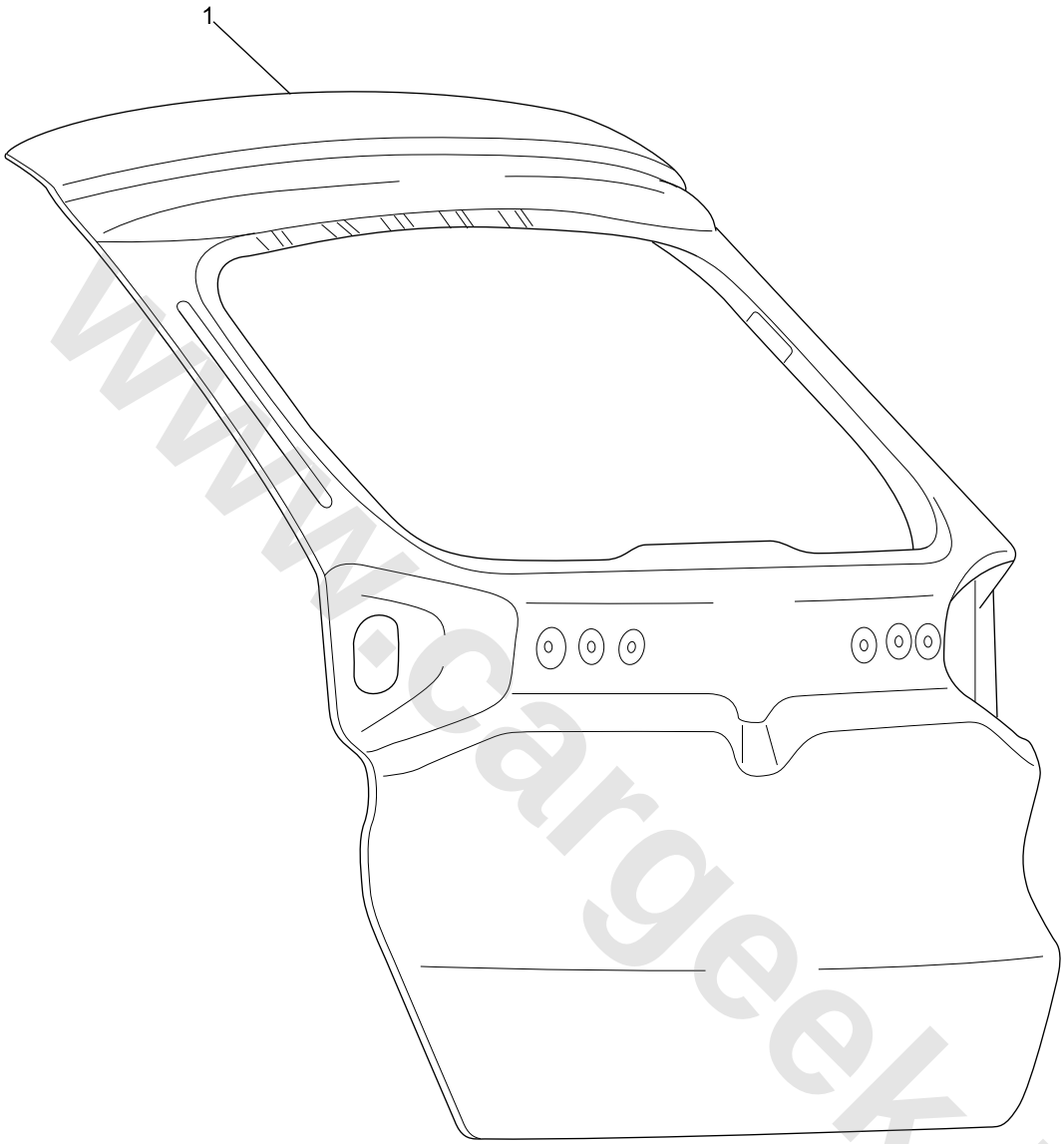

SC21A001

1. Tail Gate Panel Assembly

www.cargeek.ir

www.cargeek.ir

www.cargeek.ir

Vehicle Access

Specifications

Torque

Description	Value
Nut-A	7–9Nm

www.cargeek.ir

www.cargeek.ir

www.cargeek.ir

Description and Operation

System Layout

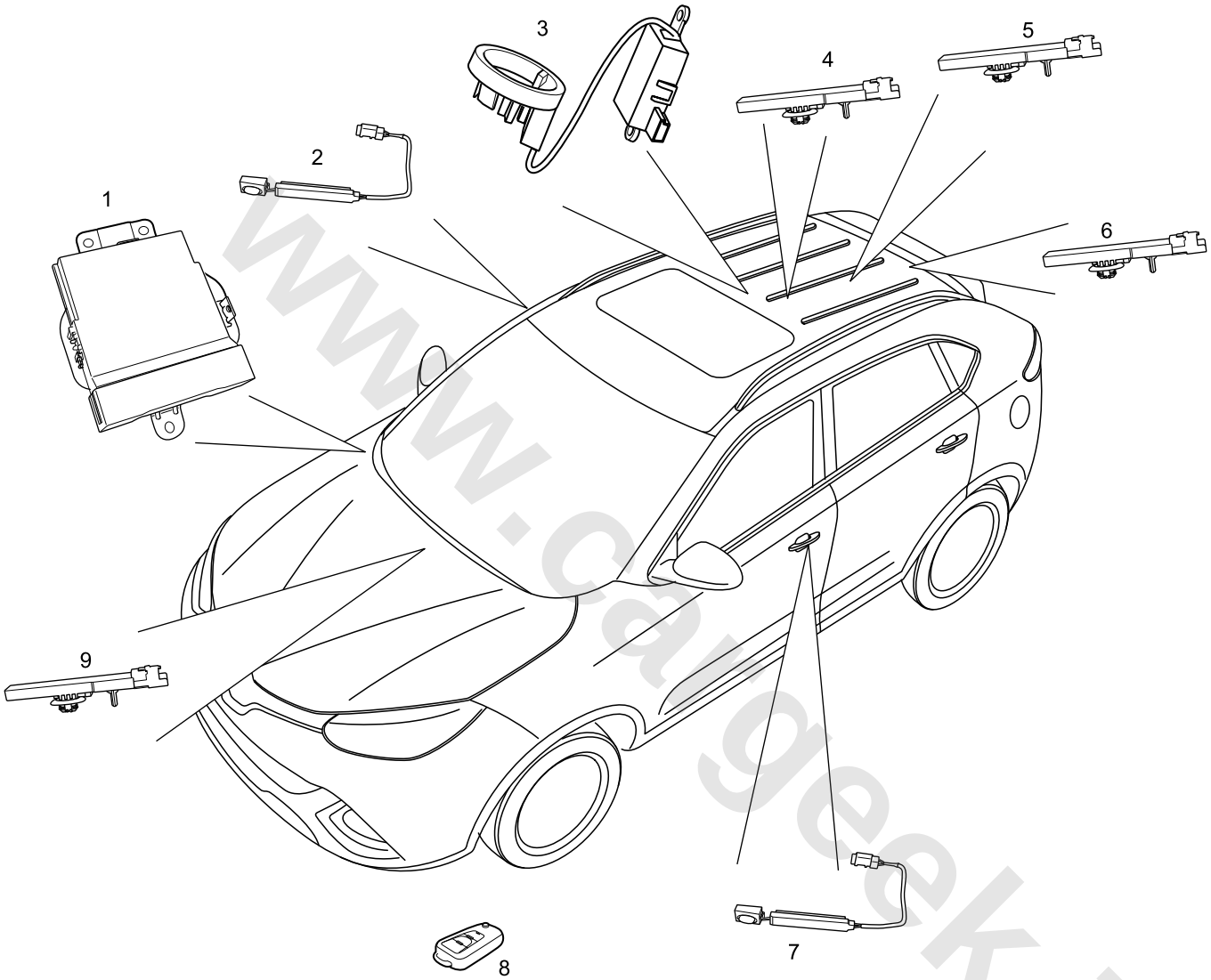

S8210001

1. PEPS Module
2. Outer Door Handle Antenna and Switch (HSU)
3. Spare Coil
4. LF Antenna - Central (behind center console bracket)
5. LF Antenna - Rear (on rear seat beam)
6. LF Antenna - Rear Bumper Skin
7. Outer Door Handle Antenna and Switch (HSU)
8. Remote Key
9. LF Antenna - Front (A/C Box Assembly)

www.cargeek.ir

www.cargeek.ir

System Control Diagram

Vehicle Access and Safety Control Diagram

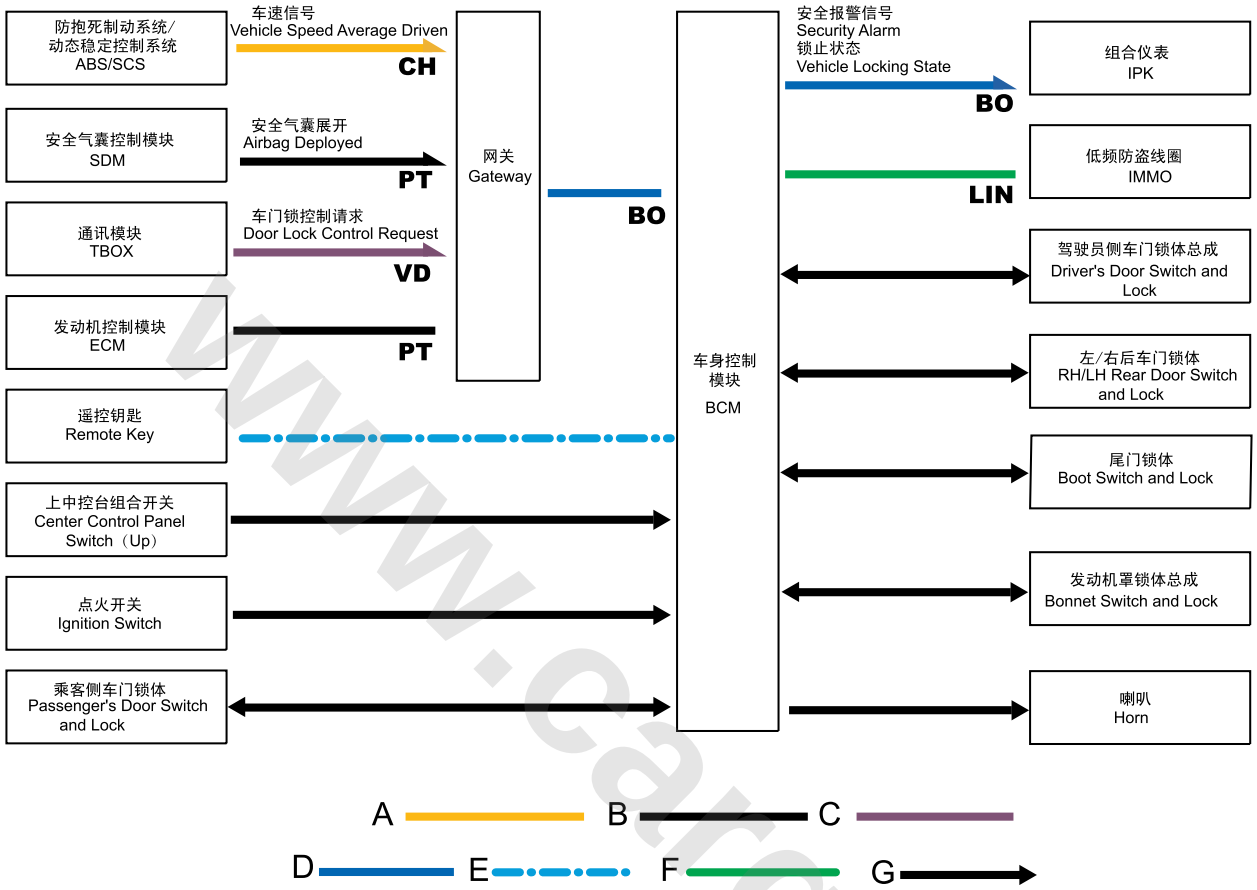

S8211001

A = Chassis HS CAN Bus; B = Power HS CAN Bus; C = Diagnostic HS CAN Bus; D = Body HS CAN Bus; E = RF Signal; F = LIN Bus; G = Hard Wire

www.cargeek.ir

www.cargeek.ir

PEPS Control Logic Diagram

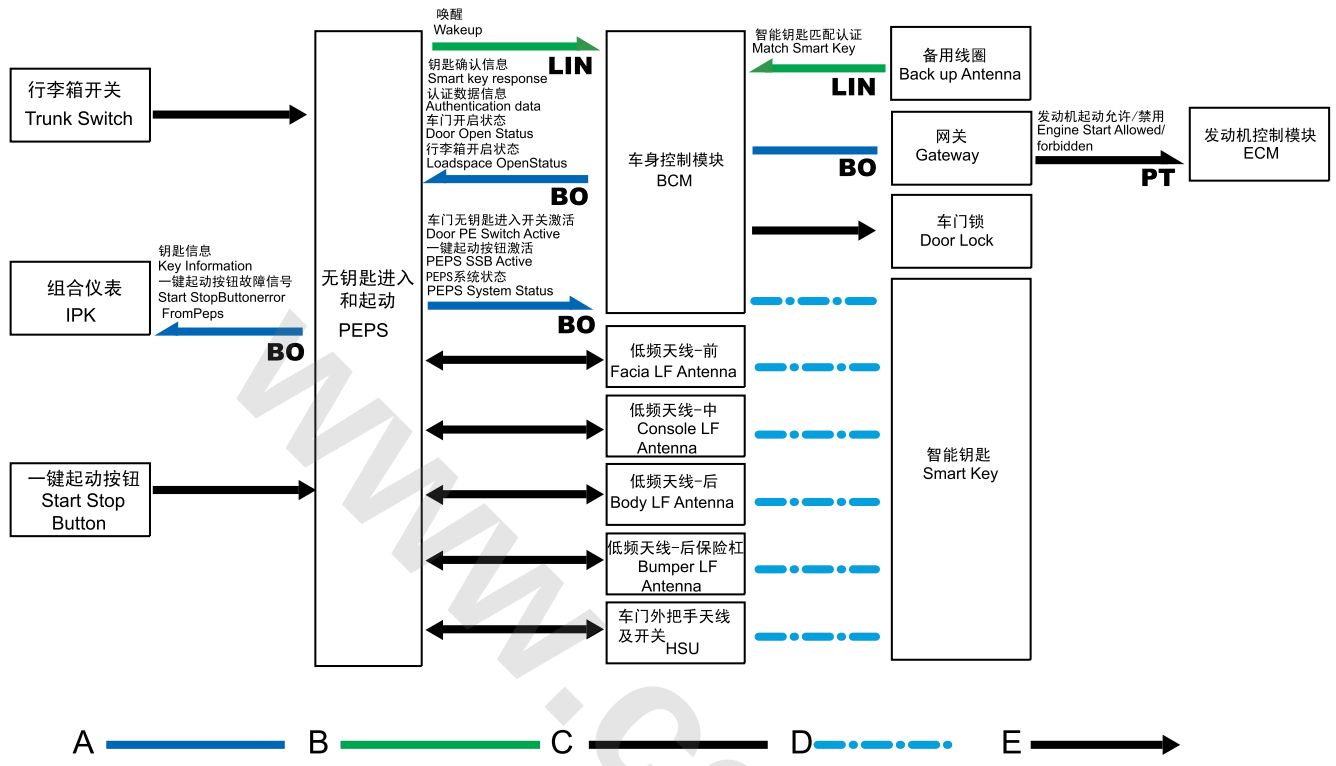

S8211002

A = Body HS CAN Bus; B = LIN Bus; C = Power HS CAN Bus; D = RF Signal; E = Hard Wire

www.cargeek.ir

www.cargeek.ir

Description

Overview

The security system can be operated by the radiofrequency signal of the remote key or by the mechanical key. The radiofrequency signal receiver receives demodulation signal and check signal, and the **BCM** decodes the signal and sends the corresponding operation signal through the **CAN** bus.

Operation of Security System

The security system consists of the following three parts:

1. Peripheral system:
   - Engine cover, door and tail gate release switch
   - 1st/2nd gear switch
   - Center console lock (unlock/lock) switch
2. Acoustic warning device: horn
3. Visual warning device: hazard warning lamp

The anti-theft system is composed of three independent areas, each contains a lot of discrete input signals (see the table below). Any intrusion of the security system can trigger the alarm when the system is working.

Safe zone	Discrete signal
1 (front)	• Engine cover switch
2 (central/internal)	• Driver door switch • Front passenger door switch • Rear left door switch • Rear right door switch • Driver door unlocked by key (timed for 15s) • Wrong key is inserted into 1st/2nd gear • Center console lock LOCK/UNLOCK switch
3 (rear)	• Tail gate release switch

Safe anti-theft status

When the 3 areas of the security system are all closed, if LOCK request from the remote control, mechanical key and PEPS, etc is received, the security system will fully enter into the anti-theft status. Once it fully enters into the anti-theft status, it will monitor all activated safe zones at all times. When the switch of zone 2 or 3 is turned on, if try to lock the vehicle from the outside, the vehicle will be partially locked and wrong lock warning will be sent.

BCM monitors the following LOCK request signals from the external device:

- Valid LOCK request from the remote key is received.
- Valid LOCK request from the PEPS module is received.
- Valid LOCK request from the driver door lock switch is received.

When the security system fully enters into the anti-theft status, the **BCM** will control the direction indicator lamp to give 3 flashes.

Full anti-theft status to partial anti-theft status

For full anti-theft status, if valid tail gate UNLOCK request is received, the **BCM** will open the tail gate, and the security system enters into partial anti-theft status.

Partial anti-theft status

If the wrong lock is caused by zone 1 only (for example, open engine cover), zone 2 and 3 will enter into full anti-theft status.

If the wrong lock is caused by zone 2 only (for example, 1 door or more are open), zone 1 and 3 will enter into full anti-theft status.

If the wrong lock is caused by zone 3 only (for example, open tail gate), zone 2 and 1 will enter into full anti-theft status.

Partial anti-theft status to full anti-theft status

When each zone is in the security system, the vehicle enters into full anti-theft status.

If the vehicle is partially locked due to open door, after the security system enters into the anti-theft status, the vehicle can be opened within 5s before close and no alarm will be triggered.

If the partial anti-theft status is caused by several zones, as long as the door/cover of the zone is closed, the zone enters into full anti-theft status. Only when all zones are in the full anti-theft status can the security system fully enters into the anti-theft status.

Wrong Lock Alarm

If the door (engine cover, tail gate) is open, and the ignition switch is in the 1st/2nd/3rd gear or the engine is working, etc, when the vehicle is locked from the outside by the mechanical key or remote key and the PEPS LOCK request is applied, the **BCM** will control the horn to indicate the wrong lock status by giving a warning of 30ms.

Disable the security system

Any of the following operations can cause the **BCM** to disable the security system:

- Valid UNLOCK request from the remote key is received.
- Valid UNLOCK request from the PEPS module is received.
- Valid UNLOCK request from the driver door switch is received.
- Valid emergency key is inserted into the ignition switch/shifted from the 1st gear to the 2nd gear.

www.cargeek.ir

www.cargeek.ir

Caution: *If the driver door unlock switch is stuck or the switch has a short circuit, the emergency key cannot be used to disable the alarm; while the remote key will not be effected.*

When the security system is disabled, the **BCM** will control the direction indicator lamp to flash.

Impact Sensor Activation/Unlock

When the impact sensor senses impacts, it will send UNLOCK request signal and the door will unlock automatically, but this does not apply to the situation when the vehicle is locked from the outside.

Automatic Relock

After being unlocked by the remote key, the vehicle will automatically return to the previous locked state if no operation is performed within 30s. In automatic relock status, if the ignition switch is in the "AUX" position or there is one valid key, cancel the current data of the relock timer and disable the automatic relock function.

Automatic Lock

With the driver door closed and the vehicle unlocked, the door will automatically lock after the vehicle speed reaches a certain value (preset).

Automatic Unlock

With the vehicle in an internally locked state, when the ignition switch is turned off, the vehicle automatically unlocks.

Door Lock Controlled by Center Console Switch

When the driver door is closed and the impact sensor is not triggered, press the center console lock LOCK button to lock all doors, and the main zone of the information center on the IPK will show "DOOR LOCKED".

With the vehicle in an internally locked state, press the center console lock UNLOCK button to open all doors, and the main zone of the information center on the IPK will show "DOOR UNLOCKED".

When the impact sensor is triggered by an impact, the door will unlock automatically. The door cannot be relocked by the center console lock LOCK button within the current ignition cycle. The center console lock button doesn't work in the externally locked state.

Unlock by Shifting to P Gear

When the vehicle is locked from the inside and the shift lever is in P gear, if turn off the ignition switch or remove the ignition key, the **BCM** will unlock the lock system automatically.

Lock by Leaving P Gear

When the vehicle is unlocked, the engine is started and the driver door is closed, if remove the shift lever from P gear, the **BCM** will lock the lock system automatically.

Panic Mode Alarm

When the vehicle is not locked from the outside, if the center console lock LOCK button is pressed for more than 2s, the **BCM** will activate the hazard warning lamp and horn.

When the vehicle is not locked from the outside, if the center console lock UNLOCK button is pressed for more than 2s or the vehicle is unlocked by the remote key, the **BCM** will disable the alarm.

Description of PEPS

Overview

For vehicles with PEPS, the traditional key is replaced by the intelligent key. The operation of the PEPS is achieved by LF/RF communication with the vehicle.

- Passive entry: no need to operate the intelligent key. Just carry the intelligent key with you, vehicle access can be achieved by pressing the door handle button directly and pulling the handle.
- Passive start: no need to insert/remove the key in a traditional way, just place the intelligent key in the car and press the SSB to start/stop the vehicle.

The PEPS system includes: PEPS **ECU**, intelligent key, interior LF antenna, outer door handle antenna and switch (HSU) and LF antenna of rear bumper skin.

Mounting position

- PEPS **ECU**: under the instrument panel at the front passenger side.
- Outer door handle antenna and switch (HSU): inside the front outer door handle.
- 3 vehicle LF antennas: fitted on the A/C box assembly, rear mounting bracket of the center console and center line of the rear seat beam respectively.
- LF antenna of rear bumper skin: on the center line of the rear bumper skin mounting bracket.

www.cargeek.ir

www.cargeek.ir

End View and Pin Information of PEPS Module Harness Connector BY126

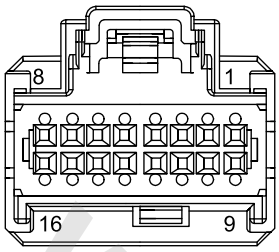

Pin No.	Description
1	KL.30
2	—
3	ACC Gear Status Signal
4	IGN Gear Status Signal
5	Body HS **CAN** Low
6	Body HS **CAN** High
7	—
8	—
9	—
10	—
11	—
12	—
13	SSB Signal
14	—
15	—
16	Ground

End View and Pin Information of PEPS Module Harness Connector BY127

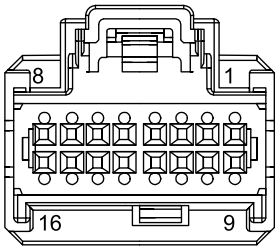

Pin No.	Description
1	—
2	—
3	—
4	—
5	—
6	Front LF Antenna Signal - Low
7	Central LF Antenna Signal - Low
8	Central LF Antenna Signal - High
9	—
10	SSB Reference Signal
11	Tail Gate Switch
12	—
13	—
14	Front LF Antenna Signal - High
15	Rear LF Antenna Signal - Low
16	Rear LF Antenna Signal - High

End View and Pin Information of PEPS Module Harness Connector BY128

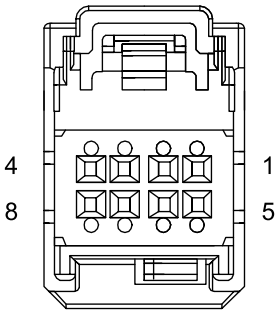

www.cargeek.ir

www.cargeek.ir

Pin No.	Description
1	—
2	Left Front Door Handle Antenna Signal - Low
3	Left Front Door Handle Antenna Signal - High
4	Signal of Rear Bumper Skin Antenna - Low
5	—
6	Right Front Door Handle Antenna Signal - Low
7	Right Front Door Handle Antenna Signal - High
8	Signal of Rear Bumper Skin Antenna - High

End View and Pin Information of PEPS Module Harness Connector BY129

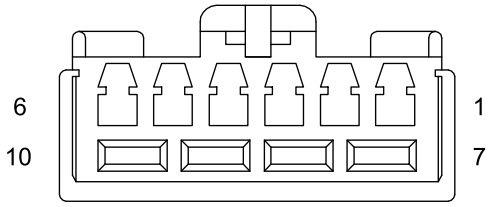

Pin No.	Description
1	—
2	—
3	—
4	**LIN**
5	—
6	—
7	—
8	—

Pin No.	Description
9	Ground
10	—

End View and Pin Information of HSU Harness Connector DD005

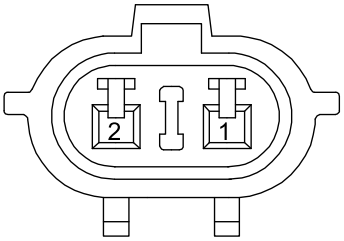

Pin No.	Description
1	Left Front Door Handle Antenna Signal - Low
2	Left Front Door Handle Antenna Signal - High

End View and Pin Information of HSU Harness Connector PD005

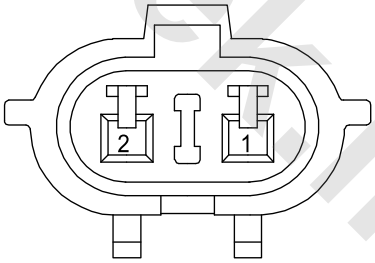

Pin No.	Description
1	Right Front Door Handle Antenna Signal - Low
2	Right Front Door Handle Antenna Signal - High

www.cargeek.ir

www.cargeek.ir

End View and Pin Information of Front LF Antenna Harness Connector FA040

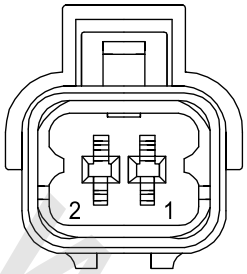

Pin No.	Description
1	Front LF Antenna Signal - Low
2	Front LF Antenna Signal - High

End View and Pin Information of Rear LF Antenna Harness Connector BY153

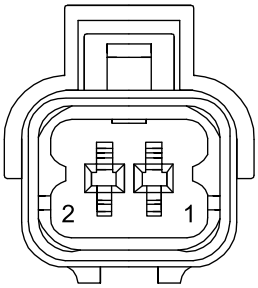

Pin No.	Description
1	Rear LF Antenna Signal - Low
2	Rear LF Antenna Signal - High

End View and Pin Information of Central LF Antenna Harness Connector BY062

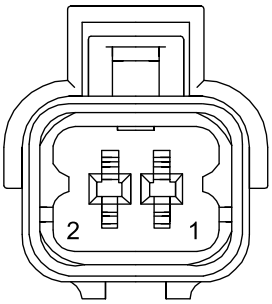

Pin No.	Description
1	Central LF Antenna Signal - Low
2	Central LF Antenna Signal - High

End View and Pin Information of Rear Bumper Skin Antenna Harness Connector BY130

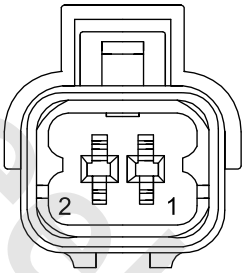

Pin No.	Description
1	Signal of Rear Bumper Skin Antenna - Low
2	Signal of Rear Bumper Skin Antenna - High

Operation of PEPS

The PEPS can detect and identify the intelligent key near the closed door and driver compartment.

Function of LIN Bus in PEPS

The interface of the **LIN** bus is used for communication between the PEPS **ECU** and the **BCM**. When the vehicle is stopped and locked, the **CAN** bus is in the sleep mode, it is required to wake up the **CAN** bus quickly and establish communication between the PEPS **ECU** and the **BCM**, and the communication is performed by the **LIN** bus. After the

www.cargeek.ir

www.cargeek.ir

outer door handle antenna and switch (HSU) are pressed, the PEPS **ECU** communicates with the RF signal receiver and identifies the intelligent key. If the intelligent key is correct, it sends UNLOCK request signal to the **BCM**.

Function of CAN Bus in PEPS

The PEPS communicates with other **ECU**s through the **CAN** bus.

Identifier/Intelligent Key

The intelligent key is a handheld electronic device powered by lithium battery. Each vehicle is provided with two intelligent keys. If the key matches the vehicle, the intelligent key can conduct LF/RF communication in the PEPS system. If the lithium battery can provide power, the intelligent key receives LF signal, communicates with the **BCM** and lock/unlock the vehicle properly.

The intelligent key detects the LF electromagnetic field signal (125kHz) from the vehicle LF antenna, outer door handle antenna and switch (HSU). When the intelligent key is in the area covered by the LF antenna, it will give a response by sending a RF signal within the wave band of 433MHz ISM.

Function of Intelligent Key in PEPS

The PEPS shall be provided with intelligent key.

Function of Intelligent Key for Vehicle Access

- PEPS (passive entry) mode: in the area covered by LF, the intelligent key receives LF signal and sends RF signal for authentication/matching.
- Remote key access mode: when the key button is pressed, the authentication code will be sent by the RF signal as the request for locking/unlocking the door or tail gate.
- Depletion mode of intelligent key lithium battery: the intelligent key is provided with the mechanical key used for the vehicle lock, the mechanical key can also be used to lock/unlock the vehicle.

Function of Intelligent Key for Vehicle Start

- PEPS (passive start) mode: the intelligent key receives LF signal and sends RF signal for authentication/matching.
- Low battery mode of intelligent key: the intelligent key shall be close to the spare coil (icon under the cup holder), refer to "Enable/Disable Key" section. The authentication here is achieved by the **BCM** which controls the intelligent key to work in the transponder mode.

In order to ask the operator to replace the battery in time, the intelligent key sends RF signal and the **BCM** will send the signal to the IPK, then the general information screen shows "Remote Key Battery Low, Please Replace!".

Once the button on the intelligent key is pressed, it will be considered by default as the RF request signal of the remote key. When the button is held for 20s, the intelligent key will stop sending RF signal until the button is pressed again after being released.

Intelligent Key/Identifier Management

The system only accepts 4 identifiers for one time.

In principle, two matching intelligent keys will be provided by the factory before delivery, and the intelligent key can be added or deleted during aftersales diagnosis. Addition and deletion of the intelligent key is the task of the **BCM**, the **BCM** will inform the PEPS **ECU** of the added new key or deleted old key.

Outer Door Handle Antenna and Switch (HSU)

The outer door handle antenna and switch (HSU) integrates the LF antenna and switch. It connects the PEPS **ECU**, and the PEPS **ECU** provides current for the LF antenna and allows it to form magnetic field. The PEPS **ECU** reads the switch status, i.e. detects the action of the operator. The PEPS **ECU** and HSU are connected by stranded wires.

Function of Outer Door Handle Antenna and Switch (HSU) in PEPS

The LF antenna is used to form a LF electromagnetic induction area in the vicinity of the vehicle so that the operator can lock/unlock the vehicle switch. Only when the matching intelligent key is detected in the LF antenna area and the LOCK/UNLOCK request received is consistent with the status of the vehicle door lock can the vehicle be locked/unlocked.

When the operator operates the HSU, the PEPS **ECU** will transfer current to the HSU LF antenna and allow it to generate electromagnetic field signal. The intelligent key of the operator can detect/receive this signal and give a response to the **BCM** via the RF signal, then the PEPS system verifies the key and unlocks the door eventually, this ensures legal access of the vehicle by authorized users.

HSU Area

Coverage of Door Handle Antenna: radiation is calculated by the center on the door handle surface (around 1.5m).

LF Antenna

The independent LF transmitter consists of 3 internal LF antennas and 1 rear bumper skin antenna. The transmitter provides LF magnetic field signal (125kHz) so that the intelligent key can receive the signal within the antenna coverage.

www.cargeek.ir

Function of LF Antenna in PEPS

LF antenna gives LF signal in the PEPS system and communicates with the intelligent key.

Internal LF Antenna

Internal LF antenna is an essential part for the passive start system, which provides LF signal for the intelligent key, and the intelligent key sends authentication information to the **BCM**, the engine can be started after the key is verified.

Internal LF antenna is also used to search the intelligent key in the driver compartment and check if the vehicle can be locked, this prevents the operator from leaving the intelligent key in the vehicle when locking the vehicle. When detecting the intelligent key is in the driver compartment, the vehicle will not be locked. However, the operator shall realize that the security system is weak at the moment. In fact, the function of internal LF antenna is to search the valid intelligent key in the vehicle. Therefore, the radiation of the antenna shall cover the entire interior of the vehicle. If the valid intelligent key can receive the signal from internal LF antenna and give responses, the intelligent key is in the driver compartment.

LF Antenna of Rear Bumper Skin

In the passive entry system, the LF antenna of the rear bumper skin is used to open the tail gate separately. But it cannot be used for passive start. Function of rear bumper skin antenna: it sends LF signal to the intelligent key in the vicinity of the tail gate, and the intelligent key returns the signal to the **BCM**. So the radiation of this antenna shall be in a smaller area near the luggage compartment. After the authentication required, the tail gate can be opened. When the key is outside the vehicle, the radiation of the bumper skin antenna is 1m away from the ground, inside a circle with a radius of 1.0 .

If the intelligent key in the vehicle gives a response to the rear bumper skin antenna, i.e. the key is detected by the LF signal from the internal antenna and rear bumper skin antenna, the key cannot unlock the tail gate or vehicle. Therefore, if the valid intelligent key gives responses to the signal from the rear bumper skin antenna, the key is close to the tail gate. Once the tail gate switch is pressed and the access is authorized, the **BCM** releases the tail gate switch.

SSB

The SSB is on the instrument panel of the driver compartment, which is used to start/stop the engine. When the engine cannot be started, select other power modes (ACC, IGN). The SSB is integrated with the backlight control, it informs the operator of the power mode and whether the conditions for starting the engine are met by shifting the internal yellow/green LED lamps.

The SSB contains two identical parts.

One connects the **BCM**, and the other connects the PEPS **ECU**. The PEPS **ECU** detects the second part, and the **BCM** receives the power status **CAN** information from the PEPS **ECU** and determines if it is shall be handled. If no fault occurs, these two parts work together.

Function of SSB in PEPS

The SSB is used to start/stop the engine or shift the vehicle to "ACC/IGN" position and indicate the power status of the vehicle.

The SSB is used for passive start, not for passive entry.

The authorized operator shall finish the following start requests :

- MT: depress the clutch.
- AT: shift the shift lever to P/N gear and depress the brake pedal.

Press the SSB to start the engine. When the engine is working and the vehicle speed achieves a certain value, press the SSB to stop the engine.

Spare Coil

The spare coil is integrated under the cup holder at the passenger side, which is an electric coil. The intelligent key and **BCM** communicate through the spare coil. The **BCM** provides modulated current (125kHz). When the intelligent key is near the electromagnetic field (125kHz) generated by the LF antenna, the intelligent key acquires power from the electromagnetic induction area and communicates with the special electronic component of the **BCM**. The communication allows the intelligent key to be authenticated. If the battery of the intelligent key is low, it can still communicate with the spare coil for the key can obtain power from the electromagnetic radiation of the spare coil.

Function of Spare Coil in PEPS

If the battery of the intelligent key is low, power for normal key authentication will be unavailable, and the transponder mode shall be enabled. When the intelligent key is close to the activated spare coil (see the mark under the cup holder at the passenger side), the system will identify and authenticate the key.

If the battery of the intelligent key can provide sufficient power and the key can receive the LF signal from the internal antenna, the transponder mode is not required and the spare coil will not be activated.

If the SSB is pressed, but the PEPS system does not detect and authenticate the intelligent key, the spare coil will be activated.

The spare coil is also used to match the key in the production line and add/delete the aftermarket key. The key authentication lasts for a few hundred milliseconds.

www.cargeek.ir

www.cargeek.ir

PEPS ECU

PEPS **ECU** includes system software which controls the PEPS.

The PCB of the PEPS **ECU** contains the interface circuit of all PEPS components and the communication interface of other vehicle controllers.

BCMand Peripheral Equipment

The RF signal from the intelligent key is received by the RF receiver in the **BCM**, in PEPS mode, the **BCM** will match and authenticate the current key. The PEPS function is achieved by the rapid communication between the PEPS **ECU** and the **BCM**.

Function of BCM in PEPS

The PEPS **ECU** communicates with the **BCM** via the **CAN** bus and **LIN** bus, the **LIN** bus provides quick wake-up and communication signals for the **BCM**, by this way, it realizes key authentication and PEPS function. The **BCM** informs the PEPS **ECU** of the door status through the **CAN** bus. In order to give response to the user's action, the **BCM** estimates the user's intention by sending door status information to the PEPS **ECU**.

www.cargeek.ir

www.cargeek.ir

www.cargeek.ir

Service Procedures

Add and Disable a Key

Key Addition

- For vehicles without SSB, ensure the key to be added is in the ignition switch and is in "ON" position. Place the unwanted key beyond the effective range (outside of the vehicle is recommended).
- For vehicles with SSB, ensure the key to be added is on the icon under the cup holder of the center console, for specific operation, please strictly follow the figure. Place the unwanted key beyond the effective range (outside of the vehicle is recommended).

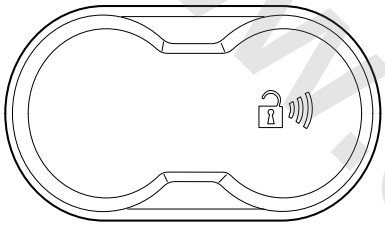

S8213006

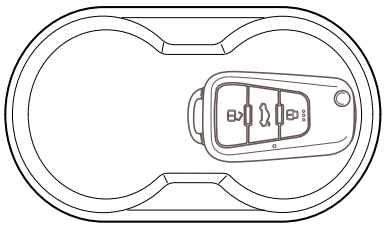

S8213007

Caution: *If the position and direction of the key are wrong, the key cannot be identified.*

Add the key.

☞**Self-learning and Adjustment, Programming and Coding - Key Addition**

Key Deletion

- For vehicles without SSB, ensure the key to be reserved is in the ignition switch and is in "ON" position. Place the key to be deleted beyond the effective range (outside of the vehicle is recommended).
- For vehicles with SSB, ensure the key to be reserved is on the icon inside the cup holder of the center console, for specific operation, please strictly follow the figure above. Place the key to be deleted beyond the effective range (outside of the vehicle is recommended).

Delete the key.

☞**Self-learning and Adjustment, Programming and Coding - Key Deletion**

For vehicles with PEPS, when the battery of the remote key is low, valid distance of the RF signal will be greatly shortened. To ensure normal start, please place the remote key on the icon inside the cup holder of the center console.

www.cargeek.ir

www.cargeek.ir

Passive Entry and Passive Start (PEPS) Control Module

Remove

1. Disconnect the battery negative.
2. Remove the glove box assembly.
   Glove Box Assembly Remove
3. Disconnect the connector (1) of PEPS module.
4. Remove 3 nuts (2) securing PEPS module to the vehicle body.

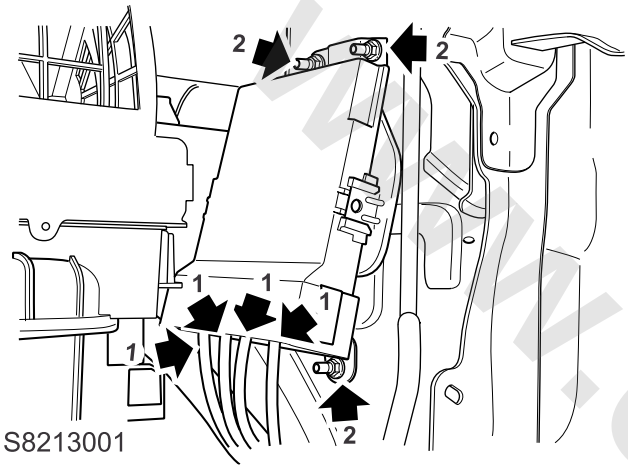

5. Remove PEPS module.

Refit

1. Fix the PEPS module to the body, fit 3 nuts, tighten to **7–9Nm** and check the torque.
2. Connect the connector of the PEPS module.
3. Connect the battery negative.
4. Programme and code the PEPS module.
   . Self-learning and Adjustment, Programming and Coding - PEPS Replacement
5. After replacement, fit the glove box assembly.
   Glove Box Assembly Refit

Passive Entry and Passive Start (PEPS) Antenna - Front

Remove

1. Disconnect the battery negative.
2. Remove the A/C panel.
   A/C Panel - ATC Remove
3. Disconnect the connector of the antenna.

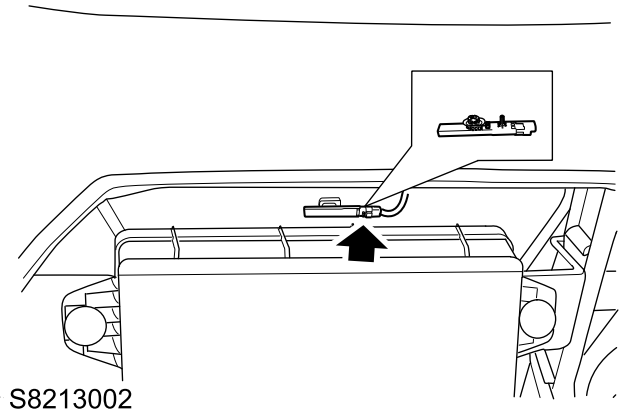

4. Slightly pull the connector outward to release the locating pin of the antenna from the mounting hole, then pull the antenna towards the connector to disconnect it.
5. Remove the antenna.

Refit

1. Align the antenna locating point at the mounting hole and press down to engage.
2. Connect the connector of the antenna.
3. Refit the A/C panel.
   A/C Panel - ATC Refit
4. Connect the battery negative.

www.cargeek.ir

www.cargeek.ir

Passive Entry and Passive Start (PEPS) Antenna - Middle

Remove

1. Disconnect the battery negative.
2. Release the clip fixing the rear panel assembly of the center console to the center console assembly.
3. Remove the rear panel assembly of the center console.
4. Disconnect the connector of the antenna.

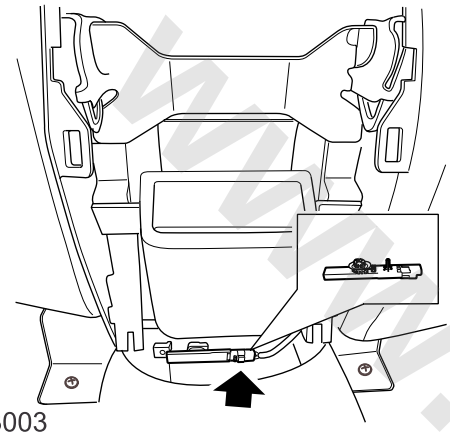

S8213003

5. Slightly pull the connector outward to release the locating pin of the antenna from the mounting hole, then pull the antenna towards the connector to disconnect it.
6. Remove the antenna.

Refit

1. Align the antenna locating point at the mounting hole and press down to engage.
2. Connect the connector of the antenna.
3. Refit the centre console rear panel assembly.
4. Connect the battery negative.

Passive Entry and Passive Start (PEPS) Antenna - Rear

Remove

1. Disconnect the battery negative.
2. Fold the rear seats and lift the luggage compartment carpet.
3. Disconnect the connector from the antenna.

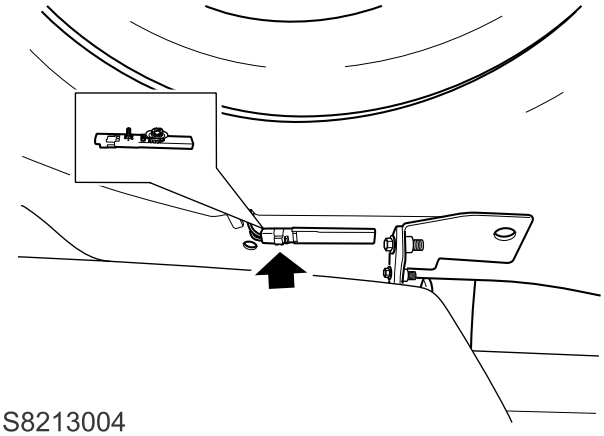

S8213004

4. Pull out gently at the side of connector to separate the locating pin of antenna from the mounting hole, then pull the antenna towards the connector to move it out.
5. Remove the antenna.

Refit

1. Align the antenna locating point at the mounting hole and press down to engage.
2. Lay the luggage compartment carpet, and recover the rear seats.
3. Connect the connector of the antenna.
4. Connect the battery negative.

www.cargeek.ir

www.cargeek.ir

Passive Entry and Passive Start (PEPS) Antenna - Rear Bumper Upholstery

Remove

1. Disconnect the battery negative.
2. Raise the vehicle to proper height.
3. Disconnect the connector from the antenna.

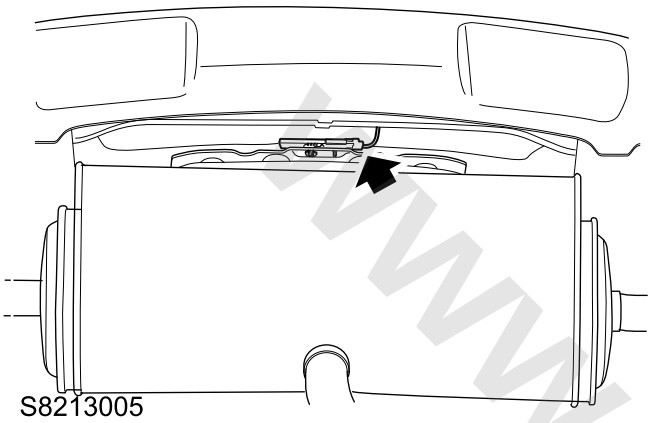

4. Remove the antenna fixed on rear bumper mounting bracket.

Refit

1. Align the antenna locating point at the mounting hole of rear bumper mounting bracket and press down to engage.
2. Connect the connector of the antenna.
3. Lower the vehicle.
4. Connect the battery negative.

Antenna for Keyless Entry and Start (PEPS) - Door Handle

Remove

For vehicles equipped with PEPS module, the antenna and switch (HSU) for exterior door handle are fitted in the exterior door handles at driver side and front passenger side respectively, replace the antenna for door handle by replacing the door handle assembly.

Exterior Door Handle Remove

Refit

Exterior Door Handle Refit

www.cargeek.ir

www.cargeek.ir

www.cargeek.ir

One-touch Ignition Switch

Remove

1. Disconnect the battery negative cable.
2. Remove the instrument panel moulding assembly.
3. Disconnect the harness connector at the back of one-touch ignition switch.
4. Release 2 clips fixing the one-touch ignition switch to the instrument panel moulding assembly, and remove the one-touch ignition switch.

Refit

1. Secure the one-touch ignition switch on the instrument panel moulding assembly with 2 clips.
2. Connect the harness connector at the back of one-touch ignition switch.
3. Fit the instrument panel moulding assembly.
4. Connect the battery negative cable.

Mechanical Ignition Switch

Remove

1. Remove the steering column shield.

☞ **Steering Column Shield Remove**

2. Remove 2 bolts fixing the steering column lock assembly to the steering column.

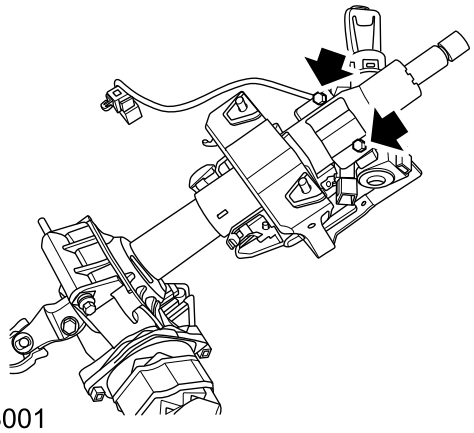

S7253001

3. Disconnect the harness connector of the anti-theft coil.
4. Release 2 clips fixing the IGN lock cylinder to the steering column lock assembly, and remove the lock cylinder of the mechanical ignition switch.

Refit

1. Fit the mechanical ignition switch lock cylinder to the steering column lock assembly, and secure it with 2 clips.
2. Connect the harness connector of immobilizer coil to the steering column lock assembly.
3. Fit the steering column lock assembly to the steering column and secure it with 2 bolts.
4. Fit the steering column shield.

☞ **Steering Column Shield Refit**

www.cargeek.ir

www.cargeek.ir

Alarm System

Description and Operation

System Layout

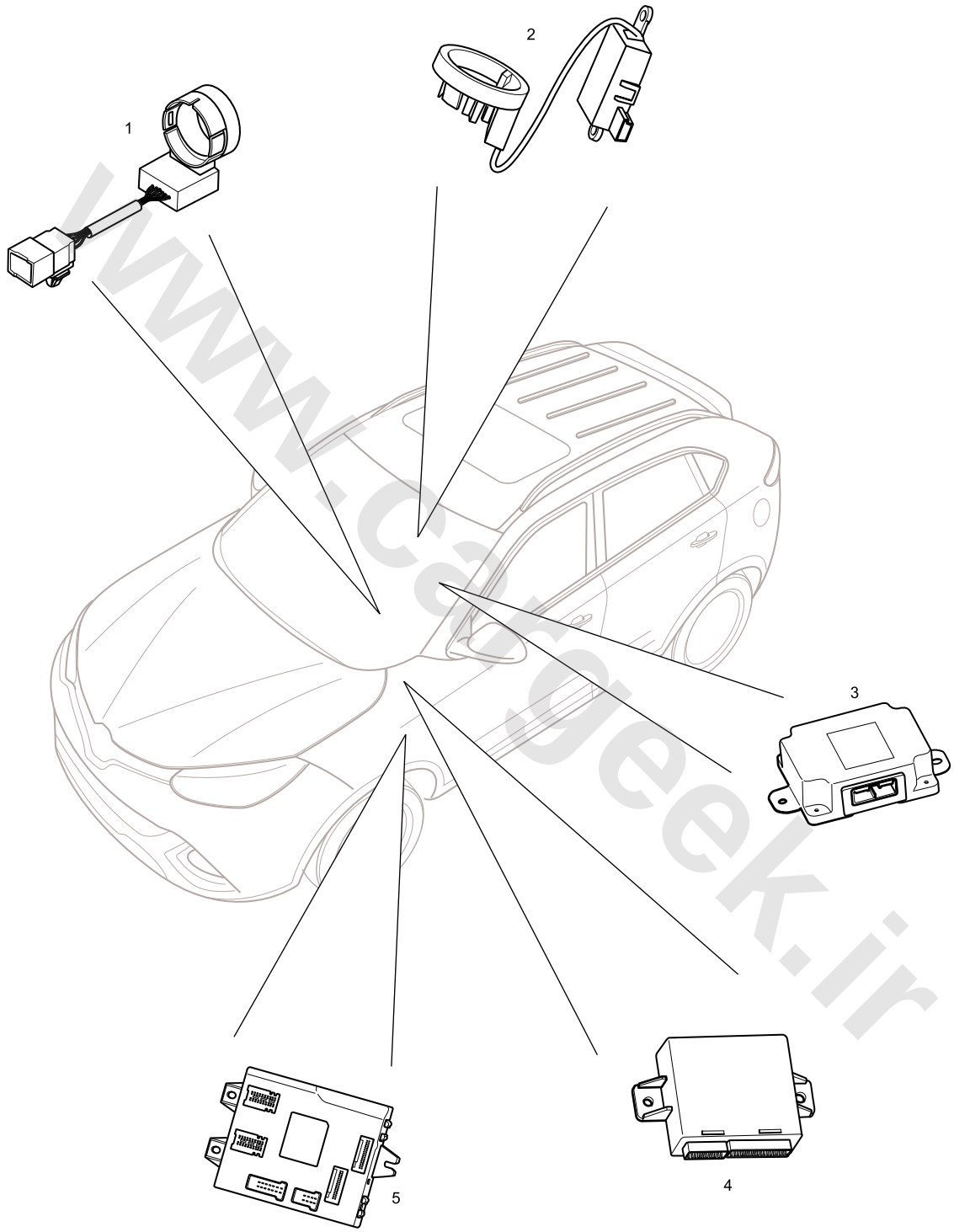

S8360001

1. LF Anti-theft Coil (if any)
2. Spare Coil (if any)
3. PMDC Module
4. GW Module
5. **BCM**

www.cargeek.ir

www.cargeek.ir

System Control Diagram

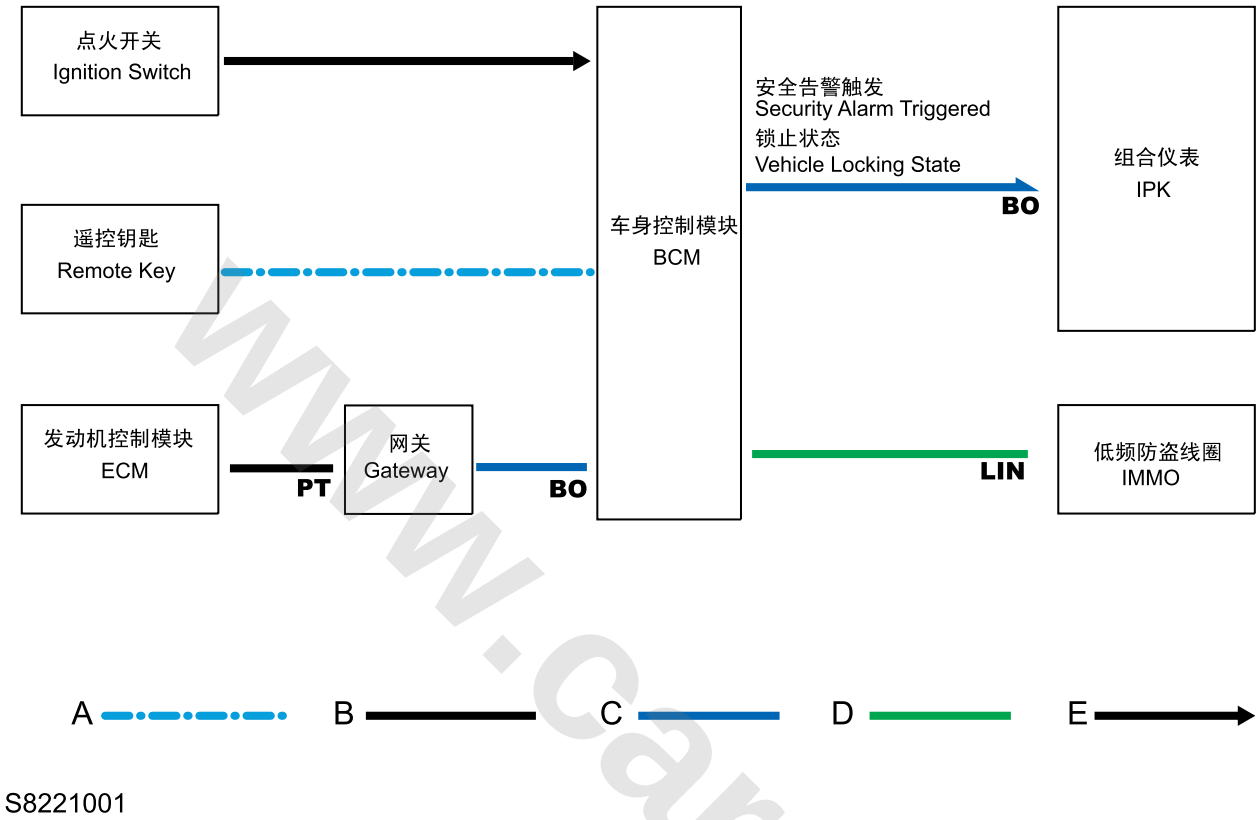

S8221001

A = RF Signal; B = Power HS CAN Bus; C = Body HS CAN Bus; D = LIN Bus; E = Hard Wire

www.cargeek.ir

www.cargeek.ir

Description

Overview

The vehicle is configured with an anti-theft system connected with the ECM. The characteristic value from the RF transceiver will be verified, if the value matches the corresponding data, the engine can be started. When the power is connected, the key sends the characteristic value to the LF anti-theft coil (if any)/spare coil (if any) and **BCM** through the serial data circuit of the **LIN**.

Mounting position

- LF anti-theft coil (if any): on the IGN lock cylinder.
- Spare coil (if any): under the cup holder at the passenger side (inside the center console assembly).

End View and Pin Information of LF Anti-theft Coil (if any) Harness Connector FA039

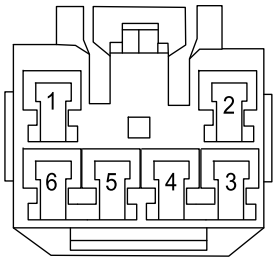

Pin No.	Description
1	—
2	KL.30
3	—
4	—
5	Ground
6	**LIN**

End View and Pin Information of Spare Coil (if any) Harness Connector CE008

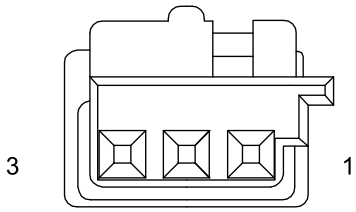

Pin No.	Description
1	**LIN**
2	KL.30
3	Ground

www.cargeek.ir

www.cargeek.ir

www.cargeek.ir

Operation

The function of the anti-theft system is provided by the **BCM**, **ECM** and modules which store and report environment identifiers.

- LF anti-theft coil: when the ignition key is inserted into the IGN lock cylinder and the ignition switch is in ON position, the RF transceiver of the key will be switched on by the LF anti-theft coil of the IGN lock cylinder. Then, the RF transceiver transmits a signal which contains its characteristic value. The **BCM** receives the signal and compares the value with that stored in the memory.
- Spare coil: for vehicles with SSB, when the intelligent key is put into the slot of the transmitter, the RF transceiver transmits a signal which contains its characteristic value. The **BCM** receives the signal and compares the value with that stored in the memory.

If the two values match, the **BCM** sends a pre-cancellation password to the **ECM** through the serial data circuit. If the characteristic value of the RF transceiver is wrong, the **BCM** sends fuel disable password to the **ECM**.

When the **ECM** receives the pre-cancellation password from the **BCM**, the **ECM** will verify the password. The **ECM** returns the password verified to the **BCM** through the serial data circuit. The **ECM** and **BCM** calculate the password.

If the result calculated by the **BCM** and **ECM** is consistent, the **ECM** will allow the vehicle to start.

www.cargeek.ir

www.cargeek.ir

www.cargeek.ir

Service Procedures

Low Frequency Anti-theft Receiving Coil

Remove

1. Disconnect the battery negative.
2. Disconnect the low frequency anti-theft coil connector and remove the clips securing the low frequency anti-theft coil to the instrument panel beam.
3. Remove the low frequency anti-theft coil from the steering column lock.

Refit

1. Fix the low frequency anti-theft coil on steering column lock. Allow 2 clips of the coil to fit in the relevant adapters of the steering column lock.
2. Connect the connector of low frequency anti-theft coil.
3. Fit the clips of low frequency anti-theft coil to the instrument panel beam holes.
4. Connect the battery negative.

Backup Coil

Remove

1. Disconnect the battery negative.
2. Remove the center console assembly.
   ☞Center Console Assembly Remove
3. Remove 5 screws fixing the center console air duct to the center console.

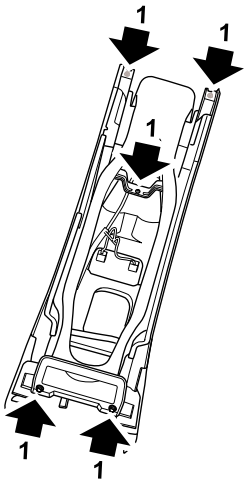

S8223002

4. Disconnect the connector of the spare coil (1).
5. Remove 2 screws (2) fixing the spare coil to the center console.

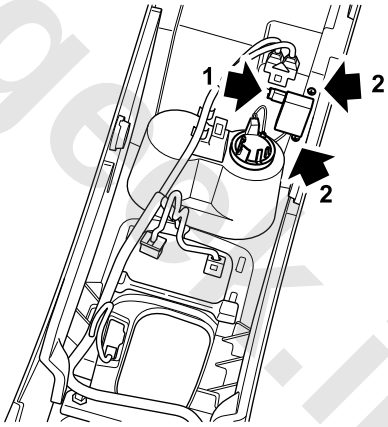

S8223001

6. Slightly turn the coil to remove the spare coil.

Refit

1. Put the backup coil in the mounting position, slightly rotate to secure it.
2. Connect the connector of backup coil.
3. Fix the centre console air duct to the centre console, then fit 2 screws on its both sides respectively and tighten.
4. Fix the centre console air duct to the centre console, then fit 1 screws in the middle and tighten.
5. Refit the centre console assembly.
   ☞Centre Console Assembly Refit
6. Connect the battery negative cable.

www.cargeek.ir

www.cargeek.ir

Gateway

Specifications

Torque

Description	Value
Nut-A	7–8Nm

www.cargeek.ir

www.cargeek.ir

www.cargeek.ir

Description and Operation

System Layout

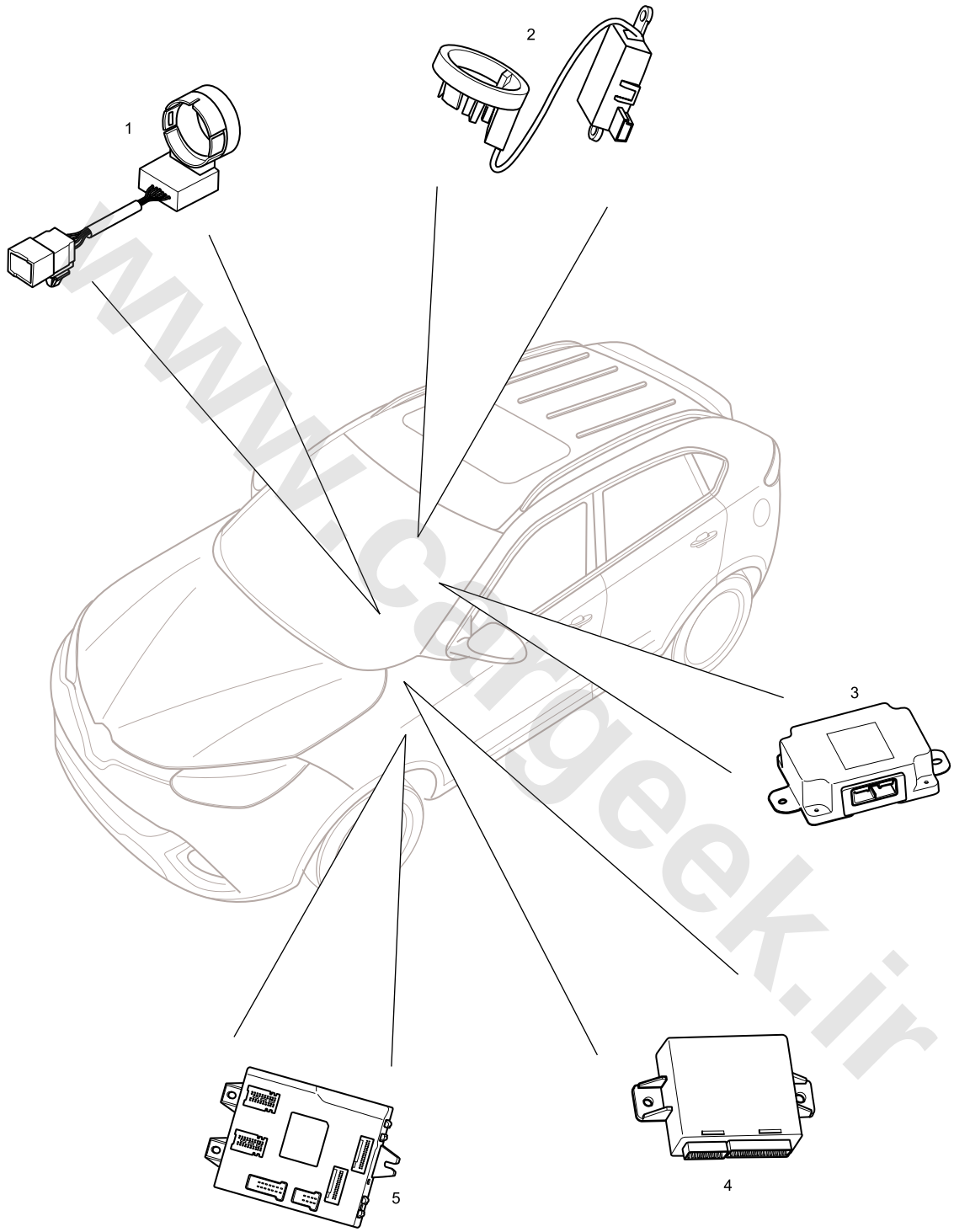

S8360001

1. LF Anti-theft Coil (if any)
2. Spare Coil (if any)
3. PMDC Module
4. GW Module
5. **BCM**

www.cargeek.ir

www.cargeek.ir

Description

Mounting position

The GW is before the lower closure plate of the driver side instrument panel.

Overview

The GW transmits most of the body function signals and communicates with the TBOX through the **CAN** bus, with the cruise control switch through hard wire and with the RPND through the **LIN** bus.

By the HS **CAN** bus, the GW communicates and interacts with the following parts:

- Engine Control Module (**ECM**)
- Transmission Control Module (**TCM**)
- Shifter Control Unit (**SCU**)
- Transfer Case Control Module (**TCCM**)
- Airbag Control Module (**SDM**)
- Slip Control System (**SCS**)/Anti-lock Braking System (**ABS**)
- Parking Distance Control (**PDC**)
- Electronic Parking Brake (**EPB**)
- DHL Module
- Steering Angle Sensor (**SAS**)
- Electronic Power Steering (**EPS**)
- PMDC
- Heating, Ventilation and Air Conditioning Module (**HVACM**)
- Entertainment Control Module FICM
- Instrument Pack **IPK**
- PEPS
- Body Control Module (**BCM**)

End View and Pin Information of GW Harness Connector FA004

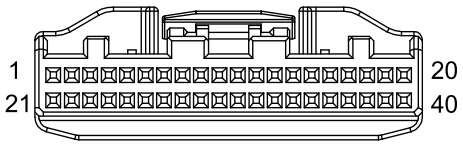

Pin No.	Description
1	Chassis HS **CAN** Low
2	Chassis HS **CAN** High
3	—
4	Power HS **CAN** Low
5	Power HS **CAN** High
6	—
7	Multimedia HS **CAN** Low
8	Multimedia HS **CAN** High
9	—
10	—
11	Body HS **CAN** Low
12	Body HS **CAN** High
13	Cruise Switch Input Signal
14	5V Power for KL.15
15	—
16	Brake Pedal Sensor Signal
17	KL.50
18	Ignition Switch Analog Output
19	—
20	—
21	—
22	**LIN**1
23	—
24	Steering Wheel Shift Paddle Switch + Input
25	—
26	Steering Wheel Shift Paddle Switch - Input
27	—
28	Snow Mode Switch Input (DCT250 only)
29	—
30	—
31	—
32	—
33	Shift Panel Shift Paddle Switch Input (DCT250 only)
34	—
35	Brake Pedal Sensor Ground
36	Brake Pedal Sensor Power
37	Cruise Switch Ground
38	Cruise Switch 1 Position Input
39	—
40	Cruise Switch 2 Position Input

www.cargeek.ir

www.cargeek.ir

End View and Pin Information of GW Harness Connector FA005

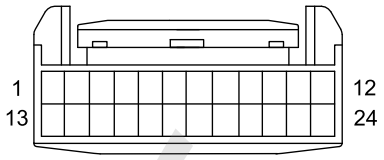

Pin No.	Description
1	Wake-up Enable High Side Driver Output
2	—
3	—
4	KL.15 Relay High Side Driver Output
5	—
6	KL.R High Side Driver Output
7	KL.15 Relay High Side Driver Output
8	KL.R High Side Driver Output
9	KL.R PEPS Input
10	KL.R BCM Input
11	KL.15 PEPS Input
12	KL.15 BCM Input
13	—
14	—
15	—
16	—
17	—
18	—
19	—
20	—
21	Ground
22	Ground
23	KL.30
24	KL.30

Definition

The GW connects several **CAN**/**LIN** networks and realizes signal/frame routing of the network. It also provides input/output interface for the hard wire and realizes some controls. The GW provides the following functions:

1. Network Signal Routing
2. Network Management Master Node
3. Vehicle Power Mode Management Master Node
4. Switch Detection
5. Vehicle Configuration Information

Network Signal Routing

The function of the GW is to establish connection between different **CAN** network and **LIN** network, transmit signals from the source **CAN**/**LIN** network to the target **CAN**/**LIN** network according to the requirements for network design and realize information exchange and sharing among multiple networks. In addition, the GW supports vehicle remote diagnosis performed by the TBOX.

Network Management Master Node

As a network management master node, the GW meets the following requirements for network management:

- When the ignition switch is in "ACC", "RUN", "CRANK", all networks shall communicate.
- When the ignition key is shifted to "OFF" position from "ACC" or "RUN" position, the network communication shall delay for 30s, and this time can be configured by diagnosis. If the vehicle speed is not 0, the GW shall maintain network communication; when the vehicle speed achieves 0, the GW shall maintain network communication for 10s.
- The GW performs VCT network management strategy on **CAN** 3 and **CAN** 5. As a network management master node, on the node of **CAN** 3 and **CAN** 5, the GW can wake up the network to communicate via the network.

Vehicle Power Mode Management Master Node

- The GW is the master node for the vehicle power mode management. The GW determines the status of the vehicle power mode according to the status of the ignition key or hard wire input of the ignition key from the **BCM** and PEPS. The GW sends the status of the vehicle power mode to the **CAN** or **LIN** network. Each **CAN** or **LIN** module shall receive the status signal of the power mode from the GW, and the **CAN**/**LIN** module enables/disables the corresponding function according to the signal.
- The GW increase/decrease the corresponding high side driver according to the status of the vehicle power mode. The high side driver of KL.R, Ignition, KL.15 switch is the relay control. When it increases, the corresponding relay closes.

www.cargeek.ir

www.cargeek.ir

Vehicle Power Mode	KL.R High Side Driver	IGN High Side Driver	KL.15 Switch High Side Driver	ACC Wake-up High Side Driver	Wake-up Enable High Side Driver
OFF	Low	Low	Low	Low	Low
ACC	High	Low	Low	High	High
RUN	High	High	High	High	High
CRANK	Low	High	Low	Low	High

- Vehicle Voltage Detection: the GW collects battery voltage, determines the status of the battery voltage and transmits the voltage signal to the network.

Switch Detection

- The shift paddle switch: the vehicle is provided with 2 shift paddle switches, one is on the shift handle, the other is on the steering wheel. The GW collects the status signal of the shift paddle switch and transmits the signal to the transmission control unit.
- Shift mode switch: it consists of the snow mode switch and sport mode switch, and the GW collects the status signal of the shift mode switch and transmits the signal to the transmission control unit.
- Cruise switch: the GW collects the reliable status signal of the cruise switch and transmits the signal to the engine control unit.
- Collection of brake pedal sensor signal: the GW collects the signal of the brake pedal sensor and transmits the position signal (%) of the brake pedal to the transmission control unit and voltage control unit. The GW shall perform a self-learning for the zero output voltage of the brake pedal before identifying the position of the brake pedal.

Vehicle Configuration Information

When the vehicle leaves the assembly line, the GW configures the vehicle configuration information online and saves the information to the **EEPROM** of the GW. The GW sends the vehicle configuration information to the network as per the information in the **EEPROM**.

www.cargeek.ir

www.cargeek.ir

www.cargeek.ir

Service Procedures

Gateway Module

Remove

1. Disconnect the battery negative.
2. Remove the driver side instrument panel lower closing panel.
   Remove of the Driver Side Instrument Panel Lower Closing Panel
3. Disconnect the connector (1) from the gateway.
4. Remove 2 nuts (2) securing the gateway to the instrument panel beam.

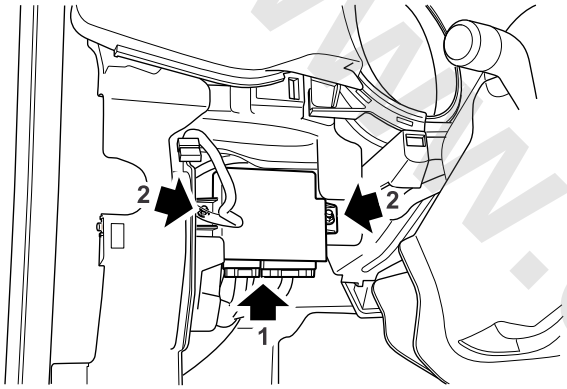

S8363002

5. Remove the gateway.

Refit

1. Connect the connector of the GW.
2. Connect the battery negative.
3. Programme and code the GW.

Self-learning and Adjustment, Programming and Coding - GW Replacement

4. Fix the GW to the bolt of the instrument panel beam, fit 2 nuts, tighten to **7–8Nm** and check the torque.
5. Fit the lower closure plate of the driver side instrument panel.
   Driver Side Instrument Panel Lower Closure Plate Refit

www.cargeek.ir

www.cargeek.ir

Seat Belts

Specifications

Torque

Description	Value
Bolt-front seat belt height adjuster	30–35Nm
Bolt-front seat belt retractor to 'BC' post	30–35Nm
Bolt-front seat belt'D'loop to front seat belt height adjuster	30–35Nm
Bolt-front seat belt to 'BC' post	30–35Nm
Bolt-front seat belt buckle	35–45Nm
Bolt-rear seat belt retractor to body	30–35Nm
Bolt-rear seat belt'D'loop to body	30–35Nm
Bolt-rear seat belt to body	30–35Nm
Bolt-rear middle seat belt to body	30–35Nm
Bolt-rear seat belt buckle	40–50Nm

www.cargeek.ir

www.cargeek.ir

www.cargeek.ir

Description and Operation

System Layout

Seat Belt Layout

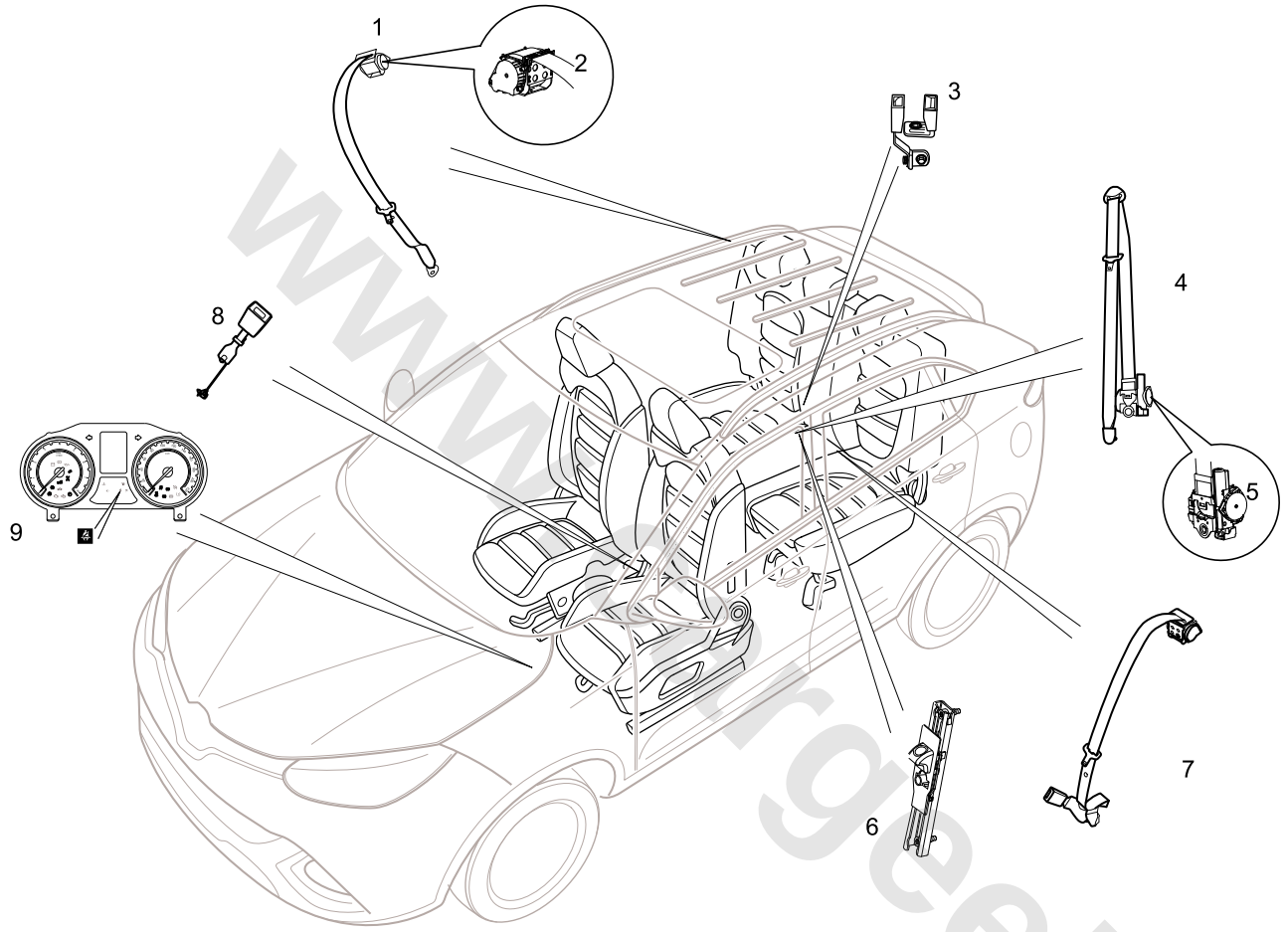

S4610001

1. Rear Seat Belt Assembly
2. Rear Seat Belt Retractor
3. Rear Seat Belt Buckle
4. Front Seat Belt Assembly
5. Front Seat Belt Retractor with Pretensioner
6. Front Seat Belt Height Adjuster Assembly
7. Rear Seat Central Belt and Buckle
8. Driver Seat Belt Buckle (with Alarm Function)
9. Seat Belt Not Tied Warning Lamp

www.cargeek.ir

www.cargeek.ir

System Control Diagram

Seat Belt Control Diagram

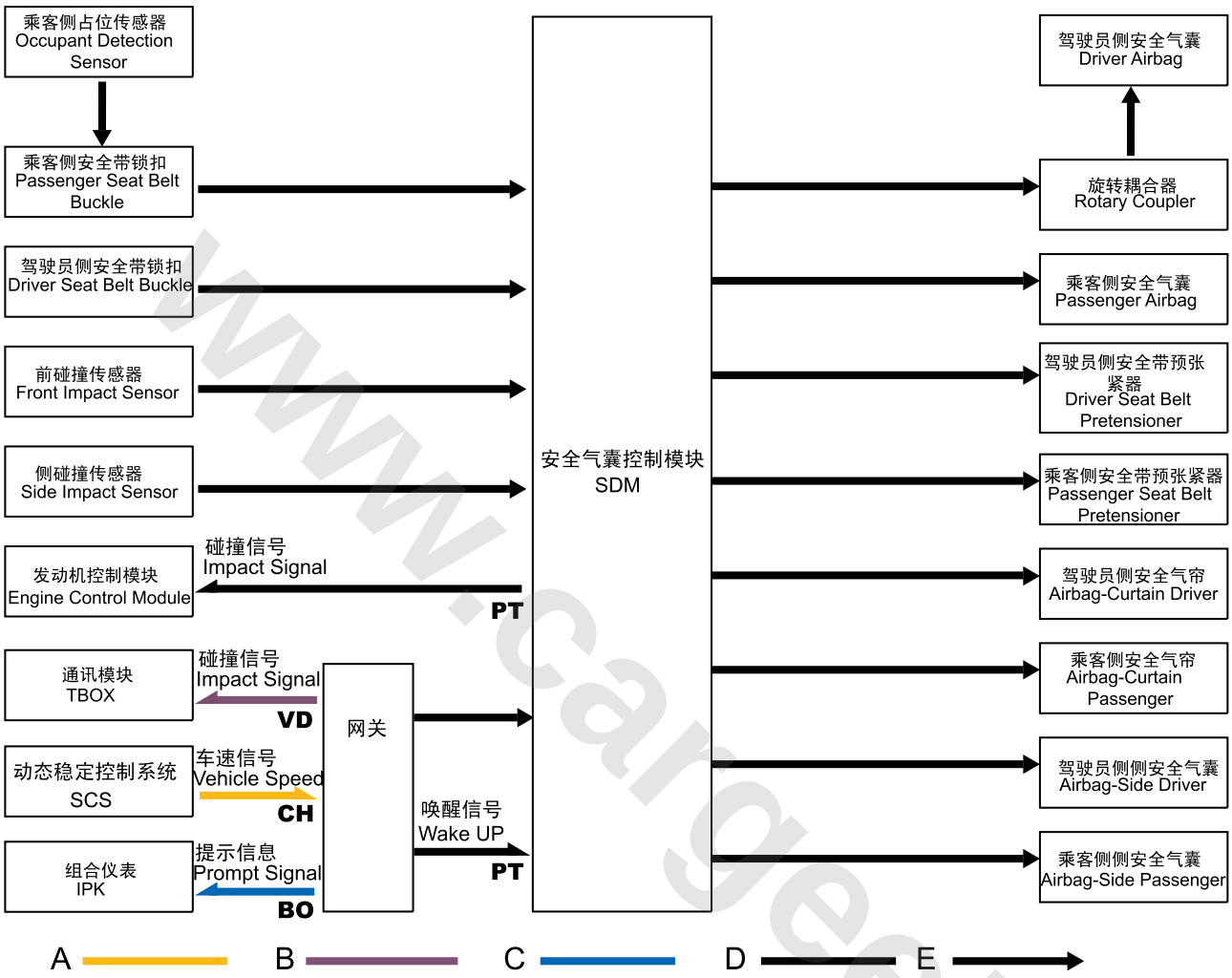

S8111002

A= Chassis HS CAN Bus; B= Diagnostic HS CAN Bus; C= Body HS CAN Bus; D= Power HS CAN Bus; E= Hard Wire

www.cargeek.ir

www.cargeek.ir

Description

Front Seat Belt Pretensioner

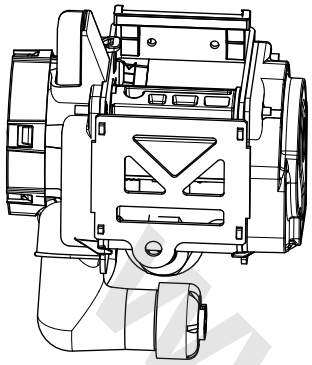

S4613010

In case of collision, the front seat belt pretensioner tightens, this ensures the occupants are securely kept in their seats. The seat belt pretensioner unit is fixed by bolts to the seat belt retractor assembly in the B pillar. The seat belt pretensioner connector is a 2-pin connector connected with the body harness.

In case of collision, the seat belt pretensioner is controlled by the signal from **SRS ECU**. The retractors of the two pretensioners are positioned and work in the same way. Each pretensioner unit is provided with an initiator and a propulsion generator which act on the rotor of the seat belt retractor.

Warning: Once the pre-tensioner has been operated, it cannot be reset. The gas generator will be exhausted. The unit must be replaced.

Seat Belt

The seat belts provide the most basic protection for all occupants. The restraint system also provides further protection for the front occupants through the airbag module and the pretensioning seat belts. The front seats are all fitted with appropriate retractors and three-point belts. The **ELR** is used for the vehicle.

The retractor is provided with an additional lock mechanism which includes a webbing sensor and an automotive sensor. If the webbing is suddenly pulled, the webbing sensor will immediately start the lock mechanism. If the vehicle is suddenly slowed down or tilts at a large angle, the automotive sensor will start the lock mechanism.

The retractor will lock in case of impact, so the front seat belt retractor are equipped with load limiters. If the load limit has exceeded the critical level, the load limiter makes seat belts webbing loose, so that the loads acting on the occupants are reduced.

Front Seat Belt

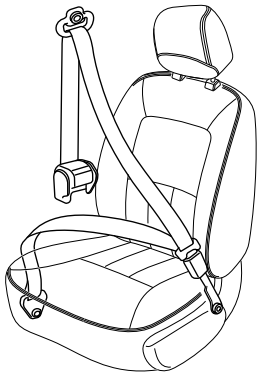

The retractor of the front seat belt is fitted on the body, in the cavity at the bottom of the B pillar lower trim panel. Pull the belt webbing from the retractor, and fix it to the mounting point under the B pillar with the manual height adjustment device on the upper part of the B pillar.

Seat Belt Height Adjuster Assembly

The seat belt height adjuster assembly is fixed by bolts to the upper B pillar. The belt webbing is fixed by D rings to the height adjuster assembly, and the seat belt can be fixed to the optimal position under different conditions by the up-and-down sliding of the height adjuster assembly. The belt buckle assembly is fitted to the interior trim panel bracket of the seat cushion.

Rear Seat Belt Assembly

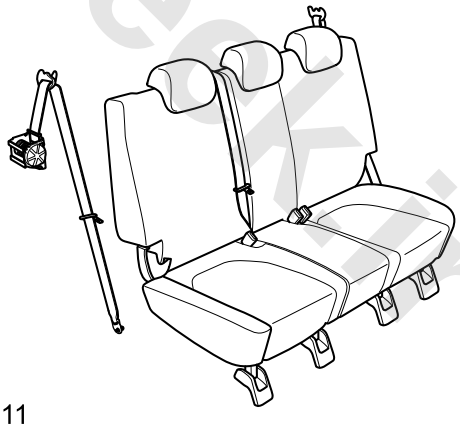

S4613011

The retractor of the rear seat belt is fixed by bolts to the BIW behind the side trim panel of the luggage compartment. The side webbing can be pulled out from the retractor axle through the trim of the D pillar trim panel, the other end of the webbing is secured on the mounting point of the body floor, and the central belt retractor of the rear seat is fixed on the frame of the rear seat foam. The central webbing can be pulled out from the seat retractor axle, and the other end of the webbing is fixed on the body floor under the rear seat cushion.

www.cargeek.ir

www.cargeek.ir

The left belt buckle and central belt buckle of the rear seat are fixed by 2 bolts to the floor under the rear seat cushion. The left belt buckle is located at the occupant's right hip.

The right belt buckle and central belt buckle of the rear seat form an assembly which is fixed by one bolt between the right rear seat and the central rear seat. The belt of the central passenger seat goes from the passenger's right shoulder to the buckle of the left hip.

Seat Belt Warning

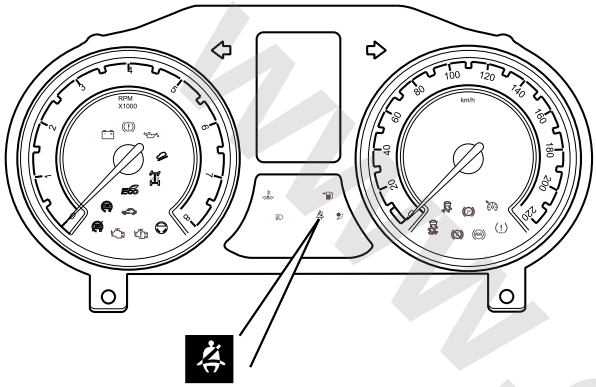

S4613000

The front seat belt buckles are integrated with the seat belt not tied warning switch, which is connected to the instrument pack through **SRS ECU**. The seat belt warning will be triggered if the seat belt is not tied firmly during driving. The warning message comprises an acoustic alarm and a warning lamp on the instrument panel. To prevent unnecessary warning, some vehicle specification specifies that a pressure sensor shall be fitted within the foam of the passenger seat when there is no passenger on the seat. If there is any passenger on the seat, but the pressure sensor is not activated, then the seat belt warning will not be triggered even if the occupant does not wear the seat belt.

www.cargeek.ir

www.cargeek.ir

Operation

SRS ECUtriggers the operation of pre-tensioning seat belt:

- For the front seat belt, the initiator and propulsion generator in the seat mounting lock catch assembly actuates the rotor of seat belt inertial retractor to tighten the seat belt and increase the tension, so that the passengers can be restricted on the seat in the event of the collision.

www.cargeek.ir

www.cargeek.ir

www.cargeek.ir

Service Procedures

Front Seat Belt Height Regulator

Remove

1. Remove the key from the ignition switch, and disconnect the battery positive and negative (disconnect the ground first). Wait for 10 min until the **SRS** backup circuit is discharged.
2. Remove the B pillar upper trim panel.

☞ **B Pillar Upper Trim Panel Remove**

3. Remove 1 bolt fixing the front seat belt D ring to the height adjuster.

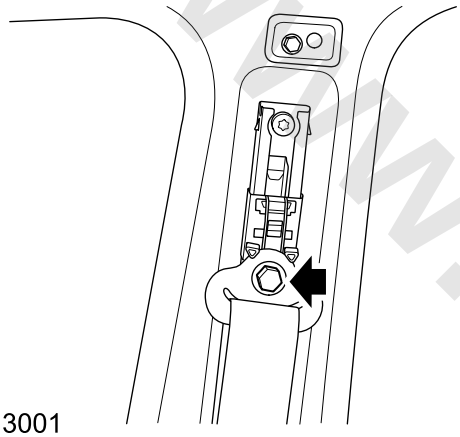

S4613001

4. Remove 1 bolt fixing the front seat belt height adjuster to the body.

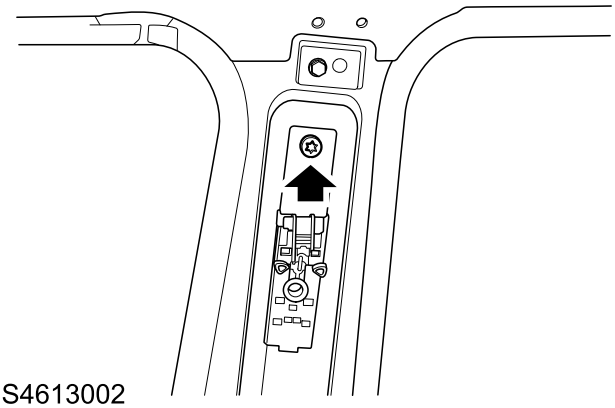

S4613002

5. Remove 2 hooks of the front seat belt height adjuster from the B pillar mounting hole, and remove the front seat belt height adjuster.

Refit

1. Insert 2 hooks under the height adjuster of the front seat belt into the mounting hole on the B pillar.
2. Fix the height adjuster of the front seat belt to the vehicle body, fit 1 bolt and tighten to **30–35Nm**.
3. Fix the D ring of the front seat belt to the height adjuster.
4. Fit the B pillar upper trim panel.

☞ **B Pillar Upper Trim Panel Refit**

5. Check the system, rotate the ignition switch, and check whether the **SRS** warning lamp illuminates for 6s, and then goes out.

www.cargeek.ir

www.cargeek.ir

Front Seat Belt Assembly

Remove

1. Remove the key from the ignition switch, and disconnect the battery positive and negative (disconnect the ground first). Wait for 10 min until the **SRS** backup circuit is discharged.
2. Remove the end cover of the seat belt and remove 1 bolt fixing the front seat belt to the lower trim panel of the B pillar.

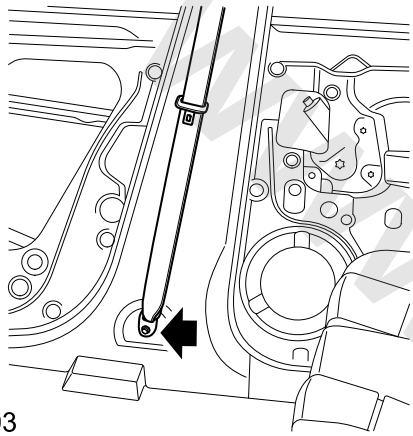

S4613003

3. Remove the B pillar lower trim panel.

B Pillar Lower Trim Panel Remove

4. Remove the B pillar upper trim panel.

B Pillar Upper Trim Panel Remove

5. Remove 1 bolt fixing the front seat belt D ring to the height adjuster.

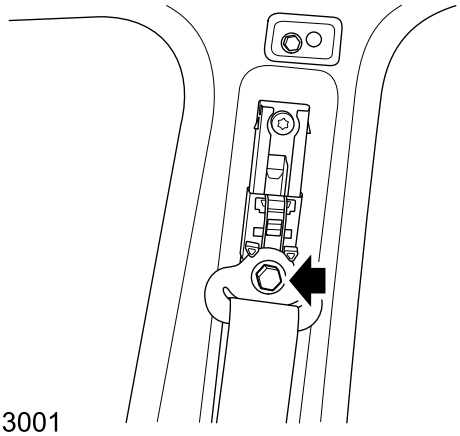

S4613001

6. Disconnect the connector of the seat belt pretensioner.
7. Remove 1 bolt fixing the retractor of the front seat belt to the body.

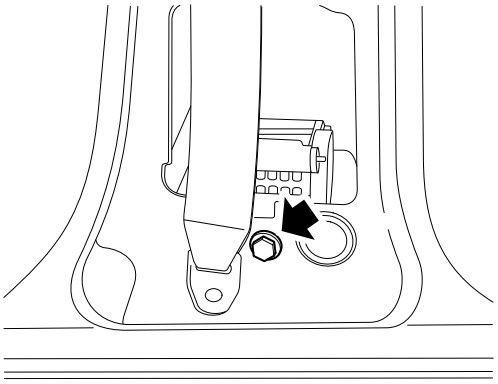

S4613004

8. Remove the front seat belt assembly.

Refit

1. Fix the belt retractor of the front seat to the vehicle body, fit 1 bolt and tighten to **30–35Nm**.
2. Connect the electrical connector of the pretensioner.
3. Fix the seat belt D ring of the front seat to the height adjuster, fit 1 bolt and tighten to **30–35Nm**.
4. Fit the B pillar upper trim panel.

B Pillar Upper Trim Panel Refit

5. Fit the B pillar lower trim panel.

B Pillar Lower Trim Panel Refit

6. Fix the belt of the front seat to the lower trim panel of the B/C pillar, fit 1 bolt and tighten to **30–35Nm**.
7. Fit the end cover of the front seat belt.
8. Check the system, rotate the ignition switch, and check whether the **SRS** warning lamp illuminates for 6s, and then goes out.

www.cargeek.ir

www.cargeek.ir

www.cargeek.ir

Front Seat Belt Buckle

Remove

1. Remove the front seat assembly.

Front Seat Assembly Remove

2. Unscrew 1 bolt securing the front seat belt buckle to the seat.

S4613005

3. Remove the front seat belt buckle.

Refit

1. Fix the front seat belt buckle to the seat, fit 1 bolt and tighten to **35–45Nm**.
2. Refit the front seat assembly.

Front Seat Assembly Refit

Rear Seat Belt Assembly

Remove

1. Remove the key from the ignition switch, and disconnect the battery positive and negative (disconnect the ground first). Wait for 10 min until the **SRS** backup circuit is discharged.
2. Remove the rear seat.

Rear Seat (with central armrest) Remove

3. Remove 1 bolt (1) fixing the side belt of the rear seat to the lower trim panel of the D pillar.

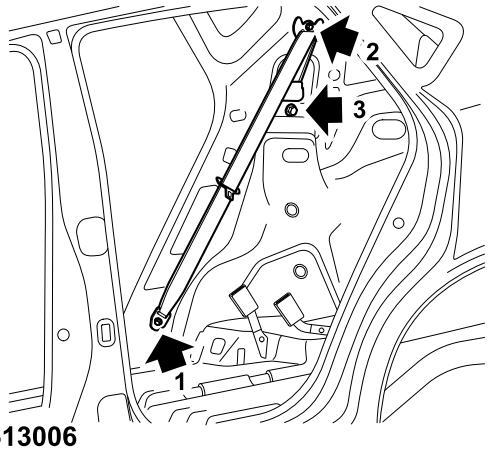

S4613006

4. Remove the luggage cover assembly.

Luggage Cover Assembly Remove

5. Remove the D pillar upper trim panel.

D Pillar Upper Trim Panel Remove

6. Remove 1 bolt (2) fixing the side belt D ring of the rear seat to the vehicle body.
7. Remove the luggage compartment side trim panel.

Luggage Compartment Side Trim Panel Remove

8. Remove 1 bolt (3) fixing the side belt retractor of the rear seat to the vehicle body and remove the retractor.
9. Remove the rear seat belt assembly.

Refit

1. Locate the side belt retractor of the rear seat to the vehicle body, fit the bolts and tighten to **30–35Nm**.
2. Locate the side belt D ring of the rear seat to the vehicle body, fit 1 bolt and tighten to **30–35Nm**.
3. Fit the luggage compartment side trim panel.

Luggage Compartment Side Trim Panel Refit

4. Fit the D pillar upper trim panel.

D Pillar Upper Trim Panel Refit

5. Fit the luggage cover assembly.

Luggage Cover Assembly Refit

6. Fix the side belt of the rear seat to the D pillar lower trim panel, fit 1 bolt and tighten to **30–35Nm**.
7. Fit the rear seat.

www.cargeek.ir

www.cargeek.ir

Rear Seat (with central armrest) Refit

8. Check the system, rotate the ignition switch, and check whether the **SRS** warning lamp illuminates for 6s, and then goes out.

Rear Middle Seat Belt

Remove

1. Remove the rear seat assembly (with central armrest).

Rear Seat (with central armrest) Remove

2. Remove 1 bolt fixing the central belt of the rear seat to the floor.

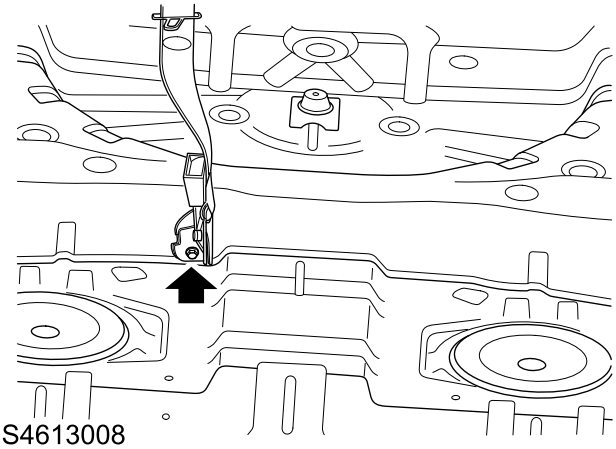

S4613008

3. Remove the rear seat back upholstery assembly.

Rear Seat Back Upholstery Assembly Remove

4. Remove the back plate of the rear seat.
5. Remove 1 bolt fixing the central belt retractor of the rear seat to the frame of the rear seat back.

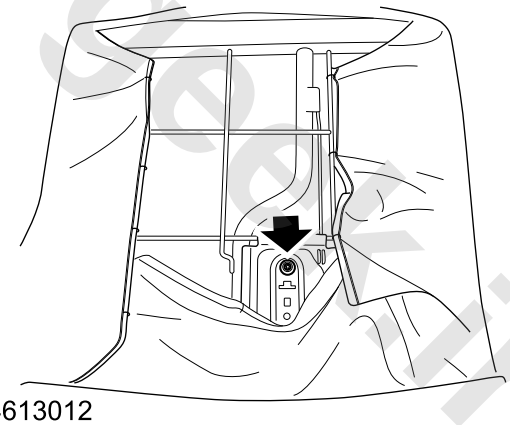

S4613012

6. Take away the back foam of the rear seat, and remove the central belt retractor of the rear seat.
7. Remove the webbing of the central belt from the belt frame hole of the rear seat back, and remove the rear seat central belt assembly.

Refit

1. Pass the webbing of the rear central seat belt through the belt frame hole of the rear seat back.
2. Fix the rear central seat belt to the frame of the rear seat back, fit 1 bolt, tighten to **30–35Nm** and check the torque.
3. Reset the back foam of the rear seat.
4. Fit the back plate of the rear seat.

www.cargeek.ir

www.cargeek.ir

5. Fit the rear seat back upholstery assembly.

☞ **Rear Seat Back Upholstery Assembly Refit**

6. Fix the rear central seat belt to the floor, fit 1 bolt, tighten to **30–35Nm** and check the torque.
7. Fit the rear seat (with central armrest).

☞ **Rear Seat (with central armrest) Refit**

Rear Seat Middle Belt

Remove

1. Remove the rear seat (includes the center armrest).

☞ **Rear Seat Remove (includes the center armrest)**

2. Remove 1 bolt fixing the rear seat middle seat belt to the floor.

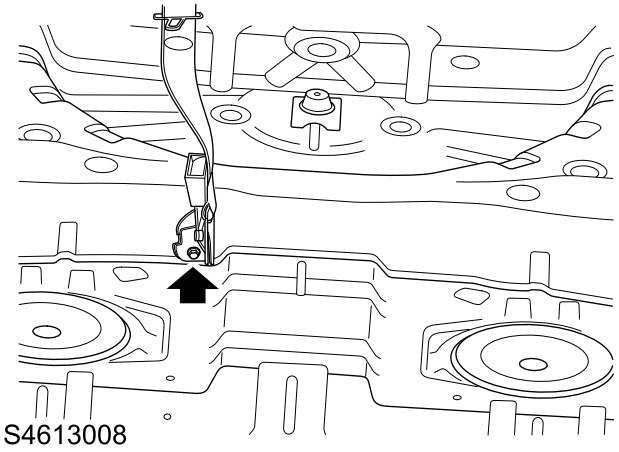

3. Remove the rear seat backrest upholstery assembly.

☞ **Rear Seat Backrest Upholstery Assembly Remove**

4. Remove the rear seat back backboard.
5. Remove 1 bolt fixing the rear seat middle seat belt retractor to the rear seat back frame.

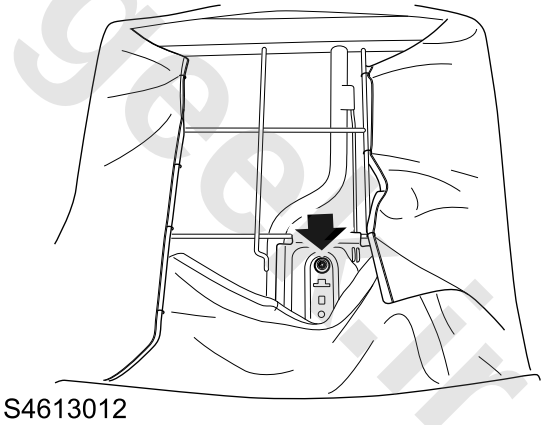

6. Remove the rear seat back foam and take out the rear seat back foam.
7. Pass the middle seat belt web through the rear middle seat belt decorative frame and remove the rear seat middle belt assembly.

Refit

1. Pass the rear middle seat belt web through the rear middle seat belt decorative frame.
2. Fix the rear middle seat belt to the rear seat back frame, fit 1 bolt, tighten to **30–35Nm**, and check the torque.
3. Reset the rear seat back foam.
4. Fit the rear seat back backboard.
5. Fit the rear seat backrest upholstery assembly.

www.cargeek.ir

www.cargeek.ir

Rear Seat Backrest Assembly Refit

6. Fix the rear middle seat belt to the floor, fit 1 bolt, tighten it to**30–35Nm**, and check the torque.
7. Fit the rear seat (includes the center armrest)

Rear Seat Refit (includes the center armrest)

Rear Seat Belt Buckle

Remove

1. Remove the rear seat.

Rear Seat (Including Centre Armrest) Remove

2. Remove 2 bolts securing 2 buckles of rear seat belt to the rear floor, then remove the rear seat belt buckles.

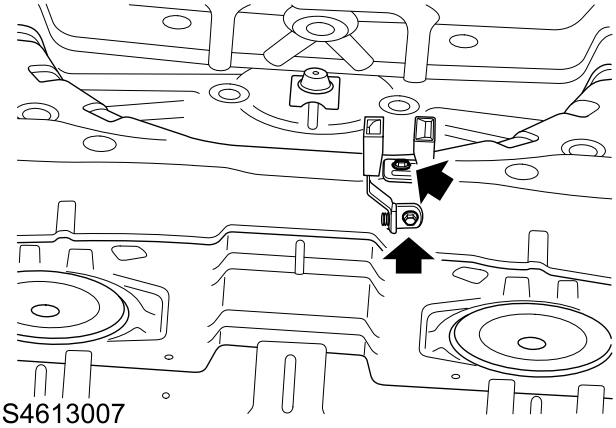

Refit

1. Secure 2 buckles of rear seat belt to the rear floor, fit 2 retaining bolts and tighten to **40–50Nm**.
2. Refit the rear seat.

Rear Seat (Including Centre Armrest) Refit

www.cargeek.ir

www.cargeek.ir

www.cargeek.ir

Supplementary Restraint Systems

Specifications

Torque

Description	Value
Nut-SDM	7–10Nm
Bolt- front impact sensor	7–10Nm
Bolt-side impact sensor	7–10Nm
Screw-front passenger airbag to instrument panel	1.3–1.9Nm
Bolt-front passenger airbag to facia bracket	6–8Nm
Bolt - side curtain	6–8Nm
Bolt - side curtain tie bracket	6–8Nm
Bolt - side curtain bracket	4–6Nm

www.cargeek.ir

www.cargeek.ir

www.cargeek.ir

Description and Operation

System Layout

Airbag Layout

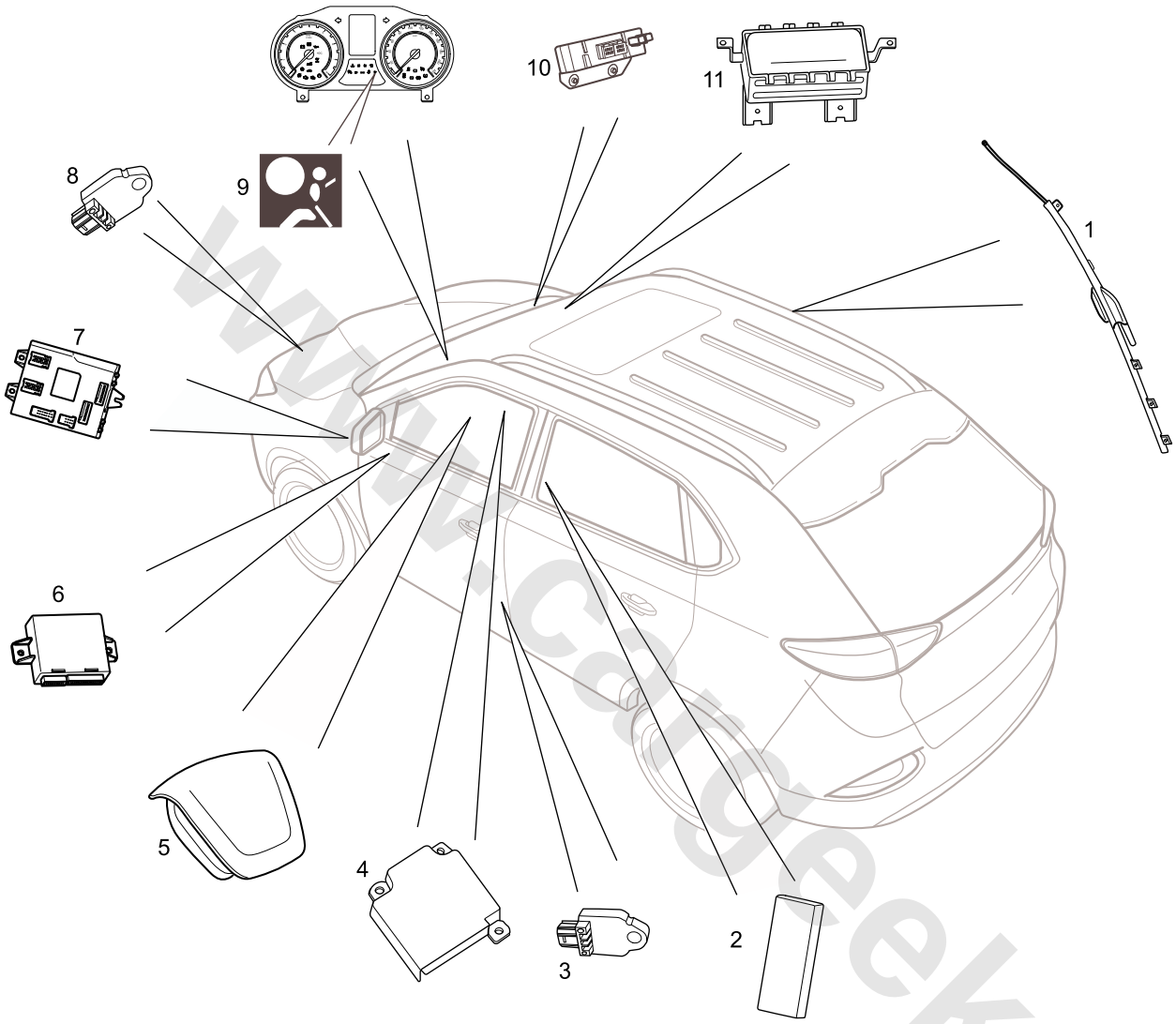

S8110001

1. Right Curtain Airbag
2. Left Curtain Airbag
3. Side Impact Sensor
4. **SDM**
5. Driver Airbag
6. GW
7. **BCM**
8. Front Impact Sensor
9. Airbag Warning Lamp
10. Communication Module
11. Passenger Airbag

www.cargeek.ir

www.cargeek.ir

System Control Diagram

Airbag Control Diagram

www.cargeek.ir

www.cargeek.ir

www.cargeek.ir

Description

Overview

The **SRS** can provide passive protection for the passenger when severe impact occurs. This system is usually based on application of the standard protection system (seat belts).

The SRS consists of the following components:

- **SRS ECU**
- Driver Airbag Module
- Front Passenger Airbag Module
- Side Airbag Module (if fitted)
- Head Curtain Airbag Module (if fitted)
- Seat Belt Pretensioner (if fitted)
- Front Impact Sensor (if fitted)
- Side Impact Sensor (if fitted)
- Rotary Coupler
- SRS Warning Lamp (on the IPK)
- Seat Belt Not Tied Warning Lamp (on the IPK)

SRS The **ECU** connects the vehicle diagnostic socket through the HS **CAN** bus.

SRS ECU

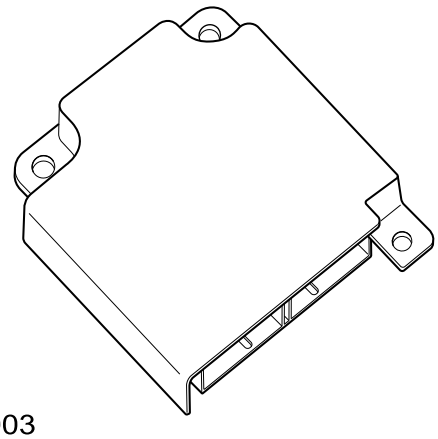

S922003

SRS ECU determines the affected range of the front impact, side impact or rear impact by the internal and external impact sensors (if fitted) so as to control the SRS.

SRS ECU is fitted on the central passage beneath the center console, which is secured with three bolts. **SRS ECU** is connected to the body harness by two connectors.

SRS ECU The internal accelerometer and external impact sensors monitor the vehicle impact. **SRS ECU** can identify the type and severity level of the impact according to these input data and ensure normal operation of the airbag.

If the severity of the front impact exceeds the preset trigger value, the **SRS ECU** will send a signal to activate the front airbag module and seat belt pretensioners.

When fitting the side airbag/curtain airbag, two side impact sensors shall be fitted to monitor the side impact. If the severity of the side impact exceeds the preset trigger value, the**SRS ECU** will send a signal to activate the corresponding side airbag, curtain airbag module and seat belt pretensioner.

If the severity of the rear impact exceeds the preset trigger value, the **SRS ECU** will send a signal to activate the seat belt pretensioner.

Caution: It is important that the SRS ECU is correctly mounted and is fitted in the designated location and orientation to ensure correct operation.

ECU Monitoring

After the vehicle is powered on, the **SRS ECU** monitors the preparation of the SRS module. After start, it monitors the system continuously. The **SRS ECU** monitors the status of the following modules:

- **SRS ECU** Internal Accelerometer
- **SRS ECU** Micro-processor
- Side Impact Sensor (if fitted)
- Front Impact Sensor (if fitted)
- Driver Side Airbag Module
- Passenger Airbag Module
- Side Airbag Module (if fitted)
- Side Curtain Airbag Module (if fitted)
- Seat Belt Pretensioner (if fitted)
- Diagnosis Count

If system failure is detected, the **SRS** warning lamp will illuminate to warn the driver.

The recommended diagnostic device can be used to check the **SRS** malfunction. The diagnostic information can be read includes the current malfunction information, frequency of malfunction occurrence and duration of each malfunction.

Power Supply and Backup Situation

The power supply provides voltage for the **SRS ECU** via a special system fuse on the **BCM**.

In case of power failure, check the connection status of the fuse and harness of the **BCM** and **SRS ECU**. With the ignition switch in "II" position, the SRS will be activated.

SRS ECU contains a capacitor which can save electricity and ensure the corresponding trigger device and ignition circuit can still work within a specific time when regular power supply is cut off by an impact.

www.cargeek.ir

www.cargeek.ir

SRS ECU Harness Connector BY079

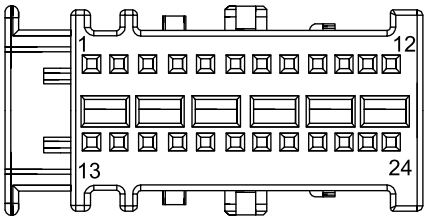

Pin No.	Description
1	HS CAN Low
2	HS CAN High
3	Passenger Seat Belt Buckle Switch
4	Driver Seat Belt Buckle Switch
5	—
6	Ground/Right Impact Sensor Low
7	Right Impact Sensor High
8	Left Impact Sensor High
9	Ground/Left Impact Sensor Low
10	Wake-up Signal
11	KL.15
12	KL.30
13	Driver Airbag Low
14	Driver Airbag High
15	Passenger Airbag High
16	Passenger Airbag Low
17	Left Airbag Low
18	Left Airbag High
19	Right Airbag High
20	Right Airbag Low
21	Driver Pretensioner Low
22	Driver Pretensioner High
23	Passenger Pretensioner High
24	Passenger Pretensioner Low

Warning: Do not use a multimeter or other general purpose test equipment on SRS system components or accidental deployment may occur. Only use the recommended diagnostic equipment to diagnose system faults.

SRS ECU Harness Connector BY142

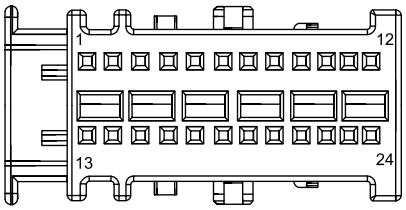

Pin No.	Description
1	—
2	Ground
3	—
4	—
5	—
6	—
7	Ground/Right Front Impact Sensor Low
8	—
9	—
10	Ground/Left Front Impact Sensor Low
11	Right Front Impact Sensor High
12	Left Front Impact Sensor High
13	—
14	—
15	—
16	—
17	—
18	—
19	—
20	—
21	Right Curtain Airbag Low
22	Right Curtain Airbag High
23	Left Curtain Airbag High
24	Left Curtain Airbag Low

Side Impact Sensor

For vehicles with side airbag module, side impact sensor is beside the sill frame, which is fixed on the body with screws. The sensor is designed with a mounting position for correct installation of the sensor , each sensor includes an electronic

www.cargeek.ir

www.cargeek.ir

circuit and a sensing unit. The side impact sensor sends acceleration signal to the **ECU**, and the **ECU** determines whether to trigger it through calculation.

Caution: The side impact crash sensors must be fitted in the correct orientation. Ensure the fixing screws do not damage the sensors or sensor harness when refitting the front seats.

Front Impact Sensor

The front impact sensor is before the engine compartment, which is fixed by screws to the radiator bracket. The sensor is designed with a mounting position for correct installation of the sensor , each sensor includes an electronic circuit and a sensing unit. The front impact sensor sends acceleration signal to the **ECU**, and the **ECU** determines whether to trigger it through calculation.

Driver Airbag Module

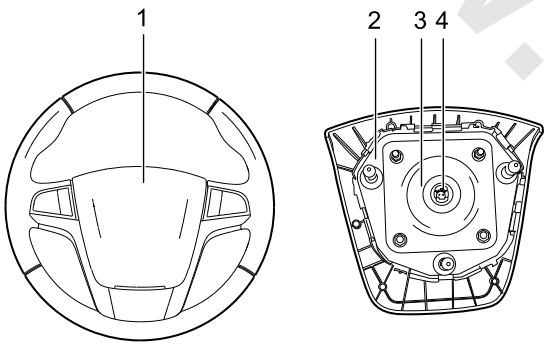

S8112001

1. Airbag Cover
2. Housing
3. Gas Generator
4. Airbag Connector

The driver airbag module is connected with the steering wheel by 3 bulged pins and 1 airbag module connector. When fitting the driver airbag module, push the airbag module towards the steering wheel firmly to embed the wire spring around the airbag module into the opening of the 3 pins.

The electrical connection between the driver airbag module and the **SRS ECU** is realized by the rotary coupler, which is connected to the steering wheel by a connector.

The driver airbag module is triggered by the control signal from the **SRS ECU**. A folding airbag and a gas generator are mounted in the module. When severe front impact is detected by the **SRS ECU**, it will trigger the gas generator and expand the nylon bag rapidly.

Front Passenger Airbag Module

Warning: After replacing the vehicle windscreen the Passenger Restraint System may not be capable of normal operation for 24 hours.

Warning: If a new airbag module shows any sign of damage, do not use.

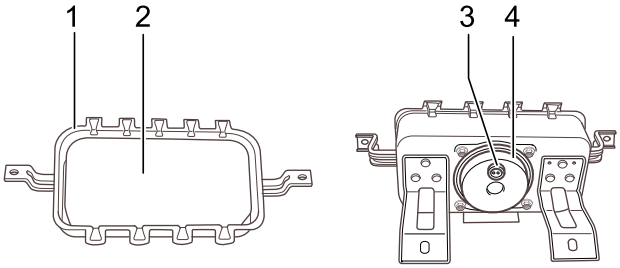

S8112002

1. Airbag Housing
2. Airbag Cover
3. Airbag Connector
4. Gas Generator

The front passenger airbag module is on the glove box of the instrument panel, right before the front passenger seat. The airbag module is fixed upon the instrument panel with bolts.

The front passenger airbag module is triggered by the control signal from the **SRS ECU**. A folding airbag and a gas generator are mounted in the module. When severe front impact is detected by the **SRS ECU**, it will trigger the gas generator and expand the nylon bag rapidly.

Side Airbag (if fitted)

Warning: If a new airbag module shows any sign of damage, do not use.

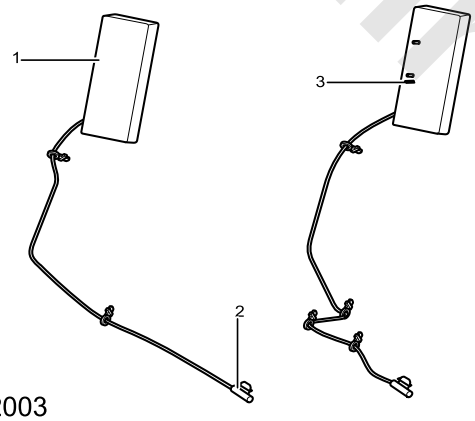

S8112003

1. Airbag Housing
2. Airbag Connector
3. Bracket

www.cargeek.ir

www.cargeek.ir

The side airbag is outside the seat bracket below the seat upholstery. It can protect the rib, pelvis and upper visceral organs in case of side impact. If the side impact is strong enough to deploy the side airbag, the **SRS ECU** will send a control signal to trigger the side airbag.

The side airbag module connector is a 4-pin connector, which is below the seat cushion and connected with the **SRS ECU** through the body harness.

Caution: Do not try to remove the connector at the module end, it is a permanent connection.

Head Curtain Airbag Module (if fitted)

Warning: If a new airbag module shows any sign of damage, do not use.

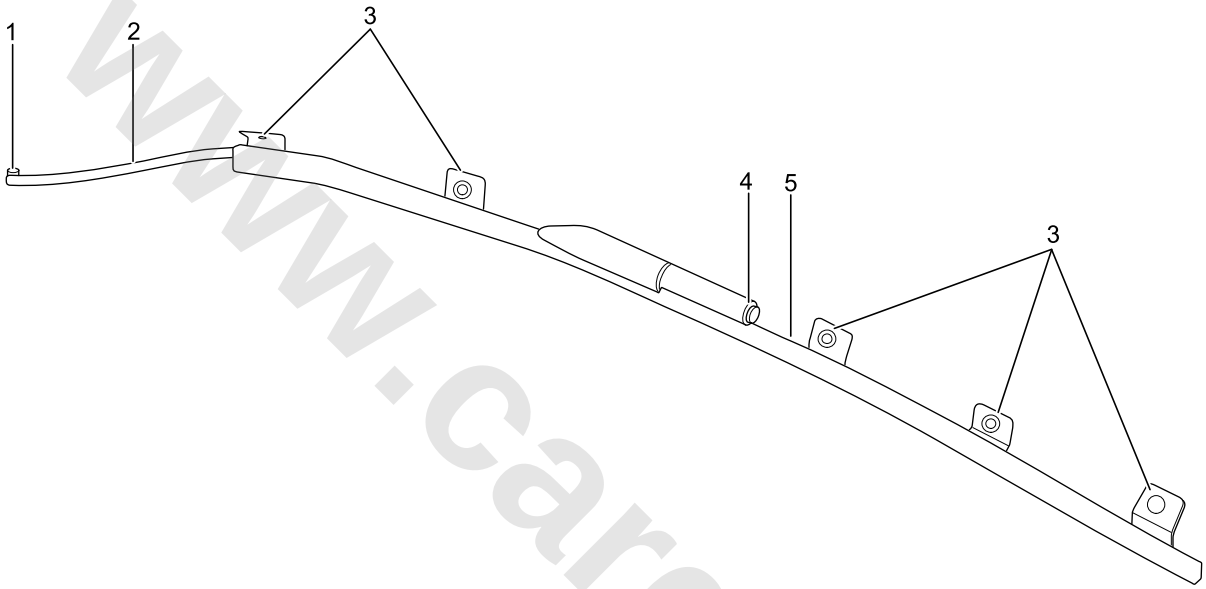

S8112004

1. Clip
2. Airbag Connector
3. Mounting Point
4. Gas Generator Assembly
5. Side Curtain Airbag

The head curtain airbag is provided to ensure all occupants' heads will not touch the body and intruded external objects will not hurt the occupants' bodies in case of collision.

The head curtain airbag module is in the interior trim panel above the front and rear doors. The airbag housing and gas generator are fixed on a bracket in the middle of the airbag module. The front cables are at the lower part of the A pillar. The airbag is fixed by plastic clips, this allows the airbag to disconnect from the vehicle body after inflation. The head curtain airbag module is connected with the **SRS ECU** through the body harness.

www.cargeek.ir

www.cargeek.ir

Operation

Overview

With the ignition switch in "II" position, the SRS will be activated. With the ignition switch in "ON" position, the **SRS** warning lamp illuminates for about 6s, then goes out, this indicates that the system is in normal condition.

Front Impact

If the front impact is severe and exceeds the threshold set in the **SRS ECU**, the front airbag module and front pretensioning seat belt will work.

When the accelerometer and front impact sensor in the **SRS** ECU detect any impact, the ECU will produce current to trigger the front airbag module:

- The driver side front airbag module is activated to expand the airbag.
- The passenger side front airbag module is activated to expand the airbag.

When the front airbag is fully expanded, it will release the gas immediately from the passage port and provide the passenger moving forward with gradual deceleration, this reduces the risk level of injury to the occupants.

SRS The **ECU** can determine the type and severity level of the impact. If the front impact detected by the sensor is severe, the **SRS ECU** will send an ignition signal to the front airbag module and seat belt pretensioner.

Side Impact

Normal operation of the side seat airbag and head curtain airbag depends on whether the severity level of the side impact detected by the side impact sensor and acceleration sensor in the **SRS ECU**exceeds the threshold for triggering the side impact sensor. When the **SRS ECU** detects severe side impact, it will activate the side airbag, curtain airbag module and seat belt pretensioner. The triggered gas generator can produce a large quantity of gas to expand the airbag. The expanded airbag will eject from the seat upholstery, similarly, if the head curtain airbag module is triggered, the airbag will eject from the interior trim panel above the door to protect the passenger from head injury. The fully expanded airbag will release excess gas and reduce the risk of passenger injury.

Front Impact with Angle

When a front impact with angle happens, whether the airbag and seat belt pretensioner work depends on the speed and angle of the impact. There are several conditions:

- The impact is below the threshold of the impact sensor in the **SRS ECU**, and no airbag or seat belt pretensioner is activated.
- The speed and angle of the impact exceed the triggering threshold of the front impact sensor, and the driver/passenger front airbags and seat belt pretensioner are activated (side airbag may also be triggered).

Warning Lamp Check

When the ignition switch is turned on, the **SRS** warning lamp shall illuminate, then check the lamp. If no failure occurs in the **SRS**, the warning lamp shall go out after about 6s to monitor the subsequent ignition cycles.

System Continuity Fault

With the ignition switch ON, if any of the following faults occurs in the system, the **SRS** warning lamp will illuminate.

- **SRS ECU** Failure
- Harness Failure
- Ground Connection Failure
- Open Circuit
- Airbag Module Failure
- Seat Belt Pretensioner Failure

If the system detects any failure during driving, the warning lamp will also illuminate to indicate failure of the **SRS** system. When the warning lamp illuminates, the **SRS** may not work when any impact occurs.

With the ignition switch ON, the diagnosis function of the **SRS ECU** will monitor the **SRS**. If any fault is detected, the **SRS ECU** will store a related DTC in a nonvolatile memory and output a signal to illuminate the **SRS** warning lamp. The failure information in the memory can be read with the scan tool.

Low Voltage

When the voltage is not within the specified range, the malfunction indicator lamp will illuminate. The DTC is stored in the memory.

Intermittent Failure

When intermittent failure occurs, the warning lamp illuminates, and it will be disabled after the failure is eliminated. The warning lamp will not illuminate in the next ignition unless the failure occurs again, but the DTC is still stored in the **SRS ECU** memory.

Permanent Failure

For a permanent failure, the **SRS** lamp will illuminate when the test is conducted, and it will remain on in every subsequent ignition cycle until the cause of the failure is solved. In addition, the diagnosis system will also record the information of the failure occurred.

Additional information provided by the "scan tool" for diagnostic socket includes:

- **SRS ECU** DTC
- Version Levels of Hardware and Software
- Vehicle Identification Number (**VIN**) Data

www.cargeek.ir

SRS The **ECU** records fault information in the memory, and the information can be read by connecting the scan tool to the diagnostic socket below the closure plate of the driver side instrument panel.

www.cargeek.ir

www.cargeek.ir

www.cargeek.ir

Service Procedures

Airbag Control Module

Remove

1. Remove handset from docking station, disconnect battery leads, earth first and wait 10 minutes for the **SRS** back-up power circuit to discharge before commencing work.
2. Remove centre console.

☞ **Console assembly - Remove**

3. Disconnect the **SRS ECU** multiplug.
4. Remove 3 bolts securing **SRS ECU** to body.

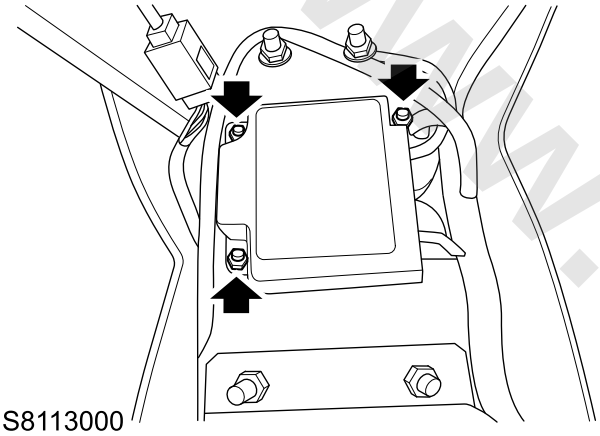

S8113000

5. Remove the **SRS ECU**.

Refit

1. Fix the SDM to the body, fit 3 nuts and tighten to **7–10Nm**.
2. Connect the electrical connector of the SDM.
3. Connect the battery negative.
4. Programme and code the **SDM**.

☞ **Self-learning and Adjustment, Programming and Coding - SDM Replacement**

5. Fit the center console assembly.

☞ **Center Console Assembly Refit**

6. Place the ignition switch in "ON" position, and check whether the **SRS** warning lamp illuminates for 6s and then goes out.

Collision Sensor

Remove

1. Disconnect the battery negative.
2. Remove the side impact sensor.
   a. Remove the B pillar lower trim panel.

☞ **B Pillar Lower Trim Panel Remove**

   b. Disconnect the electrical connector of the side impact sensor.
   c. Remove 1 bolt fixing side impact sensor assembly to the B pillar.

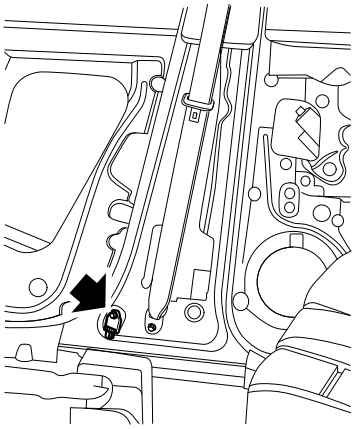

S8113001

   d. Remove the side impact sensor.
3. Remove the front impact sensor.
   a. Open the engine cover, and find the front impact sensor in the front engine compartment.
   b. Remove 1 bolt fixing the front impact sensor bracket to the radiator bracket.

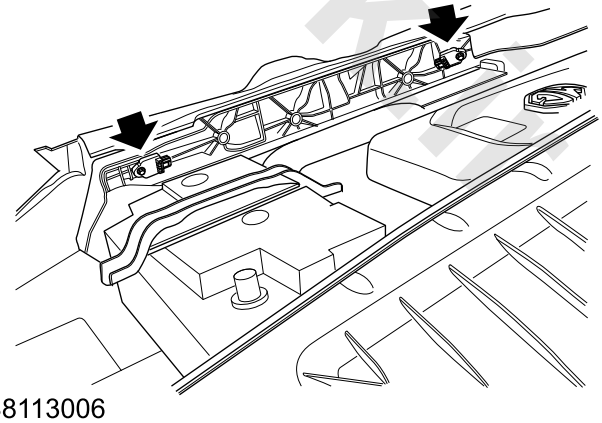

S8113006

   c. Disconnect the connector of the front impact sensor and remove the front impact sensor.

Refit

1. Fit the front impact sensor.
   a. Connect the connector of the front impact sensor.
   b. Fix the front impact sensor to the radiator bracket, fit 1 bolt and tighten to **7–10Nm**.

www.cargeek.ir

www.cargeek.ir

2. Fit the side impact sensor.
   a. Fix the side airbag sensor assembly to the B pillar, fit 1 bolt and tighten to **7–10Nm**.
   b. Connect the electrical connector of the side impact sensor.
   c. Fit the B pillar lower trim panel.

B Pillar Lower Trim Panel Refit

3. Connect the battery negative.

Steering Wheel Airbag

Remove

Warning: It is imperative that before any work is undertaken on the SRS system the appropriate information is read thoroughly.

1. Disconnect the battery negative. Wait for 10 minutes until the SRS backup circuit is discharged.
2. Adjust the steering wheel to the lowest position.
3. Adjust the depth of the steering wheel and pull it outwards to the end.
4. Turn the steering wheel properly to expose the airbag lock ring.
5. Pry open three lock rings from the lower part of the steering wheel with a flat-bladed screwdriver to release the three PINs fixing the airbag to the steering wheel.

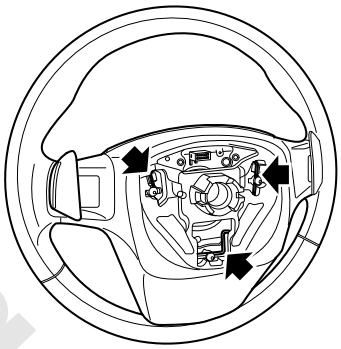

S8153031

6. Disconnect the connector of the airbag.
7. Remove the steering wheel airbag.

Refit

1. Connect the driver airbag connector.
2. Place the driver airbag to the mounting position of steering wheel, ensuring 3 projecting PIN corners of the airbag are aligned with 3 dented holes on the steering wheel.
3. Push the driver airbag into the steering wheel till a click can be heard.
4. Restore the steering wheel.
5. Perform a system check, turn the ignition switch, check whether the **SRS** warning lamp is illuminated for 6 seconds, and then go out.

www.cargeek.ir

www.cargeek.ir

Instrument Panel Airbag

Remove

1. Disconnect the battery negative. Wait for 10 min until the **SRS** backup circuit is discharged.
2. Remove the instrument panel assembly.

☞ **Instrument Panel Assembly Remove**

3. Disconnect the passenger side airbag module connector.
4. Remove 2 bolts fixing the front airbag module bracket of the front passenger to the instrument panel bracket.

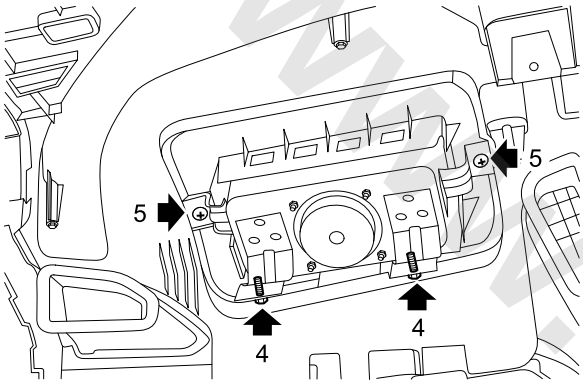

S8153033

5. Remove 2 screws fixing the passenger front airbag module to the instrument panel.
6. Remove 9 clamping jaws fixing the passenger front airbag module to the instrument panel, and remove the passenger front airbag module.

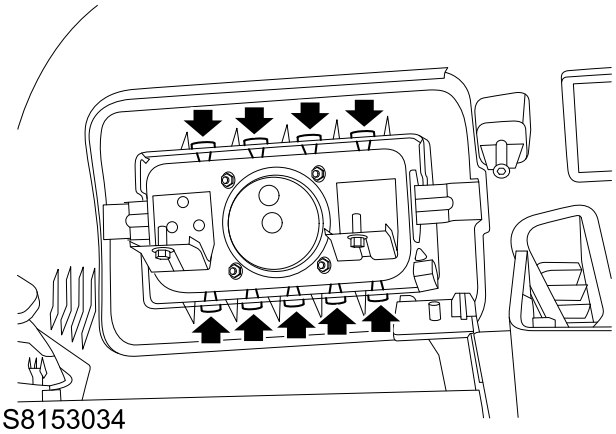

S8153034

Refit

1. Fix the passenger front airbag module to the instrument panel, and fit 9 clamping jaws.
2. Fit 2 screws (**1.3–1.9Nm**) fixing the passenger front airbag module to the instrument panel and check the torque.
3. Fix the passenger side airbag module bracket to the instrument panel frame, fit 2 bolts, tighten to **6–8Nm** and check the torque.
4. Connect the airbag module connector.
5. Fit the instrument panel assembly.

☞ **Instrument Panel Assembly Refit**

6. Connect the battery positive and negative.
7. Turn on the ignition switch, and check whether the **SRS** warning lamp illuminates for 6s, and then goes out.

www.cargeek.ir

www.cargeek.ir

Head Impact Protection Airbag Module

Remove

Warning: It is imperative that before any work is undertaken on the SRS system the appropriate information is read thoroughly.

1. Disconnect the battery negative, wait for 10 minutes until the backup circuit of the **SRS** is discharged.
2. Remove the roof interior, pillar interior and rear trim panel.

Roof Interior Remove

Pillar Interior Remove

Rear Trim Panel Remove

3. Release the hook and disconnect the connector of the curtain airbag.
4. Remove the bracket of the roof handle.
5. Remove 2 bolts fixing the gas generator bracket of the curtain airbag.

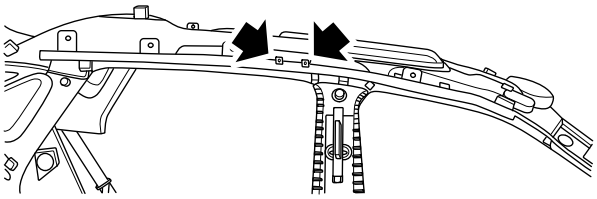

S4713001

6. Remove 1 clip securing the front cable of the curtain airbag.

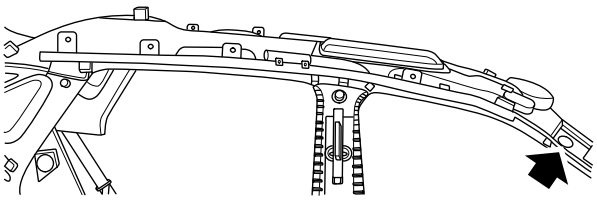

S4713002

7. Remove 4 bolts securing the curtain airbag.

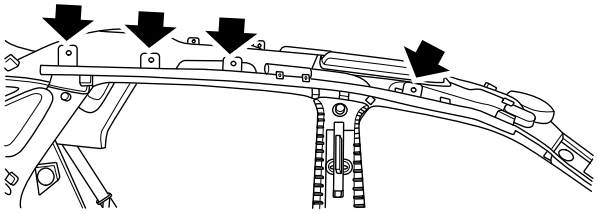

S4713003

Refit

Tip: If the airbag module is to be replaced, the bar code from the new module must be recorded.

1. Fix the curtain airbag to the roof, fit 4 bolts, tighten to **6–8Nm** and check the torque.

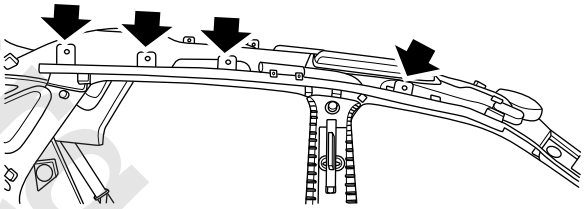

S4730001

2. Fix the front cable of the curtain airbag to the A pillar, fit 1 bolt, tighten to **6–8Nm** and check the torque.

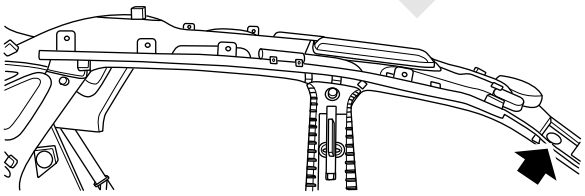

S4730002

3. Fix the bracket of the curtain airbag to the mounting position, fit 2 bolts, tighten to **4–6Nm** and check the torque.
4. Fit the handle bracket.
5. Connect the curtain airbag connector.
6. Fit the roof interior, pillar interior and rear trim panel.

www.cargeek.ir

www.cargeek.ir

Roof Interior Refit

Pillar Interior Refit

Rear Trim Panel Refit

7. Connect the battery negative.
8. Check the system, turn the ignition switch, and check whether the **SRS** warning lamp illuminates for 6s, then goes out.

www.cargeek.ir

www.cargeek.ir

www.cargeek.ir

Park Assistant System

Specifications

Torque

Description	Value
Nut-parking distance control module	4–6 Nm

www.cargeek.ir

www.cargeek.ir

www.cargeek.ir

Description and Operation

System Layout

Parking Assist Control System Layout

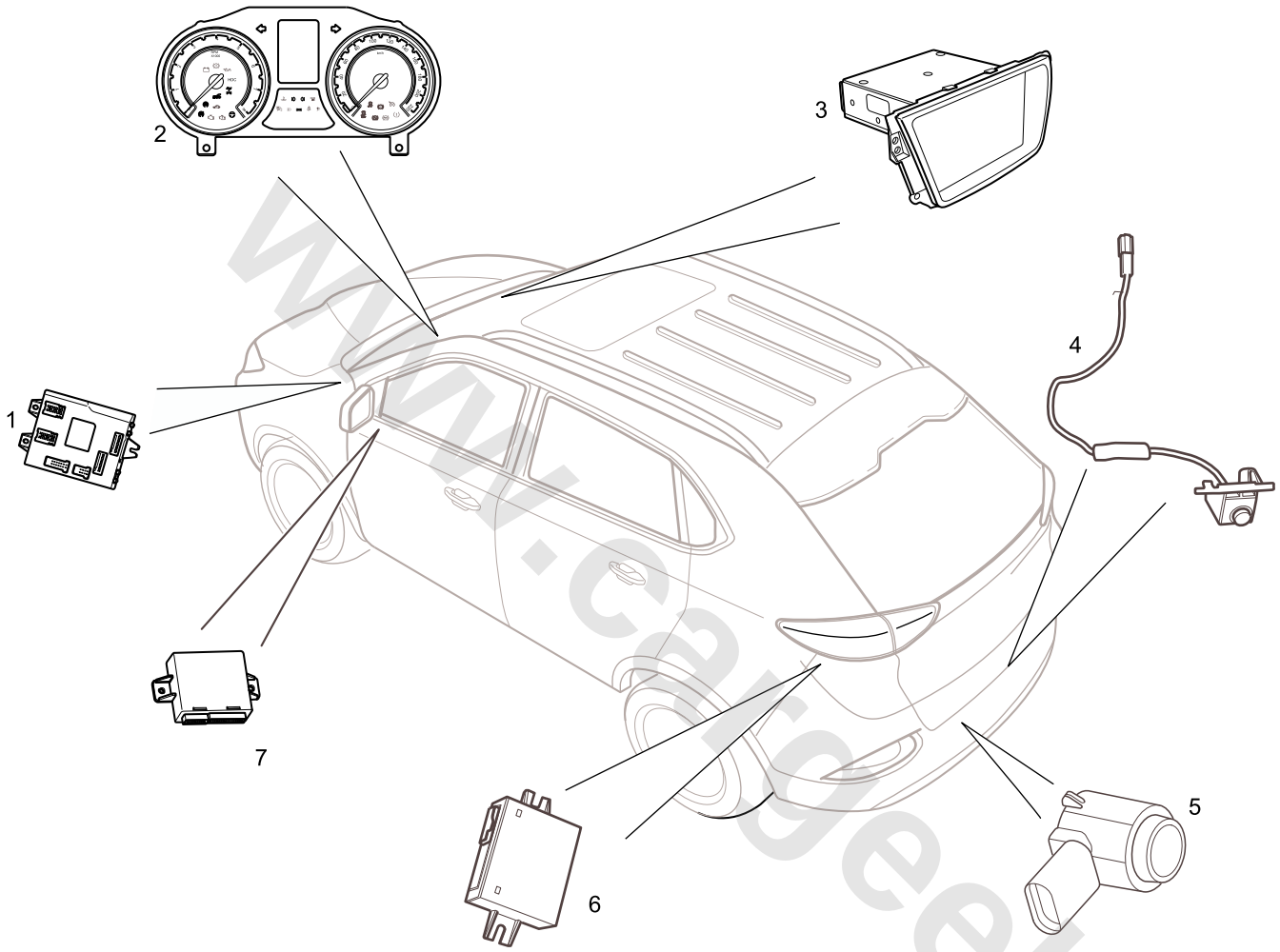

S8110003

1. **BCM**
2. Instrument Pack
3. Navigation Display Unit
4. Rear Camera (if fitted)
5. Rear Ultrasonic Sensor
6. PDC Module
7. GW

www.cargeek.ir

www.cargeek.ir

System Control Diagram

Parking Assist Control System Control Diagram

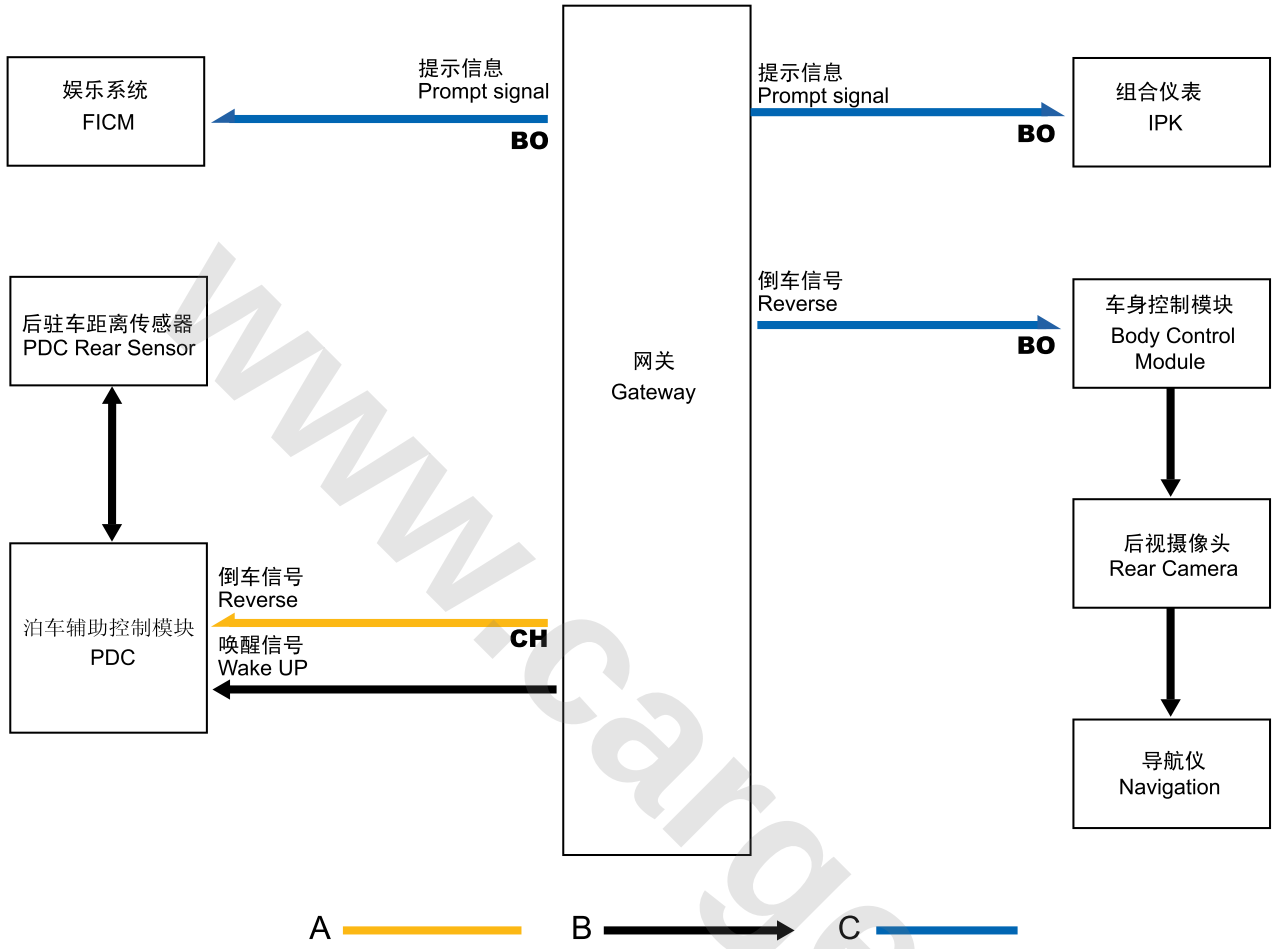

S8111001

A = Chassis HS CAN Bus; B = Hard Wire; C = Body HS CAN Bus

www.cargeek.ir

www.cargeek.ir

Description

Overview

During reversing, if the vehicle has to go through obstructions on the road, the PDC will send a warning to the driver. The system consists of four ultrasonic sensors on the rear bump, **PDC ECU**, IPK, entertainment mainframe and speaker controlled by the entertainment mainframe. When the vehicle is in reverse gear, the **PDC ECU** uses ultrasonic sensors to monitor the area around the rear bumper, if the monitor detects an object within the area, the acoustic alarm in the instrument component or the speaker controlled by the entertainment mainframe will send an acoustic alarm. The system is able to detect relatively hard solid objects and objects like wire fence.

If the vehicle is fitted with a rear camera, the image of the rear vehicle will be displayed on the navigation screen.

Ultrasonic Sensor

The ultrasonic sensors are fixed to the rear bumper. All the four sensors share the same structure, with the colors matching the main body.

The detection range of the two central sensors involves the area 1500mm away from the back of the bumper, while the detection range of the two side sensors involves the area 900mm away from the corner of the bumper.

PDC ECU

PDC ECU is behind the trim panel of the left luggage compartment. It is connected with the sensor by harnesses, when the system is activated, the **PDC ECU** outputs signal to the sensor and acoustic device and receives distance information from the sensor.

PDC ECU Harness Connector BY104 End View and Pin Information

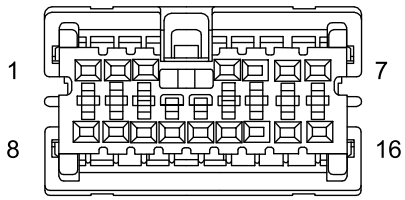

Pin No.	Description
1	Left Rear Central Sensor
2	Right Rear Central Sensor
3	Right Rear Sensor
4	Wake-up Signal
5	—
6	12V Sensor Power
7	KL.30
8	Left Rear Sensor
9	Sensor Ground
10	Chassis HS CAN High
11	Chassis HS CAN Low
12	—
13	—
14	—
15	—
16	Ground

Acoustic Alarm

The acoustic alarm in the instrument pack and the speaker controlled by the entertainment mainframe can inform the driver of the system status and obstacles in the detection zone by acoustic alarm.

Rear Camera

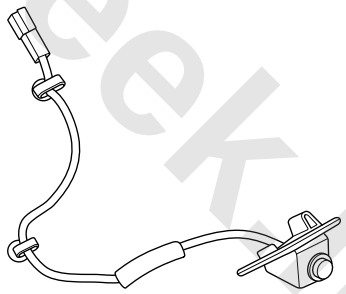

S8112005

The rear camera is between the two rear license plates under the tail gate, which can provide the driver with real-time image around the rear of the vehicle and help the reverse operation. One end of the rear camera is connected to the navigation unit via a hard wire, one is connected to the battery through reverse lamp switch and the other is connected directly with the ground.

www.cargeek.ir

End View and Pin Information of Rear Camera Connector BY083

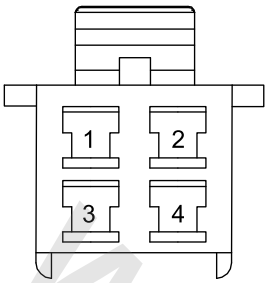

Pin No.	Description
1	12 Camera Power
2	Ground
3	Video Signal
4	Signal Ground

www.cargeek.ir

www.cargeek.ir

www.cargeek.ir

Operation

Overview

The system starts to run when the ignition switch is in "II" position. When the **ECU** selects the reverse gear, it activates the system after 1s delay.

After the **ECU** receives the information that the R gear is selected, it starts the ultrasonic sensor and inputs signal to the speaker, then the speaker will give an acoustic alarm ("beep"), this indicates that the system is activated. Then, the **ECU** receives distance reading from the ultrasonic sensor and determines whether there is any object in the detection zone. If there is no object, it will not send an acoustic alarm; if any object is detected, the **ECU** outputs signal to the speaker and controls the speaker to provide a repetitive acoustic alarm.

From the edge of the detection zone, about 1500mm from the rear vehicle, the alarm frequency increases with the shortened distance between the object and the vehicle, when the object is 300mm away from the vehicle, the alarm becomes consecutive alarm.

If the vehicle is fitted with a draw bar, the **ECU** will detect the towing hook/draft ball from the input information of the sensor, and in order to compensate the towing hook/draft ball, delay the system activation to prevent invalid alarm when shifting between D gear and P gear.

Detection Zone

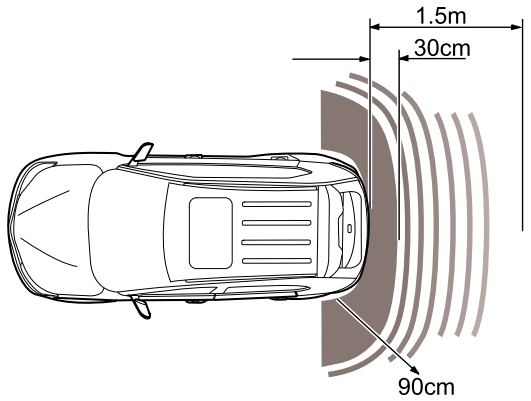

S8112006

The table below shows the relationship between the alarm level/obstacle distance and the acoustic alarm:

SN.	Alarm Level	Distance (mm)	Alarm Cycle (msec)
1	00 = No Obstacle	>1500	
2	01 = Zone 1	0-300	OFF / ON
3	02 = Zone 2	300-450	OFF / ON: 50ms, 75ms, 50ms, 75ms, 50ms, 75ms, 50ms, 75ms, 50ms, 75ms, 50ms
4	03 = Zone 3	450-600	OFF / ON: 50ms, 100ms, 50ms, 100ms, 50ms, 100ms, 50ms, 100ms
5	04 = Zone 4	600-750	OFF / ON: 50ms, 150ms, 50ms, 150ms, 50ms, 150ms
6	05 = Zone 5	750-900	OFF / ON: 50ms, 200ms, 50ms, 200ms, 50ms
7	06 = Zone 6	900-1050	OFF / ON: 50ms, 250ms, 50ms, 250ms
8	07 = Zone 7	1050-1200	OFF / ON: 50ms, 350ms, 50ms
9	08 = Zone 8	1200-1350	OFF / ON: 50ms, 450ms, 50ms
10	09 = Zone 9	1350-1500	OFF / ON: 50ms, 500ms, 50ms
11	0A = Zone 10	Reserved	
12	0B = Zone 11	Reserved	
13	0C = Zone 12	Reserved	

www.cargeek.ir

14	0D = Zone 13	Reserved	
15	0E = Zone 14	Reserved	
16	0F = Zone 15	Reserved	

Caution: Blind spots, areas where the sensor cannot detect obstructions, may occur if obstructions are present at distances of around 200 mm from the sensors.

Self- diagnosis

For each activation, **PDC ECU** and the sensor will perform a self-diagnosis. The **PDC ECU** also checks the system for short circuit or break circuit. If any fault stays for more than 3s, the **PDC ECU** will give continuous alarm for 3s.

Failure Mode	Alarm Cycle	Acoustic Alarm
Left Sensor	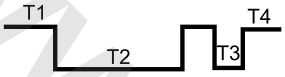	3s Acoustic Alarm + "Beep"
Central Sensor		3s Acoustic Alarm + "Beep, beep"
Right Sensor		3s Acoustic Alarm + "Beep, beep, beep"

www.cargeek.ir

www.cargeek.ir

www.cargeek.ir

Service Procedures

Parking Assist Control Module

Remove

1. Disconnect the battery negative.
2. Remove the left interior trim panel of the luggage compartment.

Luggage Compartment Interior Trim Panel Remove

3. Disconnect the electrical connector of the PDC.
4. Remove 2 nuts fixing the PDC module to the left interior trim panel of the luggage compartment, and remove the PDC module.

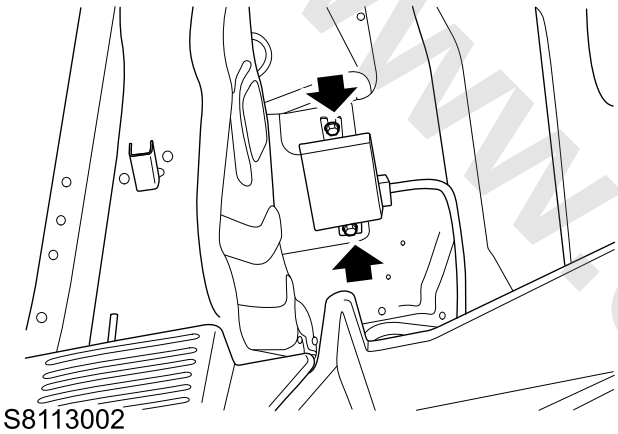

S8113002

Refit

1. Fix the PDC to the left inner panel, fit 2 nuts and tighten to **4–6 Nm**.
2. Connect the electrical connector of the PDC.
3. Connect the battery negative.
4. Programme and code the **PDC**.

Self-learning and Adjustment, Programming and Coding - PDC Replacement

5. Fit the left interior trim panel of the luggage compartment.

Luggage Compartment Interior Trim Panel Refit

Ultrasonic Sensor

Remove

1. Disconnect the battery negative.
2. Remove the rear bumper.

Rear Bumper Remove

3. Disconnect the ultrasonic sensor connector.

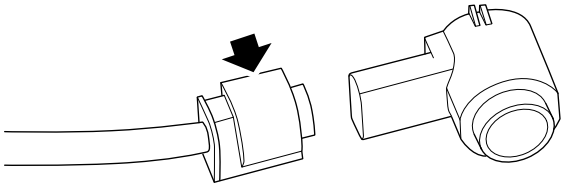

S8113003

4. Remove the ultrasonic sensor from its retaining bracket.

Refit

1. Snap the ultrasonic sensor in its bracket on the rear bumper.
2. Connect the ultrasonic sensor connector.
3. Refit the rear bumper.

Rear Bumper Refit

4. Connect the battery negative.

www.cargeek.ir

www.cargeek.ir

Rear View Camera

Remove

1. Disconnect the battery negative.
2. Remove the tail gate trim panel.

Tail Gate Trim Panel Remove

3. Disconnect the connector of the rear camera.
4. Remove 2 screws fixing the rear camera harness to the inner panel of the tail gate.
5. Remove 2 screws fixing the rear license plate to the tail gate.

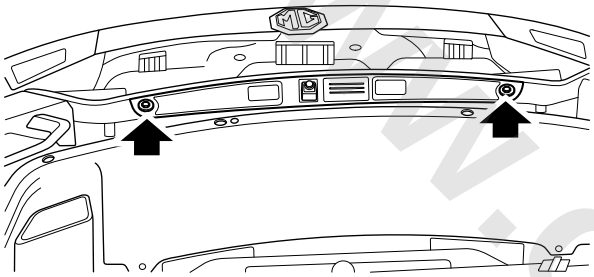

S8113005

6. Release the clip of the rear license plate to remove the rear license plate.
7. Release the clip fixing the rear camera to the tail gate.
8. Remove the rear camera.

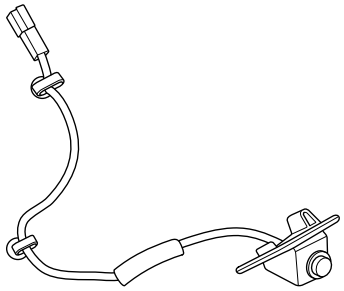

S8112005

Refit

1. Tilt the rear camera, fix it into the tail gate and ensure the clip is properly fixed.
2. Fix the rear license plate to the tail gate, fit the clip and ensure the clip is properly fitted.
3. Fit 2 screws fixing the rear license plate to the tail gate.
4. Fix 2 screws of the rear camera harness to the inner panel of the tail gate.
5. Connect the connector of the rear camera.
6. Fit the trim panel of the tail gate.

Tail Gate Trim Panel Refit

7. Connect the battery negative.

www.cargeek.ir

www.cargeek.ir

Entertainment and Navigation

Specifications

Torque

Description	Value
Screw-CD player to instrument panel	2–2.5Nm
Screw-multi-range speaker	1.5–2Nm
Nut-roof antenna	7–10Nm
Nut-T-box to cross car beam	7–10Nm
Screw-telematics antenna to IP	1.3–1.9Nm

www.cargeek.ir

www.cargeek.ir

www.cargeek.ir

Description and Operation

System Layout

Entertainment and Navigation Layout

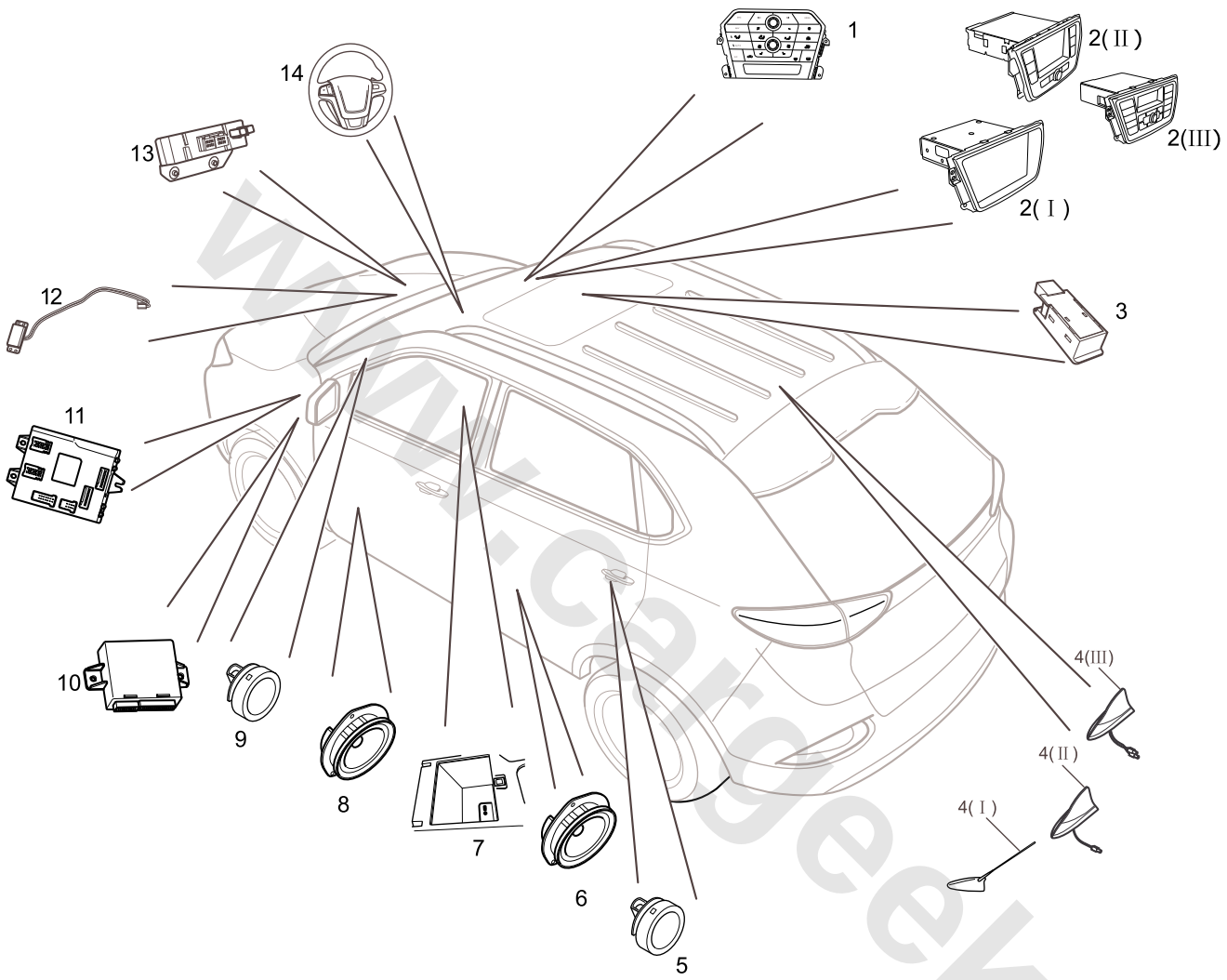

S7310002

1. Entertainment Control Panel (high configuration only)
2. (I) Navigation Mainframe; (II) Entertainment Mainframe with Medium Configuration; (III) Radio with Low Configuration
3. Microphone
4. (I) Radio Antenna with Low Configuration; (II) Entertainment Mainframe Antenna with Medium Configuration; (III) Navigation Mainframe Antenna
5. Rear Door Tweeter
6. Rear Door Full-range Speaker
7. USB/AUX Port
8. Full-range Speaker
9. A Pillar Tweeter
10. GW
11. Body Control Module
12. GPS/GSM Antenna
13. Communication Module
14. Steering Wheel Entertainment Button

www.cargeek.ir

www.cargeek.ir

System Control Diagram

Entertainment and Navigation System Control Diagram

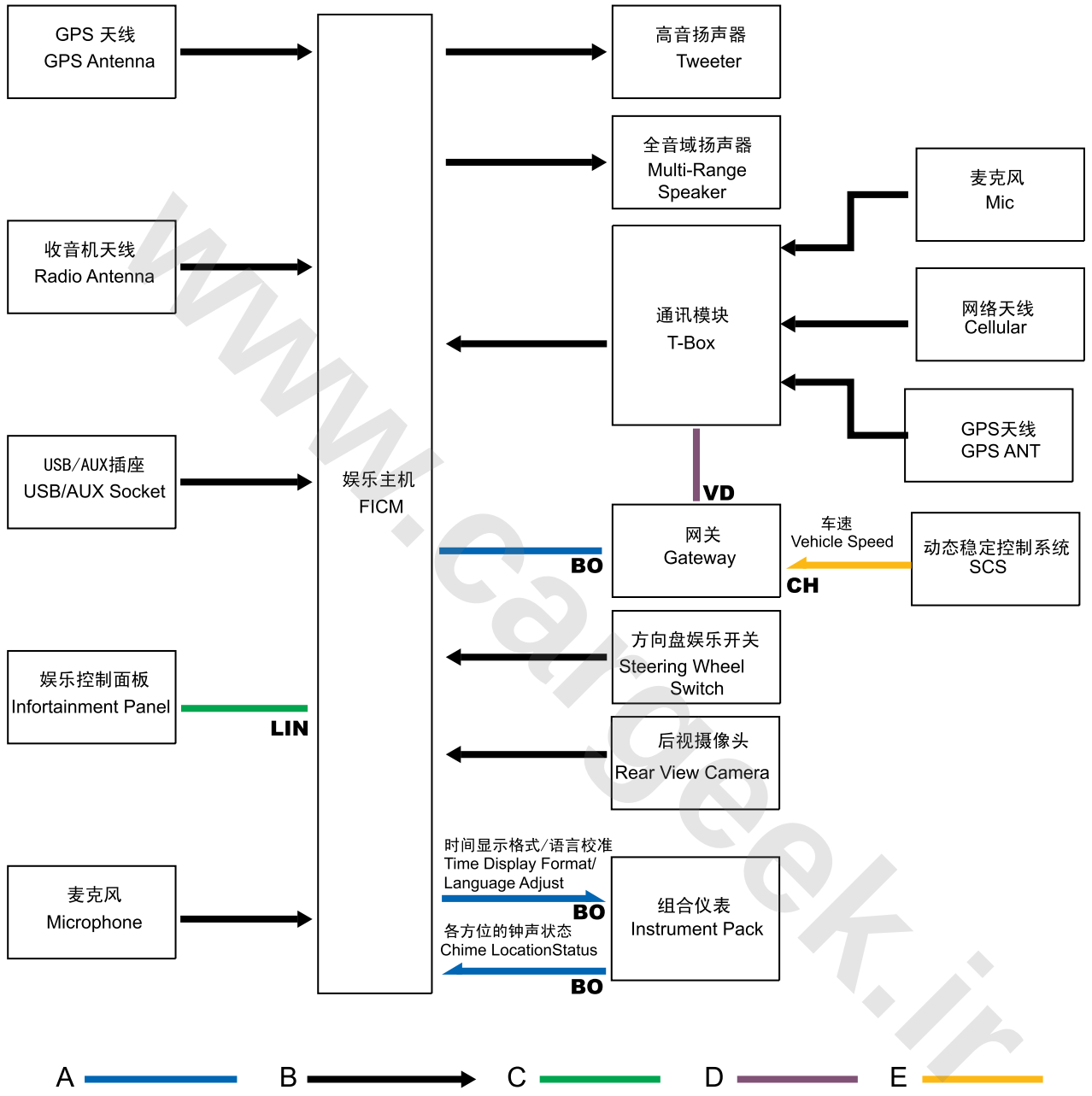

S7311001

A = Body HS CAN Bus; B = Hard Wire; C = LIN Bus; D = Diagnostic HS CAN Bus; E = Chassis HS CAN Bus

www.cargeek.ir

www.cargeek.ir

Description

Overview

According to vehicle configuration and assembly options, there are 3 types of entertainment mainframes.

1. Entertainment mainframes with low configuration support radio and **AUX** USB.
2. Entertainment mainframes with medium configuration support radio, **AUX** USB and bluetooth phone.
3. Entertainment mainframes with high configuration support radio, **AUX** USB, bluetooth phone, GPS and 3G network intelligent driving system.

The navigation system can provide the function of the radio, GPS and communication, and it also supports internet access.

Entertainment Mainframe with Low Configuration

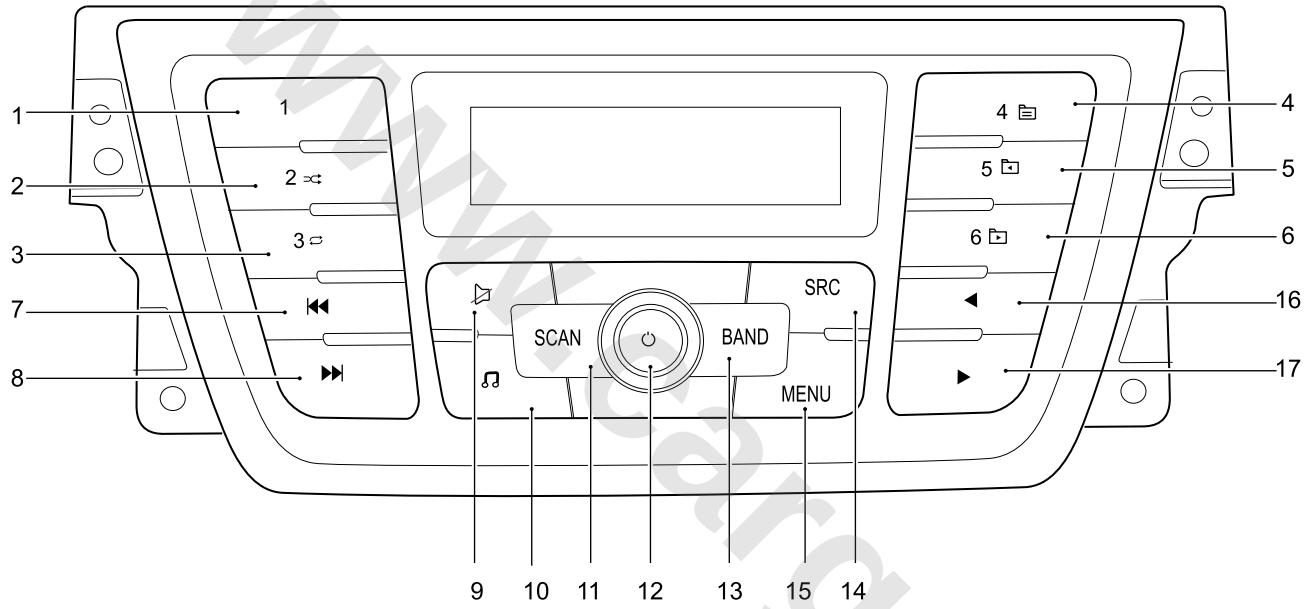

S7313000

1. Number Button 1
2. Number Button 2/Random Play
3. Number Button 3/Repeat Play
4. Number Button 4
5. Number Button 5/Previous File
6. Number Button 6/Next File
7. Previous Track
8. Next Track
9. Mute
10. Selecting EQ Mode
11. Searching Station
12. Power/Volume Control
13. Selecting Radio Mode
14. Play Mode Button
15. Main Menu Button
16. Selecting Previous Folder
17. Selecting Next Folder

www.cargeek.ir

www.cargeek.ir

Entertainment Mainframe with Medium Configuration

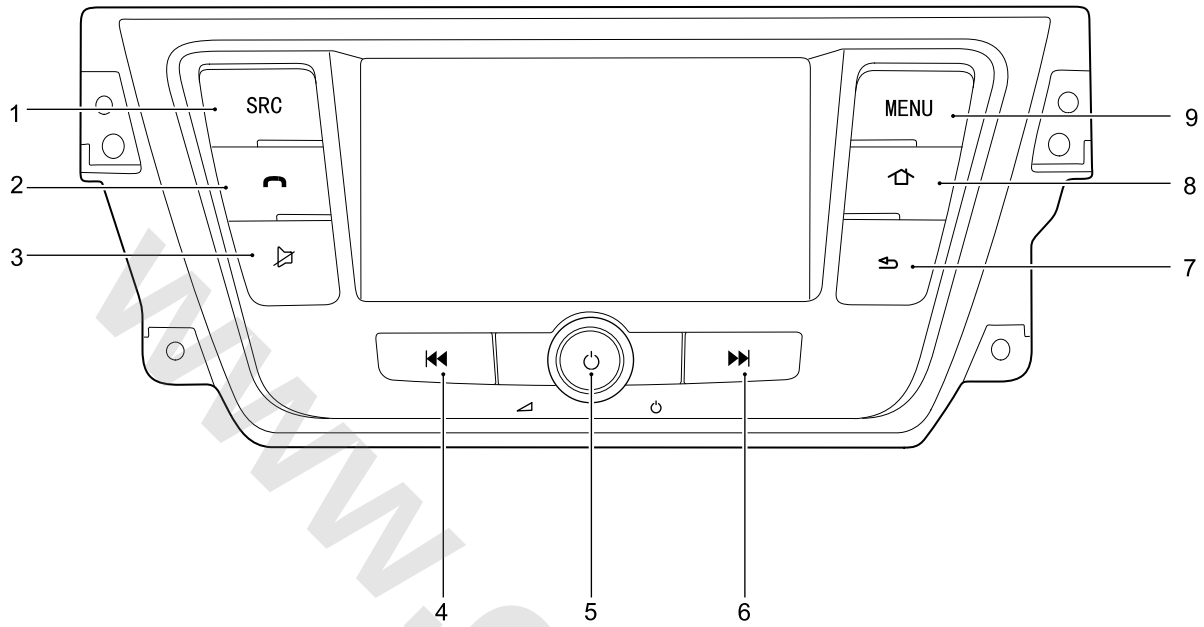

S7313001

1. Play Mode Button
2. Bluetooth Phone
3. Mute Button
4. Previous Track
5. Power/Volume Control
6. Next Track
7. Return Button
8. Home Button
9. Main Menu Button

www.cargeek.ir

www.cargeek.ir

www.cargeek.ir

Navigation Control Panel of Entertainment Mainframe with High Configuration

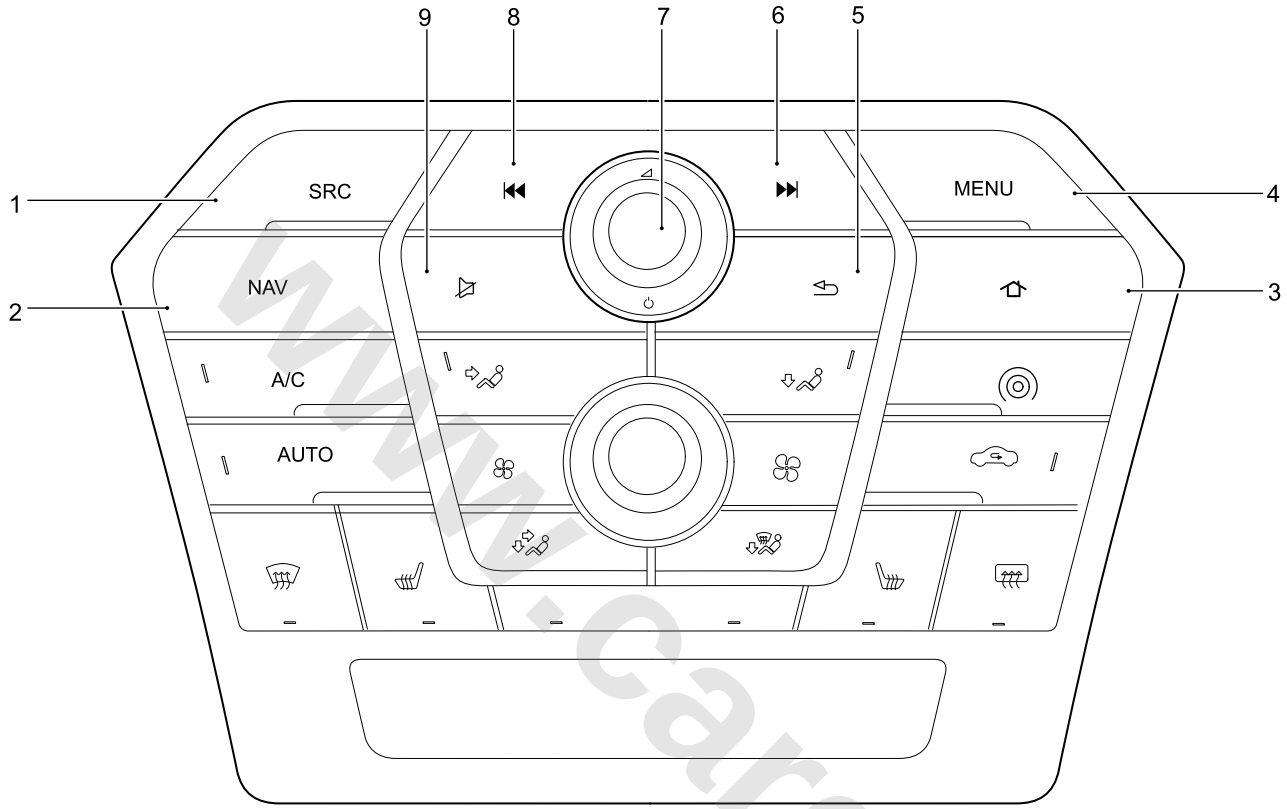

S7313007

1. Play Mode Button
2. Navigation Button
3. Home Button
4. Main Menu Button
5. Return Button
6. Next Track
7. Power/Volume Control
8. Previous Track
9. Mute Button

www.cargeek.ir

www.cargeek.ir

Audio Control Button of Steering Wheel

The audio device can be controlled by the remote button on the steering wheel. The function button allows the most common functions in the **ICE** system to be used in a much more convenient manner.

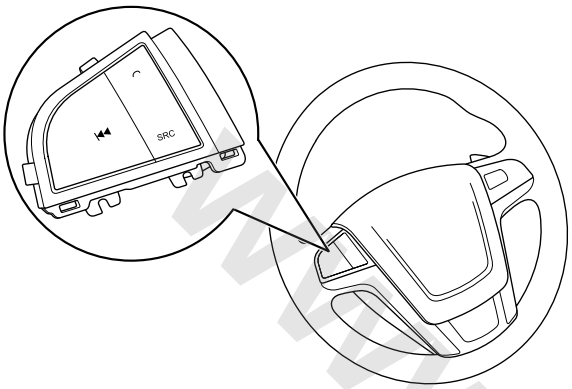

S7313003

Screen

The screen shows the audio information and relevant information.

Full-range Speaker

The full-range speakers are in the four vehicle doors, which are fixed on the door panel by 3 screws.

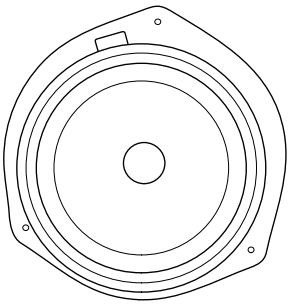

S7313005

Tweeter

Two of the four tweeters are on the left/right A pillars, and the other 2 are on the two rear doors. Tweeters on the left/right A pillars are fixed by clips to the A pillar trim panel, and those on the rear doors are fixed by clips to the inner handle assembly of the rear door.

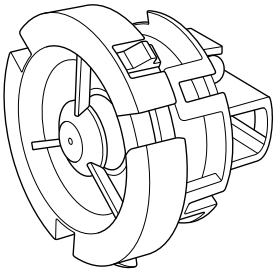

S7313006

Antenna

The antenna of the entertainment system is selected according to the entertainment mainframe.

Entertainment mainframes with low configuration uses mast antenna.

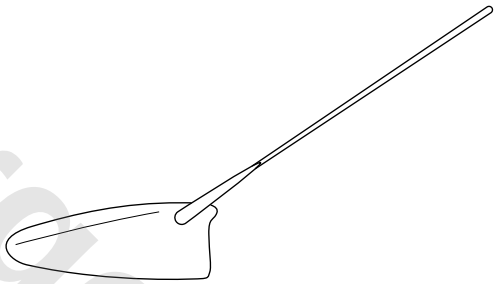

S7313018

Entertainment mainframes with medium configuration uses the shark fin antenna without **GPS** antenna.

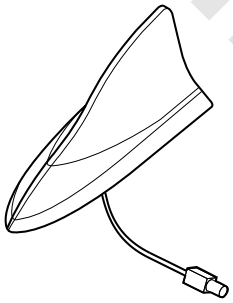

S7313019

Entertainment mainframes with high configuration uses the shark fin antenna with **GPS** antenna.

www.cargeek.ir

www.cargeek.ir

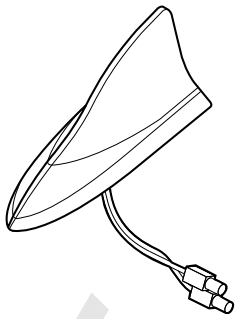

S7313020

GPS

The navigation system can provide audio and visual route guidance information, leading the driver to the expected destination. The system allows the drivers to set route according to the common highway or express way. Directions of the interested points, such as hospital, museum, monument and hotel etc, can also be obtained. The navigation computer uses the map information stored in SD memory card to determine the best route of the journey and provide the driver with detailed information about the direction and the nearby junctions.

The current location of the vehicle is determined by the **GPS**. The satellites used by the **GPS** are running in high orbits 20,000km away from the earth surface, which orbit the earth every 12hr and provide location information related to the satellite, such as latitude, longitude, altitude, almanac data and time etc. Almanac data refer to the current status of the satellite orbiting the earth. The computer will check which satellites can be detected by the system, as well as the current location of these satellites and their relations. With above information, the computer is able to tell the position deviation of the satellites and compensate the deviation to increase the accuracy of the navigation system. The navigation system requires the almanac data from at least 4 different satellites to calculate its three-dimensional location. While the vehicle is running, the computer will update the information constantly so that it can always identify the exact location of the vehicle. The navigation computer determines the direction of the vehicle based on the measured wheel speed difference.

Harness Connector of Entertainment Mainframe with Low Configuration

End View and Pin Information of Harness Connector FA011 (Entertainment Mainframe with Low Configuration)

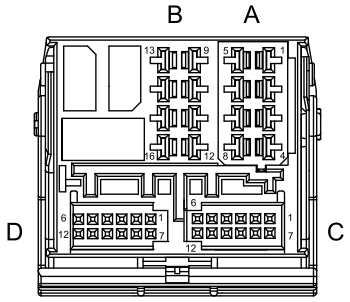

Pin No.	Description
A1	Right Track + (rear)
A2	Right Track + (front)
A3	Left Track + (front)
A4	Left Track + (rear)
A5	Right Track - (rear)
A6	Right Track - (front)
A7	Right Track - (front)
A8	Left Track - (rear)
B9	Reverse Signal
B10	Backlight Signal
B11	Speed Pulse Signal
B12	Mute Signal
B13	Power Supply of the Antenna Amplifier
B14	KL.R
B15	KL.30
B16	Ground
C1	External Audio Input (left)
C2	—
C3	Wire Control Ground
C4	Wire Control Signal
C5	—
C6	—
C7	External Audio Input (right)
C8	External Audio Input Ground
C9	—
C10	Wire Control Signal
C11	—

www.cargeek.ir

www.cargeek.ir

Pin No.	Description
C12	—
D1	—
D2	—
D3	—
D4	—
D5	—
D6	—
D7	—
D8	—
D9	—
D10	—
D11	—
D12	—

End View and Pin Information of Harness Connector FA012 (Entertainment Mainframe with Low Configuration)

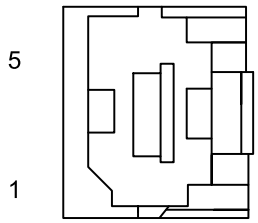

Pin No.	Description
1	USB Power
2	USB Data -
3	USB Data +
4	—
5	USB Ground
6	Shield Wire

End View and Pin Information of Harness Connector FA018 (Entertainment Mainframe with Low Configuration)

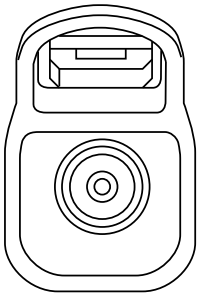

Pin No.	Description
1	FM/AM
2	FM/AM Shield

Harness Connector of Entertainment Mainframe with Medium Configuration

End View and Pin Information of Harness Connector FA011 (Entertainment Mainframe with Medium Configuration)

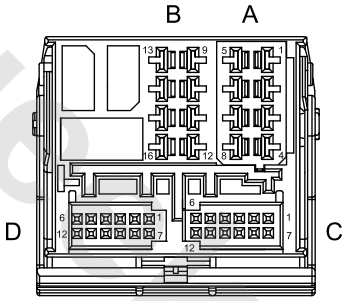

Pin No.	Description
A1	Right Rear Audio +
A2	Right Front Audio +
A3	Left Front Audio +
A4	Left Rear Audio +
A5	Right Rear Audio -
A6	Right Front Audio -
A7	Left Front Audio -
A8	Left Rear Audio -
B9	—
B10	—
B11	—
B12	—

www.cargeek.ir

www.cargeek.ir

Pin No.	Description
B13	—
B14	—
B15	KL.30
B16	Ground
C1	**AUX** Left Audio
C2	LIN Bus
C3	Steering Wheel Button Signal Ground
C4	Steering Wheel Button Signal 1 +
C5	Microphone - (ground)
C6	HS CAN High
C7	**AUX** Right Audio
C8	**AUX** Ground
C9	**AUX** Video
C10	Steering Wheel Button Signal 2 +
C11	Microphone +
C12	HS CAN Low
D1	—
D2	—
D3	—
D4	—
D5	—
D6	—
D7	—
D8	—
D9	—
D10	—
D11	—
D12	—

End View and Pin Information of Harness Connector FA012 (Entertainment Mainframe with Medium Configuration)

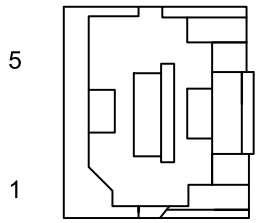

Pin No.	Description
1	USB Power
2	USB Data -
3	USB Data +
4	—
5	USB Ground
6	Shield Wire

End View and Pin Information of Radio Antenna Harness Connector FA017 (Entertainment Mainframe with Medium Configuration)

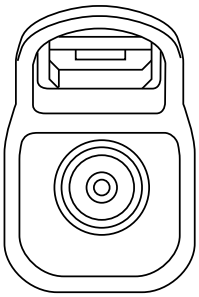

Pin No.	Description
FM1	FM/AM +
FM2	FM/AM -

Harness Connector of Navigation/Entertainment Mainframe with High Configuration

End View and Pin Information of Harness Connector FA011 (Navigation/Entertainment Mainframe with High Configuration)

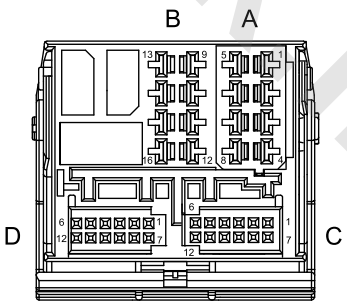

Pin No.	Description
A1	Right Rear Audio Signal +
A2	Right Front Audio Signal +
A3	Left Front Audio Signal +
A4	Left Rear Audio Signal +
A5	Right Rear Audio Signal -

www.cargeek.ir

www.cargeek.ir

Pin No.	Description
A6	Right Front Audio Signal -
A7	Left Front Audio Signal -
A8	Left Rear Audio Signal -
B9	—
B10	—
B11	—
B12	—
B13	—
B14	—
B15	KL.30
B16	Ground
C1	**AUX** Audio/Video Left Track
C2	LIN Communication Signal
C3	Steering Wheel Button Signal Ground
C4	Steering Wheel Button Signal 1 +
C5	Microphone -
C6	HS CAN High
C7	**AUX** Audio/Video Right Track
C8	**AUX** Ground
C9	**AUX** VIDEO
C10	Steering Wheel Button Signal 2 +
C11	Microphone +
C12	HS CAN Low
D1	—
D2	—
D3	Ground
D4	Communication Module to Communication Serial Port
D5	Rear Camera Input Signal
D6	TBOX AUD +
D7	—
D8	—
D9	—
D10	Communication Serial Port to Communication Module
D11	Rear Camera Ground
D12	TBOX AUD -

End View and Pin Information of Harness Connector FA012 (Navigation/Entertainment Mainframe with High Configuration)

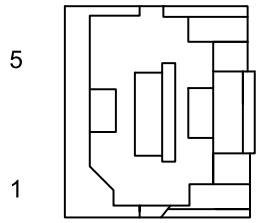

Pin No.	Description
1	USB Power
2	USB Data -
3	USB Data +
4	—
5	USB Ground
6	Shield Wire

End View and Pin Information of Harness Connector FA017 (Navigation/Entertainment Mainframe with High Configuration)

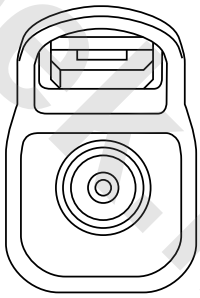

Pin No.	Description
1	AM/FM Signal
2	Ground

End View and Pin Information of GPS Antenna Harness Connector FA018

www.cargeek.ir

(Navigation/Entertainment Mainframe with High Configuration)

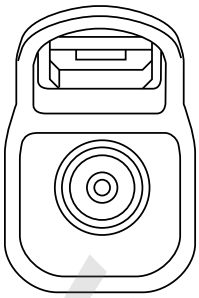

Pin No.	Description
1	GPS Signal
2	Ground

Remote Communication Module Connector

End View and Pin Information of Harness Connector FA020 (Remote Communication Module)

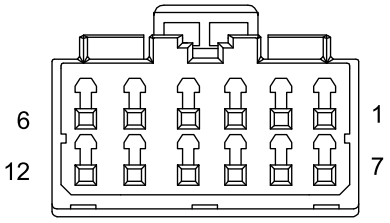

Pin No.	Description
1	USB Data -
2	USB Data +
3	Ground
4	Communication Module to Communication Serial Port
5	Microphone Output
6	Full-range Speaker +
7	USB Power
8	USB Ground
9	USB Shield Wire
10	Communication Serial Port to Communication Module
11	Microphone Output Ground
12	Full-range Speaker -

End View and Pin Information of Harness Connector FA024 (Remote Communication Module)

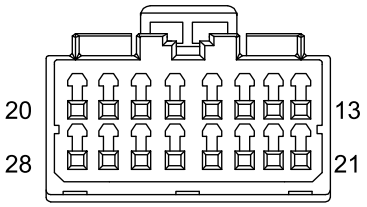

Pin No.	Description
13	Microphone Input
14	—
15	—
16	—
17	—
18	HS CAN High
19	KL.15
20	Ground
21	Microphone Ground
22	Key Ground
23	—
24	Ground
25	—
26	HS CAN Low
27	—
28	KL.30

End View and Pin Information of USB Harness Connector FA025 (Remote Communication Module)

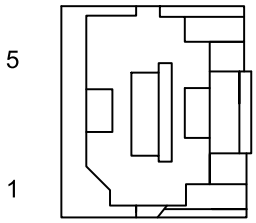

www.cargeek.ir

www.cargeek.ir

Pin No.	Description
1	USB Power
2	USB Data -
3	USB Data +
4	—
5	USB Ground
6	Shield Wire

End View and Pin Information of GPS Harness Connector FA069 (Remote Communication Module)

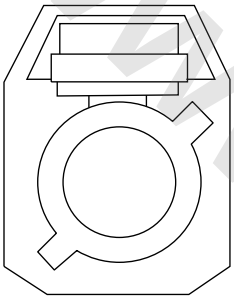

Pin No.	Description
1	GPS +
2	Shield Wire

End View and Pin Information of GSM Antenna Harness Connector FA068 (Remote Communication Module)

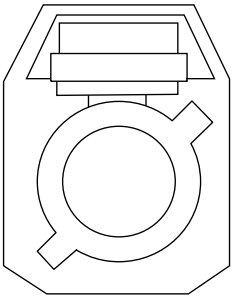

Pin No.	Description
1	GSM +
2	Shield Wire

www.cargeek.ir

www.cargeek.ir

www.cargeek.ir

Operation

The onboard entertainment system is only operable when the remote key is inserted or the ignition switch is ON.

For more information on the operation of the onboard entertainment system, please refer to "User Manual" and "Navigation Manual".

www.cargeek.ir

www.cargeek.ir

www.cargeek.ir

Service Procedures

Entertainment Mainframe

Remove

1. Disconnect the battery negative.
2. Release the clip of the central control panel and remove the central control panel assembly.
3. Remove 4 screws fixing the entertainment mainframe to the instrument panel.

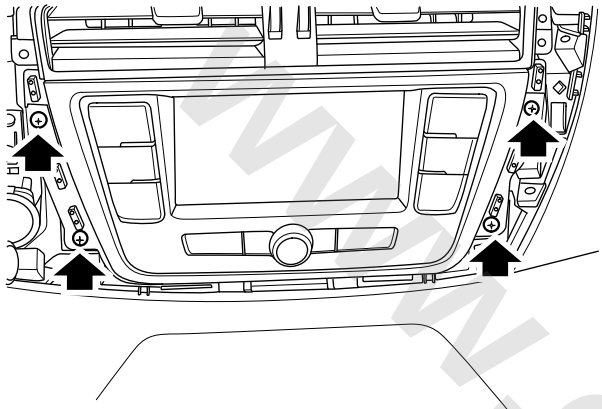

S7313016

4. Disconnect the connector of the entertainment mainframe, and remove the entertainment mainframe.
5. Navigation mainframe: Remove the navigation control panel.

Navigation Control Panel Remove

Refit

1. Navigation mainframe: Fit the navigation control panel.

Navigation Control Panel Refit

2. Connect the connector of entertainment mainframe.
3. Connect the battery negative.
4. Programme and code the entertainment information control module (FICM).

Self-learning and Adjustment, Programming and Coding - FICM Configuration

5. Fit 4 screws fixing the entertainment mainframe to the instrument panel and tighten to **2–2.5Nm**.
6. Fix the central control panel to the instrument panel, fit the clip and ensure the clip is properly fitted.

Replacement and Activation of Communication Player/Communication Module

- If the problem can be solved by reference to the Troubleshooting Manual, repair the vehicle according to the relevant procedures and return the vehicle to the customer after repair.
- If the problem cannot be solved by reference to the Troubleshooting Manual, the communication player or communication module fails, please replace it.

  Procedures for replacement and activation are as follows:

1. Remove the corresponding module according to replacement requirements.
   a. If the communication player shall be replaced, remove the communication player from the vehicle.

Communication Player Remove

   b. If the communication module shall be replaced, remove the communication module from the vehicle.

Communication Module Remove

2. Record the relevant information of the part to be replaced and report the information to the SAIC Self-service System.
   a. If the communication player shall be replaced, record the **VIN** and serial number of the old/new communication players, and confirm the above information is reported to the system.
   b. If the communication module shall be replaced, record the **VIN**, serial number of the old/new communication modules, old ICCID serial number, new ICCID serial number and phone number, and confirm the above information is reported to the system.
3. Fit the corresponding module according to replacement requirements.
   a. If the communication player is replaced, fit the new communication player to the vehicle.

Communication Player Refit

   b. If the communication module is replaced, fit the new communication module to the vehicle.

Communication Module Refit

4. For application of an activation code, please go to the SAIC Remote Activation System.
   a. If the communication player is replaced, the background will replace the old communication player with the new one and disable the communication player and communication module.
   b. If the communication module is replaced, the background will replace the old communication module with the new one and disable the communication player and communication module.
5. The background will create an activation code and send it to the cell phone designated by the user.
6. Input the activation code into the communication player. if the activation is successful, the background activates the communication player and communication module, and gives prompts to indicate completion of the operation.

www.cargeek.ir

www.cargeek.ir

A Pillar Tweeter

Remove

1. Disconnect the battery negative.
2. Remove the A pillar upper trim panel.

A Pillar Upper Trim Panel Remove

3. Disconnect the electrical connector from the tweeter.
4. Release the clips securing A pillar tweeter to A pillar upper trim panel and remove A pillar tweeter.

Refit

1. Place A pillar tweeter into A pillar trim panel and ensure the clips are fully engaged.
2. Connect the tweeter connector.
3. Refit the A pillar upper trim panel.

Refit of Pillar A Upper Trim Panel

4. Connect the battery negative.

Front Door Full Range Speaker

Remove

1. Disconnect the battery negative.
2. Remove the front door interior trim panel.

Remove of Front Door Interior Trim Panel

3. Disconnect the connector from the front door full range speaker.
4. Unscrew 3 screws fixing the full range speaker to the front door, and remove the full range speaker.

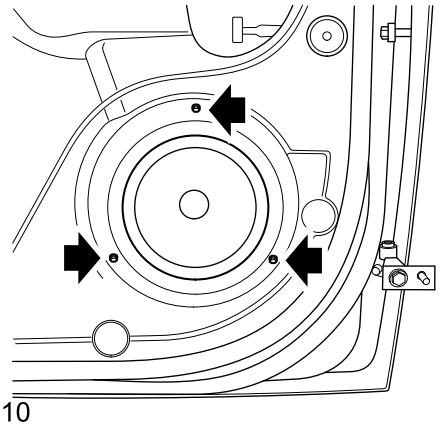

S7313010

Refit

1. Fix the front door full range speaker to the front door, fit 3 screws and tighten to **1.5–2Nm**.
2. Connect the connector of full range speaker.
3. Refit the front door interior trim panel.

Refit of Front Door Interior Trim Panel

4. Connect the battery negative.

www.cargeek.ir

www.cargeek.ir

Rear Door Tweeter

Remove

1. Disconnect the battery negative.
2. Remove the rear door interior trim panel.

☞ **Rear Door Interior Trim Panel Remove**

3. Disconnect the connector from the rear door tweeter.
4. Release the clips of the rear door tweeter to remove the tweeter from the rear door inner handle assembly.

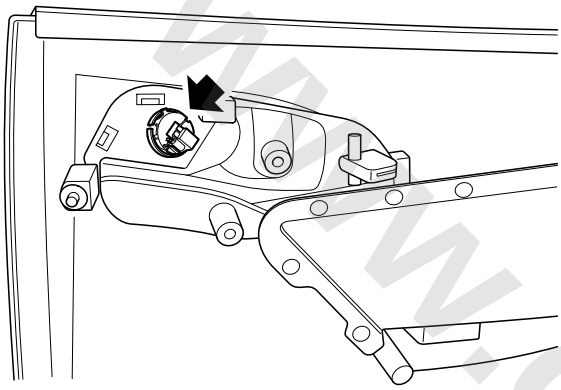

S7313011

Refit

1. Place the rear door tweeter into the rear door inner handle assembly.
2. Connect the connector of the rear door tweeter.
3. Refit the rear door interior trim panel.

☞ **Refit of Rear Door Interior Trim Panel**

4. Connect the battery negative.

Rear Door Woofer

Remove

1. Disconnect the battery negative.
2. Remove the rear door interior trim panel.

☞ **Rear Door Interior Trim Panel Remove**

3. Disconnect the connector from the rear door full range speaker.
4. Unscrew 3 screws fixing the rear door full range speaker to the rear door, and remove the full range speaker.

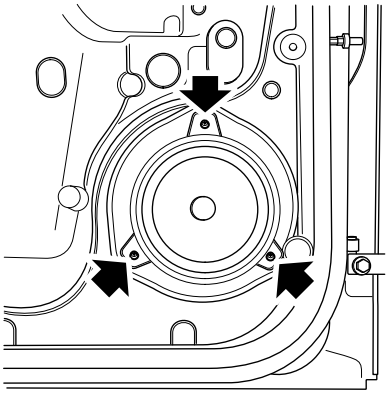

S7313012

Refit

1. Fix the rear door full range speaker to the rear door, fit 3 screws and tighten to **1.5–2Nm**.
2. Connect the connector of rear door full range speaker.
3. Refit the rear door interior trim panel.

☞ **Refit of Rear Door Interior Trim Panel**

4. Connect the battery negative.

www.cargeek.ir

www.cargeek.ir

Roof Antenna Connecting Cable

Remove

1. Disconnect the battery negative.
2. Remove the roof interior trim.

☞**Roof Interior Trim Remove**

3. Disconnect the connector from the roof antenna.
4. Remove 1 nut fixing the roof antenna to the body and take off the roof antenna.

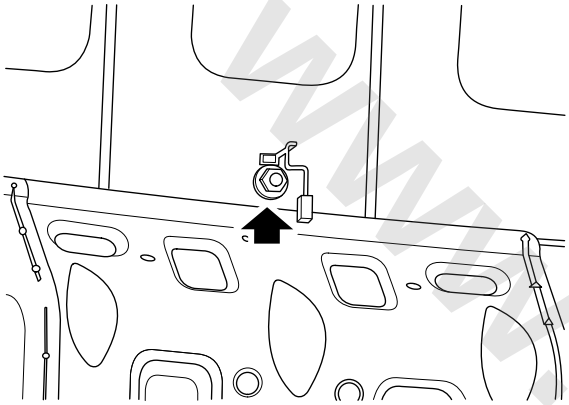

S7313013

Refit

1. Secure the roof antenna to the body, fit 1 nut and tighten to **7–10Nm**.
2. Connect the connector of the roof antenna.
3. Refit the roof interior trim.

☞**Refit of Roof Interior Trim**

4. Connect the battery negative.

Communication Module

Remove

1. Disconnect the battery negative.
2. Remove the glove box assembly.

☞**Glove Box Remove**

3. Remove the 2 screws fixing the frame of the glove box to the instrument panel.

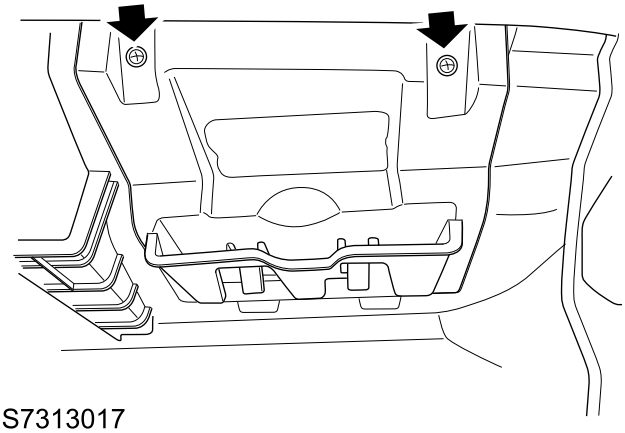

S7313017

4. Disconnect the connector of the glove box lamp, and remove the glove box frame assembly.
5. Disconnect the connector of the communication module and 2 connectors of the communication antenna.
6. Remove 2 nuts fixing the communication module to the instrument panel beam, and remove the communication module.

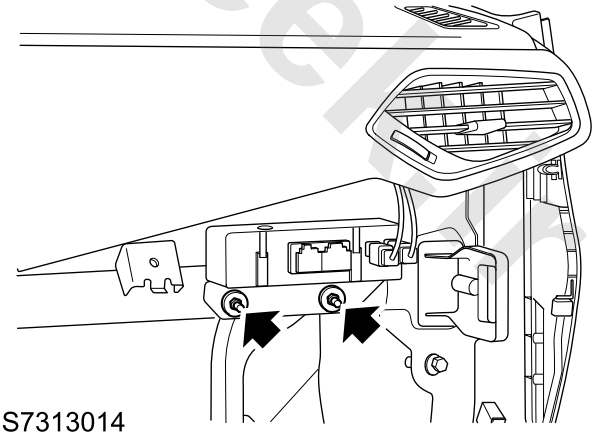

S7313014

Refit

1. Locate the communication module to the instrument panel beam, fit 2 nuts and tighten to **7–10Nm**.
2. Connect the connector of the communication module and 2 connectors of the communication antennas.
3. Connect the battery negative.
4. Programme and code the TBOX.

☞**Self-learning and Adjustment, Programming and Coding – TBOX Replacement**

www.cargeek.ir

www.cargeek.ir

5. Connect the connector of the glove box lamp.
6. Fix the frame of the glove box to the instrument panel, fit 2 screws and tighten the screw.
7. Fit the glove box assembly.

☞Glove Box Assembly Refit

Replacement and Activation of Communication Player/Communication Module

- If the problem can be solved by reference to the Troubleshooting Manual, repair the vehicle according to the relevant procedures and return the vehicle to the customer after repair.
- If the problem cannot be solved by reference to the Troubleshooting Manual, the communication player or communication module fails, please replace it.

Procedures for replacement and activation are as follows:

1. Remove the corresponding module according to replacement requirements.
   a. If the communication player shall be replaced, remove the communication player from the vehicle.

☞Communication Player Remove

   b. If the communication module shall be replaced, remove the communication module from the vehicle.

☞Communication Module Remove

2. Record the relevant information of the part to be replaced and report the information to the SAIC Self-service System.
   a. If the communication player shall be replaced, record the **VIN** and serial number of the old/new communication players, and confirm the above information is reported to the system.
   b. If the communication module shall be replaced, record the **VIN**, serial number of the old/new communication modules, old ICCID serial number, new ICCID serial number and phone number, and confirm the above information is reported to the system.
3. Fit the corresponding module according to replacement requirements.
   a. If the communication player is replaced, fit the new communication player to the vehicle.

☞Communication Player Refit

   b. If the communication module is replaced, fit the new communication module to the vehicle.

☞Communication Module Refit

4. For application of an activation code, please go to the SAIC Remote Activation System.
   a. If the communication player is replaced, the background will replace the old communication player with the new one and disable the communication player and communication module.
   b. If the communication module is replaced, the background will replace the old communication module with the new one and disable the communication player and communication module.
5. The background will create an activation code and send it to the cell phone designated by the user.
6. Input the activation code into the communication player. if the activation is successful, the background activates the communication player and communication module, and gives prompts to indicate completion of the operation.

Restart

1. Start the diagnostic tools, progress the 'Diagnostic - Veh.Scan - Start Scan' after identify the vehicle.
2. Restart TBOX. Use the diagnostic tools, progress the 'Routines - Reset Adaptions- Restart TBOX', Restart the TBOX according to the direction.

www.cargeek.ir

www.cargeek.ir

Communication Module Battery

Remove

1. Remove the communication module.

☞**Communication Module Remove**

2. Release 2 screws of the cover plate of the communication module battery and remove the cover plate.

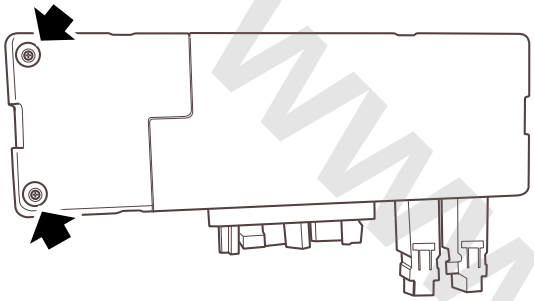

S7313011

3. Disconnect the battery connector to remove the battery.

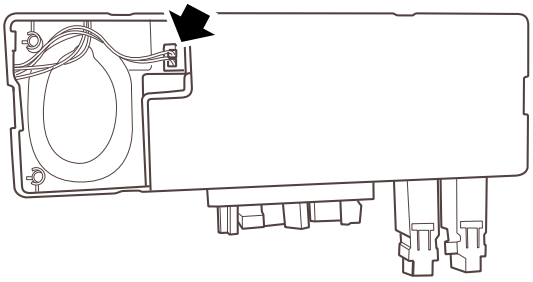

S7313012

Refit

1. Insert the battery into the communication module, and connect the battery connector.
2. Replace the battery cover, fit and tighten 2 screws.
3. Refit the communication module.

☞**Communication Module Refit**

4. Conduct the battery life calibration operation on the TBOX.

☞**Self-learning and Adjustment, Programming and Coding - TBOX Battery Life Calibration**

Microphone

Remove

1. Disconnect the battery negative.
2. Remove the front reading lamp assembly.

☞**Front Reading Lamp Assembly Remove**

3. Disconnect the microphone connector.
4. Release the clips securing the microphone to the front reading lamp assembly and remove the microphone.

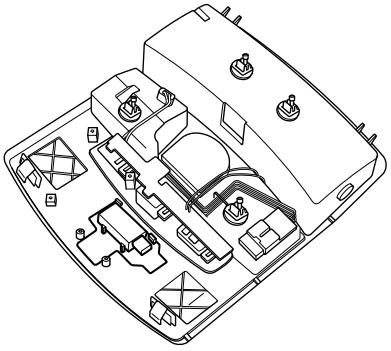

S7313015

Refit

1. Insert the microphone to the front reading lamp slot.
2. Connect the microphone connector.
3. Refit the front reading lamp assembly.

☞**Front Reading Lamp Assembly Refit**

4. Connect the battery negative.

www.cargeek.ir

www.cargeek.ir

Communication Antenna

Remove

1. Remove the instrument panel assembly.

☞ **Instrument Panel Assembly Remove**

2. Disconnect 2 harness connectors (1) of the communication antenna from the communication module.

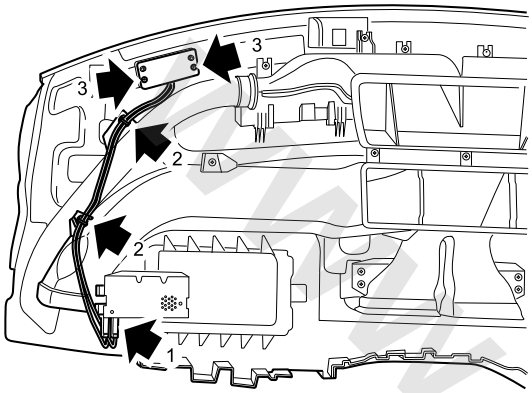

S7313021

3. Remove 2 harness clips (2) securing the communication antenna harness on the instrument panel assembly.
4. Remove 2 screws (3) securing the communication antenna on the instrument panel assembly.
5. Remove the communication antenna.

Refit

1. Place the communication antenna in the right front of the interior instrument panel, and locate with 2 locating pins.
2. Locate the communication antenna to the instrument panel, fit 2 screws and tighten to **1.3–1.9Nm**.
3. Secure the communication antenna harness on the instrument panel assembly and fit 2 harness clips.
4. Insert 2 harness connectors of the communication antenna into the communication module interface.
5. Fit the instrument panel assembly.

☞ **Instrument Panel Assembly Refit**

www.cargeek.ir

www.cargeek.ir

Displays and Gages

Specifications

Torque

Description	Value
Screw-A	1.3–1.9Nm

www.cargeek.ir

www.cargeek.ir

www.cargeek.ir

Description and Operation

System Layout

Instrument Pack Layout

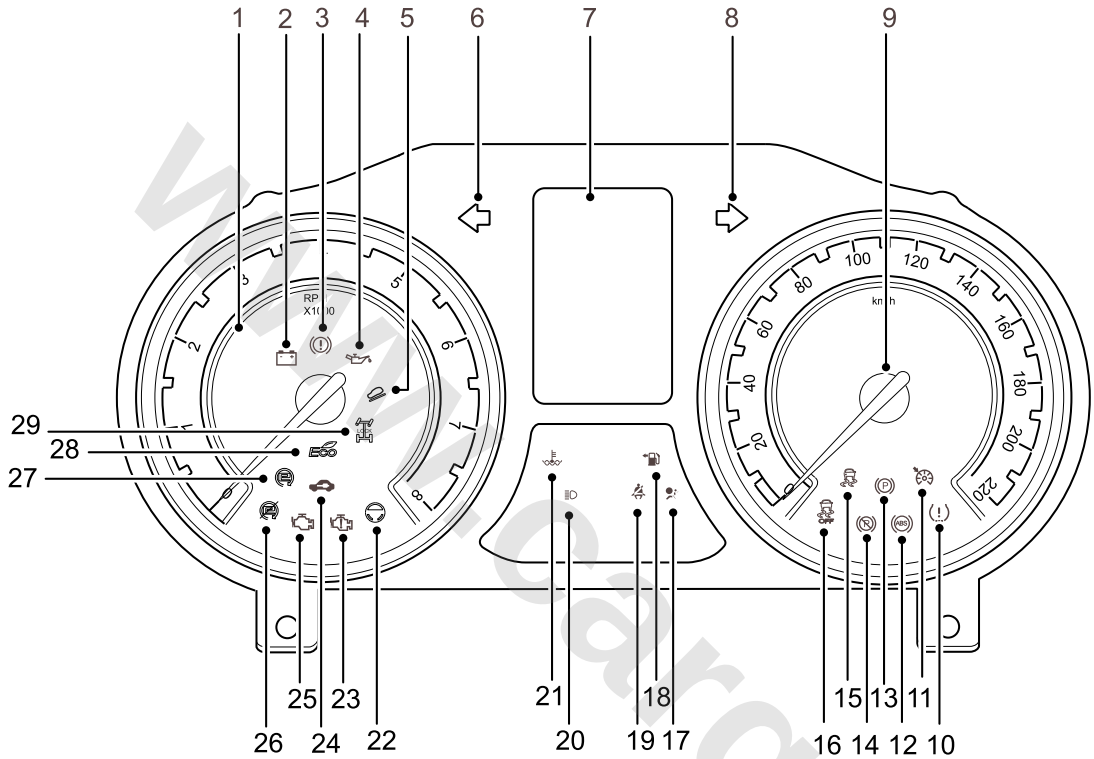

S7110002

1. Tachometer
2. Alternator Charge Warning
3. Brake System Warning
4. Low Oil Pressure Warning Lamp
5. HDC ON/Warning (if fitted)
6. Direction Indicator Lamp (left)
7. Information Center
8. Direction Indicator Lamp (right)
9. Speedometer
10. **TPMS** Warning lamp (if fitted)
11. Cruise Control Indicator Lamp (if fitted)
12. ABS Warning
13. **EPB** Status/Auto Hold Status Indicator Lamp
14. **EPB** Warning
15. **SCS**/**TC** Warning Lamp
16. **SCS**/**TC** OFF Warning Lamp
17. SRS Warning Lamp
18. Low Oil Level Warning Lamp
19. Untied Seat Belt Warning Lamp
20. High Beam Indicator Lamp
21. Engine Coolant Temperature Warning Lamp
22. **EPS**/**SAS** MIL
23. Drive By Wire Warning
24. Engine Anti-theft System Warning Lamp
25. Malfunction Indicator Lamp Warning
26. Stop/Start System Warning
27. Stop/Start System Status Indicator
28. ECO Indicator Lamp
29. TCCM ON/Warning (if fitted)

www.cargeek.ir

www.cargeek.ir

Instrument Unit Layout

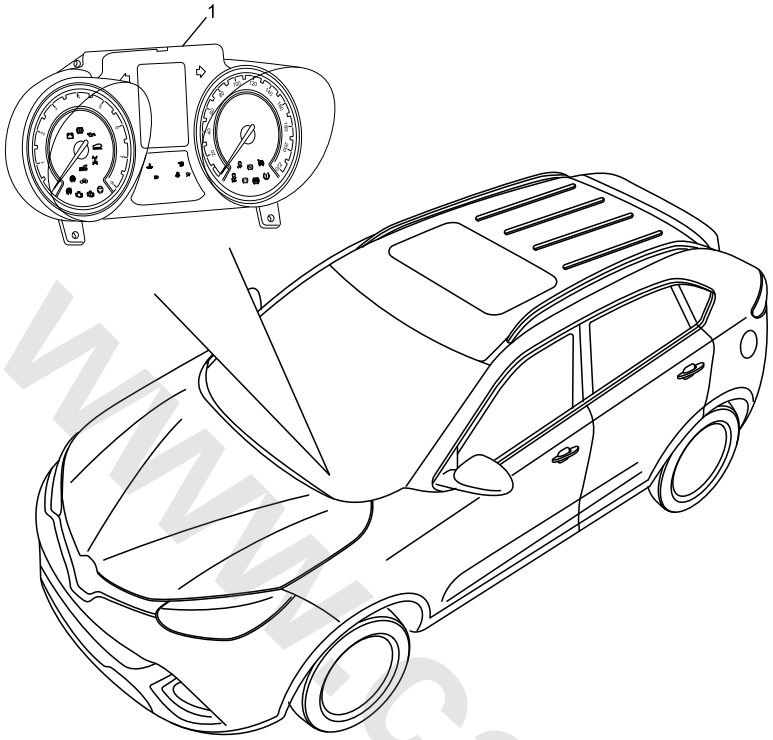

S7110001

1. Instrument Pack

www.cargeek.ir

www.cargeek.ir

www.cargeek.ir

System Control Diagram

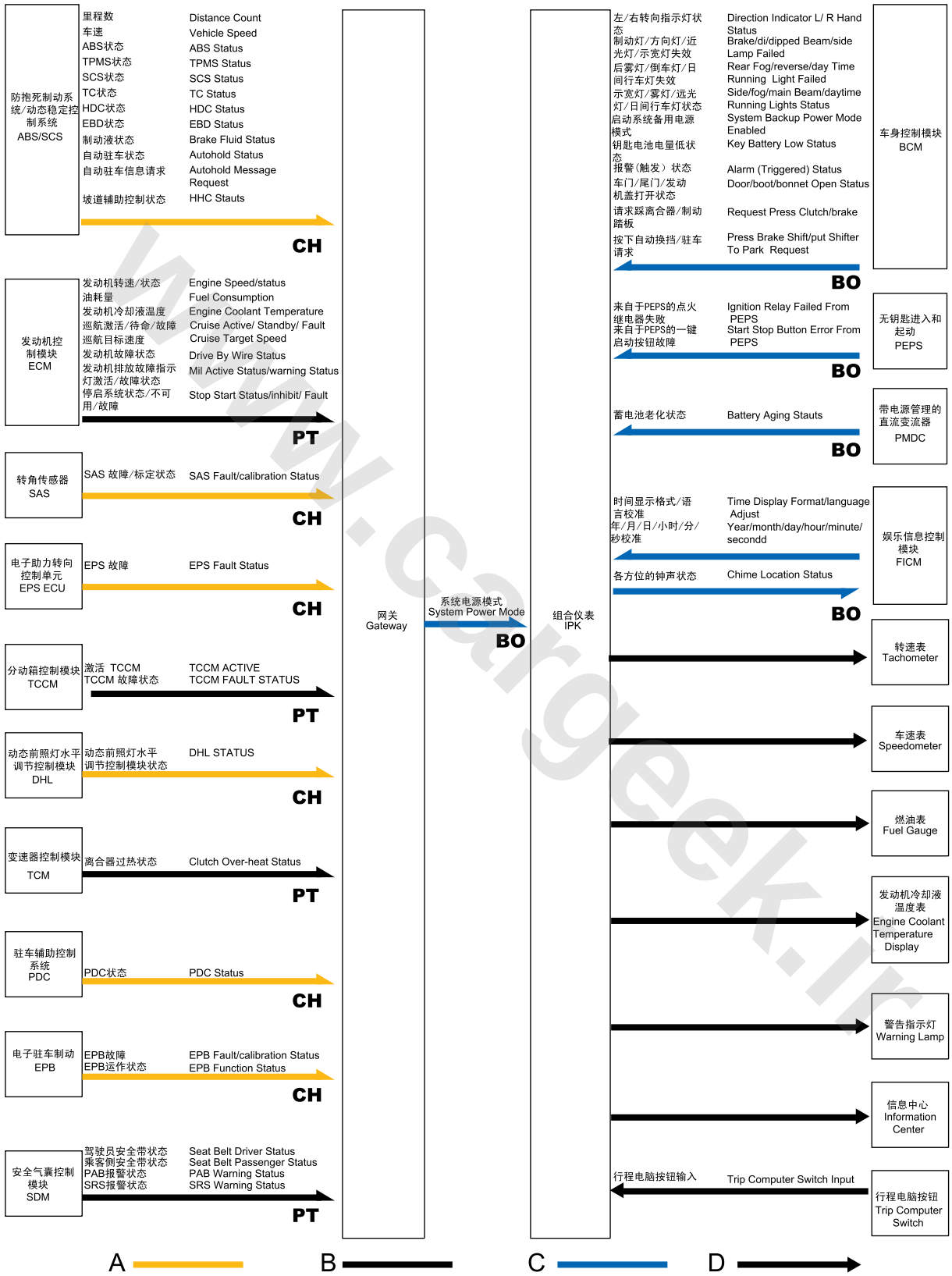

S7111001

A = Chassis HS CAN Bus; B = Power Train HS CAN Bus; C = Body HS CAN Bus; D = Hard Wire

www.cargeek.ir

Description

Overview

The instrument pack is connected to the body harness by one connector and to the instrument panel assembly by 4 screws. The instrument pack is a packaged component (assembly), so it cannot be removed for maintenance. Reset the function of the trip computer by the trip computer button or set it according to individual needs. For specific procedures, please refer to "Information Center" under this section.

Note: *After tire replacement or inflation, use the menu on the screen of the information center to reset the TPMS.*

Display Information

The IPK provides different vehicle parameters, such as speed, engine speed, etc. It provides visual information for the driver by LCD, analog dial and warning lamps, etc. It also gives acoustic warnings by the instrument speaker.

The information displayed mainly consists of the followings:

- Tachometer
- Speedometer
- Indicator lamp, warning lamp
- Information Center

Communication Signal

The instrument pack receives/sends information via the high speed **CAN**. Node of the HS **CAN** includes PMDC, **ECM**, PEPS and **BCM**, etc. By the GW, the IPK receives the HS **CAN** signal from the **ECM**, **TCM**, **SCU**, **SDM**, **SCS**, **EPS**, **SAS**, DHL, **EPB** and **PDC**, etc. It receives the **LIN** bus signal from the immobilizer module through the **BCM**. The table below shows the signals received and sent by the instrument pack.

Information type	Transmitted by	Received by
System Power Mode	Gateway	Instrument Pack
Wheel Speed Pulse Signal	**ABS /SCS**	Instrument Pack
ABS MIL	**ABS**	Instrument Pack
Status of Seat Belt (driver/passenger)	**SDM**	Instrument Pack
Airbag Warning Lamp	**SDM**	Instrument Pack
Door Status	**BCM**	Instrument Pack
Cruise Control State	**ECM**	Instrument Pack
Drive By Wire Warning	**ECM**	Instrument Pack
Malfunction Indicator Lamp Warning	**ECM**	Instrument Pack
Oil Pressure Status	**ECM**	Instrument Pack
Stop/Start Status/Disable	**ECM**	Instrument Pack
Stop/Start Failure	**ECM**	Instrument Pack
EPS Malfunction Condition	**EPS**	Instrument Pack
SAS Malfunction Condition	**SAS**	Instrument Pack
TPMS Status	**SCS**	Instrument Pack
HDC Status	**SCS**	Instrument Pack
SCS Status	**SCS**	Instrument Pack
TC Status	**SCS**	Instrument Pack
SCS Mode	**SCS**	Instrument Pack
TC Mode	**SCS**	Instrument Pack
EBD Status	**SCS**	Instrument Pack
Brake Fluid State	**SCS**	Instrument Pack
High Beam State	**BCM**	Instrument Pack
Status of Right/Left Direction Indicator Lamp	**BCM**	Instrument Pack
Key Battery Low	**BCM**	Instrument Pack
Anti-theft Alarm Status	**BCM**	Instrument Pack
Tail Gate Open	**BCM**	Instrument Pack
TCCM Malfunction Condition	**TCCM**	Instrument Pack
EPB Operation State	**EPB**	Instrument Pack
Auto Hold State	**SCS**	Instrument Pack
EPB Failure	**EPB**	Instrument Pack
Engine Speed	**ECM**	Instrument Pack
Start by Key	**ECM**	Instrument Pack

www.cargeek.ir

www.cargeek.ir

Information type	Transmitted by	Received by
Request for Depressing Clutch	**BCM**	Instrument Pack
Request for depressing Brake Pedal	**BCM**	Instrument Pack
No key is detected, please depress the brake pedal	**BCM**	Instrument Pack
Close the driver door and start the vehicle again	**ECM**	Instrument Pack
Fasten the seat belt and try to start it again.	**ECM**	Instrument Pack
Restart from N gear.	**ECM**	Instrument Pack
Stop/Start ON/OFF Status	**ECM**	Instrument Pack
HHC Status	**SCS**	Instrument Pack
Locked	**BCM**	Instrument Pack
Request for pressing the start stop button to stop the engine.	**BCM**	Instrument Pack
Request for removing the smart key	**BCM**	Instrument Pack
Request for shifting to P gear.	**BCM**	Instrument Pack
smart key is not detected.	**BCM**	Instrument Pack
Request for placing the smart key in the spare coil.	**BCM**	Instrument Pack
smart key is detected inside the vehicle.	**BCM**	Instrument Pack
IGN Relay Failure	**BCM**/ PEPS	Instrument Pack
SSB Failure	PEPS	Instrument Pack
Status of Width Lamp	**BCM**	Instrument Pack

Information type	Transmitted by	Received by
Status of Front/Rear Fog Lamp	**BCM**	Instrument Pack
Status of Daytime Running Lamp	**BCM**	Instrument Pack
Status of Washer Fluid Level	**BCM**	Instrument Pack
DHL Status	DHL	Instrument Pack
Aged Battery	PMDC	Instrument Pack
Hot Clutch	**TCM**	Instrument Pack

Harness Connector

Location Diagram of Instrument Pack Harness Connector

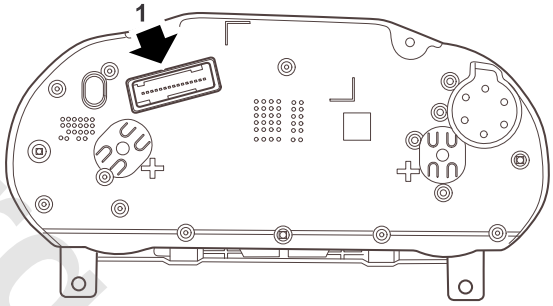

S7113001

1. Instrument Pack Harness Connector

End View and Pin Information of IPK Harness Connector FA029

Pin No.	Description
1	KL.30
2	KL.31
3	—
4	—
5	KL.15
6	Alternator (if fitted)
7	—
8	—
9	—
10	—
11	—
12	—
13	—

www.cargeek.ir

www.cargeek.ir

Pin No.	Description
14	—
15	—
16	—
17	—
18	—
19	—
20	—
21	—
22	Fuel Sensor +
23	Fuel Sensor -
24	Status Switch Output of Auto Hold
25	—
26	Body HS **CAN** High
27	Body HS **CAN** Low
28	—
29	Trip Computer Button Input
30	—
31	—
32	—

The instrument pack includes the following display functions:

Tachometer

The tachometer indicates engine speed in RPM (X1000). The red section of the high-speed end of the tachometer is used to warn the driver high engine speed can damage the engine. When the ignition switch is in ON position, the instrument pack uses HS **CAN** bus to receive the engine speed signal from the **ECM**.

Speedometer

The speedometer indicates vehicle speed in km/h. The maximum vehicle speed indicated on the speedometer is 220 km/h.

ABS ECU calculates vehicle speed by collecting the wheel speed pulse signal. The instrument pack receives vehicle speed from the **ABS ECU** via the HS **CAN** bus.

Alarm Display

Cruise Control Indicator - Green/Yellow (if fitted)

When the ignition switch is in "ON" position, the lamp illuminates for self-test, it is green for the first half cycle and yellow for the second half cycle, and the lamp goes out after self-test. This lamp is used to inform the driver of the current status of the cruise control system.

When the cruise speed cannot be enabled after the cruise button is pressed, the lamp is green.

When the cruise control system is working, the lamp is yellow, which indicates the system is activated. Preset the vehicle speed by the trip computer button, refer to "Information Center" under this section. Once the target vehicle speed is set, the cruise control system will maintain vehicle speed within the set range.

If the **EMS** detects failure of the cruise control, after the green indicator lamps is disabled, the yellow indicator lamp will flash 3 times and send audible warning.

Engine Coolant Temperature Warning Lamp - Red

With the ignition switch in "ON" position, the lamp illuminates for self-test and it will extinguish after self-test.

When high engine coolant temperature is detected, the lamp illuminates with an audible warning. When the temperature keeps increasing, repetitive audible warning will occur, and the lamp keeps flashing.

If the engine coolant temperature drops from a fairly high level to a high level, the lamp is normally ON.

Drive by Wire Warning - Yellow

With the ignition switch in "ON" position, the lamp illuminates for self-test and it will extinguish after self-test. If the lamp remains ON after self-test or illuminates during driving, the **EMS** includes faults that adversely affect the engine performance.

Malfunction Indicator Lamp Warning - Yellow

With the ignition switch in "ON" position, the lamp illuminates for self-test and it will extinguish after engine start. If the lamp remains ON after engine start or illuminates during driving, the **EMS** includes faults that adversely affect engine performance and emission.

Alternator Charge Warning - Red

With the ignition switch in "ON" position, the lamp illuminates for self-test and it will extinguish after engine start. If the lamp remains ON after engine start or illuminates during driving, the alternator fails. For vehicles with PMDC, when the information center displays "Power Low Partial Device Limited" in yellow and gives audible warning, the battery power provided by the alternator is low, the power load flow contains medium risk and the PMDC will cancel some power load. When the information center displays "Power Low

www.cargeek.ir

www.cargeek.ir

Partial Device Closed" in yellow and sends audible warning, the power load flow contains high risk.

Low Oil Pressure Warning - Red

With the ignition switch in "ON" position, the lamp illuminates for self-test and it will extinguish after engine start. If the lamp remains ON after engine start or illuminates during driving, the oil pressure is low, which may damage the engine.

Intelligent Stop-Start Energy-Saving System Status - Green (if fitted)

With the ignition switch in "ON" position, the lamp illuminates for self-test and it will extinguish after self-test. This lamp tells the driver if the current intelligent stop/start energy saving system controls the engine. If the intelligent stop-start energy saving system is activated, the lamp illuminates. If the status of the intelligent stop-start energy saving system changes from "activated" to "disabled", the lamp will flashand then extinguish.

Intelligent Stop-Start Energy-Saving System Malfunction Warning - Yellow (if fitted)

With the ignition switch in "ON" position, the lamp illuminates for self-test and it will extinguish after self-test. After self-test, if the lamp remains ON or illuminates during driving, the intelligent stop/start energy saving system fails and the system will send acoustic alarm.

EPS/SAS Warning - Yellow/Red

When the ignition switch is in "ON" position, the lamp illuminates for self-test, it is yellow for the first half cycle and red for the second half cycle, and the lamp extinguishes after self-test.

When general **EPS** fault occurs, the lamp is yellow. When severe **EPS** fault occurs, the lamp is red and flashes.

After engine start, if the SAS fails, the warning lamp is red.

TPMSWarning Lamp - Yellow (if fitted)

With the ignition switch in "ON" position, the lamp illuminates for self-test and it will extinguish after self-test. After self-test, if the lamp remains ON, the **BCM** receives a **TPMS** leak signal from the **SCS**.

If the system fails, the lamp is normally ON after a 90s' flash with audible warning.

When the pressure of the four tires achieves the normal value, reset the TPMS, refer to "Information Center" under this section. If the instrument can receive correct feedback from the **SCS ECU**, the information center will display "TPMS Reset OK" in red for about 2s. On the contrary, the information center displays "TPMS Reset Fail" in red.

ABS Warning- Yellow

With the ignition switch in "ON" position, the lamp illuminates for self-test and it will extinguish after self-test. After self-test, if the lamp remains ON or illuminates during driving, the ABS fails.

HDC ON/Warning — Green/Yellow (if fitted)

When the ignition switch is in "ON" position, the lamp illuminates for self-test, it is green for the first half cycle and yellow for the second half cycle, and the lamp extinguishes after self-test.

When the HDC button is pressed, the lamp is green, which indicates the HDC is in STANDBY state. When the green lamp flashes, the current status is HDC. When the HDC button is pressed again, the lamp is disabled, which indicates the HDC is disabled.

If the lamp is yellow, the HDC fails, after engine start, the information center will show "Hill Descent Control Fail" and send acoustic alarm.

If the yellow lamp flashes, the HDC is temporarily disabled.

SCS/TC Warning Lamp - Yellow

With the ignition switch in "ON" position, the lamp illuminates for self-test and it will extinguish after self-test. After self-test, if the lamp remains ON or illuminates during driving, the system fails (for example, auto hold failure). After engine start, the information center will show "Stability Control Fail" or "Traction Control Fail" with audible warning. If the warning lamp flashes during driving, the system is controlling the **SCS/TC** for the driver.

SCS/TC OFF Warning Lamp - Yellow

With the ignition switch in "ON" position, the lamp illuminates for self-test and it will extinguish after self-test. After self-test, if the lamp remains ON, the system does not control the corresponding components. After engine start, the information center will show "Stability Control Off" or "Traction Control Off" and send acoustic alarm.

Brake System Warning- Red

With the ignition switch in "ON" position, the lamp illuminates for self-test and it will extinguish after self-test. After self-test, the lamp remains ON or illuminates during driving, the brake fluid of the brake system is insufficient or the **EBD** fails. After engine start, if **EBD** failure or low brake

www.cargeek.ir

fluid level occurs, the information center will show "Brake Fail" with audible warning. In this case, please check the brake fluid level. If the lamp remains ON, Stop the car as soon as safety permits and seek an MG Authorised Repairer at the earliest opportunity.

Seat Belt Warning - Red

With the ignition switch in "ON" position, the lamp illuminates for self-test and it will extinguish after self-test. After self-test, if the driver or front passenger does not tie the seat belt, the lamp flashes with repetitive warnings until the driver or front passenger ties the seat belt, or the warning stops (appr. 5min). After engine start, if the seat belt remains not tied, the information center displays "Fasten Seat Belt" or "Fasten Passenger Seat Belt". After the alarm stops, if the seat belt remains not tied, the flashing lamp illuminates.

Airbag Warning - Red

With the ignition switch in "ON" position, the lamp illuminates for self-test and it will extinguish after self-test. After self-test, if the lamp remains ON or illuminates during driving, the SRS fails. The information center displays "Airbag Fault" and provides acoustic alarm within several seconds since the engine is started. If this occurs, please contact an authorized local after-sales service center immediately, otherwise, the SRS may not work in a collision.

With the ignition switch in "ON" position, the IPK will keep monitoring the warning lamp. If any fault occurs, the information center shows "Airbag Lamp Fail", and it then shifts the message into a static icon.

High Beam Indicator - Blue

With the ignition switch in "ON" position, the lamp illuminates for self-test and it will extinguish after self-test. When the headlights is enabled, the indicator lamp illuminates. To avoid disturbing the driver, for example, frequently switch the high beam and low beam when two vehicles from the opposite side meet.

Direction Indicator - Green

With the ignition switch in "ON" position, the lamp illuminates for self-test and it will extinguish after self-test. The left/right direction indicator lamps are at the top of the IPK, which are indicated by direction arrows. When the direction indicator lamps flash, the lamp on the corresponding side also flashes. If the hazard warning lamp is enabled, the left/right direction indicator lamps flash with audible warning. If the direction indicator lamp flashes very rapidly, the direction lamp of the corresponding side fails.

Engine Immobiliser System Warning - Red

With the ignition switch in "ON" position, the lamp illuminates for self-test and it will go out after self-test. If the engine Immobiliser system cannot identify the key in the ignition switch, the lamp illuminates, and the information center displays "Invalid Key" in yellow.

When the **BCM** receives low power signal from the remote key, the lamp flashes and the information center displays "Key Battery Low" in yellow.

When the door is open and the alarm is triggered, the lamp flashes and the information center shows "Alarm Triggered" with audible warning.

TCCM ON/Warning — Yellow/Green (if fitted)

When the ignition switch is in "ON" position, the lamp illuminates for self-test, it is green for the first half cycle and yellow for the second half cycle, and the lamp goes out after self-test.

If the lamp is green, the TCCM is activated and the information center shows "4WD Lock On" in yellow. If the lamp is yellow, the TCCM fails. After the engine is started, the information center displays "4WD Fail" with audible warning.

EPB Status/Auto Hold Indicator - Red/Green

When the ignition switch is in "ON" position, the lamp illuminates for self-test, it is green for the first half cycle and red for the second half cycle, and the lamp extinguishes after self-test.

After self-test, if the lamp is red, the **EPB** is enabled; if the red lamp flashes, the EPB is not tightened or it is performing dynamic braking.

When the auto hold is working, the green indicator lamp illuminates.

Electronic Parking Brake (EPB) System Fault Warning - Red

With the ignition switch in "ON" position, the lamp illuminates for self-test and it will extinguish after self-test. After self-test, if the lamp remains ON or illuminates during driving, the EPB fails or is in diagnostic state.

Low Fuel Warning Lamp - Yellow

With the ignition switch in "ON" position, the lamp illuminates for self-test and it will extinguish after self-test.

When fuel level is low, the lamp illuminates, the information center shows "Please Refuel!" in yellow. When the fuel level

www.cargeek.ir

keep going down, the lamp flashes and the information center shows "Low Fuel" in red. After refill, the lamp will be disabled. If it remains ON, seek MG Authorised Repairer at the earliest opportunity.

When the IPK cannot receive signals from the fuel sensor, the lamp flashes and the information center displays "Fuel Sensor Fail" in yellow and provides an acoustic alarm. Then it shifts the message into a static icon.

ECO Indicator Lamp - Green

With the ignition switch in "ON" position, the lamp illuminates for self-test and it will go out after self-test. This lamp tells the driver the vehicle is now in ECO mode.

Information Only Displayed on Main Zone of Information Center

The following alarm information is shown on the information center, but it does not accompany any indicator lamp.

Use Key to Start

The instrument receives the **CAN** signal from the **ECM** through the GW. When the vehicle shall be restarted with the key, the information center displays "Use Key to Start" in yellow and sends acoustic alarm. Then it shifts the message into a static icon.

Please Press Brake to Start

The instrument receives the request signal from the **CAN** bus through the **BCM**. When clutch failure is detected during engine start, the information center displays the corresponding information "Please Press Brake to Start".

No Key Press Brake to Restart

The instrument receives request for brake application through the **BCM** and displays "No Key Press Brake to Restart".

Close Driver Door

The instrument receives the **CAN** bus signal from the **ECM** by the GW. When restarting of the intelligent stop-start energy saving system and open driver door are detected, the instrument displays "Close Driver Door" in yellow . Then it shifts the message into a static icon.

Fasten Seat Belt to Restart

The instrument receives the **CAN** bus signal from the **ECM** by the GW. If restarting of the intelligent stop-start energy saving system and untied driver seat belt are detected, the instrument displays "Fasten Seat Belt to Restart".

Select Neutral to Restart

The instrument receives the **CAN** signal from the **ECM** by the GW. When restarting of the intelligent stop-start energy saving system and other transmission gear instead of N gear are detected, the instrument shows "Select Neutral to Restart" in yellow , and it then shifts the message into a static icon.

Stop Start Off

The instrument receives the **CAN** signal from the **ECM** by the GW. When closed the intelligent stop-start energy saving system is detected, the instrument shows "Stop Start Off" in yellow.

Stop Start On

The instrument receives the **CAN** signal from the **ECM** by the GW. When open the intelligent stop-start energy saving system is detected, the instrument shows "Stop Start On" in yellow.

Auxiliary information for auto hold.

The instrument receives the **CAN** request signal from the **SCS** by the GW.

Fasten Seat Belt

When information/request of the auto hold is detected and the seat belt is not tied, the instrument shows "Fasten Seat Belt".

Please Press Brake

When information/request of the auto hold is detected and the brake pedal is not depressed, the instrument shows "Please Press Brake" and provides acoustic alarm, and it then shifts the message into a static icon.

Hill Hold Unavailable (if fitted).

The instrument receives the **CAN** bus signal from the **SCS** by the GW. When the hill hold control is invalid or is enabled by unusual procedures, the instrument shows "Hill Hold Unavailable" in yellow and sends acoustic alarm. Then it shifts the message into a static icon.

Information for open door/engine cover/tail gate.

The instrument receives the **CAN** signal of the door, engine cover and tail gate from the **BCM**. When the ignition switch is in "ON" position, if open door/engine cover/tail gate is detected, the alarm symbol will be displayed for 3s and an acoustic alarm occurs, then the symbol becomes a static icon.

www.cargeek.ir

www.cargeek.ir

When the vehicle speed exceeds 5**Km/h**, if open door/engine cover is detected, the alarm symbol will occur every 5s, and each time when it appears, an acoustic alarm can be heard. The alarm symbol gives 3 flashes until all doors/engine cover are closed.

Please Take Your Key (if fitted).

The instrument receives the **CAN** signal from the **BCM**. When the driver door is opened and the key remains in the ignition switch, the instrument shows "Please Take Your Key" and gives acoustic alarm.

Long Press Button Turn Engine Off (if fitted).

The instrument receives the **CAN** signal of the ignition switch alarm from the **BCM**. To remind the operator to press the start stop button to stop the engine, the instrument shows "Long Press Button Turn Engine Off".

Press Brake to Shift

The instrument receives the **CAN** signal from the **BCM**. The instrument displays "Press Brake to Shift" for the driver. Then it shifts the message into a static icon.

Take Smart Key Out of Backup Position (if fitted).

The instrument receives the **CAN** signal from the **BCM**. In order to remind the driver of the key, the instrument displays "Take Smart Key Out of Backup Position" .

Please Engage Park Gear

If the ignition switch is not in "ON" position and the shift lever is not in P gear, the instrument displays "Please Engage Park Gear" .

Smart Key Not Detected (if fitted).

The instrument receives the **CAN** signal from the **BCM**. In order to inform the driver that the signal of the intelligent key is not detected, the instrument displays "Smart Key Not Detected" . Then it shifts the message into a static icon.

Put Key Into Backup Position (if fitted).

If the instrument receives the **CAN** signal of undetected intelligent key from the **BCM**, it displays "Put Key Into Backup Position". Then it shifts the message into a static icon.

Ignition System Fault

If the instrument receives the **CAN** signal of ignition failure of the ignition relay from the **BCM** or PEPS, it displays "Ignition System Fault" .

Start Stop Button Fail (if fitted)

The instrument receives the status information of the SSB from the PEPS, when short to ground/battery information, start failure, break circuit and switch failure, etc occur, it displays "Start Stop Button Fail" .

Lamp Malfunction

The instrument receives the **CAN** signal of bulb failure or headlamp control from the **BCM** and monitors if the direction indicator lamp, brake lamp, low beam, position lamp, rear fog lamp and reverse lamp, etc are valid.

Information for illuminating lamp.

The instrument receives the status signal of the front fog lamp from the **BCM**. Once the front fog lamp is enabled, it displays "Front Fog Lamps On".

The instrument receives the status signal of the rear fog lamp from the **BCM**. Once the rear fog lamp is enabled, it displays "Rear Fog Lamps On".

The instrument receives the status signal of the width lamp from the **BCM**. Once the width lamp is enabled, it displays Sidelights On".

Information for off lamp (when removing the key).

The instrument receives the **CAN** signal from the **BCM**. When removing the ignition key, if the width lamp and license plate lamp are not cancelled, once the driver door is opened, the alarm is activated immediately. The instrument displays "Lights On" in yellow.

Washer Fluid Low

The instrument receives the **CAN** signal from the **BCM**, when low fluid level of the windshield washer is detected, it displays "Washer Fluid Low" in yellow and sends acoustic alarm. Then it shifts the message into a static icon.

Fuel System Fault

The instrument receives the **CAN** signal of the fuel pump relay from the **BCM**, when any failure is detected, it shows "Fuel System Fault" in yellow and sends acoustic alarm. Then it shifts the message into a static icon.

www.cargeek.ir

EPBAUX alarm

The instrument receives the **EPB** signal through the GW.

Park Brake Force not Enough

When the braking force is insufficient, the instrument displays "Park Brake Force not Enough" in red and sends acoustic alarm.

Press Brake Release EPB

When the intelligent stop/start energy saving system is restarted and the EPB is not released, the instrument displays "Press Brake Release EPB" in yellow. Then it shifts the message into a static icon.

Head Lamp Control Fault

The instrument receives the **CAN** signal from the DHL by the GW. When any failure is detected, the instrument shows "Head Lamp Control Fault" in yellow. Then it shifts the message into a static icon.

Warning for hot transmission

The instrument receives the **TCM** signal by the GW and monitors the percentage temperature and target temperature of the current clutch. When the transmission is hot, the instrument displays "Increase Speed or Stop Safely", "Stop Safely", "Please Wait" and "Ready for Drive Away", etc.

Overspeed warning

When the vehicle speed displayed exceeds the set limit, the instrument shows "Slow Down" in red and sends acoustic alarm. Then it shifts the message into a static icon.

Engage P or N to start

When the **BCM** determines the driver shall start from P/N gear, the instrument shows "Engage P or N to start" and provides acoustic alarm.

Please Initialize Driver Window

When the battery is reconnected after disconnection, the instrument displays "Please Initialize Driver Window" and sends acoustic alarm.

PEPS antenna failure (if any)

When the PEPS antenna fails, the instrument displays "PEPS Failure, Please Service!" and sends acoustic alarm.

Information Center - High Configuration

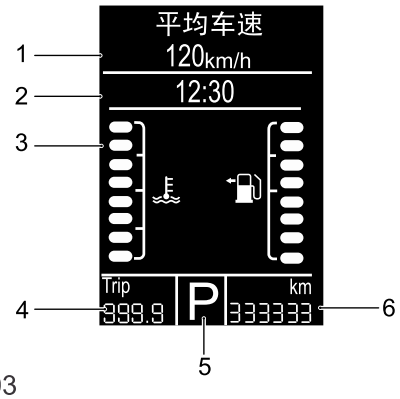

S7113003

1. Main Zone: next maintenance, warning, trip computer information, menu can be set according to individual needs.
2. Digital Clock
3. Engine Coolant Temperature gauge, fuel gauge
4. Trip 1
5. Gear display
6. odometer

Displayed in full screen: if the configuration is activated, when the ignition switch is turned on, the screen shows "SAIC".

Main Zone

In preview mode, this zone displays "Interval for Next Maintenance", then "Fuel Volume" (in X/8).

In delay mode, if the alarm is fitted, the information will be displayed according to the priority.

In standard mode, the main zone displays general information, including warning information, trip computer information and menu can be set according to individual needs.

Digital Clock

Current time is displayed. The IPK receives the time signal from the entertainment system, and the operation is synchronized with the time display of the entertainment system. When signal error of the entertainment system occurs, the system adjusts the current time automatically.

Engine Coolant Temperature gauge, fuel gauge

Engine Coolant Temperature Gauge

The Engine Coolant Temperature gauge is represented by the quantity of the segment to be illuminated, there are totally 8 segments.

When the engine is working at normal temperature, 1 ~ 6 white segments will be illuminated. When the 7th segment is illuminated, the red warning lamp for high Engine Coolant Temperature under the information center illuminates.

www.cargeek.ir

www.cargeek.ir

When the top segment is illuminated, the warning lamp for high Engine Coolant Temperature flashes.

When the **EMS** detects that the engine temperature sensor fails and sends invalid value to the IPK for several seconds, the 8 segments are all cancelled, the warning lamp flashes.

Fuel Gauge

The level of the remaining fuel in the fuel tank is represented by the quantity of the segment to be illuminated, there are totally 8 segments.

When only the bottom white segment is illuminated, the low fuel level warning lamp under the information center illuminates and an acoustic alarm can be heard. If the fuel keeps going down, the low fuel level warning lamp and the bottom white segment flash together, and repetitive acoustic alarm can be heard.

When the IPK detects that the fuel value read by the fuel sensor is out of the preset range, it will use the previous valid value. If there remains no valid value, after restarting the vehicle, the 8 segments are all cancelled, the yellow low fuel level warning lamp flashes .

Trip 1

When the ignition switch is in position 2, the zone will display information of trip 1.

Gear Display

When the ignition switch is in position 2, the shift lever position (P, R, N, D, 1, 2, 3, 4, 5, 6, W or S) of current AT will be displayed. If "EP" is displayed, the AT fails.

Odometer

This zone displays odometer.

Trip Computer Button

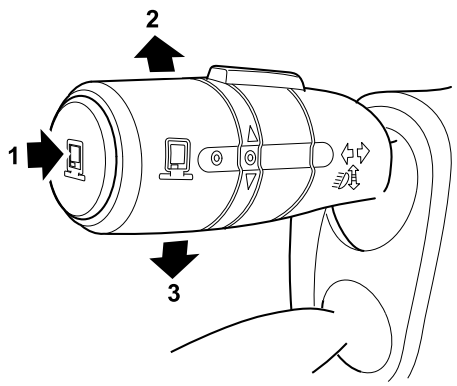

S7113005

1. Button at Top Lever Switch
2. Overturn Wheel Up
3. Overturn Wheel Down

The trip computer button is on the lamp lever switch.

Switch between the trip computer information and the menu can be realized by the up-and-down operation of the overturn wheel.

On the trip computer interface, long press the button at the top of the lever to reset the "average fuel", "average speed", "trip 2" and "current journey". Short press the button at the top of the lever to access the primary menu or go to the next menu from the previous menu. Select the "Esc" option to return to the previous menu, this can be realized by the button at the top of the lever.

Trip Computer Information

The trip computer shows the following information:

1. Digital Speed
2. Average Fuel
3. Fuel Consumption
4. Range to Empty
5. Average Speed
6. Trip 2
7. Current Journey
8. Last Journey

Digital Speed

It displays current vehicle speed (**Km/h**).

Average Fuel

It displays approximate average fuel consumption (**L**/100**km**). Average fuel consumption is calculated by different fuel consumptions/100km recorded since last resetting of the menu item.

Fuel Consumption

Instantaneous fuel consumption displays fuel consumption under current driving condition (**L**/hour).

Range to Empty

Driving mileage displays the approximate mileage without refueling (**km**). Driving mileage is calculated by the average of the fuel consumption and the remaining fuel in the fuel tank of the latest driving record.

Average Speed

Average vehicle speed displays the approximate average vehicle speed (**Km/h**). This value is derived from the accumulated mileage and ignition time recorded since last resetting.

Trip 2

It displays current mileage since last resetting (**km**).

Current Journey

It displays the duration, accumulated fuel consumption and distance of current trip since last trip resetting.

www.cargeek.ir

www.cargeek.ir

Last Journey

It displays the duration, accumulated fuel consumption and distance of the previous trip. After current mileage is reset, these value will be changed automatically.

Main Menu

Personalized setting can be made by the 4-level menu. The structure of the 4-level menu is as follows:

Level 1:

The menu of this level includes "Esc", "Speed Threshold", "Next Service", "Function Reset", "TPMS Reset" and "Display Setting".

Level 2:

Speed Threshold: select "Esc", adjust "Speed". Change speed by turning the overturn wheel (speed range: "off–5–190–off"), then press the button at the top of the lever to confirm it.

Next Service: it displays maintenance symbol, remaining mileage and estimated date of next maintenance. Press the button at the top of the lever to confirm "Esc" or "Reset".

Function reset: use this option to reset "Trip 1", "Trip 2", "Average Fuel", "Average Speed", "Current Journey" and "Last Journey". If all information of the trip computer shall be reset, select "All" and press the button at the top of the lever. Select "Esc" to return to the previous menu.

Display setting: "Esc", "Unit", "Trip Computer", "Illumination Color", "Backlight Illumination" ,"Illumination Lumina" and "Eco Reminder".

Level 3 and 4:

Unit: use this option to set the unit of the "Consumption" and "Distance". Unit of the "Consumption" includes "**L**/100**km**", "**Km/l**", "mpg (US)" or "mpg (UK)"; and the unit of the "Distance" involves "**km**" or "miles". Select "Esc" to return to the previous menu.

Trip computer: "Function Selection" and "Default Mode". Access "Function Selection" to select "Digital Speed", "Average Fuel", "Instantaneous Fuel", "Range to Empty", "Average Speed". "Trip 2", "Current Journey", "Last Journey", and select "Esc" to return to the previous menu. Access "Default Mode" to select "Blank", "History" and select "Esc" to return to the previous menu.

Illumination Color: "Red", "White" and "Sport Mode", and select "Esc" to return to the previous menu.

Illumination Lumina: the option displays illumination of current backlight and "+"/"-" symbol. Turn the overturn wheel to set the backlight illumination when necessary. There are totally 3 levels of illumination. Select "Esc" to return to the previous menu.

Illumination Lumina: it provides alerts for enabling or disabling the ECO mode.

Information Center - Low Configuration

The **LCD** of the information center displays the following information: Unlock status, trip 1, trip 2, driving mileage, illumination adjustment, average fuel consumption, average speed, overspeed alarm, total distance, next maintenance, gear information and clock/door ajar warning.

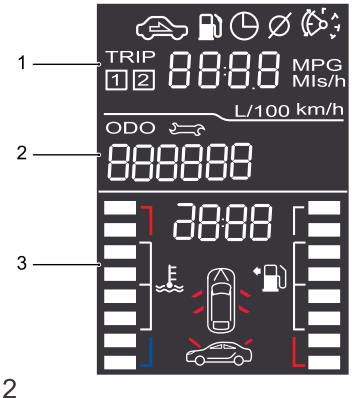

S7113012

1. Main zone of information center
2. Odometer/next service
3. Clock/door open warning

Trip computer button

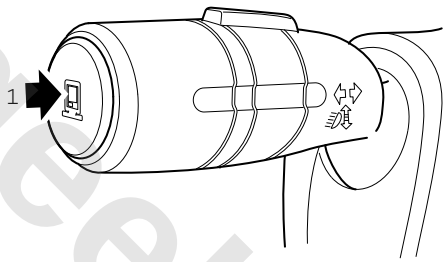

S7113005

The trip computer button is located at the end of the left lever switch, an it can be operated by long press (less than 1s) and long press (more than 2s). Short press the button to switch the option of the information center and long press the button to operate different options.

Main zone of information center

This zone displays the following information:

Trip 1 and 2

This option displays the total distance (km) of a specific trip and helps the driver to calculate refueling interval, driving time and distance (0–9999km). If the distance is less than 1000km, the value changes at a rate of 0.1km; if the distance is more than 1000km, the value changes at a rate of 1km. When the distance achieves 9,999km, the value is reset automatically. Trip 1 and 2 can be reset at any time, this makes recording of new distance possible.

www.cargeek.ir

www.cargeek.ir

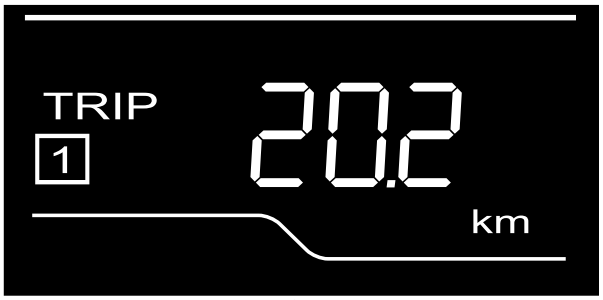

S742028

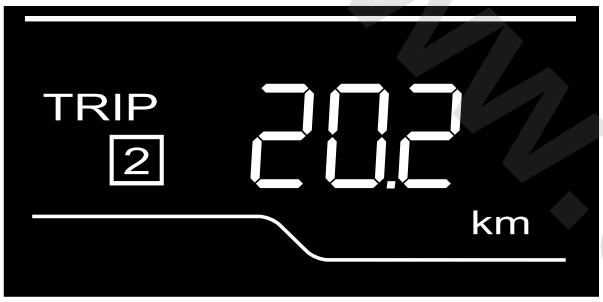

S742029

Range to Empty

This option automatically calculates and displays the driving mileage before the fuel tank is empty, the value will change accordingly after fuel refill.

Range to empty is derived from current fuel consumption and remaining fuel of the fuel tank.

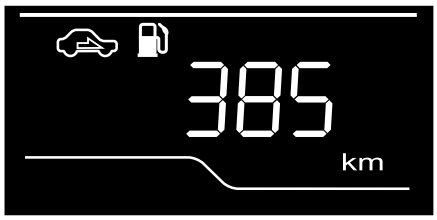

V1078

Brightness Adjustment

The brightness of the IPK includes day brightness and night brightness, when the width lamp switch is enabled, the default selection is night brightness.

Day brightness cannot be adjusted, for there is only one level of brightness. The night brightness has 3 levels, so it is adjustable. On driving mileage interface, long press the trip computer button to access the brightness adjustment interface, and each press of the trip computer button can increase one level of brightness. When adjusting the brightness, the driving mileage zone turns to brightness level. If the button is not pressed within about 6s, the system shifts to driving mileage automatically.

S742033

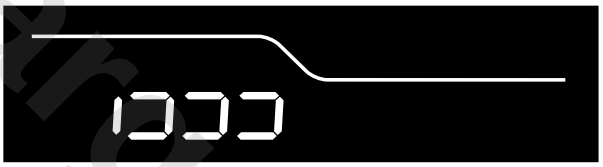

S742034

Average Fuel Consumption

This option indicates the average fuel consumption during driving which can be derived by dividing distance by fuel consumption.

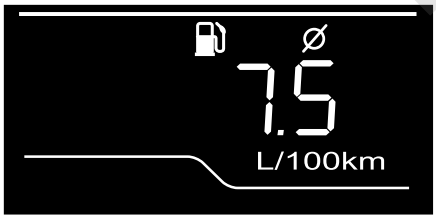

Note: *Fuel consumption is related to driving style, road condition, vehicle load, tire pressure, electrical equipment power, oil, etc.*

Instantaneous Fuel Consumption

It displays current fuel consumption when the engine is working.

www.cargeek.ir

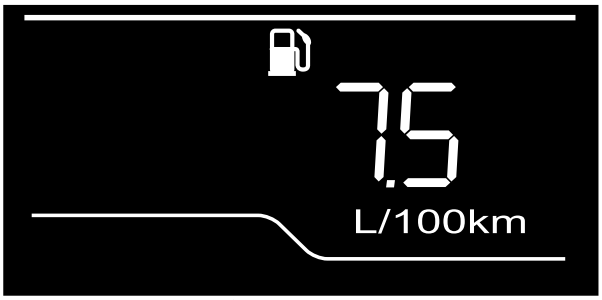

S742031

Driving time

It records the driving time when vehicle speed exceeds 5km/hr and ignition switch leaves position 2. It can be reset at any time, this makes calculation of the time for new trips or driving condition possible.

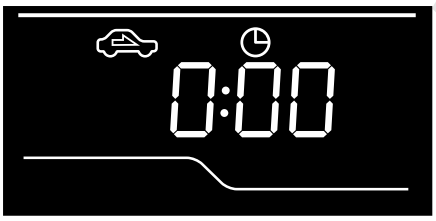

Digital clock setting

For vehicles with a radio, short press the trip computer button to access the interface for setting digital clock. Then long press the button to flash the value of HOUR, and short press it again, the value increases at an increment of +1. The setting range is 0 ~ 23. After the HOUR is set, long press trip computer button or do not touch any button for more than 5s to access minute setting. The value increases at an increment of +1. The setting range is 0 ~ 59. Finally, long press trip computer button or do not touch any button for more than 10s to complete the operation. The set time will be displayed on the digital clock zone of the information center.

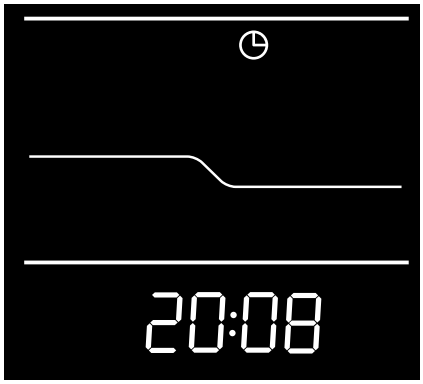

Average Speed

It refers to the average speed calculated after the engine is started. It can be reset at any time, this makes calculation of the average vehicle speed for new trips or driving condition possible.

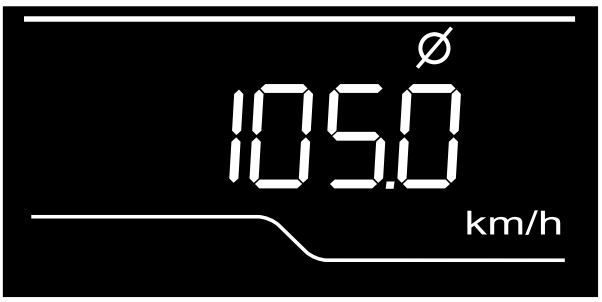

S742032

Speed Threshold

This function provides alarm when the vehicle speed exceeds the limit set by the driver. Short press trip computer button to access the interface of speed limiter alarm, and when long pressing the button, the value flashes, then set it. Each press of the button can increase the speed (5km/hr) , the speed range is 30 ~ 220 km/hr. When the speed exceeds 220km/hr, OFF is displayed, then the "Speed Limiter Alarm" is closed. After setting, long press trip computer button or wait for about 10s, the flashing value becomes normal value. During driving, when vehicle speed exceeds the preset limit, the set speed flashes continuously and an acoustic alarm can be heard.

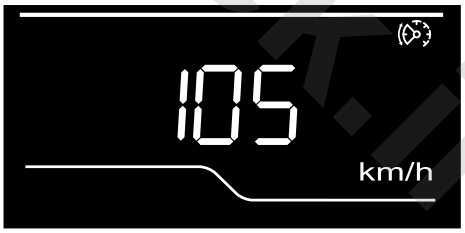

Odometer

When the ignition switch is in position 2, total distance is displayed.

www.cargeek.ir

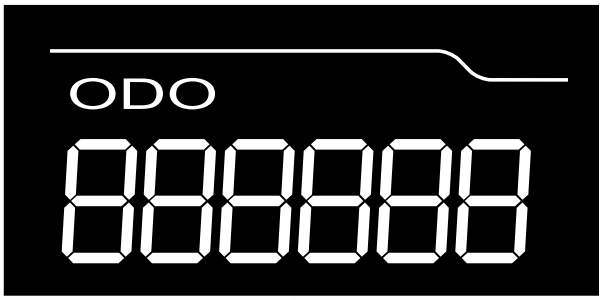

S742036

Next Service

It records the remaining distance for next service.

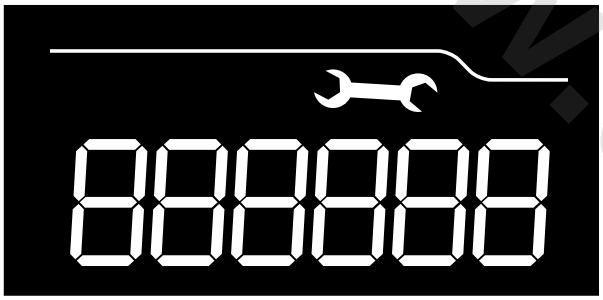

S742038

Digital clock

This function displays digital clock.

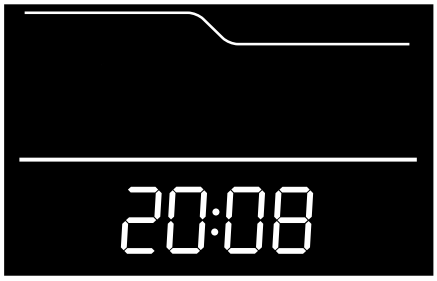

Warning symbol

Icon	Operation
	It warns the driver that there is one or more doors unclosed.
	It warns the driver the tail gate is unclosed.
	It warns the driver the bonnet is unclosed.

www.cargeek.ir

Operation

Operation Mode

The specific function of the instrument pack available at a given time depends on the position of the ignition switch.

The IPK receives the status information of the ignition switch via the **CAN** or hard wire input.

Sleep Mode

When the IPK fully enters into the sleep mode, the static current is minimum.

Standby Mode

Some functions can be realized.

Preview Mode

Place the ignition switch in the 2nd gear or press the trip computer button to wake up the IPK. The trip computer button can be used to wake up the IPK, including total odometer, accumulated odometer and digital clock, etc.

Activation Mode

All functions can be activated. For example, signal from the **CAN**, instrument warning lamp, engine tachometer, speedometer and system self-check function, etc.

www.cargeek.ir

www.cargeek.ir

www.cargeek.ir

Service Procedures

Instrument Pack

Remove

1. Disconnect the battery negative.
2. Remove the lower closure plate of the driver side instrument panel.

Driver Side Instrument Panel Lower Closure Plate Remove

3. Remove the left trim panel assembly of the instrument panel.

Instrument Panel Left Trim Panel Assembly Remove

4. Release the clip fixing the central panel assembly to the instrument panel assembly, and remove the central panel assembly.
5. Release the steering column to the lowermost position.
6. Remove 1 screw fixing the IPK cover to the instrument panel.

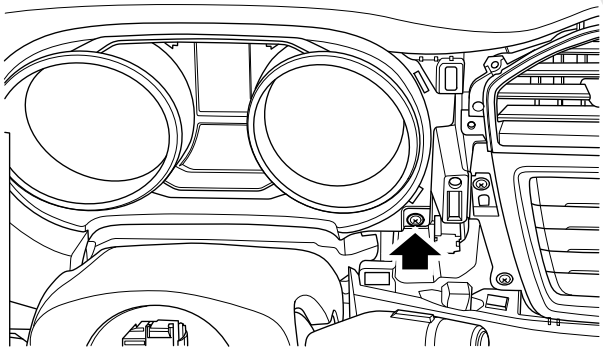

S2113103

7. Remove the 4 screws fixing the IPK to the instrument platform.

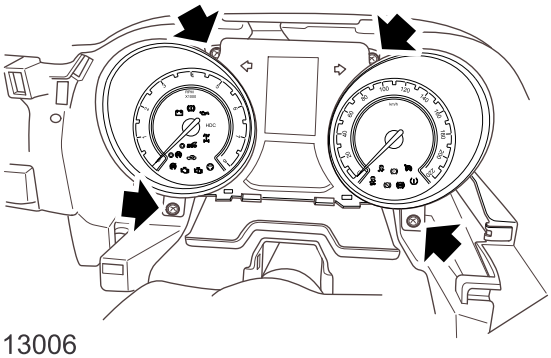

S7113006

8. Disconnect the connector of the IPK.
9. Remove the instrument pack.

Refit

1. Connect the battery negative.
2. Programme and code the instrument pack.

Self-learning/Programming - IPK Replacement

4. Check if the IPK can work, then fit the IPK to the instrument platform, fit 4 screws, tighten to **1.3–1.9Nm** and check the torque.
5. Fix the IPK cover to the instrument panel, fit 1 screw and tighten it.
6. Fit the steering column shield.
7. Release the steering column lever and move the steering column to the upper position.
8. Fit the central panel assembly.
9. Fit the left trim panel assembly of the instrument panel.

Instrument Panel Left Trim Panel Assembly Refit

10. Fit the lower closure plate of the driver side instrument panel.

Driver Side Instrument Panel Lower Closure Plate Refit

www.cargeek.ir

www.cargeek.ir

Fuse Box and Harness

Specifications

Torque

Description	Value
Nut-Body harness to battery fusebox	3.5–5.5Nm
Nut-Alternator to battery fusebox	5–7Nm
Nut-Battery anode to battery fusebox	7–10Nm
Screw-Front storage Box to Upper Control Panel	1.6–2.0Nm

www.cargeek.ir

www.cargeek.ir

www.cargeek.ir

Service Procedures

Engine Compartment Fuse Box

Remove

1. Disconnect the battery negative cable.
2. Release the clip fixing the upper cover of the fuse box to the fuse box, and remove the upper cover of the fuse box.

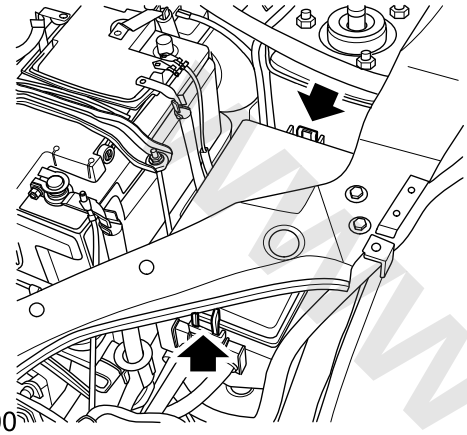

S8633000

3. Release 4 clips fixing the engine compartment fuse box to the lower cover of the fuse box, and lift the engine compartment fuse box.

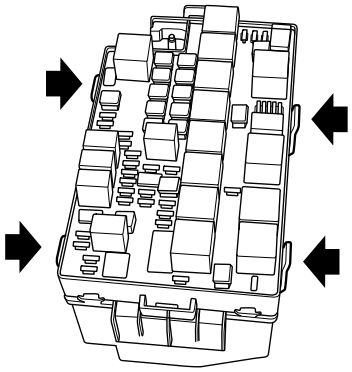

S8633001

4. Disconnect 5 harness connectors for vehicles without 7-speed dual clutch transmission or 6 harness connectors for vehicles with 7-speed dual clutch transmission from the back of the engine compartment fuse box, and remove the engine compartment fuse box.

Refit

1. Connect 5 (for models with non 7-speed dual clutch transmission) or 6 (for models with 7-speed dual clutch transmission) harness connectors to the back of engine compartment fuse box.
2. Secure the engine compartment fuse box to the fuse box lower cover with 4 clips.
3. Secure the fuse box upper cover to the engine compartment fuse box with 2 clips.
4. Connect the battery negative cable.

www.cargeek.ir

www.cargeek.ir

Battery Fuse Box

Remove

1. Disconnect the battery negative cable.
2. Remove the upper cover of the battery fuse box.
3. Remove the nut (1) fixing the battery fuse box to the positive battery.
4. Remove the nut (2) fixing the alternator cable to the battery fuse box and take away the cable.
5. Remove 3 nuts (3) fixing the body harness to the battery fuse box and take away the harness.

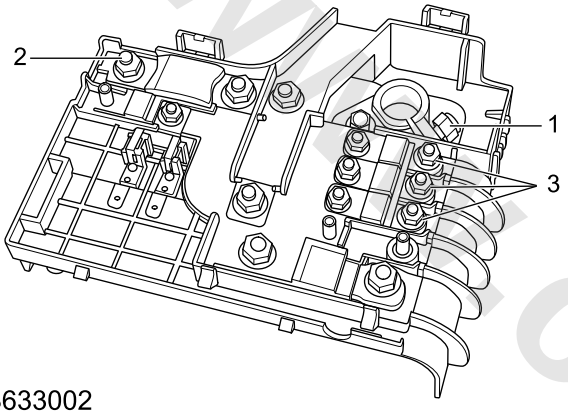

S8633002

6. Remove the battery fuse box.

Refit

1. Locate the battery fuse box to the battery.
2. Fix the body harness cable to the battery fuse box, fit 3 nuts, tighten to **3.5–5.5Nm** and check the torque.
3. Fix the alternator cable to the battery fuse box, fit 1 nut, tighten to **5–7Nm** and check the torque.
4. Fix the battery cable to the battery fuse box, fit 1 nut, tighten to **7–10Nm** and check the torque.
5. Fit the upper cover of the battery fuse box.
6. Connect the battery negative.

Body Harness

Remove

1. Disconnect the battery negative.
2. Remove the front bumper assembly.

Front Bumper Assembly Remove

3. Remove the air filter assembly.

Air Filter Assembly Remove

4. Remove the engine compartment fuse box.

Engine Compartment Fuse Box Remove

5. Remove the battery fuse box assembly.

Battery Fuse Box Remove

6. Disconnect the connector connecting the TCM and body harness.

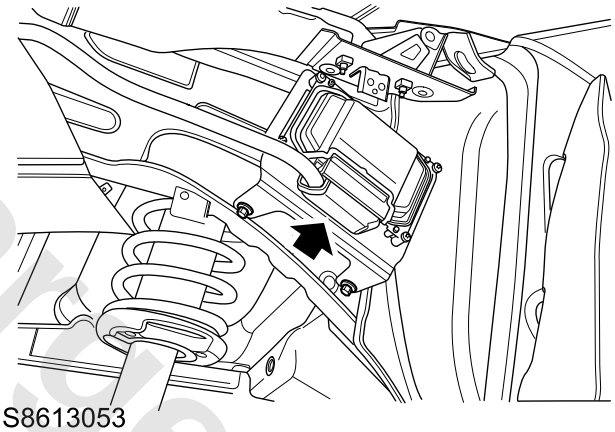

S8613053

7. Disconnect the connector of the **EBS**.

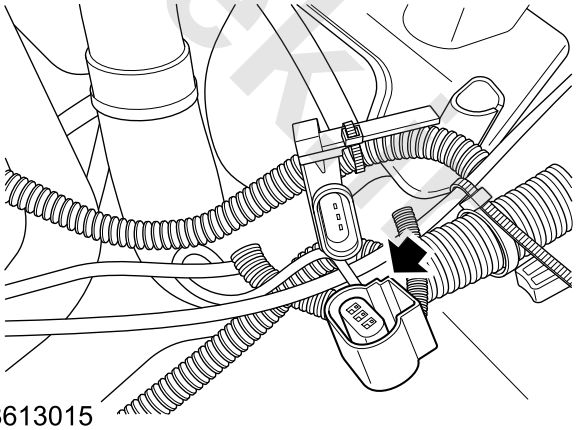

S8613015

8. Disconnect the connector of the front fog lamp (1) and daytime running lamp (2).

www.cargeek.ir

www.cargeek.ir

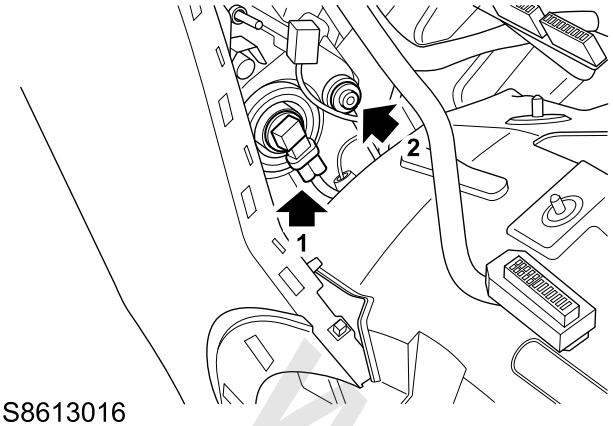

S8613016

9. Disconnect the connector of the horn.

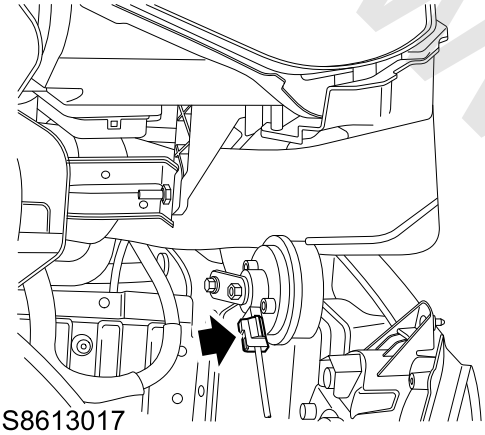
S8613017

10. Disconnect the connector of the headlamp washer motor, windshield washer motor and washer fluid level sensor.
11. Disconnect the connector of the cooling fan motor.
12. Disconnect the connector of the front impact sensor.

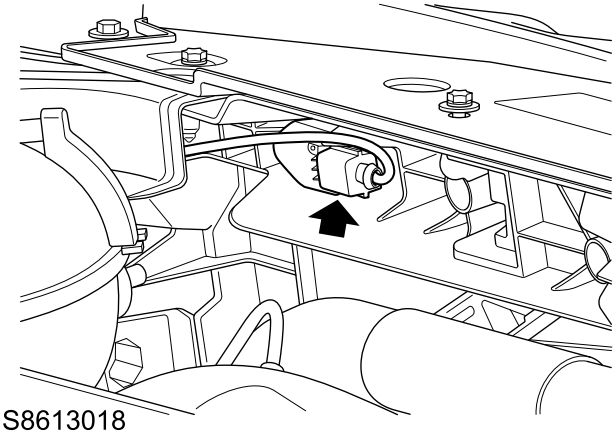
S8613018

13. Disconnect the connector of the engine compartment switch.
14. Disconnect the connector of the headlamp.

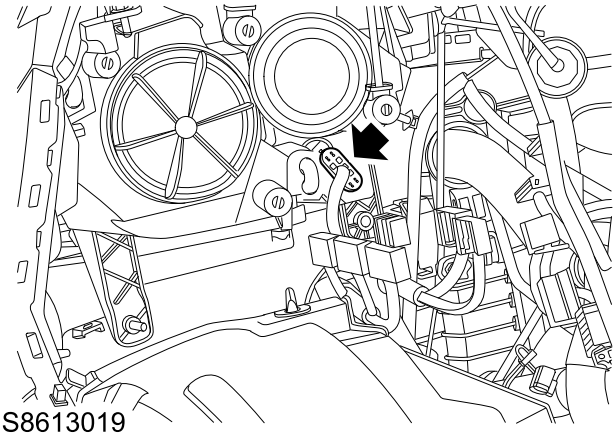
S8613019

15. Disconnect the connector of the ambient temperature sensor.

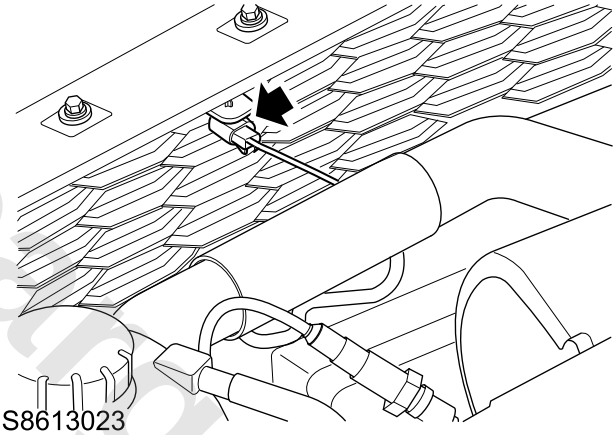
S8613023

16. Release the ground of the right headlamp.
17. Release the ground of the left front longitudinal beam.
18. Disconnect the connector connecting the **ECM** and body harness.
19. Release the **ECM** ground under the **ECM**.
20. Disconnect the connector of the engine harness.
21. Disconnect the connector of the windshield wiper motor.
22. Disconnect the level sensor connector of the wiper reservoir.
23. Disconnect the connector of the A/C pressure switch.

www.cargeek.ir

www.cargeek.ir

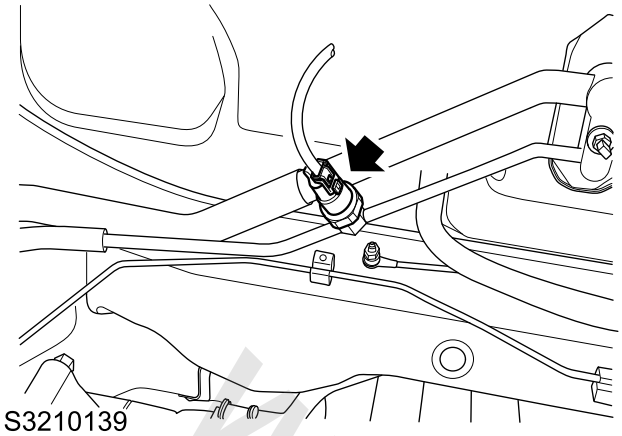
S3210139

24. Disconnect the connector of the **SCS ECU**.

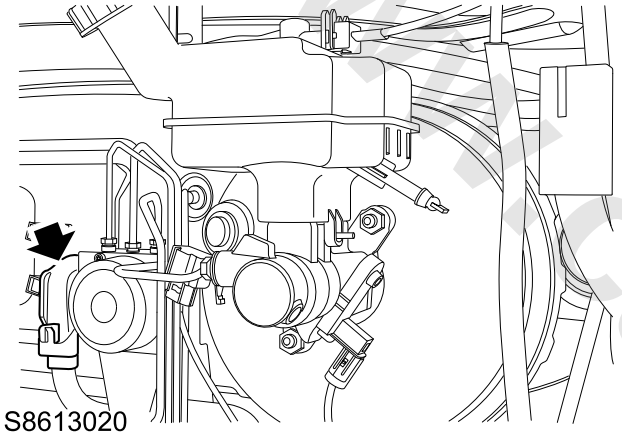
S8613020

25. Release the ground of the **SCS ECU**.
26. Disconnect the connector of the vacuum sensor.

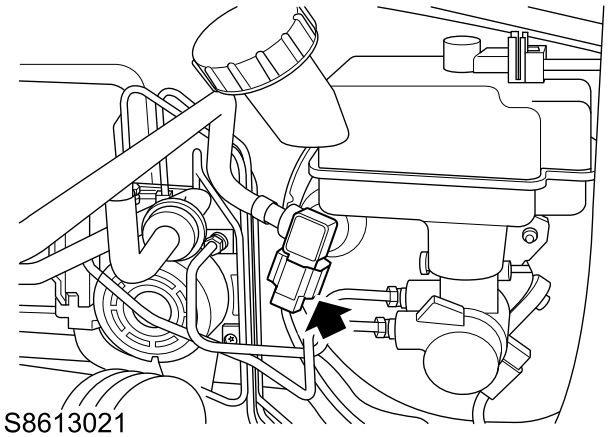
S8613021

27. Disconnect the brake lamp switch connector.

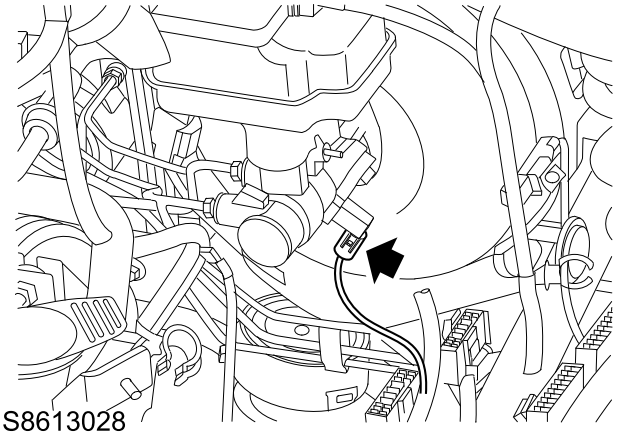
S8613028

28. Disconnect the connector of the brake fluid level switch.
29. Raise the vehicle to a suitable height for operation.

Warning: Do not work on or under a vehicle supported only by a jack. Always support the vehicle on safety stands.

30. Disconnect the connector of the height sensor on the front chassis.

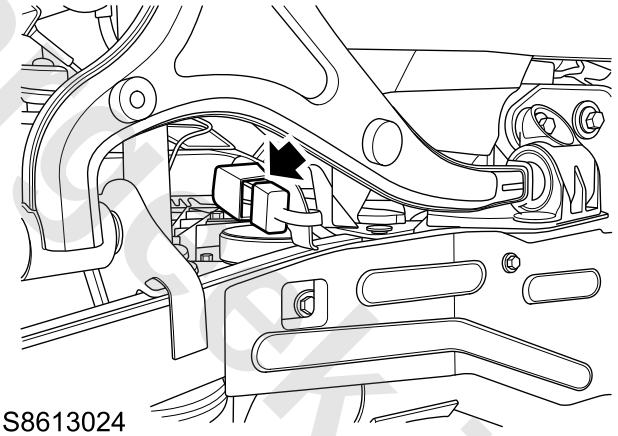
S8613024

31. Disconnect the connector of the front wheel speed sensor.
32. Disconnect the left/right connectors of the fuel tank harness.
33. Disconnect the connector (2) of the rear wheel speed sensor.
34. Disconnect the connector of the torque control.
35. Remove the rear wheel house liner.

Rear Wheel House Liner Remove

36. Disconnect the connector of the height sensor on the rear chassis.

www.cargeek.ir

www.cargeek.ir

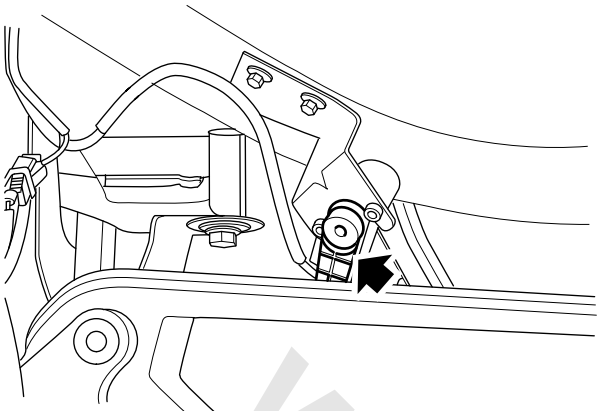

S8613025

37. Disconnect the connector (1) of the **EPB ECU**.
38. Release the ground under the **EPB**.
39. Lower the vehicle.
40. Remove the lower closure plate of the driver side instrument panel.

Driver Side Instrument Panel Lower Closure Plate Remove

41. Remove the glove box assembly.

Glove Box Assembly Remove

42. Remove the carpet.

Carpet Remove

43. Disconnect 5 connectors connecting the **BCM** and body harness.

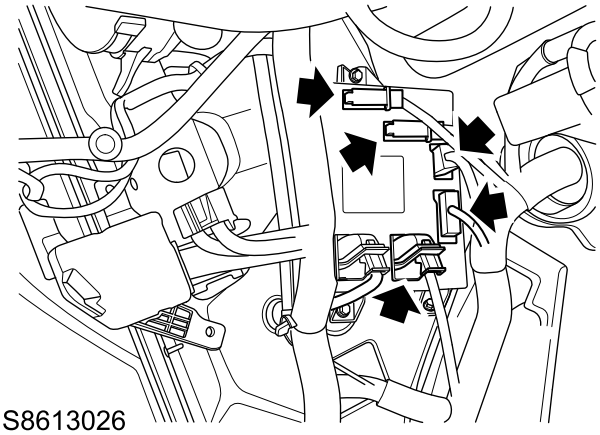

S8613026

44. Disconnect the connector of the brake pedal position sensor.

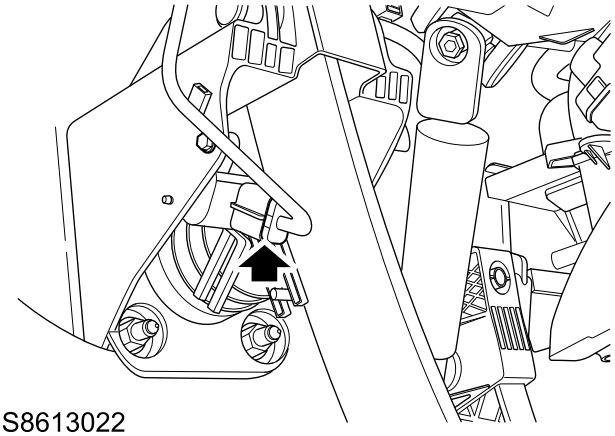

S8613022

45. Disconnect the connector of the accelerator pedal sensor.

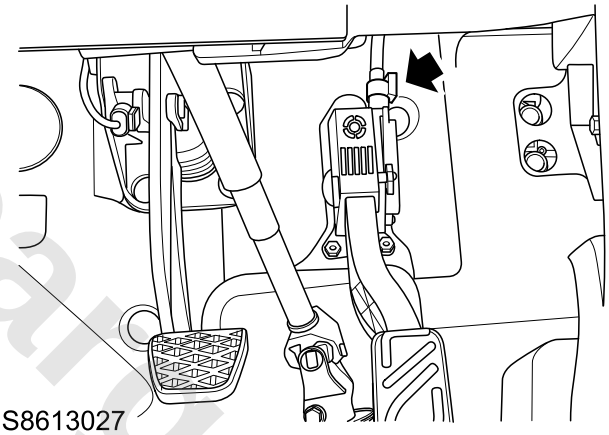

S8613027

46. Disconnect the connector connecting the **EPS** and **EPS ECU** to the body harness.
47. Release the ground of the **EPS**.
48. Disconnect 4 connectors of the PEPS.

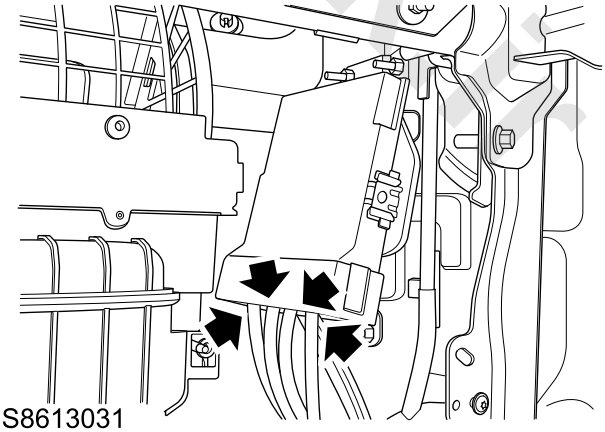

S8613031

49. Disconnect 2 connectors of the headlamp control module.

www.cargeek.ir

www.cargeek.ir

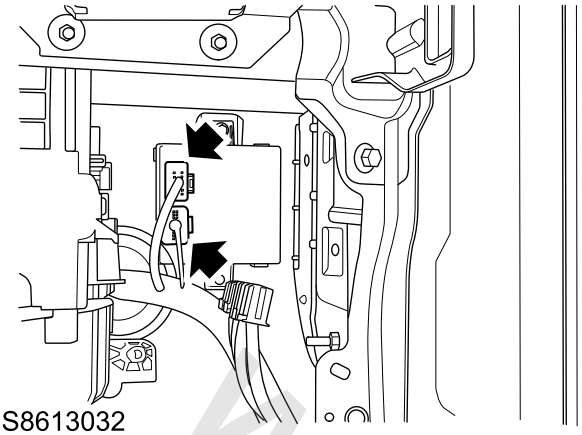

S8613032

50. Disconnect the connector between the body harness and the instrument panel harness from the A pillar.
51. Release the ground under the A pillar.
52. Disconnect the connector of the PMDC.
53. Disconnect the connector of the **TCCM**.
54. Disconnect the connector of the front door harness.
55. Remove the A pillar upper trim panel.

☞ **A Pillar Upper Trim Panel Remove**

56. Disconnect the connector of the A pillar tweeter.

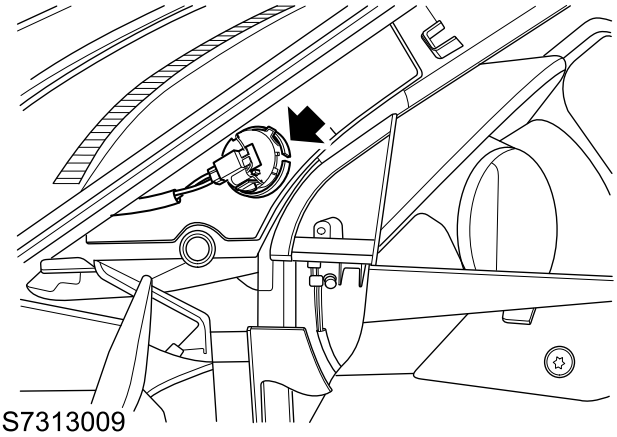

S7313009

57. Remove the roof interior.

☞ **Roof Interior Remove**

58. Disconnect the connector of the sunroof motor.

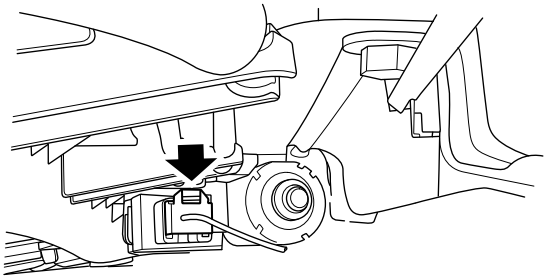

S8613030

59. Disconnect the connector of the side curtain airbag.

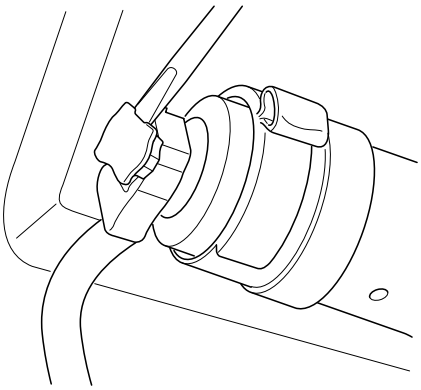

S920043

60. Disconnect the connector of the radio antenna
61. Disconnect the connector of the **GPS** antenna (If equipped).
62. Disconnect the central connector of the PEPS antenna.

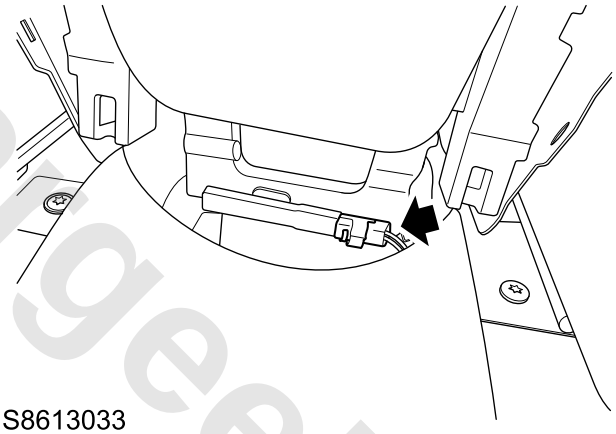

S8613033

63. Disconnect the connector of the shift controller.
64. Disconnect the airbag harness connector of the instrument panel harness.
65. Disconnect 2 connectors of the airbag control module.
66. Release two lower grounds of the airbag control module.
67. Disconnect the connector of side impact sensor.

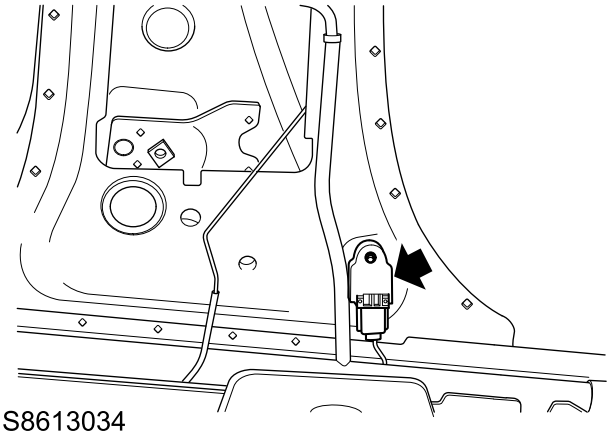

S8613034

www.cargeek.ir

www.cargeek.ir

68. Disconnect the connector of the seat belt pretensioner from the lower part of the B/C pillar.
69. Disconnect the connector of the rear door harness.
70. Remove the rear coat rack assembly.

Rear Coat Rack Remove

71. Disconnect the connector of the rear window heating element on the right/left D pillars.

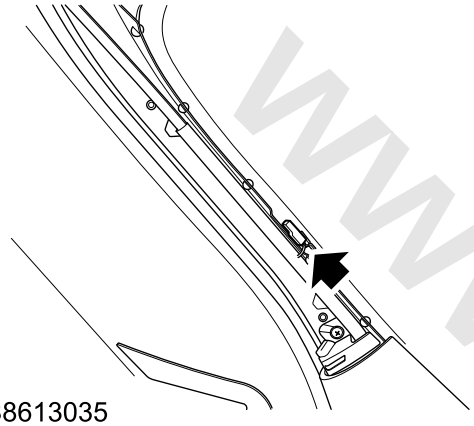

S8613035

72. Disconnect the connector of the high-mounted stop lamp.

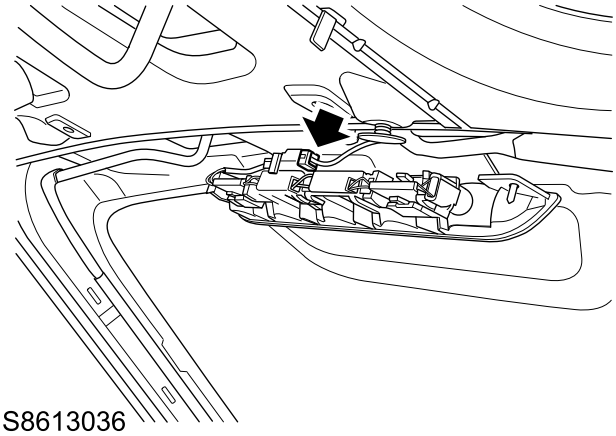

S8613036

73. Open the tail gate.
74. Remove the luggage compartment sill panel.

Luggage Compartment Sill Panel Remove

75. Remove the interior trim panel of the luggage compartment.

Luggage Compartment Interior Trim Panel Remove

76. Remove the tail gate trim panel.

Tail Gate Trim Panel Remove

77. Disconnect the connector of the rear window wiper motor.

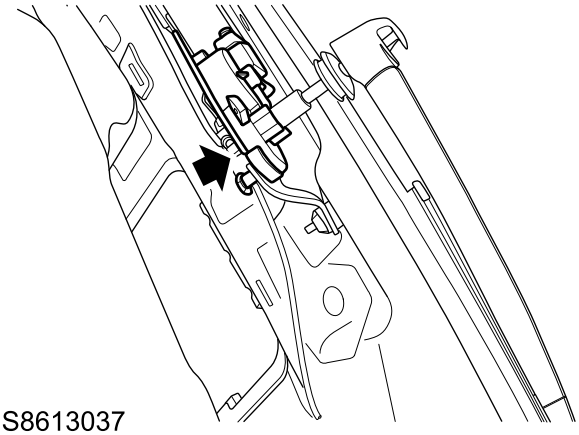

S8613037

78. Disconnect the connector of the **PDC ECU** on the left luggage compartment.

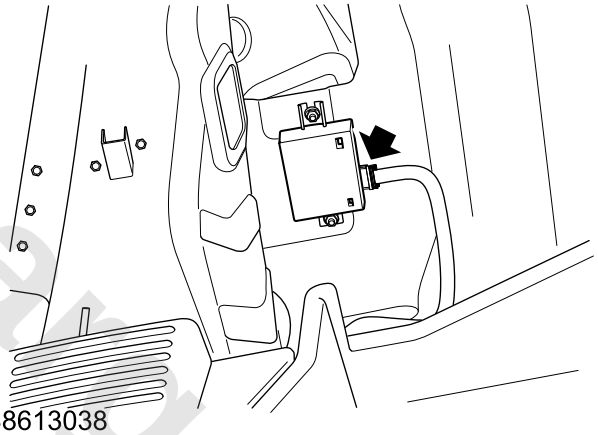

S8613038

79. Disconnect the connector of the rear AUX power socket.
80. Disconnect the connector of the tail lamp.

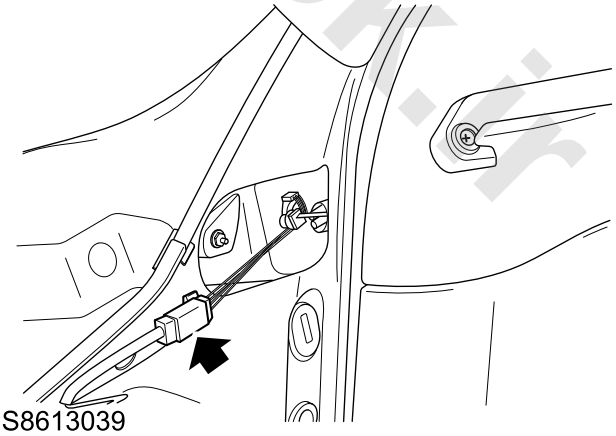

S8613039

81. Release the ground of the tail lamp.
82. Disconnect the connector of the left/right luggage compartment lamps.
83. Disconnect the connector of the four PDC sensors on the rear body.
84. Disconnect the connector of the rear fog lamp.
85. Remove the rear bumper assembly.

www.cargeek.ir

www.cargeek.ir

Rear Bumper Assembly Remove

86. Disconnect the connector of the PEPS (rear bumper skin).

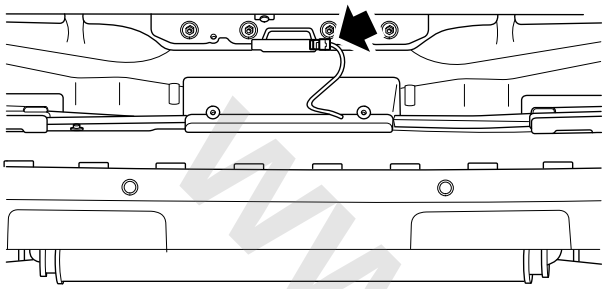

S8613041

87. Disconnect the connector of the tail gate switch (1) and motor (2).

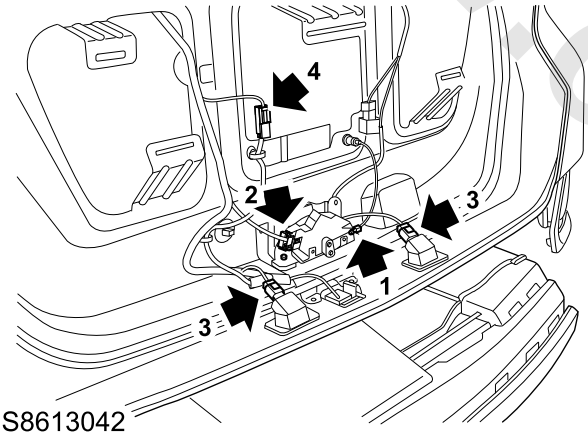

S8613042

88. Disconnect the connector (3) of the rear license lamp.
89. Disconnect the connector (4) of the rear camera (If equipped).
90. Release the harness clip and rubber grommet from the body.
91. Take away the body harness.

Refit

1. Locate the harness to the body, secure with clips and make sure all clips are secured in right position.
2. Connect the connector of the camera (If equipped).
3. Connect the connector of the rear license lamp.
4. Connect the connector of the tail gate switch and motor.
5. Connect the connector of the PEPS (rear bumper skin).
6. Fit the rear bumper assembly.

Rear Bumper Assembly Refit

7. Connect the connector of the rear fog lamp.
8. Connect the connector of the four PDC sensors on the rear body.
9. Connect the connector of the left/right luggage compartment lamps.
10. Fit the ground of the tail gate.
11. Connect the connector of the tail lamp.
12. Connect the connector of the rear AUX power socket.
13. Connect the connector of the **PDC ECU** on the left luggage compartment.
14. Connect the connector of the rear window wiper motor.
15. Fit the trim panel of the tail gate.

Tail Gate Trim Panel Refit

16. Fit the interior trim panel of the luggage compartment.

Luggage Compartment Interior Trim Panel Refit

17. Fit the sill panel of the luggage compartment.

Luggage Compartment Sill Panel Refit

18. Close the tail gate.
19. Connect the connector of the high-mounted stop lamp.
20. Connect the connector of the rear window heating element on the right/left D pillars.
21. Fit the rear coat rack assembly.

Rear Coat Rack Assembly Refit

22. Connect the connector of the rear door harness.
23. Connect the connector of the seat belt pretensioner under the B/C pillar.
24. Connect the connector of the side impact sensor.
25. Fit two lower grounds of the airbag control module.
26. Connect 2 connectors of the airbag control module.
27. Connect the airbag harness connector of the instrument panel harness.
28. Connect the connector of the shift controller.
29. Connect the central connector of the PEPS antenna.
30. Connect the connector of the **GPS** antenna (If equipped).
31. Connect the connector of the radio antenna
32. Connect the connector of the side curtain airbag.
33. Connect the connector of the sunroof motor.
34. Fit the roof interior.

Roof Interior Refit

35. Connect the connector of the A pillar tweeter.
36. Fit the A pillar upper trim panel.

A Pillar Upper Trim Panel Refit

37. Connect the connector of the front door harness.
38. Connect the connector of the **TCCM**.

www.cargeek.ir

www.cargeek.ir

39. Connect the connector of the PMDC.
40. Fit the ground under the A pillar.
41. Connect the connector between the A pillar body harness and the instrument panel harness.
42. Connect 2 connectors of the headlamp control module.
43. Connect 4 connectors of the PEPS.
44. Fit the ground under the **EPS**.
45. Fit the connector connecting the **EPS** and **EPS ECU** to the body.
46. Connect the connector of the accelerator pedal sensor.
47. Connect the connector of the brake pedal position sensor.
48. Connect 5 connectors of the **BCM** and body harness.
49. Fit the carpet.

Carpet Refit

50. Fit the glove box assembly.

Glove Box Assembly Refit

51. Fit the lower closure plate of the driver side instrument panel.

Driver Side Instrument Panel Lower Closure Plate Refit

52. Raise the vehicle to a suitable height for operation.

Warning: Do not work on or under a vehicle supported only by a jack. Always support the vehicle on safety stands.

53. Fit the ground under the **EPB**.
54. Connect the connector of the **EPB ECU**.
55. Connect the connector of the rear height sensor.
56. Fit the rear wheel house liner.

Rear Wheel House Liner Refit

57. Connect the connector of the torque coupler.
58. Connect the connector of the rear wheel speed sensor.
59. Connect the left/right connectors of the fuel tank harness.
60. Connect the connector of the front wheel speed sensor.
61. Connect the connector of the front height sensor.
62. Lower the vehicle.
63. Connect the connector of the brake fluid level switch.
64. Connect the connector of the brake lamp switch.
65. Connect the connector of the vacuum sensor.
66. Fit the ground under the **SCS ECU**.
67. Connect the connector of the **SCS ECU**.
68. Connect the connector of the A/C pressure switch.
69. Connect the level sensor connector of the wiper reservoir.
70. Connect the connector of the windshield wiper motor.
71. Connect the connector of the engine harness.
72. Fit the **ECM** ground under the **ECM**.
73. Connect the connector connecting the **ECM** and body harness.
74. Fit the ground of the left front longitudinal beam.
75. Fit the ground of the right headlamp.
76. Connect the connector of the ambient temperature sensor.
77. Connect the connector of the headlamp.
78. Connect the connector of the engine cover touch switch.
79. Connect the connector of the front impact sensor.
80. Connect the connector of the cooling fan motor.
81. Connect the connector of the headlamp washer motor, windshield washer motor and washer fluid level sensor.
82. Connect the connector of the horn.
83. Connect the connector of the front fog lamp and daytime running lamp.
84. Connect the connector of the **EBS**.
85. Fit the connector connecting the TCM and body harness.
86. Fit the battery fuse box assembly.

Battery Fuse Box Refit

87. Fit the engine compartment fuse box.

Engine Compartment Fuse Box Refit

88. Fit the air filter assembly.

Air Filter Assembly Refit

89. Fit the front bumper assembly.

Front Bumper Assembly Refit

90. Connect the battery negative.

www.cargeek.ir

www.cargeek.ir

Instrument Panel Harness

Remove

1. Disconnect the battery negative.
2. Remove the instrument panel assembly.

☞ **Instrument Panel Assembly Remove**

3. Disconnect the connector of the passenger compartment fuse box.
4. Disconnect the connector between the **BCM** and the instrument panel harness.

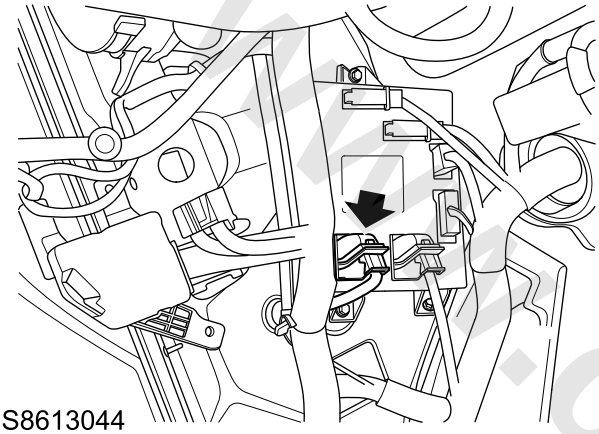

S8613044

5. Disconnect 2 connectors of the GW.

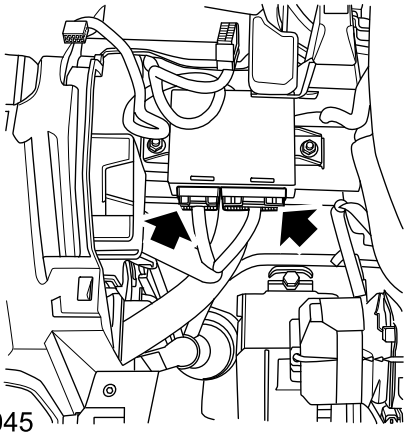

S8613045

6. Disconnect the connector of the direction indicator lamp/high beam lever switch, cruise control lever switch and angle sensor.

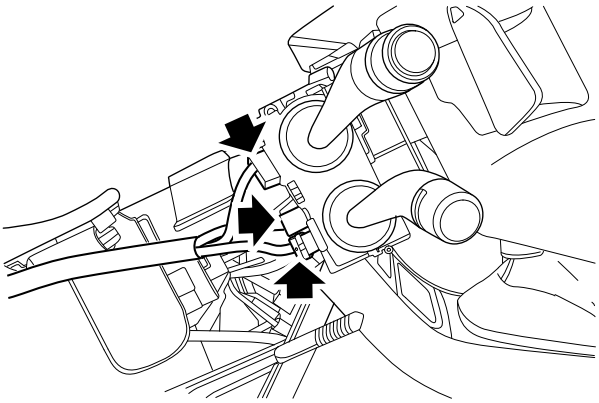

S8613046

7. Disconnect the connector of the wiper/washer lever switch and clock spring.

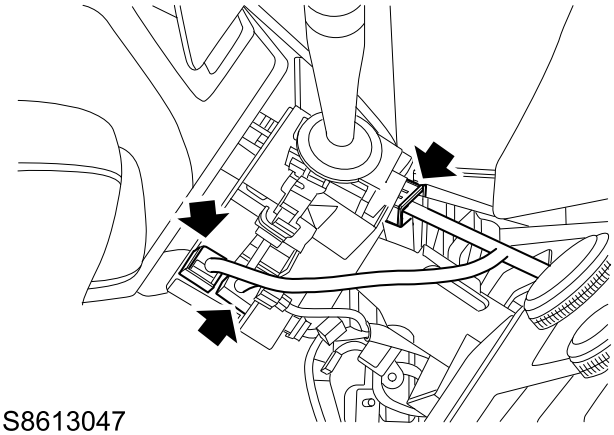

S8613047

8. Disconnect the blower motor connector.

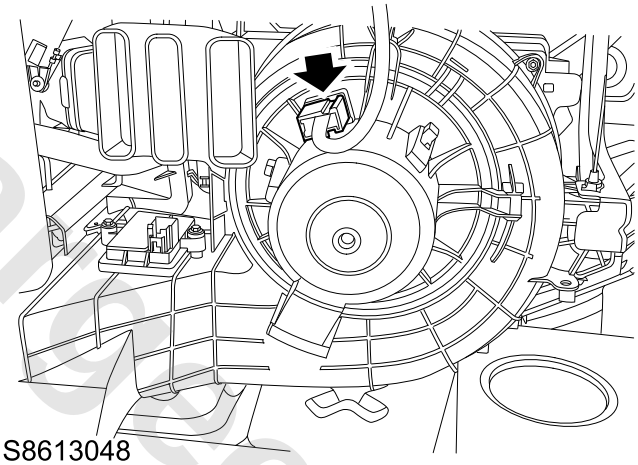

S8613048

9. Disconnect the servo motor connector of the recirculated air damper.
10. Disconnect the connector of the face air outlet temperature sensor.
11. Disconnect the connector of the blower speed regulation module.

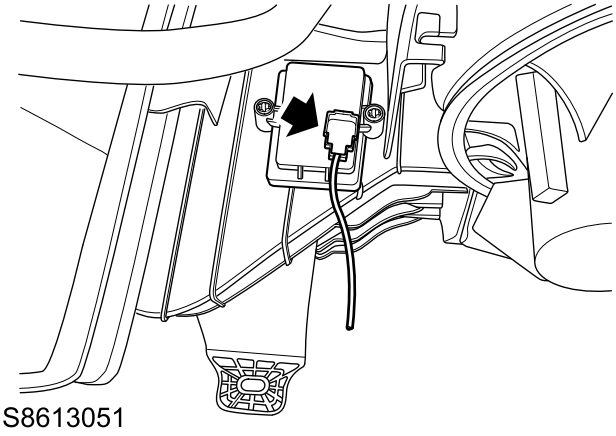

S8613051

12. Disconnect the connector of the evaporator temperature sensor.

www.cargeek.ir

www.cargeek.ir

13. Disconnect the servo motor connector of the mode damper.

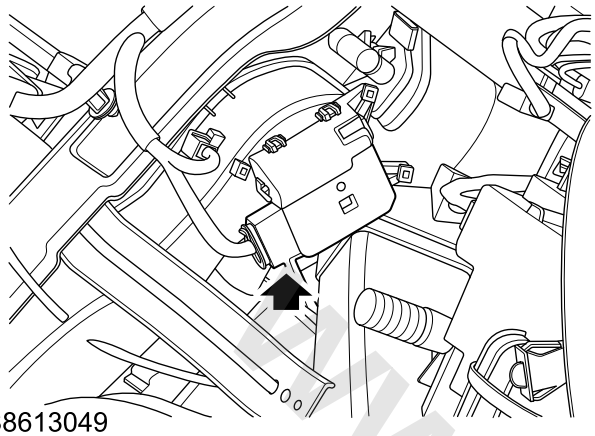

S8613049

14. Disconnect the harness connector of the body airbag.
15. Disconnect the front connector of the PEPS antenna.

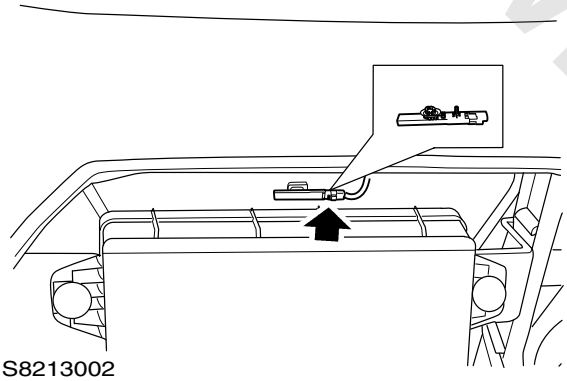

S8213002

16. Disconnect the servo motor connector of the blend damper.

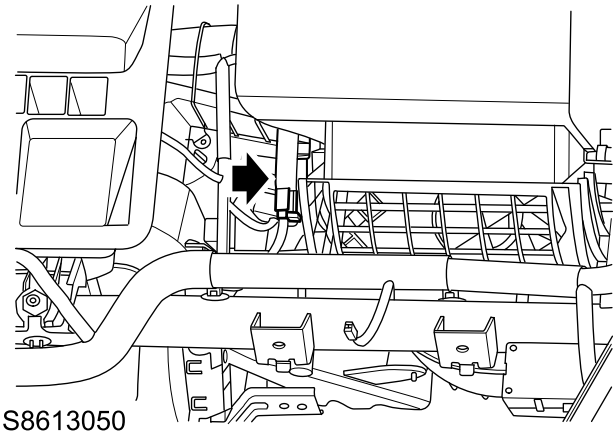

S8613050

17. Disconnect the connector of the footwell air outlet temperature sensor.
18. Disconnect the connector of the passenger side airbag.
19. Disconnect the connector of the communication module assembly.

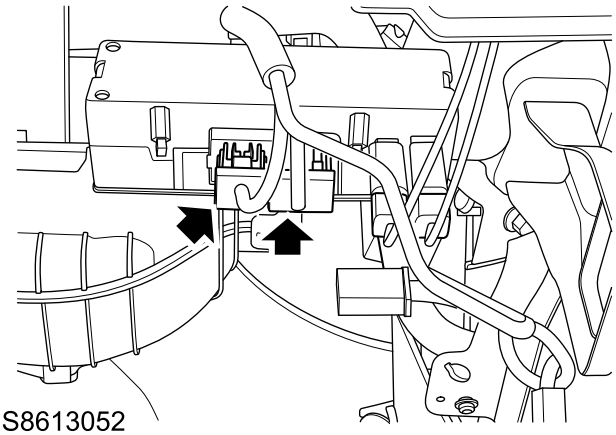

S8613052

20. Disconnect 3 connectors of the body harness.
21. Release the ground.
22. Release the clip fixing the harness to the instrument panel beam.
23. Remove the harness of the instrument panel.

Refit

1. Fix the instrument panel harness to the instrument panel beam and secure with clips.
2. Fit the ground.
3. Connect 3 connectors of the body harness.
4. Connect the connector of the communication module assembly.
5. Connect the connector of passenger side airbag.
6. Connect the connector of the footwell air outlet temperature sensor.
7. Connect the servo motor connector of the blend damper.
8. Connect the front connector of the PEPS antenna.
9. Connect 2 connectors of the ATC ECU.
10. Connect the harness connector of the body airbag.
11. Connect the servo motor connector of the mode damper.
12. Connect the connector of the evaporator temperature sensor.
13. Connect the connector of the blower speed regulation module.
14. Connect the connector of the face air outlet temperature sensor.
15. Connect the servo motor connector of the circulation damper.
16. Connect the connector of the blower motor.
17. Connect the connector of the wiper/washer lever switch and clock spring.
18. Connect the connector of the direction indicator lamp/high beam lever switch, cruise control lever switch

www.cargeek.ir

www.cargeek.ir

and angle sensor.

19. Connect 2 connectors of the GW.
20. Connect the connector between the **BCM** and the instrument panel harness.
21. Connect the connector of the passenger compartment fuse box.
22. Fit the instrument panel assembly.

Instrument Panel Assembly Refit

23. Connect the battery negative.

Driver Door Harness

Remove

1. Disconnect the battery negative.
2. Remove the left front door assembly.

Front Door Assembly Remove

3. Remove the left front door waterproof membrane.

Front Door Waterproof Membrane Remove

4. Remove the left front door woofer.

Front Door Woofer Remove

5. Disconnect the connector of the exterior rearview mirror.

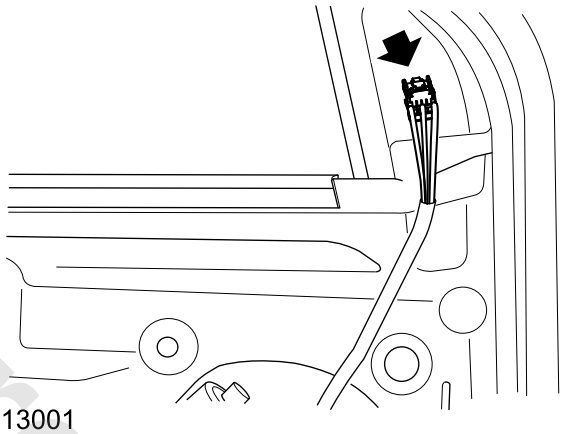

S8613001

6. Disconnect the connector of the window regulator motor.

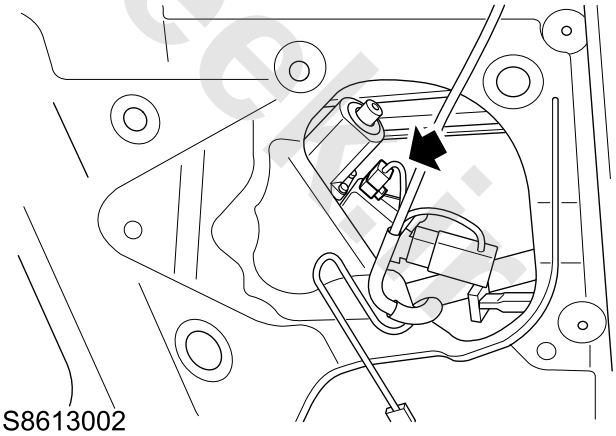

S8613002

7. Disconnect the connector of the door handle antenna HSU and glass regulator switch.

www.cargeek.ir

www.cargeek.ir

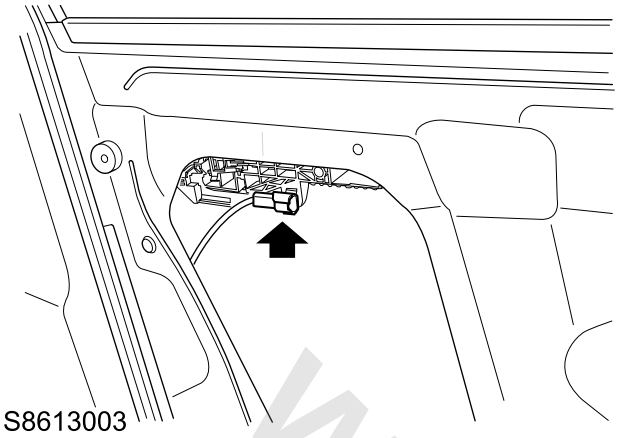
S8613003

8. Disconnect the connector of the **CDL** motor.

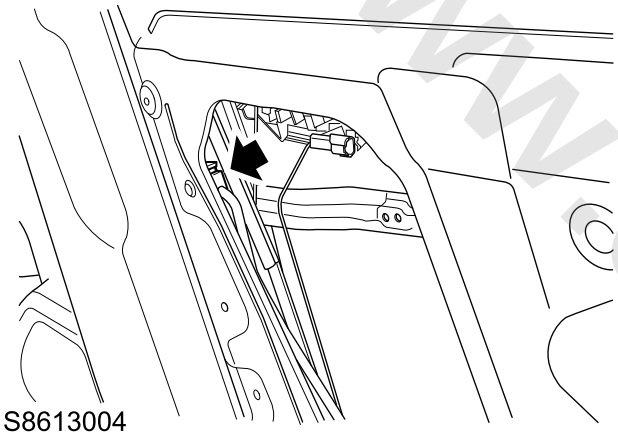
S8613004

9. Release the clip fixing the harness to the door.
10. Remove the harness of the driver door.

Refit

1. Locate the harness to the door and fix it with clips.
2. Connect the connector of the **CDL** motor.
3. Connect the connector of the door handle antenna HSU and glass regulator switch.
4. Connect the connector of the window regulator motor.
5. Connect the connector of the exterior rearview mirror.
6. Fit the left front door woofer.

Front Door Woofer Refit

7. Fit the left front door waterproof membrane.

Front Door Waterproof Membrane Refit

8. Fit the left front door assembly.

Front Door Assembly Refit

9. Connect the battery negative cable.

Front Passenger Door Harness

Remove

1. Disconnect the battery negative.
2. Remove the right front door assembly.

Front Door Assembly Remove

3. Remove the right front door waterproof membrane.

Front Door Waterproof Membrane Remove

4. Remove the right front door woofer.

Front Door Woofer Remove

5. Disconnect the connector of the exterior rearview mirror.

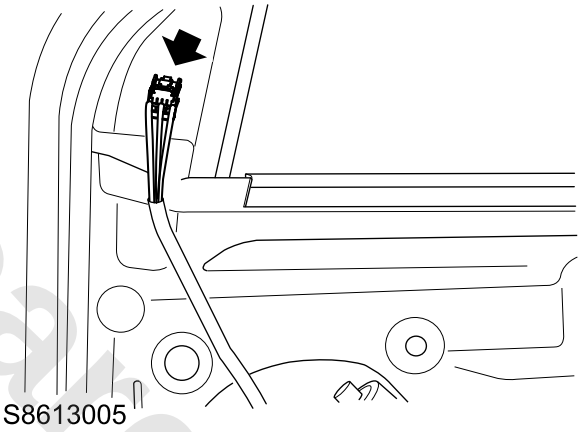
S8613005

6. Disconnect the connector of the window regulator motor.

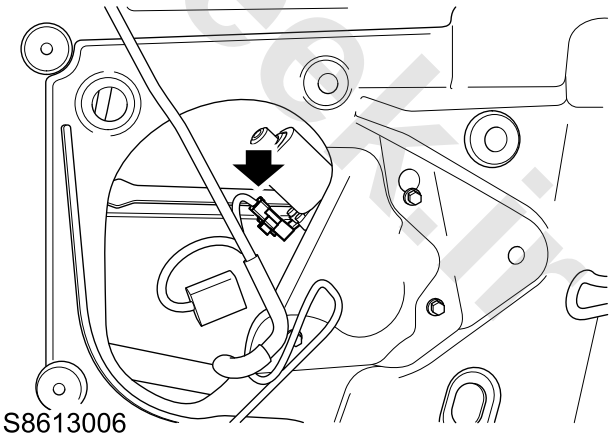
S8613006

7. Disconnect the connector of the door handle antenna HSU and glass regulator switch.

www.cargeek.ir

www.cargeek.ir

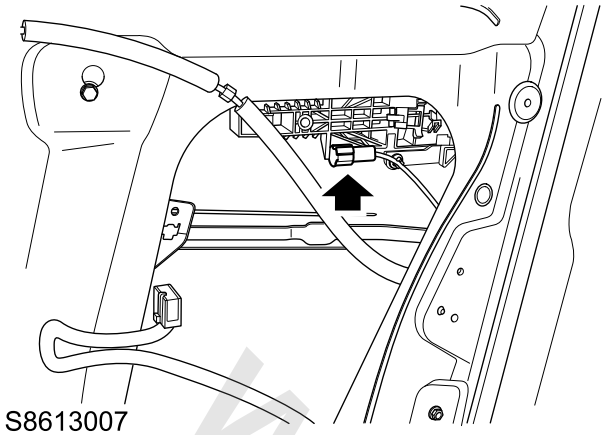
S8613007

8. Disconnect the connector of the **CDL** motor.

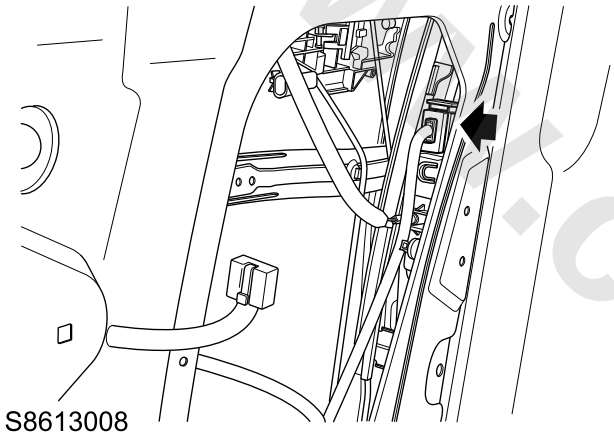
S8613008

9. Release the clip fixing the harness to the door.
10. Remove the harness of the front passenger door.

Refit

1. Locate the harness to the door and fix it with clips.
2. Connect the connector of the **CDL** motor.
3. Connect the connector of the door handle antenna HSU and glass regulator switch.
4. Connect the connector of the window regulator motor.
5. Connect the connector of the exterior rearview mirror.
6. Fit the right front door woofer.

Front Door Woofer Refit

7. Fit the right front door waterproof membrane.

Front Door Waterproof Membrane Refit

8. Fit the right front door assembly.

Front Door Assembly Refit

9. Connect the battery negative cable.

Rear Door Harness

Remove

1. Disconnect the battery negative.
2. Remove the rear door assembly.

Rear Door Assembly Remove

3. Remove the rear door waterproof membrane.

Rear Door Waterproof Membrane Remove

4. Remove the rear door woofer.

Rear Door Woofer Remove

5. Remove the rear door tweeter.

Rear Door Tweeter Remove

6. Disconnect the connector of the window regulator motor.

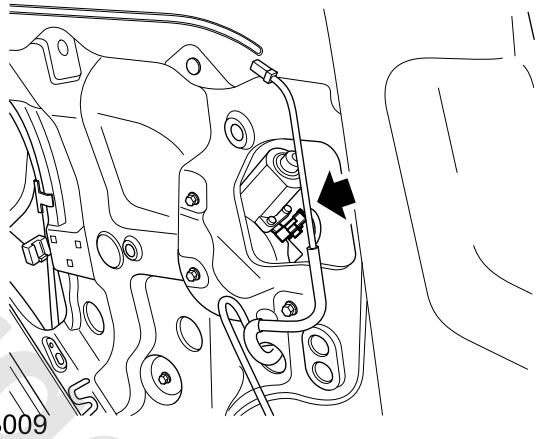
S8613009

7. Disconnect the connector of the rear door **CDL** motor.

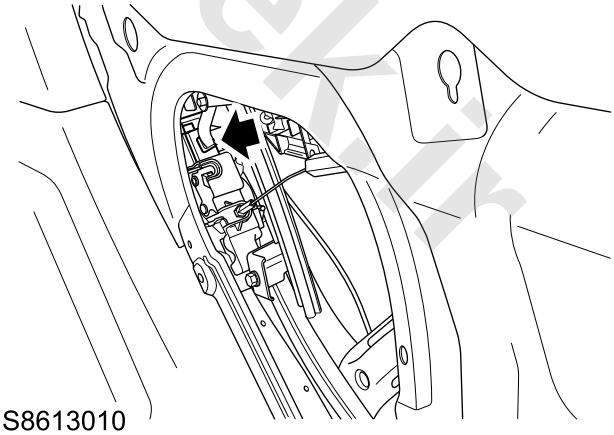
S8613010

8. Disconnect the connector of the rear window regulator switch.
9. Disconnect the connector of the body harness.
10. Release the clip fixing the harness to the door.
11. Remove the rear door harness.

Refit

1. Locate the harness to the door and fix it with clips.
2. Connect the connector of the body harness.

www.cargeek.ir

www.cargeek.ir

3. Connect the connector of the rear window regulator switch.
4. Connect the connector of the **CDL** motor.
5. Connect the connector of the window regulator motor.
6. Fit the rear door tweeter.

Rear Door Tweeter Refit

7. Fit the rear door woofer.

Rear Door Woofer Refit

8. Fit the rear door waterproof membrane.

Rear Door Waterproof Membrane Refit

9. Fit the rear door assembly.

Rear Door Assembly Refit

10. Connect the battery negative cable.

Center Console Harness

Remove

1. Disconnect the battery negative.
2. Remove the center console assembly.

Center Console Assembly Remove

3. Disconnect the connector from low frequency anti-theft coil.

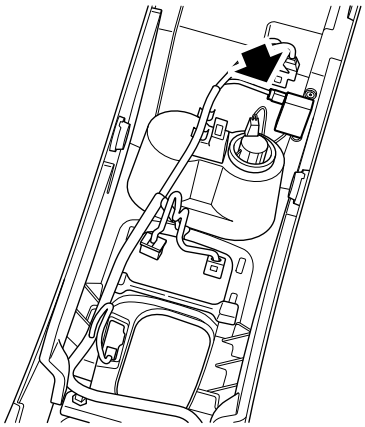

S8613011

4. Release the clip securing the harness to the center console.
5. Take away the center console harness.

Refit

1. Locate the center console harness to the center console and secure with clips.
2. Connect the connector of low frequency anti-theft coil.
3. Refit the centre console assembly.

Refit of Centre Console Assembly

4. Connect the battery negative cable.

www.cargeek.ir

www.cargeek.ir

Driver Power Seat Harness

Remove

1. Disconnect the battery negative.
2. Disconnect the combination switch connector of the driver power seat.
3. Disconnect the connector of the seat height regulator motor.

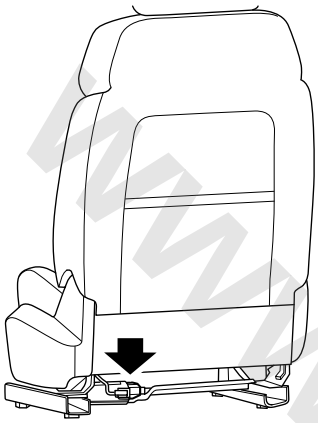

S8613012

4. Disconnect the connector of the seat forward/backward regulator motor.

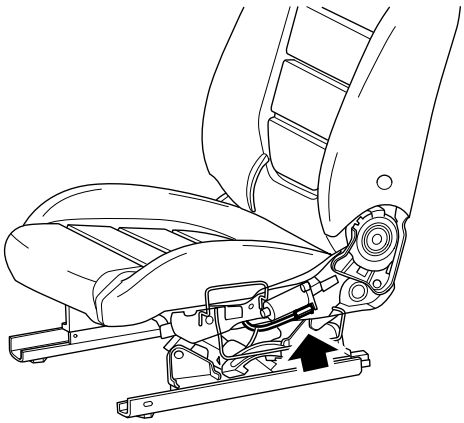

S8613013

5. Disconnect the connector of the seat back regulator motor.

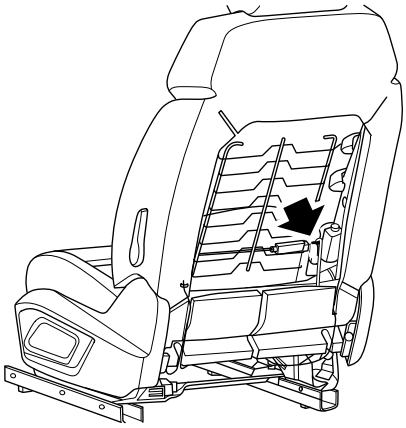

S8613014

6. Disconnect the connector of the body harness.
7. Release the clip fixing the harness to the seat.
8. Take away the seat harness.

Refit

1. Locate the harness to the seat and secure with clips.
2. Connect the connector of body harness.
3. Connect the connector of seat backrest regulating motor.
4. Connect the connector of the seat level regulating motor.
5. Connect the connector of seat vertical regulating motor.
6. Connect the connector of driver motor seat combination switch.
7. Connect the battery negative.

www.cargeek.ir

www.cargeek.ir

Front Power Socket

Remove

1. Disconnect the battery negative cable.
2. Remove the mouldings on both sides of upper centre console entertainment panel.
3. Remove 4 screws fixing the center console front storage compartment to the center console body.
4. Disconnect the harness connector at the back of front power socket.
5. Release 2 retaining clips, remove the front power socket from the front end of centre console front storage compartment.

Refit

1. Insert the cigarette lighter socket from the front end of centre console front storage compartment and secure it with clips.
2. Connect the harness connector at the back of cigarette lighter.
3. Fit the centre console front storage compartment to the centre console body, fit 4 screws and tighten to **1.6–2.0Nm**.
4. Refit the mouldings on both sides of upper centre console entertainment panel.
5. Connect the battery negative cable.

www.cargeek.ir

www.cargeek.ir

www.cargeek.ir

Glass Regulator/Sunroof Initialization

Glass Regulator Initialization

For glass regulators with "one-button control" and "anti-pinch" functions, when the battery is disconnected, these functions will be disabled; when the battery is connected, these functions can be resumed by initialization of the regulator. After the power is connected again, if the regulator is not initialized, the information center of the instrument will display warning icon and information "Please Initialize Driver Window" to remind you to initialize the regulator. Continually press the switch to ascend the window to the top, then press and hold the switch for 5s to resume the "one-button control" and "anti-pinch" functions of the window.

Sunroof Initialization

If the sunroof is operated manually (not at zero position), the sunroof shall be initialized. Specific steps are as follows:

1. Press the TILT button on the sunroof switch to lift the sunroof.
2. Press the TILT button again and hold for 8s to further lift the sunroof glass, and it will stop after returning to the lift position, then the button can be released.

Perform the above 2 steps to finish sunroof initialization.

www.cargeek.ir

www.cargeek.ir

www.cargeek.ir

Operation after Battery Disconnection

When the battery is reconnected after disconnection, operating the following operations to resume some functions of the vehicle.

Glass Regulator Initialization

When the battery is reconnected after disconnection, the IPK will display and "Please Initialize Driver Window" for the driver, when this message occurs, please initialize the window.

Self-learning and Adjustment, Programming and Coding - Window Regulator Initialization

EPB Recovery

When the battery is resumed after it runs out or is disconnected, The EPB MIL on the IPK will illuminate, and the EPB cannot be enabled or disabled properly.

In this case, depress the brake pedal, press the EPB switch and then pull it up, repeat this process until the EPB MIL is disabled and the EPB resumes.

EPS Module Angle Initialization

When the battery is reconnected after disconnection, the EPS/SAS warning lamps become yellow. After initialization, the warning lamp goes out.

Self-learning and Adjustment, Programming and Coding - EPS Module Angle Initialization

Stop/Start Recovery

For vehicles with the intelligent stop/start energy saving system, after the battery negative terminal is reconnected, the battery shall be stationary for at least 4 hours, and the automatic start/stop function of the engine cannot be used before this operation.

www.cargeek.ir

www.cargeek.ir

www.cargeek.ir

ECM

Mixture Self-learning

For vehicles with intelligent stop/start function, the vehicle will lose the intelligent stop/start function when the following conditions occur. The function shall be resumed by mixture self-learning.

1. The power of the **ECM** resumes after disconnection, including disconnection of battery and **ECM** connector, etc.
2. Software and calibration of the **ECM** are updated by **SIPS**.
3. After **ECM** DTC is cleared by the **VDS**.

The following procedures are recommended for mixture self-learning of the engine: Keep the engine idle for about 3-5min, then depress and hold the accelerator pedal so that the vehicle can drive at a constant speed of 30-70km/h for 20min.

Caution: *Do not use cruise function to stabilize the vehicle speed when performing self-learning for the intelligent stop/start energy saving system.*

Use the **VDS** to read the "Fuel Mixture Self-learning Request" parameter on the real-time display. When the icon shifts from "ON" to "OFF", the mixture self-learning is completed. After the operation, please confirm the effect of the self-learning by performing 3 auto stops.

ECM Replacement

After replacement of the **ECM**, perform the following operations:

1. Connect the scan tool to the vehicle and access the **SIPS**.
2. Select "Programming and Coding — **ECM** —Replacement", and operate as per the instructions on the screen.

   The procedures for replacement already include procedures for update, configuration and anti-theft data matching. If the operation fails during replacement, please operate as per the instructions on the screen.
3. Perform self-learning for the electronic throttle.

   ☞**Electronic Throttle Self-learning**
4. Perform mixture self-learning for vehicles with intelligent stop/start function.
5. Place the ignition switch in ON, and use **VDS** to perform "**ECM** Adaption Reset".
6. Wait for 2-5 seconds, and turn off the ignition switch, then re-start the vehicle.

www.cargeek.ir

www.cargeek.ir

TCM

Reset EEPROM Data to Default Value

The **EEPROM** is part of the **TCM** memory, the data stored in the EEPROM will not change when the software and calibration is updated. After the diagnostic procedure is completed, restore the **EEPROM** data to a reasonable range so as to avoid wrong data is used by the **TCM** software.

After replacement of the following parts, perform the diagnostic procedures for resetting the **EEPROM** data to default value:

- Transmission
- **TCM**

When performing the diagnostic procedure, the following conditions must be met:

1. The ignition switch is in "ON" position.
2. Turn off the engine.
3. Can't reset the EEPROM to default value after clutch engagement point self-learning.

After operation successful, must let the vehicle power down normally(must not disconnect battery).

Perform this diagnostic procedure, the operation shall be held for about 3s.

1. Connect the scan tool to the vehicle and access the **VDS**.
2. Select "Fast Track - Learn Value/Adjustment - Reset **EEPROM** Data to Default Value", and operate as per the instructions on the screen.

Caution: *The operation shall be done before the "SubROM data" is read.*

Shift Fork Position Self-learning

Shift fork position self-learning will store the correct position information of the shift fork to the **TCM**.

After replacement of the following parts, perform the diagnostic procedures for shift fork position self-learning

- Transmission
- **TCM**

When performing the self-learning, the following conditions must be met:

1. The engine is working for more than 5min.
2. The vehicle is in P gear and the vehicle speed is 0.
3. **TCM** has no identified **DTC**

After operation successful, must let the vehicle power down normally(must not disconnect battery).

The self-learning shall last for about 1min. During the operation, forced actions of the shift fork will cause vehicle vibration. This is a normal situation.

1. Connect the scan tool to the vehicle and access the **VDS**.
2. Select "Fast Track - Learn Value/Adjustment - AT Self-learning - Shift Fork Position Self-learning", and operate as per the instructions on the screen.

After self-learning, drive for a while to check the effect of the self-learning. If the vehicle performance is lowered, repeat the self-learning.

Clutch Engagement Point Self-learning

Clutch engagement point self-learning will store the correct engagement point information of the odd/even clutch to the **TCM**.

Perform the diagnostic procedures for clutch engagement point self-learning under the following conditions:

When a part is replaced:

- Transmission
- **TCM**

Poor Vehicle Performance:

- Severe impact occurs during vehicle start.
- Severe impact occurs during vehicle shifting.
- The respond is too long.

When performing the diagnostic procedure, the following conditions must be met:

1. The engine is working for more than 5min.
2. The vehicle is in P gear and the vehicle speed is 0.
3. **TCM** has no identified **DTC**
4. The A/C is always ON/OFF (do not shift between ON/OFF).
5. Clutch Temperature: 45–70°C.
6. Engine coolant temperature: 90–140°C.
7. Outside Temperature: 5–35°C
8. Do not depress the accelerator pedal.
9. Clutch speed (when engine idles) is less than 1200rpm.
10. Is engine torque stable:Yes.

After operation successful, must let the vehicle power down normally(must not disconnect battery).

The self-learning shall last for about 1min, during the operation, the forced actions of the clutch will cause vehicle vibration, this is a normal situation.

1. Connect the scan tool to the vehicle and access the **VDS**.

www.cargeek.ir

www.cargeek.ir

2. Select "Fast Track - Learn Value/Adjustment - AT Self-learning - Clutch Meshing Point Self-learning", and operate as per the instructions on the screen.

Caution: *During clutch meshing point self-learning, to ensure a stable engine torque output, do not shift the A/C between ON/OFF state.*

After self-learning, drive for a while to check the effect of the self-learning. If the vehicle performance is lowered, repeat the self-learning.

Clutch Pressure/Current Curve Self-learning

Correct pressure/current curve value of the odd/even clutch can be stored to the **TCM** by self-learning of the clutch pressure/current curve.

After replacement of the following parts, perform the diagnostic procedures for clutch pressure/current curve self-learning:

- Pressure sensor

When performing the self-learning, following conditions must be met:

1. The engine is working for more than 5min.
2. The vehicle is in P gear and the vehicle speed is 0.
3. **TCM** has no identified **DTC**.
4. The A/C is always ON/OFF (do not shift between ON/OFF).
5. Valvebody temperature: 35–50℃.
6. Do not depress the accelerator pedal.
7. Clutch speed (when engine idles) is less than 1200rpm.
8. Is engine torque stable: Yes.

The self-learning shall last for about 1min, during the operation, the forced actions of the clutch will cause vehicle vibration, this is a normal situation.

1. Connect the scan tool to the vehicle and access the **VDS**.
2. Select "Fast Track - Learn Value/Adjustment - AT Self-learning - Clutch Pressure/Current Curve Self-learning", and operate as per the instructions on the screen.

Caution: *During clutch pressure/current curve self-learning, to ensure a stable engine torque output, do not shift the A/C between ON/OFF state.*

After self-learning, drive for a while to check the effect of the self-learning. If the vehicle performance is lowered, repeat the self-learning.

Read SubROM

The SubROM is an external memory of the transmission valve, the diagnostic procedure sends the SubROM data to the **EEPROM** of the **TCM**.These data are related to shift fork position, clutch engagement point and solenoid characteristic curve, etc.

After replacement of the following parts, perform the diagnostic procedures for read SubRom:

- Transmission
- **TCM**

Caution: *After replacement of the dual clutch automatic transmission or* **TCM**, *apply the scan tool to read the shift data and valve characteristic data stored in the SubROM of the transmission valve. The original data stored in the* **TCM** *only apply to the original TCM, not apply to the new transmission.*

When performing the diagnostic procedure, the following conditions must be met:

1. The ignition switch is in "ON" position.
2. Turn off the engine.

After operation successful, must let the vehicle power down normally(must not disconnect battery).

The diagnostic procedure shall last for about 5s.

1. Connect the scan tool to the vehicle and access the **VDS**.
2. Select "Fast Track - Learn Value/Adjustment - AT Control Module SubROM Data Reading - Reading SubROM Data (All)", and operate as per the instructions on the screen.

Transmission Sensor Test

The diagnostic procedure can be used to determine if the signal of the transmission sensor is normal by comparing the signal from the **TCM** and the actual feedback from the sensor.

After replacement of the following parts, perform the diagnostic procedures for transmission sensor test.

- Pressure sensor

When performing the diagnostic procedure, the following conditions must be met:

1. The ignition switch is in "ON" position.
2. Engine running
3. The vehicle speed is 0.
4. The vehicle is in P gear.

The diagnostic procedure shall last for about 20s.

1. Connect the scan tool to the vehicle and access the **VDS**.
2. Select "Fast Track - Other - AT Sensor Test", and operate as per the instructions on the screen.

When the operation is completed successfully, the scan tool will prompt its completion.

www.cargeek.ir

www.cargeek.ir

Diagnostic Routine Implementation Condition

	Reset **EEPROM**Data to Default Value	Read SubROM	Clutch Pressure/Current Curve Self-learning
Refresh software	○	○	○
Replacement **TCM**	•	•	○
Replacement new transmission	•	•	○
Replacement old transmission	•	•	○
Replacement pressure sensor	○	○	•
Replacement **TCM** and new transmission	•	•	○
Replacement **TCM** and old transmission	•	•	○
Severe impact occurs during vehicle start、severe impact	○	○	○

www.cargeek.ir

www.cargeek.ir

www.cargeek.ir

occurs during vehicle shifting or the respond is too long			

Note:

- ◯:Unexecute,●:Execute
- The new transmission refers to the new manufacture transmission which we get from the supplier.
- Execute the order of the above routine: sequentially from left to right.

TCM Replacement

After replacement of the **TCM**, perform the following operations:

1. Connect the scan tool to the vehicle and access the **SIPS**.
2. Select "Programming and Coding — **TCM** —Replacement", and operate as per the instructions on the screen.

The procedures for replacement already include procedures for update, configuration and setting (diagnostic procedures for resetting **EEPROM** to default value and reading SubROM data (all)).

If the operation fails during replacement, please operate as per the instructions on the screen. If resetting **EEPROM** to default value or reading SubROM data (all) fails only, apply the **VDS** to reset the **EEPROM** to default value; if the operation is successful, perform the diagnostic procedures for reading SubROM data (all).

Self-adaption Procedures

Caution: *With the use of the transmission, the dual clutch is constantly worn, this will resulting in the decline of the shifting performance. In order to improve the performance of the vehicle, we need do the self-adaption procedures.*

Warm-up

Start the engine, make sure the clutch valve body temperature within the range of 50-90 degrees.

Vehicle torque Map self-adaption operation

- Odd clutch
  1. Shift to 3 gear in M mode, then adjustment the throttle opening slowly until the rotational speed of the engine above to 1500rpm, and then stable running at 10% - 15% of the throttle opening. If the speed is too high you can slow down to guarantee the safety, if the speed is too low, you can operation in accordance with the above method, but you should to ensure the throttle is about 10% - 15%, driving stability for more than 150 seconds in 3 gear.
  2. Operation like step 1, ensure the throttle is about 20%-25%, driving stability for more than 150 seconds in 3 gear.
  3. Operation like step 1, ensure the throttle is about 30%-35%, driving stability for more than 150 seconds in 3 gear.
  4. Operation like step 1, keep the rotational speed more than 2000rpm, ensure the throttle is about 50%-55%, driving stability for more than 150 seconds in 3 gear.

  After the above 4 steps, the odd clutch torque Map adaptive to complete.

- Even clutch
  1. Shift to 4 gear in M mode, then adjustment the throttle opening slowly until the rotational speed of the engine above to 1500rpm, and then stable running at 10% - 15% of the throttle opening. If the speed is too high you can slow down to guarantee the safety, if the speed is too low, you can operation in accordance with the above method, but you should to ensure the throttle is about 10% - 15%, driving stability for more than 150 seconds in 4 gear.
  2. Operation like step 1, ensure the throttle is about 20%-25%, driving stability for more than 150 seconds in 4 gear.
  3. Operation like step 1, ensure the throttle is about 30%-35%, driving stability for more than 150 seconds in 4 gear.
  4. Operation like step 1, keep the rotational speed more than 2000rpm, ensure the throttle is about 50%-55%, driving stability for more than 150 seconds in 4 gear.

  After the above 4 steps, the even clutch torque Map adaptive to complete.

www.cargeek.ir

www.cargeek.ir

Transmission Control Module (TCM) - 7-speed Automatic

Transmission Fast Self-learning

Operation Requiring Fast Self-Learning

Transmission fast self-learning is required by the following operations. The failure of transmission self-learning may lead to worse performance of transmission and corresponding DTC.

1. Transmission Internal Service
2. Transmission Assembly Replacement
3. Electro-Hydraulic Control Assembly And Transmission Control Module (Powerpack & TCM) Service or Replacement
4. Electro-Hydraulic Control Assembly (Powerpack) Service or Replacement
5. TCM Replacement
6. TCM Software Update
7. Operations to improve shift quality

Operation Conditions

If transmission fast self-learning operation meets the following conditions. If the following conditions cannot be met, automatic transmission self-learning process may stops, and the operation shall restarts from the very beginning. In case of the above conditions, the transmission will stops in neutral state until the controller is powered off. Switch off the ignition switch, remove the scan tool, and implement the operation again after waiting for more than 30s. If fast self-learning operation fails for many times, some failure may happen to the transmission hardware. If the transmission oil temperature is beyond 100℃, the transmission self-learning process may stops.

1. Block driving wheels
2. Enable electronic parking system
3. Step the brake pedal
4. The engine is running at idle speed, the speed is 600~800rpm, and the engine is free of speed control.
5. Throttle Position: 0%
6. A/C Off
7. Ignition Voltage: 9~15V
8. Engine Coolant Temperature: 130℃ or lower
9. Transmission oil temperature -10~100℃, if self-learning operation is beyond the temperature range, self-learning will not start.
10. Accumulator pressure cannot be too low (>3000kPa)
11. Shift the gear in the order: P® R® D® P, repeat three times, and finally shift it to P gear to exhaust the air in the clutch.
12. The following DTCs shall not appears:
    a. DTC related to power supply voltage
    b. DTC related to brake pedal
    c. DTC related to engine speed
    d. DTC related to throttle position
    e. DTC in TCM

Operating Steps

Update

If software update and fast self-learning operations are required, operate the following steps:

1. Connect the scan tool to the vehicle and access SIPS.
2. Select programming and coding - TCM (transmission control module) - Refresh, and then operate in accordance with the indications on screen.
3. Perform the following procedures to avoid incorrect diagnosis in the future:
    a. Place the ignition switch in "OFF" position and keep for 30s.
    b. With the engine off, put the ignition switch in "ON" position.
    c. Connect the scan tool to the vehicle and access VDS.
    d. Read the historical DTCs of all control modules and clear them.

update software and fast self-learning operation are included in update. If it reminds of failure in the upgrade process, please operate in accordance with the interface prompts.

Fast Self-learning

If only the fast self-learning operations is required, but not upgrade software, perform the following procedures:

1. Connect the scan tool to the vehicle and access VDS.
2. Select routines - Reset Adaptions - TCM fast learning, and operate in accordance with the prompts on the screen.
3. Perform the following procedures to avoid incorrect diagnosis in the future:
    a. Place the ignition switch in "OFF" position and keep for 30s.
    b. With the engine off, put the ignition switch in "ON" position.
    c. Connect the scan tool to the vehicle and access VDS.
    d. Read the historical DTCs of all control modules and clear them.

If it reminds of failure in the self-learning process, please perform in accordance with the interface prompts.

www.cargeek.ir

www.cargeek.ir

Note: Upon completion of self-learning, if the vehicle still keeps in neutral gear state after restarting the engine, disconnect the battery and wait for 10min. Reconnect the battery, restart the engine, and then the vehicle can be shifted to R gear and D gear.

Troubleshooting

If transmission self-learning operation can not be performed normally, please confirm the following contents:

1. The transmission is 7-speed dry dual clutch automatic transmission.
2. Transmission oil temperature: -10~100℃
3. Engine Coolant Temperature: 130℃ or lower
4. Brake pedal and brake pedal switch operates normally.
5. No activated DTC in TCM
6. Close throttle, the engine speed cannot increase beyond 1500rpm in the initial operation stage.
7. Built-in mode switch can be fitted and work normally.
8. The vehicle does not move or shake sharply.
9. Dual clutch Normal Refit
10. The pressure than accumulator can keep is beyond 3000kPa.

Transmission Accumulator Pressure Relief

7-speed dry clutch automatic transmission supplies the shift control actuator in electro-hydraulic control assembly with oil by adopting the motor to drive the oil pump. The operating pressure of shift control actuator battery assembly is 1200~6502kPa. The technician can quickly decrease high pressure in the system to safety operation level by outputting "Trigger transmission accumulator pressure relief immediately" compulsively. Accumulator pressure system is still in relief state, and it recovers normal until "Trigger transmission accumulator pressure relief immediately" is output compulsively.

Operation Requiring Accumulator Pressure Relief

Accumulator pressure relief operation must be performed before the replacement of electro-hydraulic control assembly or electro-hydraulic control assembly and transmission control module. If the operation is not performed or the operation fails, the electro-hydraulic control assembly may release high pressure oil.

Operation Conditions

If the specified conditions are not met, the transmission accumulator pressure relief procedure will stops the operation, so the whole operation will be performed from the very beginning. In case of such condition, the shift control actuator accumulator assembly may be still in pressurized state. If the transmission oil temperature is beyond 100℃, the transmission accumulator pressure relief procedures may stop.

1. Ignition Voltage: 9 - 15V
2. Vehicle is stationary
3. Transmission is in parking gear (P) or neutral gear (N)
4. Engine speed: 0
5. The following DTCs shall not appears
   a. DTC related to power supply voltage
   b. DTC related to shifting fork
   c. DTC related to pressure sensor
   d. DTC related to P/N gear
   e. DTC related to speed sensor

Operating Steps

1. Connect the scan tool to the vehicle and access VDS.
2. Select TCM - diagnostic - output control - Transmission Accumulator Pressure Relief Trigger, and perform the output operation compulsively.
3. Close the ignition switch, and wait for 3 min.
4. Restart the engine, and finish the pressure relief of transmission accumulator.

Troubleshooting

If the transmission cannot perform accumulator pressure relief operation normally, please confirm the following information:

1. The transmission is 7-speed dry dual clutch automatic transmission.
2. No relevant activated DTC
3. Built-in mode switch is fitted normally and it can operate normally.

www.cargeek.ir

www.cargeek.ir

SCU

SCU Replacement

After replacement of the **SCU**, perform the following operations:

1. Connect the scan tool to the vehicle and access the **SIPS**.
2. Select "Programming and Coding — **SCU** —Replacement", and operate as per the instructions on the screen.

The procedures for replacement already include procedures for update and configuration.

If the operation fails during replacement, please operate as per the instructions on the screen.

www.cargeek.ir

www.cargeek.ir

www.cargeek.ir

TCCM

TCCM Self-test

This function is used to check the **TCCM** and solenoid valve of the torque control. When self-test is enabled, the clutch is activated and the torque can be transferred. The duration of the self-test shall be less than 3s.

When performing the diagnostic procedure, the following conditions must be met:

1. The ignition switch is in "ON" position.
2. Engine is stopped.
3. Clutch slip speed <5 r/min, vehicle speed <5 km/h.

Perform this diagnostic procedure with the scan tool, the operation shall be held for about 3s.

1. Connect the scan tool to the vehicle and access the **VDS**.
2. Select "Routines - other - TCCM On-Demand self Test", and operate as per the instructions on the screen.

TCCM Replacement

After replacement of the **TCCM**, perform the following operations:

1. Connect the scan tool to the vehicle and access the **SIPS**.
2. Select "Programming and Coding — **TCCM** —Replace", and operate as per the instructions on the screen.

The procedures for replacement already include procedures for update and configuration.

If the operation fails during replacement, please operate as per the instructions on the screen.

www.cargeek.ir

www.cargeek.ir

www.cargeek.ir

Air Conditioning System (HVAC)

A/C Servo Motor Self-learning

Perform self-learning for the A/C servo motor under the following situations:

1. Replace the A/C controller.
2. Replace the A/C box assembly.
3. Replace the servo motor of the blend damper/mode damper.

When performing the diagnostic procedure, the following conditions must be met:

1. Place the ignition switch in "ON" position.
2. Turn off the engine.

Use the scan tool to perform the diagnostic procedure:

1. Connect the scan tool to the vehicle and access the **VDS**.
2. Select "Fast Track - Learn Value/Adjustment - A/C Servo Motor Self-learning", and operate as per the instructions on the screen.

A/C Controller Replacement

After replacement of the A/C controller, perform the following operations:

1. Connect the scan tool to the vehicle and access the **SIPS**.
2. Select "Programming and Coding — HVAC —Replacement", and operate as per the instructions on the screen.

The procedures for replacement already include update, configuration and setting (diagnostic procedures for A/C servo motor self-learning).

If the operation fails during replacement, please operate as per the instructions on the screen. If A/C servo motor self-learning fails only, use the **VDS** to repeat the diagnostic procedures.

www.cargeek.ir

www.cargeek.ir

www.cargeek.ir

EPS Module

EPS Module Angle Initialization

When the vehicle power is connected after disconnection, initialize the angle of the **EPS** module.

1. Return the steering wheel.
2. Fully turn the steering wheel to the left.
3. Return the steering wheel.
4. Fully turn the steering wheel to the right.
5. Return the steering wheel.

EPS Module Self-learning

This diagnostic procedure is used for **EPS** self-learning, this provides active return and end stop functions for the steering system.

Perform steering wheel angle self-learning for the **EPS** module under the following situations:

- Replace the steering column assembly.
- Replace the steering gear boot.
- Replace the inner tie rod of the steering gear.
- Replace the outer tie rod of the steering gear.
- Replace the steering gear assembly.

When performing the diagnostic procedure, the following conditions must be met:

1. Start the engine and wait for 5s.
2. Engine speed is above 500r/min.
3. Battery voltage is within 9-16V.
4. **EPS** is in normal state.
5. Vehicle is stationary.
6. The steering wheel is in the center.

Perform the diagnostic procedure:

1. Connect the diagnostic tool to the vehicle and access the **VDS**.
2. Select "Routines - Reset Adaptions- **EPS** Calibration", and operate as the instructions on the screen.

EPS Replacement

After replacement of the **EPS**, perform the following operations:

1. Connect the diagnostic tool to the vehicle and access the **SIPS**.
2. Select "Programming and Coding — **EPS** —Replacement", and operate as the instructions on the screen.

The procedures for replacement already include update, configuration and setting (diagnostic procedures for **EPS** module self-learning).

If the operation fails during replacement, please operate as the instructions on the screen. If **EPS** module self-learning fails only, use the **VDS** to repeat the diagnostic procedures.

www.cargeek.ir

www.cargeek.ir

EPB Module

Parking Brake Cable Full Release

Before removing any part, fully release the parking brake cable under any of the following situations:

- Replace the **EPB** module.
- Replace the parking brake cable.
- Replace the rear brake caliper.
- Replace the rear brake pad.
- Replace the rear brake disc.

Parking Brake Cable Full Release - Recommended Method

VDS of the scan tool is recommended for full release of the parking brake cable. Before use of the **VDS**, ensure the following conditions are met:

1. The ignition switch is in "ON" position.
2. EPB switch is pressed for 5s.
3. Make sure the engine is stationary and the vehicle speed is 0.
4. **EPB** module and relevant actuator are in normal state.

Perform the diagnostic procedure:

1. Connect the scan tool to the vehicle and access the **VDS**.
2. Select "Fast Track - Learn Value/Adjustment - Parking Brake Cable Full Release", and operate as per the instructions on the screen.
3. Fully release the parking brake cable as per the instructions on the screen.

Parking Brake Cable Full Release - Mechanical Method

Generally, this method is not recommended for release of the parking brake cable, it is only used in unexpected situations, for example, low battery and **EPB** failure, when the **EPB** fails, fully release the parking brake cable manually.

1. Remove the rear wheel house liner.
   ☞ Rear Wheel House Liner Remove
2. Turn the white emergency release cover counterclockwise with the socket.

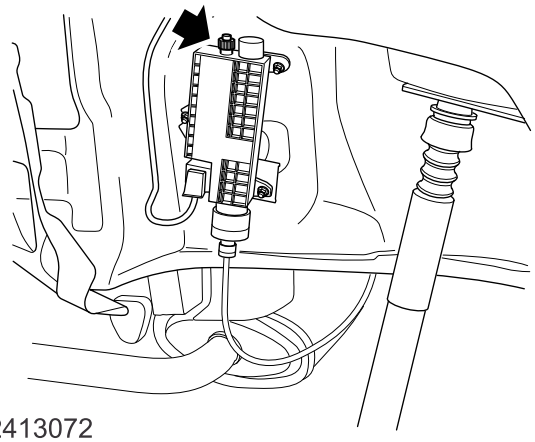

S2413072

3. Insert the Allen hexagon wrench into the hole (appr. 40mm) under the cover, and turn clockwise until the parking brake cable is fully released.

Parking Brake Cable Adjustment

Under any of the following situations, make adjustments and record the original position of the parking brake cable after any part is fitted, otherwise, the **EPB** module cannot work:

- Replace the **EPB**Module
- Replace the parking brake cable.
- Replace the brake caliper housing assembly.
- Replace the brake pad.
- Replace the brake disc.

Perform the diagnostic procedure:

1. Connect the scan tool to the vehicle and access the **VDS**.
2. Select "Fast Track - Learn Value/Adjustment - Parking Brake Cable Adjustment", and operate as per the instructions on the screen.
3. Normal operation of the EPB is achieved by adjusting the parking brake cable as per the instructions on the screen.

EPB Module Replacement

After replacement of the **EPB**, perform the following operations:

1. Connect the scan tool to the vehicle and access the **SIPS**.
2. Select "Programming and Coding — **EPB** —Replacement", and operate as per the instructions on the screen.

The procedures for replacement already include procedures for update, configuration and setting (diagnostic procedures for adjusting parking brake cable).

If the operation fails during replacement, please operate as per the instructions on the screen. If parking brake cable adjustment fails only, use the **VDS** to repeat the diagnostic procedures.

www.cargeek.ir

www.cargeek.ir

Stability Control System (SCS)

SCS Pressure Sensor Self-learning

This function is used to perform self-learning for the **SCS** module after replace the **SCS**.

When performing the diagnostic procedure, the following conditions must be met:

1. Place the ignition switch in "ON" position, but do not start the engine.
2. The vehicle speed is 0.

Perform the diagnostic procedure:

1. Connect the diagnostic tool to the vehicle and access the **VDS**.
2. Select "Routines - Reset Adaptions - **SCS** Pressure Sensor Calibration", and operate as per the instructions on the screen.

Yaw Sensor Self-learning

This function is used to perform self-learning for the yaw sensor after replace the **SCS** module.

When performing the diagnostic procedure, the following conditions must be met:

1. Place the ignition switch in "ON" position, but do not start the engine.
2. The vehicle speed is 0.
3. **SCS** modulator and relevant actuator are in normal state.

Perform the diagnostic procedure:

1. Connect the diagnostic tool to the vehicle and access the **VDS**.
2. Select "Routines - Reset Adaptions - Yaw Sensor Self-learning", and operate as per the instructions on the screen.

ABS/SCS Bleeding

This option can be used to bleed the module and pipe.

When performing the diagnostic procedure, the following conditions must be met:

1. Place the ignition switch in "ON" position.
2. Connect the brake fluid filling/drain machine to the brake fluid reservoir and adjust the refill pressure to 2Bar.

Bleed the **ABS**/**SCS** according to the following instructions:

1. Connect the diagnostic tool to the vehicle and access the **VDS**.
2. Select "Routines - Other - **ABS**/**SCS** Brake Bleeding", and operate as per the instructions on the screen.

If the operation fails, please operate as per the instructions on the screen.

SCS Replacement

After replacement of the **SCS**, perform the following operations:

1. Connect the diagnostic tool to the vehicle and access the **SIPS**.
2. Select "Programming and Coding — **SCS** — Replacement", and operate as per the instructions on the screen.

The procedures for replacement already include procedures for update, configuration and setting (diagnostic procedures for **SCS** pressure sensor/yaw sensor self-learning).

If the operation fails during replacement, please operate as per the instructions on the screen. If **SCS** pressure sensor/yaw sensor self-learning fails only, use the **VDS** to repeat the above procedures.

www.cargeek.ir

www.cargeek.ir

Steering Angle Sensor (SAS)

SAS Reset/Zero Self-learning

SAS Reset/Zero Self-learning shall be performed under the following conditions:

- When operating, removing or replacing the clock spring or combination switch

When performing the diagnostic procedure, the following conditions must be met:

1. Place the ignition switch in "ON" position.
2. When the vehicle speed is 0, the steering wheel returns and stops, check if the front wheel returns to the front.
3. **SAS** module and relevant actuator are in normal state.

Perform the diagnostic procedure:

1. Connect the scan tool to the vehicle and access the **VDS**.
2. Select "Fast Track - Learn Value/Adjustment - SAS Reset Self-learning", and operate as per the instructions on the screen.
3. Select "Fast Track - Learn Value/Adjustment - SAS Zero Self-learning", and operate as per the instructions on the screen.

SAS Replacement

After replacement of the clock spring or combination switch, perform the following operations:

1. Connect the scan tool to the vehicle and access the **SIPS**.
2. Select "Programming and Coding — **SAS** —Replacement", and operate as per the instructions on the screen.
3. Then the system will perform the **SAS** self-learning automatically.

The procedures for replacement already include procedures for update, configuration and setting (SAS Reset/Zero Self-learning).

If the operation fails during replacement, please operate as per the instructions on the screen. If SAS reset/zero self-learning fails only, use the **VDS** to perform SAS reset self-learning, if the operation is successful, then perform the diagnostic procedures for SAS zero self-learning.

www.cargeek.ir

www.cargeek.ir

www.cargeek.ir

BCM

BCM Power Mode Adjustment

After replacement of the **BCM**, to avoid failure of some **BCM** functions, check the power mode of the **BCM** and ensure it is in normal condition.

1. Connect the scan tool to the vehicle and access the **VDS**.
2. Select "Fast Track - PDI - **BCM** Power Mode Adjustment", and shift the power mode of the **BCM** by the instructions on the screen.

BCM Replacement

After replacement of the **BCM**, perform the following operations:

1. Connect the scan tool to the vehicle and access the **SIPS**.
2. Select "Programming and Coding — **BCM** —Replacement", and operate as per the instructions on the screen.

The procedures for replacement already include procedures for update, configuration and setting (anti-theft data matching, key addition and **BCM** power mode adjustment).

If the operation fails during replacement, please operate as per the instructions on the screen. If adjustment of the **BCM** power mode fails only, use the **VDS** to repeat the diagnostic procedures.

Key Addition

1. Connect the scan tool to the vehicle and access the **SIPS**.
2. Select "Programming and Coding — **BCM** — Key Addition", and operate as per the instructions on the screen.
3. Use the key added to start the vehicle and confirm if the key can start, lock or unlock the vehicle.

Key Deletion

1. Connect the scan tool to the vehicle and access the **SIPS**.
2. Select "Programming and Coding — **BCM** — Key Deletion", and operate as per the instructions on the screen.
3. After the key is deleted, read the key information and confirm if the key is successfully deleted.

www.cargeek.ir

www.cargeek.ir

www.cargeek.ir

Communication Module (TBOX)

TBOX Battery Life Calibration

Calibrate the TBOX battery life when the followings occur:

- The communication module battery is replaced.

When performing the diagnostic procedure, the following conditions must be met:

1. The ignition switch is in "ON" position.
2. Engine is stopped.
3. New battery is properly fitted.

Perform the diagnostic procedure:

1. Connect the scan tool to the vehicle and access the **VDS**.
2. Select "Routines - Reset Adaptions - TBOX Battery Calibration", and operate as per the instructions on the screen.

TBOX Replacement

After replacement of the TBOX, perform the following operations:

1. Connect the scan tool to the vehicle and access the **SIPS**.
2. Select "Programming and Coding — TBOX —Replacement", and operate as per the instructions on the screen.

The procedures for replacement already include procedures for configuration and setting (diagnostic procedures for calibrating TBOX battery life).

If the operation fails during replacement, please operate as per the instructions on the screen. If calibration of the TBOX battery life fails only, use the **VDS** to repeat the above diagnostic procedures.

www.cargeek.ir

www.cargeek.ir

www.cargeek.ir

Gateway (GW)

Zero Self-learning of Brake Pedal Position Sensor

Zero self-learning of the brake pedal position sensor shall be carried out under the following situations:

- The GW is replaced.
- The brake pedal position sensor is replaced.

When performing the self-learning, following conditions must be met:

1. The ignition switch is in "ON" position and the engine is off.
2. The brake pedal is not depressed.

Use the scan tool to perform the diagnostic procedure.

1. Connect the scan tool to the vehicle and access the **VDS**.
2. Select "Fast Track - Learn Value/Adjustment - Zero Self-learning of Brake Pedal Position Sensor", and operate as per the instructions on the screen.

GW Power Mode Adjustment

After replacement of the GW, check the power mode of the GW and ensure it is in normal condition.

1. Connect the scan tool to the vehicle and access the **VDS**.
2. Select "Fast Track - PDI - GW Power Mode Adjustment", and shift the power mode of the GW by the instructions on the screen.

GW Replacement

After replacement of the GW, perform the following operations:

1. Connect the scan tool to the vehicle and access the **SIPS**.
2. Select "Programming and Coding — GW —Replacement", and operate as per the instructions on the screen.

The procedures for replacement already include procedures for update, configuration and setting (diagnostic procedures for zero self-learning of the brake pedal position sensor and GW power mode adjustment).

If the operation fails during replacement, please operate as per the instructions on the screen. If zero self-learning of the brake pedal position sensor or GW power mode adjustment fails only, use the **VDS** to repeat the above diagnostic procedures.

www.cargeek.ir

www.cargeek.ir

DHL

DHL Axle Sensor Zero Position Learning

DHL axle sensor zero position learning shall be performed under the following situations:

- DHL module is replaced.
- Axle Sensor is replaced.
- Suspension components (front/rear shock absorber, front lower swing, front subframe, rear suspension spring and rear trailing arm) are replaced.
- DHL function fails or performance deteriorates.

When performing the diagnostic procedure, the following conditions must be met:

1. The ignition switch is in "ON" position.
2. The engine is stationary and the vehicle is on a level ground.
3. DHL module and relevant actuator are in normal state.

Use the diagnostic tool to perform the procedure.

1. Connect the diagnostic tool to the vehicle and access the **VDS**.
2. Select "Routines - Reset Adaptions - DHL Axle Sensor Zero Position Learning", and operate as per the instructions on the screen.

DHL Module Replacement

After replacement of DHL module, perform the following operations:

1. Park the vehicle on a level ground.
2. Connect the diagnostic tool to the vehicle and access the **SIPS**.
3. Select "Programming and Coding — DHL — Replace", and operate as per the instructions on the screen.

The procedures for replacement already include reprogram, configuration and setting (diagnostic procedures for height sensor null voltage self-learning).

If the operation fails during replacement, please operate as per the instructions on the screen. If DHL axle sensor zero position learning fails only, use the **VDS** to repeat the diagnostic procedures for DHL axle sensor zero position learning.

www.cargeek.ir

www.cargeek.ir

www.cargeek.ir

PEPS

PEPS Set Power Mode

After replacement of the PEPS, check the power mode of the PEPS and ensure it is in normal condition.

1. Connect the diagnostic tool to the vehicle and access the **VDS**.
2. Select "Routines - PDI - PEPS Set Power Mode", and shift the power mode of the PEPS by the instructions on the screen.

Caution: *Once the power mode of the PEPS is adjusted to normal mode, it cannot be shifted to other modes. If shift the power mode at this step, the* **VDS** *will display "CAN NOT Change the PEPS to other mode".*

PEPS Replacement

After replacement of the PEPS, perform the following operations:

1. Connect the diagnostic tool to the vehicle and access the **SIPS**.
2. Select "Programming and Coding — PEPS —Replace", and operate as per the instructions on the screen.

The procedures for replacement already include reprogram, configuration and setting (diagnostic procedures for matching anti-theft data and adjusting PEPS power mode).

If the operation fails during replacement, please operate as per the instructions on the screen. If failure of PEPS power mode adjustment occurs only, apply the **VDS** to repeat the operation.

www.cargeek.ir

www.cargeek.ir

www.cargeek.ir

Instrument Pack (IPK)

IPK Replacement

After replacing with a new instrument pack, the following operations must be carried out:

1. Connect the scan tool to the vehicle and access the **SIPS**.
2. Select "Programming and Coding - IPK - Replacement", and operate according to the instructions on the screen.

"Refresh" and "Configuration" are already included in the replacement operation.

If it prompts "Failed" during the replacement, please operate as per the interface prompts.

www.cargeek.ir

www.cargeek.ir

www.cargeek.ir

SDM

SDM Replacement

After replacement of the **SDM**, perform the following operations:

1. Connect the diagnostic tool to the vehicle and access the **SIPS**.
2. Select "Programming and Coding — **SDM** — Replace", and operate as per the instructions on the screen.

The procedures for replacement already include procedures for reprogram, configuration and setting (lock module).

If the operation fails during replacement, please operate as per the instructions on the screen.

www.cargeek.ir

www.cargeek.ir

www.cargeek.ir

Entertainment System Control Module (FICM)

FICM Configuration

After replacing with a new entertainment mainframe, the following operations must be carried out:

1. Connect the scan tool to the vehicle and access the **SIPS**.
2. Select "Programming and Coding - FICM - Configuration", and operate according to the instructions on the screen.

If it prompts "Failed" during the configuration, please operate as per the interface prompts.

www.cargeek.ir

www.cargeek.ir

www.cargeek.ir

PMDC

PMDC Self-learning

Vehicles with intelligent stop/start energy saving system shall be stationary for at least 4hr so that the PMDC can acquire stable and accurate battery status information and meet the operation requirement of the intelligent stop/start energy saving system.

PMDC self-learning shall be carried out under the following situations:

- The battery negative is reconnected after disconnection.
- The battery is replaced.

Caution: *Failure to observe the above requirements can lead to failure of the intelligent stop/start energy saving system before the PMDC can acquire any accurate battery voltage information.*

PMDC Replacement

After replacement of the PMDC, perform the following operations:

1. Connect the scan tool to the vehicle and access the **SIPS**.
2. Select "Programming and Coding — PMDC —Replacement", and operate as per the instructions on the screen.

The procedures for replacement already include procedures for update and configuration.

If the operation fails during replacement, please operate as per the instructions on the screen.

www.cargeek.ir

www.cargeek.ir

www.cargeek.ir

PDC Module

PDC Replacement

After replacement of the **PDC**, perform the following operations:

1. Connect diagnostic tool to the vehicle and access the **SIPS**.
2. Select "Programming and Coding — **PDC** — Replace", and operate as per the instructions on the screen.

The procedures for replacement already include procedures for reprogram and configuration.

If the operation fails during replacement, please operate as per the instructions on the screen.

www.cargeek.ir

www.cargeek.ir

Glossary List

Name	Description
A/C	Air Conditioning
ABS	Anti-lock braking system
AC	Alternating current
ACM	
AGM	Absorbed Glass Mat
ATC	Automatic Temperature Control
AUTO	Automatic
AUX	Auxiliary
AWD	
BCM	Body Controller Module
CAN	Controller area network
CDL	Central Door Locking
CHMSL	Centre High Mounted Stop Lamp
CKP	Crankshaft Position
CMP	Camshaft Position
CO	Carbon Monoxide
CO2	Carbon Dioxide
DC-DC	
DDSP	Driver's Door Switch Pack
DTC	Diagnostic Trouble Code
DTI	Dial Test Indicator
EBD	Electronic Braking-force Distribution
EBS	
ECM	Engine Control Module
ECT	Engine Coolant Temperature
ECU	Electronic Control Unit
EEPROM	Electronic Erasable Programmable Read Only Memory
ELR	Emergency Locking Retractor
EMCD	Electric Magnetic Control Device
EMS	Engine Management System
EPB	Electronic Parking Brake
EPS	

Name	Description
FDU	Final Drive Unit
GPS	Global Positioning System
HC	Hydro Carbons
HFM	Hot film air mass
HHC	Hill Hold Control
HO2S	Heated Oxygen Sensor
HRW	Heated Rear Window
HS	High Speed
HSLA	High Strength Low Alloy
HVAC	Heating, Ventilation and Air Conditioning
HVACM	
Hz	
ICE	In Car Entertainment
ICS	Inflatable Curtain Structure
IPK	Instrument Cluster
ISO	International Organization for Standardization
Km/h	
Km/l	
L	
LCD	Liquid Crystal Display
LED	Light Emitting Diode
LIN	Local Interconnect Network
MAG	Metal Active Gas
MIG	Metal Inert Gas
MIL	Malfunction Indicator Lamp
MLS	Master Light Switch
Min	
NOx	Oxides of Nitrogen
NTC	Negative Temperature Coefficient
OAT	Organic Acid Technology
PCV	Positive Crankcase Ventilation
PDC	Parking Distance Control
PLCD	Permanentmagnetic Linear Contactless Displacement
PTU	Power Transfer Unit
PVC	Polyvinyl Chloride

Name	Description
PWM	Pulse Width Modulation
RON	Research Octane Number
SAE	Society of Automotive Engineers
SAS	
SCS	Stability Control System
SCU	Shifter Control Unit
SDM	
SIPS	SAIC Integrated Program System
SRS	Supplementary Restraint System
TC	Traction Control
TCCM	
TCM	Transmission Control Module
TDC	Top Dead Centre
TMAP	Temperature, Manifold Absolute Pressure
TPMS	Tyre Pressure Monitoring System
TWC	Three-way Catalyst
TXV	Thermostatic Expansion Valve
VDS	Vehicle Diagnostic System
VIN	Vehicle Identification Number
kPa	Kilo Pascal
km	
mL	

www.cargeek.ir